Inhoudsopgave

Bijlage 6 Constructietekeningen en berekeningen mastfundaties

Mastfundatie type A, R3N-TEK-0019
Mastfundatie type B, R3N-TEK-0020
Mastfundatie type C, R3N-TEK-0021
Mastfundatie type D, R3N-TEK-0022
Bepaling belasting mastfundaties, R3N-OWR-0033
Constructieberekening mastfundatie type A, R3N-OWR-0003
Constructieberekening mastfundatie type B, R3N-OWR-0004
Constructieberekening mastfundatie type C, R3N-OWR-0005
Constructieberekening mastfundatie type D, R3N-OWR-0006
Ontwerpberekening paalfundering mastfundaties, R3N-OWR-0008
Nieuwe belastingen steunmasten, R3N-MEM-0012

Bijlage 7 Constructietekening en berekening opstijgpunt

Inrichting OSP bij mast 123, R3N-TEK-0041
Ontwerprapport zettingen OSP's, R3N-OWR-011
Aanzichten opstijgpunten, R3N-TEK-0136
Constructieberekening fundaties OSP, R3N-OWR-0034
Inrichting OSP bij mast YMM74, R3N-TEK-0083

Bijlage 8 Gegevens tijdelijke 150 kV verbinding

Ontwerp omleiding M54 en M53, R3N-OWR-0050
Controle berekeningen M52 en M55, R3N-OWR-0054
Portaal omleiding YMM53-YMM54 grondkabel, R3N-TEK-0184
Tijdelijke omleiding best 150 kV tussen mast 52 en 55, R3N-TEK-0163
Planning tijdelijke lijnen

Bijlage 9 Tekeningen werkterreinen en werkwegen

Definitief ontwerp, algemeen, overzichtstekening, R3N-TEK-0007
Definitief ontwerp, algemeen, overzichtstekening, R3N-TEK-0008
Definitief ontwerp, algemeen, overzichtstekening, R3N-TEK-0009
Definitief ontwerp, algemeen, overzichtstekening, R3N-TEK-0010
Definitief ontwerp, algemeen, overzichtstekening, R3N-TEK-0011
Definitief ontwerp, algemeen, overzichtstekening, R3N-TEK-0012
Definitief ontwerp, algemeen, overzichtstekening, R3N-TEK-0013
Opbouw bouwwegen, R3N-TEK-0029
Aansluiting op bestaande weg, R3N-TEK-0033
Aansluiting op bestaande weg met fietspad R3N-TEK-0034

Bijlage 10 Logistiek plan
R3N-PLA-0004

Bijlage 6

Constructietekeningen en berekeningen mastfundaties

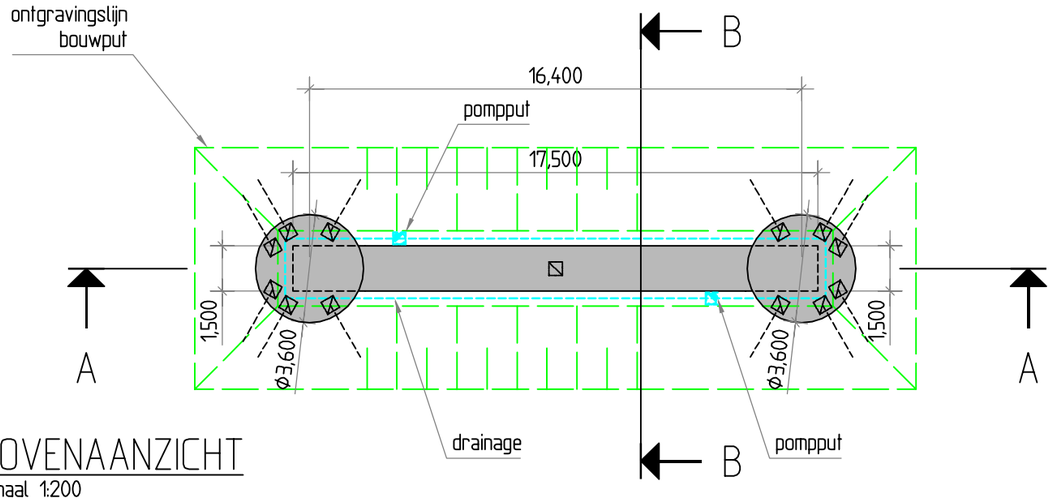

BOVENAANZICHT
Schaal 1:200

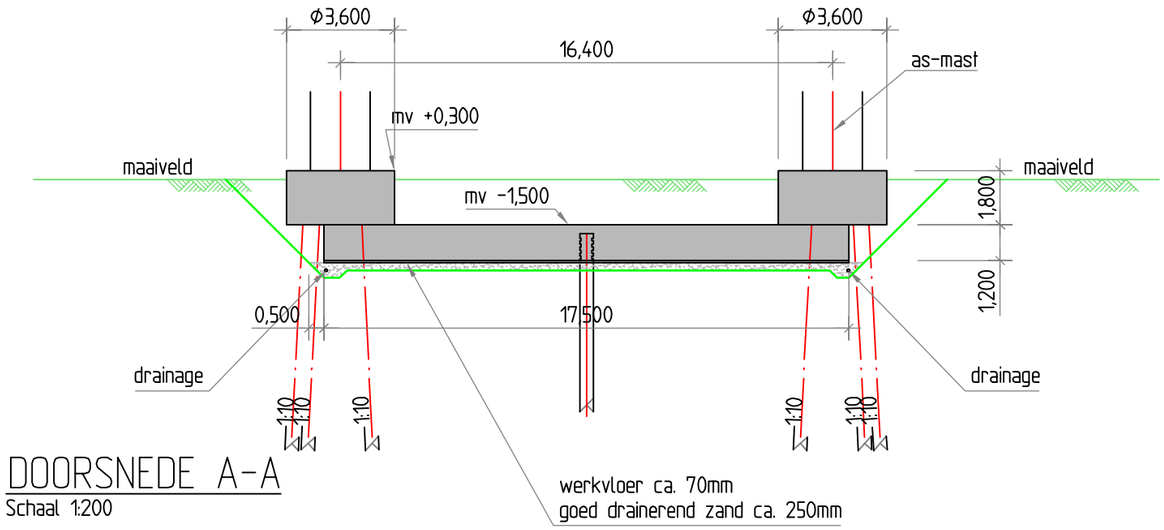

DOORSNEDE A-A
Schaal 1:200

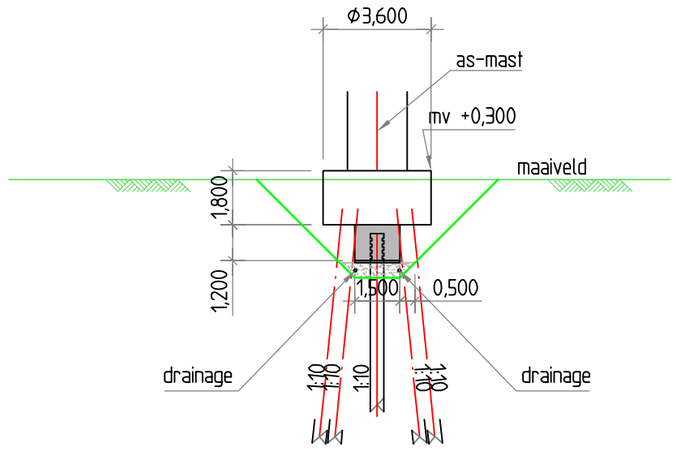

DOORSNEDE B-B
Schaal 1:200

OPMERKINGEN:

Aantal van deze funderingen op verschillende locaties tbv. masten type A = 25 stuks

Toe te passen palen: beton 450mm x 450mm, lengte n.t.b.

Toe te passen betonwerk;
- Betonkwaliteit onderbalk C30/37, montagebalk C35/45, milieuklasse XC2
- Wapeningsstaal kwaliteit B500B

wijzigingen rev 02:
Onderbalk aangepast, ontgravingsprofiel aangepast, werkvloer, zandbed, drainage en pompputten toegevoegd.
Aantal aangepast (mast 126 heeft funderingstype C gekregen).

Combining Knowledge and Experience

bam COFELY FABRICOM GDF SUEZ

Randstad 380kV Noordring

		P. de Jager	A. Hogenboom
		Controleur	Vrijgegeven door
Omschrijving: Definitief Ontwerp Mastfundaties Mastfundatie type A	03		
	02	onderbalk, ontgraving,drain	04-10-2013	R.G.J. Caspers
	01	zie opmerkingen	06-08-2013	R.G.J. Caspers
	Rev.	Wijziging	Datum	Naam
Projekt: Randstad 380kV Noordring	Schaal: 1:100		Formaat: A3	
	Naam: R.G.J. Caspers		Datum: 19-07-2013	

TenneT Taking power further

Tekeningnummer: R3N-TEK-0019 blad 001

AutoCAD filename::

Systnr:

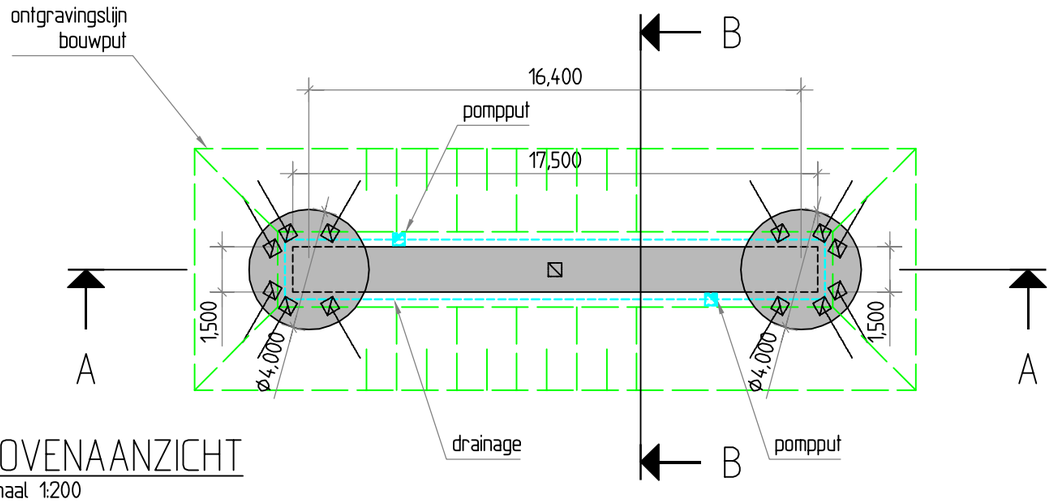

BOVENAANZICHT
Schaal 1:200

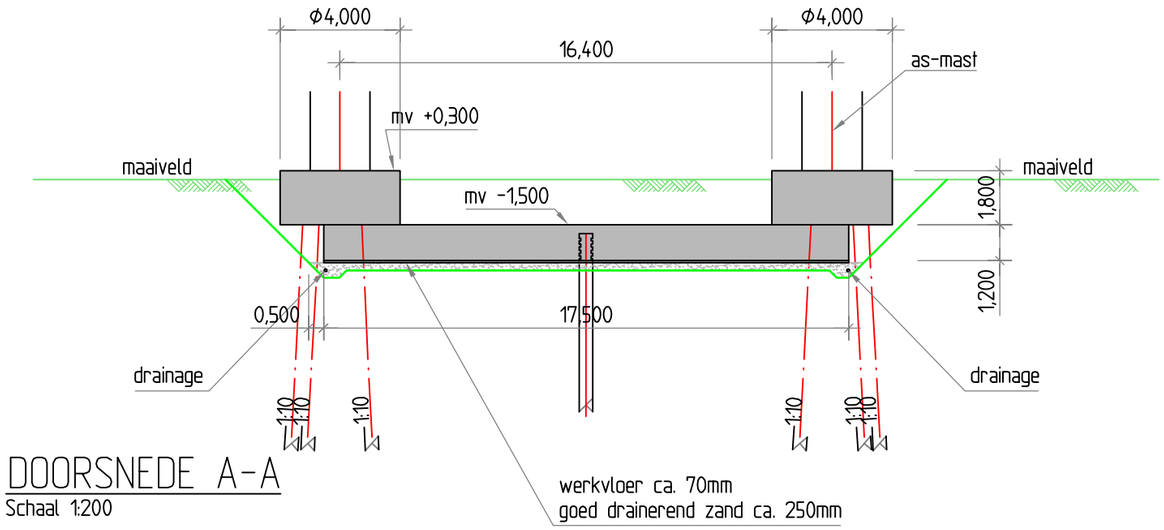

DOORSNEDE A-A
Schaal 1:200

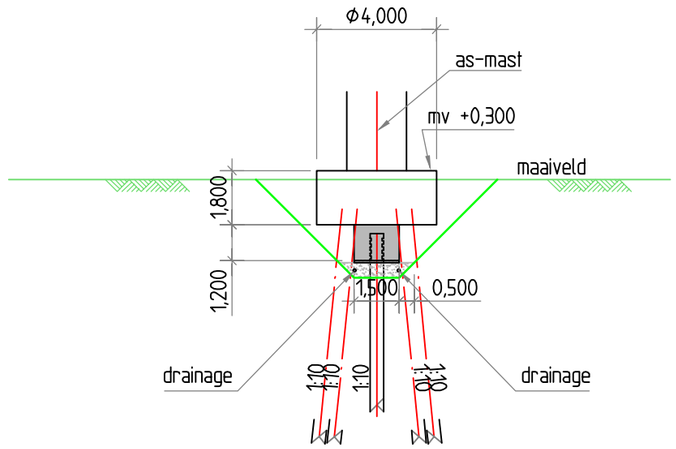

DOORSNEDE B-B
Schaal 1:200

OPMERKINGEN:

Aantal van deze funderingen op verschillende locaties tbv. masten type B = 15 stuks

Toe te passen palen: beton 450mm x 450mm, lengte n.t.b.

Toe te passen betonwerk;
- Betonkwaliteit onderbalk C30/37, montagebalk C35/45, milieuklasse XC2
- Wapeningsstaal kwaliteit B500B

wijzigingen rev 02:
Onderbalk aangepast, ontgravingsprofiel aangepast, werkvloer, zandbed, drainage en pompputten toegevoegd.
Aantal aangepast (mast 118 heeft funderingstype D gekregen).

Combining Knowledge and Experience

bam COFELY FABRICOM GDF SUEZ

Randstad 380kV Noordring

		P. de Jager	A. Hogenboom
		Controleur	Vrijgegeven door
03			
02	onderbalk, ontgraving,drain	04-10-2013	R.G.J. Caspers
01	zie opmerkingen	06-08-2013	R.G.J. Caspers
Rev.	Wijziging	Datum	Naam

Omschrijving: Definitief Ontwerp
Mastfundaties
Mastfundatie type B

Projekt: Randstad 380kV Noordring

Schaal: 1:100 | Formaat: A3
Naam: R.G.J. Caspers | Datum: 19-07-2013

TenneT Taking power further

Tekeningnummer: R3N-TEK-0020 blad 001

AutoCAD filename:: | Systnr:

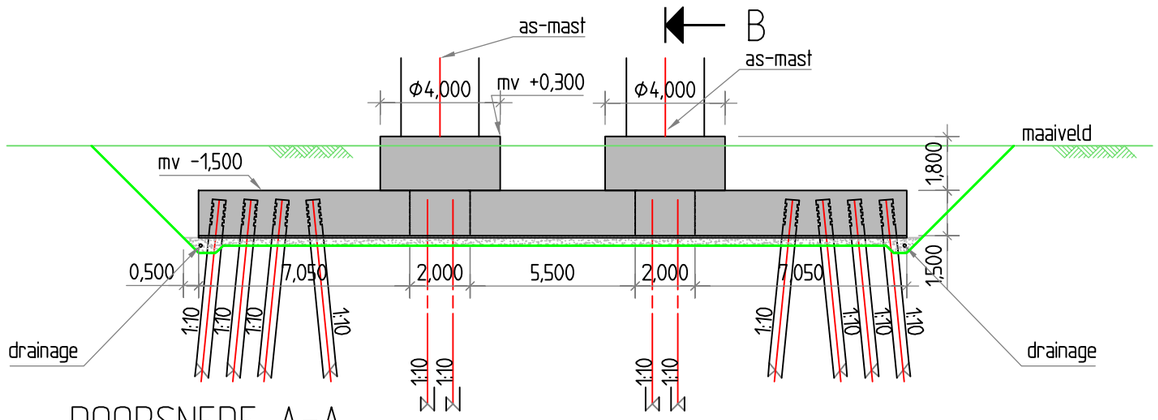

DOORSNEDE A-A

Schaal 1:200

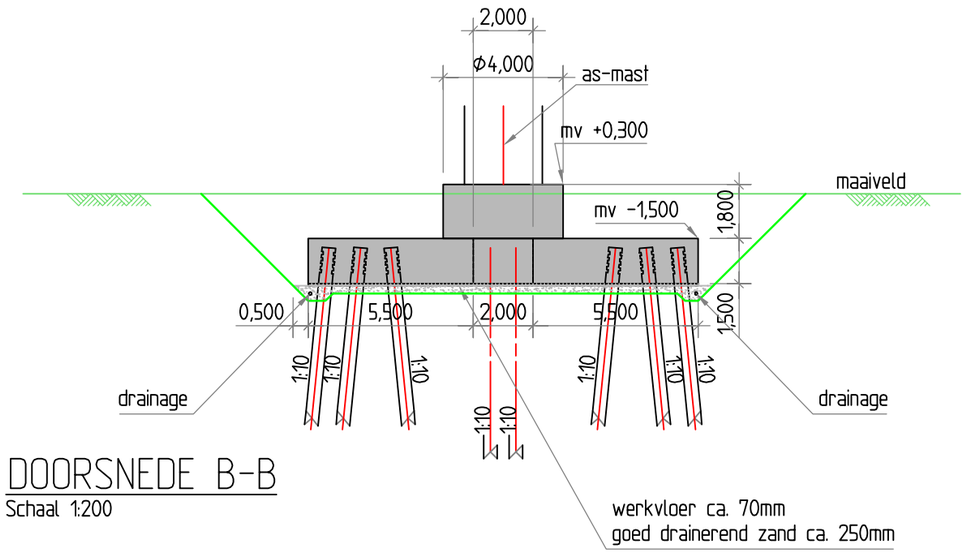

DOORSNEDE B-B

Schaal 1:200

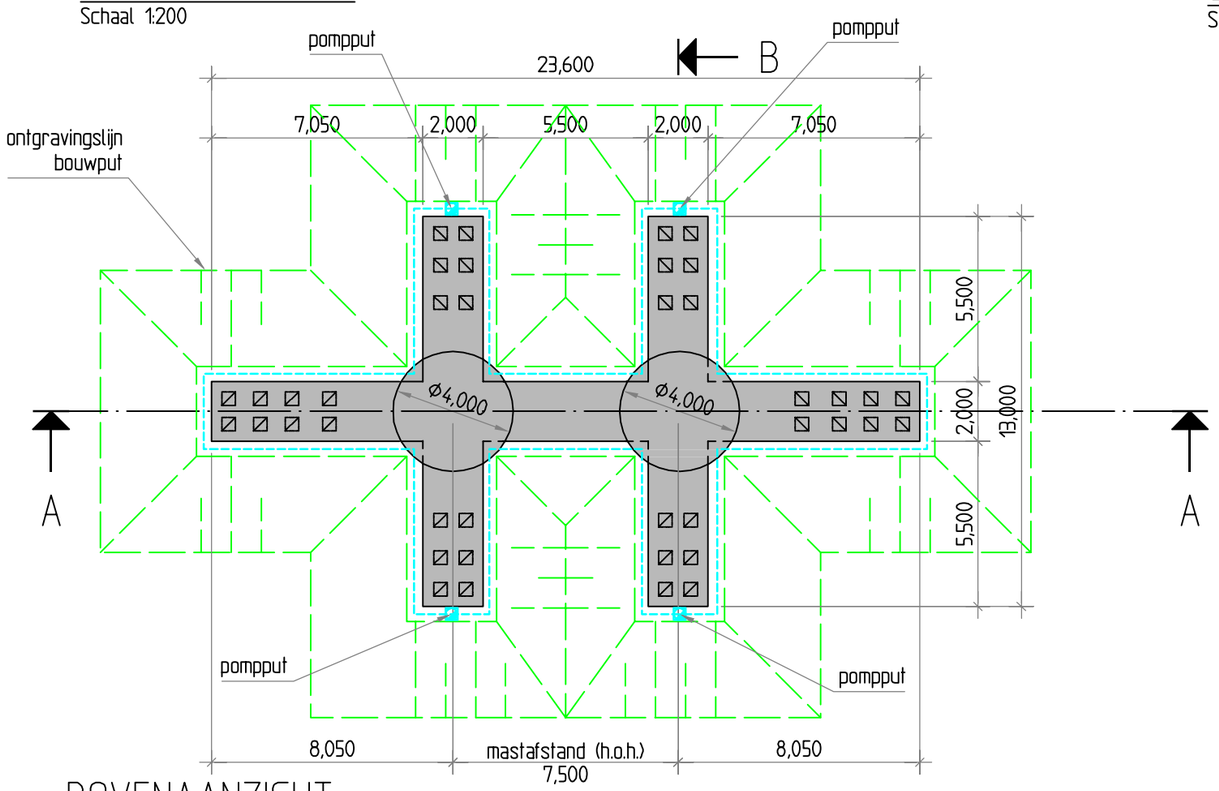

BOVENAANZICHT

Schaal 1:200

OPMERKINGEN:

Aantal van deze funderingen op verschillende locaties tbv. masten type C = 14 stuks

Toe te passen palen: beton 450mm x 450mm, lengte n.t.b.

Toe te passen betonwerk;
- Betonkwaliteit onderbalk C28/35, montagebalk C35/45, milieuklasse XC2
- Wapeningsstaal kwaliteit B500B

wijzigingen rev 02:
Ontgravingsprofiel aangepast, werkvloer, zandbed, drainage en pompputten toegevoegd.
Aantal aangepast (mast 126 heeft nu ook funderingstype C gekregen).

Combining Knowledge and Experience

bam COFELY FABRICOM GDF SUEZ

Randstad 380kV Noordring

		P. de Jager	A. Hogenboom
		Controleur	Vrijgegeven door
03			
02	Ontgravingen en voorz.	04-10-2013	R.G.J. caspers
01	AFW-0050: mastafstand	06-09-2013	R.G.J. Caspers
Rev.	Wijziging	Datum	Naam

Omschrijving: Definitief Ontwerp
Mastfundaties
Mastfundatie type C

Schaal: 1:100 — Formaat: A3

Projekt: Randstad 380kV Noordring — Naam: R.G.J. Caspers — Datum: 19-07-2013

TenneT Taking power further

Tekeningnummer: R3N-TEK-0021 blad 001

AutoCAD filename:: — Systnr:

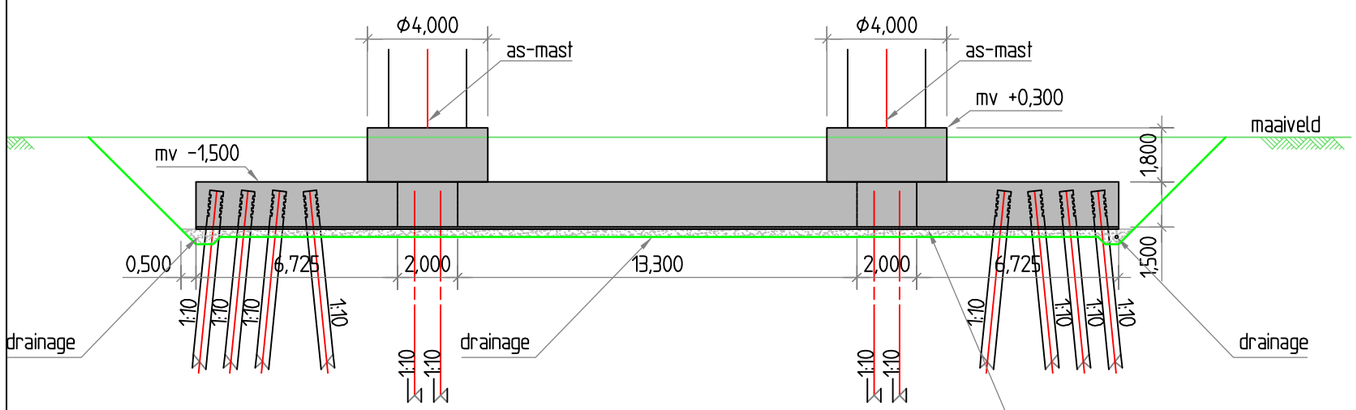

DOORSNEDE A-A
Schaal 1:200

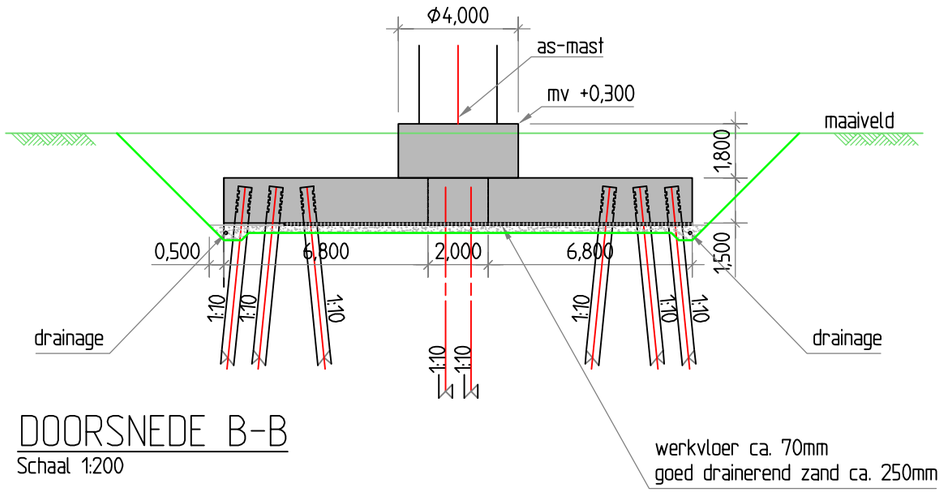

DOORSNEDE B-B
Schaal 1:200

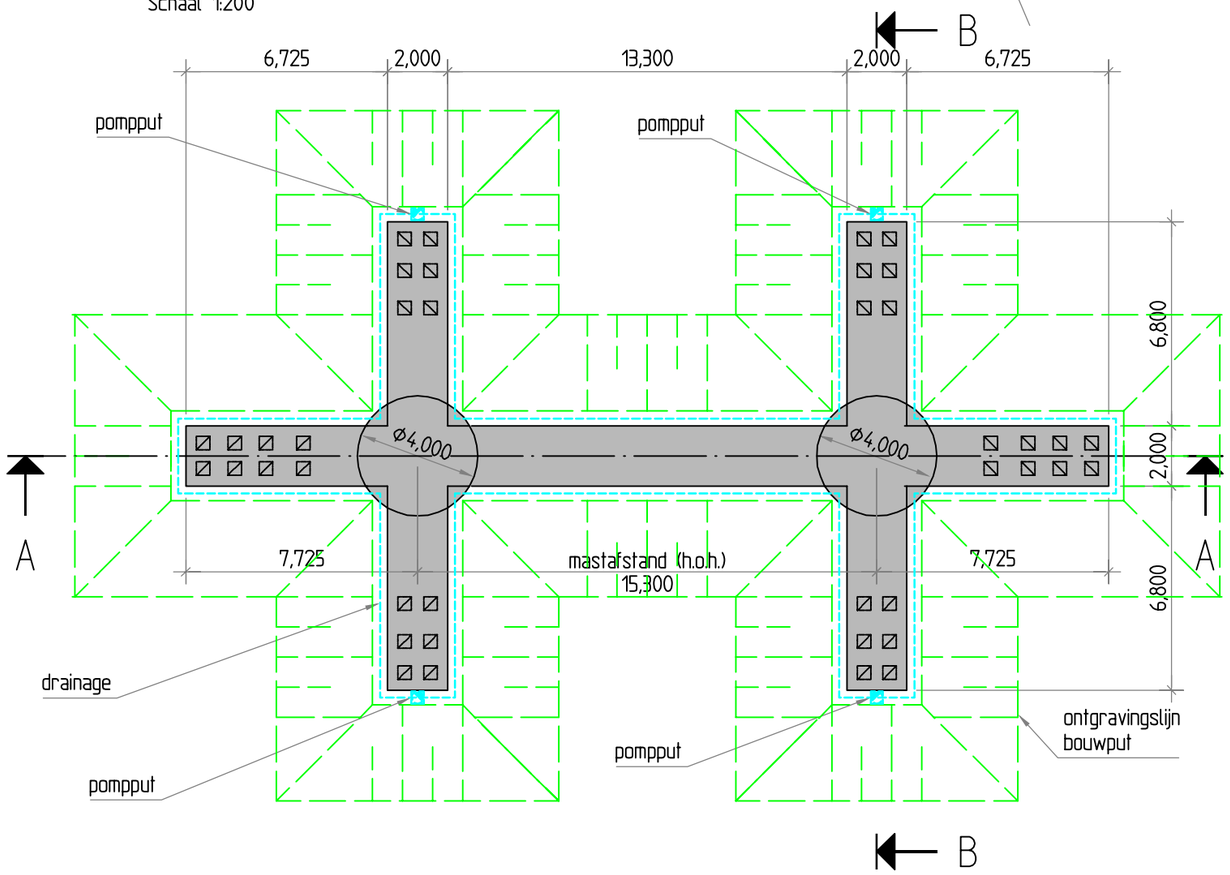

BOVENAANZICHT
Schaal 1:200

OPMERKINGEN:

Aantal van deze funderingen op verschillende locaties tbv. masten type D = 4 stuks

Toe te passen palen: beton 450mm x 450mm, lengte n.t.b.

Toe te passen betonwerk;
- Betonkwaliteit onderbalk C28/35, montagebalk C35/45, milieuklasse XC2
- Wapeningsstaal kwaliteit B500B

wijzigingen rev 02:
Ontgravingsprofiel aangepast, werkvloer, zandbed, drainage en pompputten toegevoegd.
Aantal aangepast (mast 118 heeft nu ook funderingstype D gekregen).

Combining Knowledge and Experience
bam COFELY FABRICOM GDF SUEZ
Randstad 380kV Noordring

		P. de Jager	A. Hogenboom
		Controleur	Vrijgegeven door
03			
02	Ontgravingen en voorz.	04-10-2013	R.G.J. Caspers
01	AFW-0050: mastafstand	06-09-2013	R.G.J. Caspers
Rev.	Wijziging	Datum	Naam

Omschrijving: Definitief Ontwerp
Mastfundaties
Mastfundatie type D

Schaal: 1:100 | Formaat: A3
Naam: R.G.J. Caspers | Datum: 19-07-2013

Projekt: Randstad 380kV Noordring

TenneT Taking power further

Tekeningnummer: R3N-TEK-0022 blad 001

AutoCAD filename:: | Systnr:

Bepaling belasting mastfundaties

Project:
Randstad 380 kV Noordring

Opdrachtgever:
TenneT TSO

Revisie	Datum	Wijzigingen ten opzichte van vorige revisie
00	19-07-2013	Eerste uitgave
01	06-08-2013	Status naar definitief
02	08-04-2014	Bijlagen toegevoegd

Documentnummer: R3N-OWR-0033

Opsteller	*Verificateur*	*Vrijgever*
A.L.A. van Noort Constructeur	Pieter de Jager Ontwerpmanager	Erik Duwel Project Manager

Distributie

Naam	Bedrijf
Extern	
Guido Volman	TenneT TSO
Intern	
Arjan Hogenboom	BAM
Pieter de Jager	BAM
Eric van Rooijen	BAM
David van Loenen	BAM
Rob Bakker	BAM
Erwin ten Cate	BAM
Michael Desmet	Fabricom
Hein Pijnappel	Mott MacDonald

Beheer

De documentbeheerder van de combinatie verzorgt de distributie. Alleen houders van een geregistreerde kopie ontvangen automatisch aanvullingen en/of wijzigingen. Het is de verantwoordelijkheid van de houders het document up to date te houden. De laatste versie is altijd beschikbaar in ThinkProject!

Indien documenten worden geprint, geldt het volgende: een geregistreerde kopie is geldig vanaf de datum van uitgifte. Bij uitgifte van een document met een hoger revisienummer verliest de voorgaande versie automatisch haar geldigheid. Kopiehouders dienen het voorblad van een ongeldige versie te markeren met een diagonale lijn samen met de tekst 'vervallen'.

Neem bij twijfel over de geldende versie contact op met de documentbeheerder.

Inhoudsopgave

1. Inleiding 4
2. Bron van de belastingen 5
3. Overzicht masttypen in het werk 6
4. Verificatie 7
4.1. Afwijkingen in ULS 8
4.2. Afwijkingen in SLS 9
4.3. Conclusie verificatie 11
5. Fundatietype A 12
6. Fundatietype B 13
7. Fundatietype C 14
8. Fundatietype D 16
9. Fundatietype F 17
Bijlagen 18
Bijlage 1 Afleiding belastingen per masttype 19

1. INLEIDING

De komende jaren werken het ministerie van Economische Zaken en TenneT aan de aanleg van een nieuwe 380 kV hoogspanningsverbinding in de Randstad. De nieuwe verbinding stelt de voorziening van elektriciteit in de Randstad veilig.

Het ontwerptracé van de nieuwe Randstad 380 kV verbinding is sinds eind 2008 bekend. De plannen gaan uit van twee ringen, tussen Wateringen en Zoetermeer (de Zuidring) en tussen Zoetermeer en Beverwijk (de Noordring). Eind 2012 heeft Tennet de aanbesteding opgestart voor het gedeelte van de Noordring tussen station Vijfhuizen en Bleiswijk. Het contract is opgedeeld in twee percelen, waarbij de grens ligt bij Zuidelijke Ringvaart. Dit document heeft betrekking op perceel 2 (het zuidelijke gedeelte).

BAM heeft op 8 juli 2013 het contract ondertekend met TenneT voor het ontwerp en realiseren van perceel 2. Het voorliggende document is onderdeel van het ontwerp van de mastfundaties.

De leverancier van de masten, Volker Wessels Telecom, heeft de masten berekend en daarbij ook de belasting op de fundering bepaald. Omdat de masten rond zijn is hierbij alleen naar de maatgevende belasting gekeken.

De verschillende typen masten hebben echter een duidelijk richting waarin de belasting dominant is. In het ontwerp van de mastfundaties is wel rekening gehouden met deze richting afhankelijke belasting. Daarvoor zijn de belastingen opnieuw afgeleid. Dit document bevat de afleiding en de verificatie van deze lasten.

2. BRON VAN DE BELASTINGEN

De belastingen uit de lijnen zijn berekend door KEMA in rapport 74100224-ETD/POL 12-00138 Rev 003 'Design Loads for Wintrack II – R380 BEV-VHZ & VHZ-BEV' 18 juli 2012.

Dit rapport is niet in ons bezit.

Onderdeel van het rapport van KEMA zijn de verschillende bijlagen waarbij telkens per type mast de lasten uit de lijnen zijn gegeven. Deze bijlagen zijn door Volker Wessels Telecom (VWT) in de verschillende berekeningsrapporten opgenomen.

Daarnaast heeft VWT de belasting uit de mast zelf (exclusief last uit lijnen) bepaald. Deze lasten heeft VWT gecombineerd tot de maatgevende belasting op de fundering.

Onderstaand stroomschema geeft de wijze waarop de lasten door VWT (linker zijde schema) en in dit rapport (rechter zijde schema) zijn bepaald. Vervolgens is uit de lasten zoals bepaald in dit rapport een selectie van maatgevende belastingen gemaakt, welke is vergeleken met de maatgevende lasten zoals bepaald door VWT. Deze verificatie is opgenomen in dit rapport.

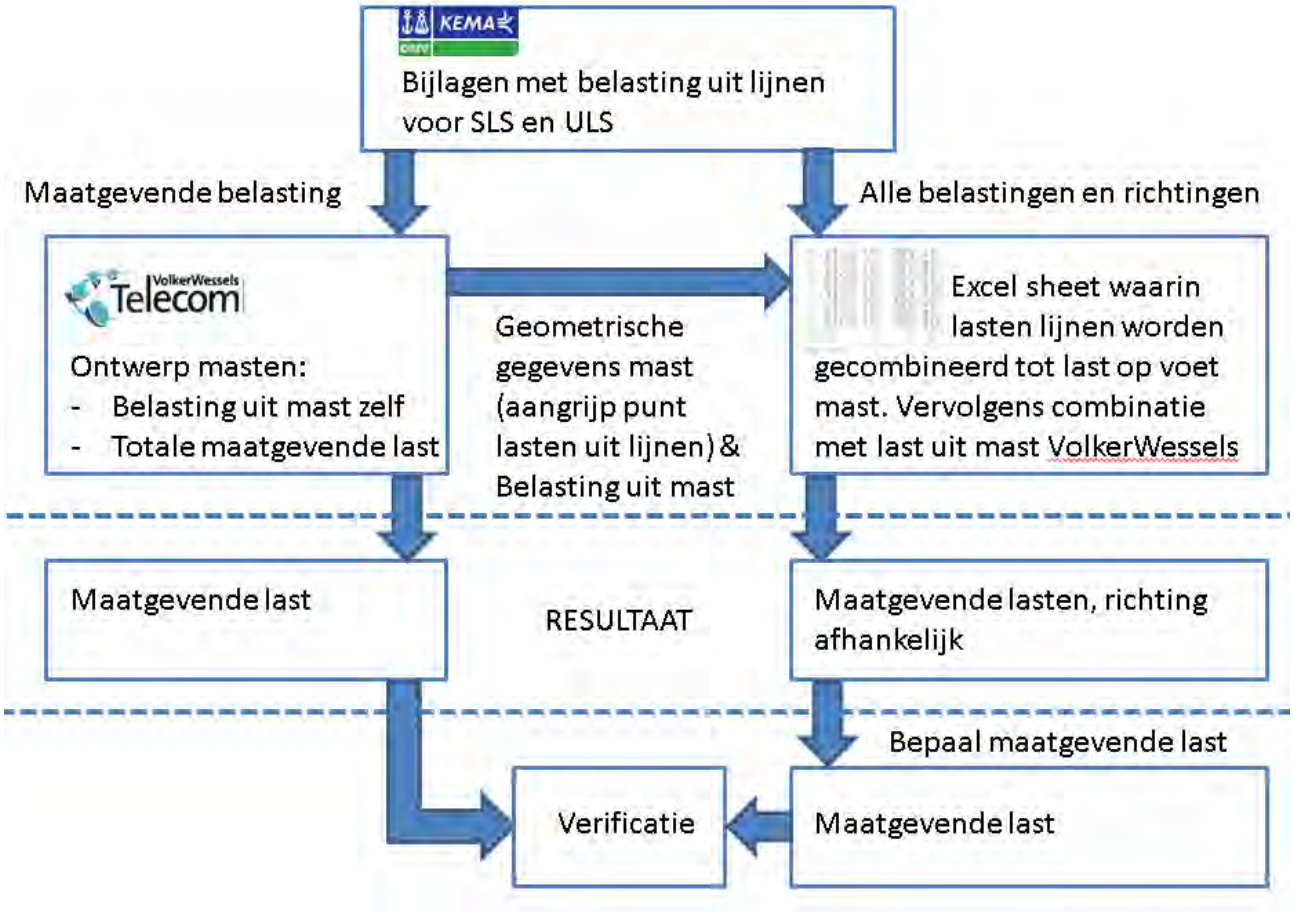

3. OVERZICHT MASTTYPEN IN HET WERK

In onderstaande tabel zijn de verschillende masttypen welke in het werk voorkomen aangegeven. Tijdens de Tenderfase zijn de verschillende berekeningen van de masten arbitrair genummerd (in volgorde van de mastenlijst in bijlage 1 van de vraagspecificatie voor de tender). Omdat in het gewonnen perceel niet meer alle masttypen aanwezig zijn, is de nummeringen van de berekeningen ook niet meer doorlopend. Al naar gelang de grote en richting van de belasting uit de masten en de diameter van de mastvoet zijn een 5-tal fundatietypen bepaald. In Tabel 1 zijn deze ook weergegeven.

Masttype	Berekeningsnummer	Fundatietype
W2S400+5	03	A
W2S350+5	09	A
W2S400A+10	27	A
W4S400Z+5	15	B
W2S400+24	21	B
W2S400+22.5	23	B
W4S400Z+14	24	B
W2H400+5	08	C
W2H400A+5 (mast 74)	08A	C
W2H400+10	17	C
W2H400+10 (mast 82)	17A	C
W2H400+15	22	C
W4H400Z+5	14	D
W4H400ZA+5	25	D
W4H400ZA+10 (Aftakm ast m ast 92)	26	D
W2E350+5	05	F
W2E400	07	F
W2E350	10	F

Tabel 1 Overzicht masttypen met bijhorende berekeningsnummer en fundatietype

4. VERIFICATIE

De waarden zoals door ons berekend zijn vergeleken met de waarden zoals gegeven door VWT in de samenvatting fundatiebelastingen.

Dit resulteert in onderstaande tabel, waarin de verhouding tussen de resultaten van VWT en de door ons afgeleide waarden gegeven zijn.

De kleurcodering is als volgt:
waarde bepaald door VWT > 102% van onze waarde → rood
waarde bepaald door VWT > 99,5% en < 100,5% van onze waarde →groen
waarde bepaald door VWT < 98% van onze waarde → geel

De groene waarden geven dus aan waar de resultaten gelijk zijn.

Geen kleur hebben de waarden met een kleine afwijking en de rode en gele waarden verdienen extra aandacht.

		Verhouding opgegeven waarde t.o.v. afgeleide waarde						
		Kleiner dan 100% is veilig, afgeleide waarde hoger						
		SLS			ULS			
		M	V	N	Mmax	V	Nmax	Nmin
W2S400 + 5	3	99%	99%	86%	100%	100%	83%	100%
W2E350 + 5	5	110%	118%	95%	101%	100%	100%	100%
W2E400	7	110%	111%	95%	101%	100%	100%	100%
W2H400 + 5	8	106%	106%	91%	102%	100%	100%	177%
W2H400 + 5	8a	106%	107%	64%	101%	98%	88%	123%
W2S350 + 5	9	99%	99%	100%	100%	100%	81%	100%
W2E350	10	106%	108%	94%	101%	101%	100%	100%
W4H400Z + 5	14	103%	104%	90%	100%	100%	100%	100%
W4S400Z + 5	15	99%	99%	99%	100%	100%	79%	79%
W2H400 + 10	17	104%	106%	59%	100%	100%	100%	66%
W2H400 + 10	17a	105%	103%	52%	100%	100%	90%	66%
W2S400 + 24	21	98%	98%	62%	100%	100%	83%	70%
W2H400 + 15	22	105%	107%	62%	100%	100%	89%	68%
W2S400 + 22.5	23	99%	100%	63%	100%	100%	84%	70%
W4S400Z + 14	24	100%	100%	67%	93%	100%	80%	54%
W4H400Z + 5 (Afsta	25	146%	142%	91%	103%	104%	85%	78%
W4H400Z +10 (Afst	26	130%	127%	93%	94%	96%	89%	86%
W2S400 + 10 (afs. c	27	101%	103%	58%	102%	104%	82%	52%

Tabel 2 Verhouding tussen resultatenVWT en door ons afgeleide waarden BAM/Cofely Fabricom

4.1. AFWIJKINGEN IN ULS

Over het algemeen zijn de normaalkrachten welke wij afleiden iets hoger dan de waarden zoals bepaald door VWT. Dit komt omdat in de samenvatting van de lasten zoals gegeven door VWT niet de hoogste verticale kracht is aangegeven. Zie bijvoorbeeld onderstaand fragment uit berekening W2S400(+24).
De afwijking is dus geen gevolg van onjuistheden in onze afleiding.

Belasting geval / comb	X - reactie kN	Y - reactie kN	Z - reactie kN	M_x - reactie kNm	M_y - reactie kNm	M_z - reactie kNm
Windrich. 90 graden						
1 - EG mast			757			
2 - Windbelasting mast	163				5841	
3 - Belasting geval 1a	220		135		13718	
4 - Belasting geval 1b	44		167		3256	
5 - Belasting geval 3	137		304		9105	
6 - Belasting geval 4	44		192		3335	
Combinatie 1 : BG1 * 1,2 + BG2 * 1,6 + BG3 * (1,2 eg, 1,5 windbel.)						
	383		892		19559	
Combinatie 2 : BG1 * 1,2 + BG2 * 0,3 + BG4 * (1,2 eg, 0,3 windbel.)						
	75		923		4351	
Combinatie 3 : BG1 * 1,2 + BG2 * 0,45 + BG5 * (1,2 eg, 1,5 windbel.)						
	183		1060		10748	
Combinatie 4 : BG1 * 1,2 + BG2 * 0,3 + BG5 * (1,2 eg, 1,5 windbel.)						
	75		949		4430	

Samenvatting Fundatiebelastingen

	B.C. 1 - SLS γ_{eg}=1.0 , γ_q=1.0		B.C. 2 - ULS γ_{eg}=1.2 , γ_q=1.6		B.C. 3 - ULS γ_{eg}=0.9 , γ_q=1.6	
Voetmoment	12892	kNm	19559	kNm	19559	kNm
Dwarskracht	249	kN	383	kN	383	kN
Verticale kracht	540	kN	892	kN	486	kN

Bij masttype W4H400Z + 5 (Afstap 150kV) en W2S400 + 10 (afs. comp.gl) is voor het moment een hogere waarde gegeven door VWT dan door ons afgeleid.

Bij masttype W4H400Z + 5 (Afstap 150kV komt het verschil doordat het maximale moment optreed in langsrichting van het trace, in een belastingsgeval waarbij de windbelasting haaks op deze richting is. In de opgave van de belasting door VWT worden deze 2 lasten echter bij elkaar geteld, hetgene resulteert in een hogere last.

Bij masttype W2S400 + 10 (afs. comp.gl) is in de samenvatting van de lasten een hoger moment (13349 kNm) gegeven dan dat er door VWT is afgeleid (12988 kNm). De afgeleide waarde van 12988 is zelfs iets lager dan de door ons bepaalde waarde van 13052. Met deze waarde zou het vak zelfs groen kleuren.

Hetzelfde geldt voor de dwarskracht, waar onze berekening op 312 kN uitkomt, de berekening van VWT op 308 kN , maar de opgave 324 kN bedraagt.

Belasting geval / comb	X - reactie kN	Y - reactie kN	Z - reactie kN	M_x - reactie kNm	M_y - reactie kNm	M_t - reactie kNm
Windrich. 90 graden						
1 - EG mast			481			
2 - Windbelasting mast	115	27		814	3428	
3 - Belasting geval 1a	194	71	122	2270	9561	129
4 - Belasting geval 1b	39	47	137	1511	2352	86
5 - Belasting geval 3	117	131	249	4195	6356	239
6 - Belasting geval 4	39	53	159	1689	2431	96
Combinatie 1 : BG1 * 1,2 + BG2 * 1,6 + BG3 * (1,2 eg, 1,5 windbel.)						
	308	98	603	3084	12988	129
Combinatie 2 : BG1 * 1,2 + BG2 * 0,3 + BG4 * (1,2 eg, 0,3 windbel.)						
	60	52	619	1663	2995	86
Combinatie 3 : BG1 * 1,2 + BG2 * 0,45 + BG5 * (1,2 eg, 1,5 windbel.)						
	149	139	731	4424	7320	239
Combinatie 4 : BG1 * 1,2 + BG2 * 0,3 + BG5 * (1,2 eg, 1,5 windbel.)						
	60	58	641	1842	3074	96

Samenvatting Fundatiebelastingen

	B.C. 1 - SLS γ_{eg}=1.0 , γ_q=1.0		B.C. 2 - ULS γ_{eg}=1.2 , γ_q=1.6		B.C. 3 - ULS γ_{eg}=0.9 , γ_q=1.6	
Voetmoment - XY	8897	kNm	13349	kNm	13349	kNm
Dwarskracht - XY	214	kN	324	kN	324	kN
Verticale kracht	348	kN	603	kN	313	kN

4.2. AFWIJKINGEN IN SLS

Uit de tabel volgt dat de waarden van de Steunmasten redelijk overeenkomen, maar onze waarden van de Hoek en Eindmasten zijn aanzienlijk lager.

Uit nadere analyse is het volgende gebleken. Conform NEN-EN 50341 dienen de verschillende belastingen als volgt gecombineerd te worden. (zie onderstaande tabellen) . Zoals te zien is bij combinatie 1b, 3 en 4 slechts een deel van de windbelasting aanwezig. In de bepaling door VWT is dit niet meegenomen, bij elke last is telkens de maximale belasting uit de mast in SLS meegerekend.

Daarnaast is geen rekening gehouden met de richting van de wind, de belasting uit de mast is altijd maximaal meegenomen.

Table 4.2.11/NL.4 - Partial factor and combination factor (serviceability limit state)

Load case and temperature	Value for γ_G, γ_Q, χ_Q and γ_A for the serviceability limit state				
	γ_G	γ_Q or χ_Q			γ_A
Loads	G_K	Q_{PK}	Q_{WK}	Q_{iK}	A_K
1a Wind, 10° C	1,0	-	1,0	-	-
1b Wind, - 20° C	1,0	-	0,2	-	-
3 Wind+ice - 5° C	1,0	-	0,3	1,0	-
4 Construction/maintenance + 5° C	1,0	1,0	0,2	-	-

Table 4.2.11/NL.1 - Partial factor and combination factor (ultimate limit state)

Load case and temperature	Value for γ_G, γ_Q, χ_Q and γ_A for the ultimate limit state				
	γ_G [1]	γ_Q or χ_Q [3]			γ_A
Loads	G_K	Q_{PK}	Q_{WK}	Q_{iK}	A_k
1a Wind, 10° C	1,2	-	1,5	-	-
1b Wind, - 20 °C	1,2	-	0,3	-	-
2 Not relevant	-	-	-	-	-
3 Wind+ice, - 5 °C	1,2		0,45	1,5	
4 Construction/maintenance + 5 °C	1,2	1,5	0,3	-	
5a Torsional, + 10 °C	1,0	1,0 [2]	-	-	1,0
5b Not relevant	-	-	-	-	-
6 Permanent, + 10 °C	1,35	-	-	-	-
7 Special, + 10 °C	1,0	-	-	-	1,0

[1] If permanent loads have a positive effect on the structural forces e.g. uplift forces on foundation $\gamma_G = 0{,}9$.
[2] Only the load at the end of the crossarm, see 4.2.6.
[3] $\chi_Q = \chi_0 - \gamma_Q$, with reference to ENV 1991-1 "Basis of Design".

Indien we bovenstaande uitgangspunten ook op onze afleiding toepassen, dan volgt onderstaande tabel:

		Verhouding opgegeven waarde t.o.v. afgeleide waarde						
		Kleiner dan 100% is veilig, afgeleide waarde hoger						
		SLS			ULS			
		M	V	N	Mmax	V	Nmax	Nmin
W2S400 + 5	3	99%	99%	86%	100%	100%	83%	100%
W2E350 + 5	5	100%	100%	95%	101%	100%	100%	100%
W2E400	7	100%	100%	95%	101%	100%	100%	100%
W2H400 + 5	8	101%	99%	91%	102%	100%	100%	177%
W2H400 + 5	8a	101%	100%	64%	101%	98%	88%	123%
W2S350 + 5	9	99%	99%	84%	100%	100%	81%	100%
W2E350	10	100%	100%	94%	101%	101%	100%	100%
W4H400Z + 5	14	99%	99%	90%	100%	100%	100%	100%
W4S400Z + 5	15	99%	99%	83%	100%	100%	79%	79%
W2H400 + 10	17	99%	99%	59%	100%	100%	100%	66%
W2H400 + 10	17a	100%	100%	60%	100%	100%	90%	66%
W2S400 + 24	21	98%	98%	62%	100%	100%	83%	70%
W2H400 + 15	22	99%	99%	62%	100%	100%	89%	68%
W2S400 + 22.5	23	98%	98%	62%	100%	100%	84%	70%
W4S400Z + 14	24	92%	98%	57%	93%	100%	80%	54%
W4H400Z + 5 (Afsta	25	146%	142%	91%	103%	104%	85%	78%
W4H400Z +10 (Afst	26	130%	127%	93%	94%	96%	89%	86%
W2S400 + 10 (afs. c	27	101%	103%	59%	102%	104%	82%	52%

Tabel 3

Zoals te zien zijn nu vrijwel alle SLS lasten vrijwel gelijk aan de lasten welke VWT heeft afgeleid, behoudens de lasten van mast W4H400Z+5 (afstappunt) en W4H400Z+10 (afstappunt).

Bij deze masten zijn veel speciale belasting gevallen in de ULS aanwezig welke verband houden met installatie. Deze maken geen deel uit van de combinaties in de SLS. Indien de lasten voor SLS zijn bepaald op basis van de resultaten van de ULS geeft dit te hoge waarden voor de SLS.
Voorlopig zullen wij de afgeleide waarden in de SLS vermenigvuldigen met een extra veiligheid van 1,4 opdat de door ons afgeleide waarde overeenkomt met de waarde van de opdrachtgever. Nader onderzoek is gewenst.

4.3. CONCLUSIE VERIFICATIE

De waarden zoals door ons afgeleid komen goed overeen met de door de opdrachtgever verstrekte maximale waarden. Bij de SLS waarden zijn de combinaties zoals gemaakt door de opdrachtgever strenger dan de eisen uit de norm. Wij gaan hier toch de combinaties van de opdrachtgever volgen.

Twee afspanmasten hebben in de SLS een aanzienlijk lagere belasting in onze afleiding dan de waarde van de opdrachtgever. Hier wordt een extra factor van 1,4 op onze waarden toegepast.

5. FUNDATIETYPE A

Samenvatting maatgevende belastingcombinaties:

ULS

Mast	Wind	Loadcase	M_{langs}	M_{dwars}	N	V_{langs}	V_{dwars}
W2S400+5	90 deg	1a	0	14507	565	0	374
W2S400+5	90 deg	3	0	10025	681	0	238
W2S400+5	45 deg	1a	3748	8380	424	113	218
W2S350+5	90 deg	1a	0	11432	419	0	327
W2S350+5	90 deg	3	0	8116	521	0	215
W2S350+5	45 deg	1a	2951	6660	315	98	192
W2S400A+10	0 deg	1a	4809	461	617	158	0
W2S400A+10	0 deg	3	4914	862	737	156	0
W2S400A+10	90 deg	1a	2270	13052	603	71	312

SLS

Type	Wind	Loadcase	M_{langs}	M_{dwars}	N	V_{langs}	V_{dwars}
W2S400+5	0 deg	1b	1805	3943	471	65	109
W2S400+5	45 deg	1a	2765	6731	471	88	176
W2S400+5	90 deg	1a	1805	10053	471	65	257
W2S400+5	90 deg	3	1805	8494	548	65	216
W2S350+5	45 deg	1a	2148	5387	350	75	156
W2S350+5	45 deg	1b	1397	3750	349	55	112
W2S350+5	90 deg	1a	1356	7975	350	54	226
W2S350+5	90 deg	3	1356	6860	417	54	193
W2S400A+10	90 deg	1a	4083	8775	505	133	208
W2S400A+10	90 deg	3	5585	6660	592	180	157

6. FUNDATIETYPE B

ULS

Mast	Wind	Loadcase	M_{langs}	M_{dwars}	N	V_{langs}	V_{dwars}
W4S400Z+5	0 deg	1a	2857	2634	600	102	54
W4S400Z+5	0 deg	3	804	4607	746	29	94
W4S400Z+5	90 deg	1a	0	17967	592	0	463
W4S400Z+5	0 deg	1a	2857	2069	561	102	43
W2S400+24	0 deg	1a	5841	547	921	163	0
W2S400+24	0 deg	3	1643	1036	1075	46	0
W2S400+24	90 deg	1a	0	19609	892	0	383
W2S400+24	0 deg	1a	5841	417	693	163	0
W2S400+22.5	0 deg	1a	5508	1538	878	157	18
W2S400+22.5	0 deg	3	1549	2784	1019	44	31
W2S400+22.5	90 deg	1a	0	21005	859	0	412
W2S400+22.5	0 deg	1a	5508	1201	659	157	14
W4S400Z+14	0 deg	1a	4319	443	777	136	0
W4S400Z+14	0 deg	3	1215	897	944	38	0
W4S400Z+14	90 deg	1a	0	18317	752	0	385
W4S400Z+14	0 deg	1a	4319	284	732	136	0

SLS

Type	Wind	Loadcase	M_{langs}	M_{dwars}	N	V_{langs}	V_{dwars}
W4S400Z+5	0 deg	3	1905	5592	599	68	144
W4S400Z+5	90 deg	1a	1905	12556	494	68	321
W2S400+24	0 deg	1a	3894	4355	769	109	109
W2S400+24	0 deg	3	3894	4689	874	109	109
W2S400+24	90 deg	1a	3894	13158	748	109	255
W2S400+22.5	0 deg	3	3672	5880	828	105	130
W2S400+22.5	45 deg	1a	4314	9532	726	116	197
W2S400+22.5	90 deg	1a	3672	14266	718	105	278
W4S400Z+14	0 deg	3	2879	3560	763	91	91
W4S400Z+14	90 deg	1a	2879	12281	631	91	257

7. FUNDATIETYPE C

ULS

Mast	Wind	Loadcase	M_{langs}	M_{dwars}	N	V_{langs}	V_{dwars}
W2H400+5	90 deg	3	0	37867	1025	0	943
W2H400+5	0 deg	1b	665	16478	682	23	401
W2H400+5	45 deg	1a	14930	27013	682	382	678
W2H400+5	90 deg	1a	21715	14294	385	527	379
W2H400+5	-45 deg	3	26019	14403	398	644	358
W2H400A+5 (mast 74)	0 deg	3	1034	31674	1024	36	784
W2H400A+5 (mast 74)	90 deg	1a	1308	36670	903	53	910
W2H400A+5 (mast 74)	-45 deg	1a	15738	26743	678	415	667
W2H400A+5 (mast 74)	90 deg	1a	21715	14294	385	527	379
W2H400A+5 (mast 74)	-45 deg	3	26019	14403	398	644	358
W2H400+10	0 deg	3	1300	38231	1280	42	829
W2H400+10	90 deg	3	0	45178	1276	0	990
W2H400+10	45 deg	1a	17515	32392	853	404	726
W2H400+10	0 deg	3	1300	26959	1176	42	582
W2H400+10	90 deg	1a	0	33107	1139	0	757
W2H400+10	90 deg	3	0	33678	1172	0	738
W2H400+10	45 deg	1a	8721	25248	855	218	575
W2H400+10 (mast 82)	0 deg	3	4565	34528	1258	152	731
W2H400+10 (mast 82)	90 deg	1a	1574	41927	1127	53	931
W2H400+10 (mast 82)	-45 deg	1a	18211	30577	848	430	682
W2H400+10 (mast 82)	0 deg	3	3002	24614	1167	99	522
W2H400+10 (mast 82)	90 deg	1a	1233	31402	1133	42	712
W2H400+10 (mast 82)	0 deg	1b	21118	11542	847	471	245
W2H400+15	0 deg	3	1560	40126	1413	47	785
W2H400+15	90 deg	1a	0	49086	1264	0	1006
W2H400+15	45 deg	1a	20418	35375	952	433	725
W2H400+15	0 deg	1a	5546	1538	1284	167	18
W2H400+15	0 deg	3	1560	2784	1425	47	31
W2H400+15	90 deg	1a	0	21043	1265	0	422
W2H400+15	0 deg	1a	5546	1201	964	167	14

SLS

Type	Wind	Loadcase	M_{langs}	M_{dwars}	N	V_{langs}	V_{dwars}
W2H400+5	0 deg	1b	2363	20045	757	81	512
W2H400+5	45 deg	1a	8801	23569	757	234	595
W2H400+5	90 deg	3	2363	31280	835	81	794
W2H400+5	-45 deg	1a	8108	23569	757	234	595
W2H400A+5 (mast 74)	0 deg	1b	3321	19716	753	120	499
W2H400A+5 (mast 74)	90 deg	3	4602	30221	821	172	751
W2H400A+5 (mast 74)	-45 deg	1a	8941	23276	753	269	583
W2H400+10	0 deg	3	3081	33806	1046	99	765
W2H400+10	45 deg	1a	10468	28323	949	253	639
W2H400+10	90 deg	1a	3081	32890	946	99	734
W2H400+10	90 deg	3	3081	37539	1043	99	843
W2H400+10 (mast 82)	0 deg	1a	4010	21112	949	130	481
W2H400+10 (mast 82)	45 deg	3	4263	32798	1029	158	726
W2H400+10 (mast 82)	90 deg	1a	4307	31284	941	140	691
W2H400+10 (mast 82)	90 deg	3	5665	34675	1028	186	765
W2H400+10 (mast 82)	-45 deg	1a	10407	26626	945	283	597
W2H400+15	0 deg	3	3697	35947	1157	111	742
W2H400+15	45 deg	1a	12353	30742	1060	276	634
W2H400+15	90 deg	1a	3697	36518	1056	111	745
W2H400+15	90 deg	3	3697	40557	1154	111	830
W2H400+15	-45 deg	1a	11270	30742	1060	276	634

8. FUNDATIETYPE D

ULS

Mast	Wind	Loadcase	M_{langs}	M_{dwars}	N	V_{langs}	V_{dwars}
W4H400Z+5	90 deg	3	0	44494	1133	0	1119
W4H400Z+5	45 deg	1a	16697	31259	749	436	799
W4H400Z+5	45 deg	3	24827	13896	943	780	434
W4H400Z+5	90 deg	1a	-9505	20923	970	-260	683
W4H400Z+5	90 deg	3	-11374	20604	992	-318	663
W4H400ZA+5	90 deg	1a	7658	15619	986	188	421
W4H400ZA+5	90 deg	3	7995	10376	1111	197	264
W4H400ZA+5	-45 deg	1a	9456	9314	986	259	254
W4H400ZA+5	90 deg	1a	5652	10385	986	139	292
W4H400ZA+5	90 deg	3	6162	8221	1014	152	212
W4H400ZA+5	90 deg	3	35215	4924	943	880	130
W4H400ZA+10 (Aftakmast 92)	90 deg	1a	6367	23846	1084	137	570
W4H400ZA+10 (Aftakmast 92)	90 deg	3	43362	18257	1190	951	415
W4H400ZA+10 (Aftakmast 92)	90 deg	1a	3804	12106	971	115	390
W4H400ZA+10 (Aftakmast 92)	90 deg	3	4371	10353	995	132	324
W4H400ZA+10 (Aftakmast 92)	90 deg	3	27696	6071	948	865	191

SLS

Type	Wind	Loadcase	M_{langs}	M_{dwars}	N	V_{langs}	V_{dwars}
W4H400Z+5	0 deg	1b	2098	23277	832	77	603
W4H400Z+5	45 deg	1a	9556	27308	832	259	700
W4H400Z+5	90 deg	3	2098	36338	922	77	931
W4H400ZA+5	0 deg	1b	6590	4113	821	188	126
W4H400ZA+5	45 deg	1b	6564	4721	821	187	141
W4H400ZA+5	90 deg	1a	7976	10768	821	221	289
W4H400ZA+5	90 deg	3	8480	8911	905	234	243
W4H400ZA+5	-45 deg	1b	6065	4732	821	190	141
W4H400ZA+10 (Aftakmast 92)	0 deg	1b	7912	8572	896	205	219
W4H400ZA+10 (Aftakmast 92)	90 deg	1a	7700	16972	902	198	403
W4H400ZA+10 (Aftakmast 92)	90 deg	3	9134	15504	972	231	372
W4H400ZA+10 (Aftakmast 92)	-45 deg	1a	9410	11965	898	253	293

9. FUNDATIETYPE F

ULS

Mast	Wind	Loadcase	M_{langs}	M_{dwars}	N	V_{langs}	V_{dwars}
W2E350+5	90 deg	1a	33589	4631	725	933	225
W2E350+5	90 deg	3	35789	3589	776	985	125
W2E350+5	-45 deg	1b	18592	1449	544	508	43
W2E400	90 deg	1a	34497	5038	819	940	235
W2E400	90 deg	3	37033	3864	877	1007	131
W2E400	45 deg	1b	18118	1547	614	489	45
W2E350	90 deg	1a	28011	3814	616	888	202
W2E350	90 deg	3	30575	2997	667	972	116
W2E350	45 deg	1b	16106	1260	462	507	42

SLS

Type	Wind	Loadcase	M_{langs}	M_{dwars}	N	V_{langs}	V_{dwars}
W2E350+5	0 deg	1b	21038	2595	604	591	91
W2E350+5	90 deg	1a	25824	4981	604	715	154
W2E350+5	90 deg	3	29952	4348	638	838	138
W2E400	0 deg	1b	20659	2688	682	573	91
W2E400	45 deg	1b	20800	2957	682	576	98
W2E400	90 deg	1a	26286	5362	682	715	161
W2E400	90 deg	3	30704	4640	721	847	143
W2E350	45 deg	1b	18150	2296	513	583	86
W2E350	90 deg	1a	21622	4034	513	684	139
W2E350	90 deg	1b	18412	2470	513	591	91
W2E350	90 deg	3	25542	3543	547	821	124

BIJLAGEN

Bijlage 1 Afleiding belastingen per masttype

BIJLAGE 1 AFLEIDING BELASTINGEN PER MASTTYPE

Type	Mast	Ber & bijlage		Wind	Loadcase	M_{langs}	M_{dwars}	N	V_{langs}	V_{dwars}
A	W2S400+5	03-Q	Perm load 1,2	90 deg	1a	0	14507	565	0	374
A	W2S400+5	03-Q	Perm load 1,2	90 deg	3	0	10025	681	0	238
A	W2S400+5	03-Q	Perm load 0,9	45 deg	1a	3748	8380	424	113	218
F	W2E350+5	05-F	Perm load 1,2	90 deg	1a	33589	4631	725	933	225
F	W2E350+5	05-F	Perm load 1,2	90 deg	3	35789	3589	776	985	125
F	W2E350+5	05-F	Perm load 0,9	-45 deg	1b	18592	1449	544	508	43
F	W2E400	07-L	Perm load 1,2	90 deg	1a	34497	5038	819	940	235
F	W2E400	07-L	Perm load 1,2	90 deg	3	37033	3864	877	1007	131
F	W2E400	07-L	Perm load 0,9	45 deg	1b	18118	1547	614	489	45
C	W2H400+5	08-N	Perm load 1,2	90 deg	3	0	37867	1025	0	943
C	W2H400+5	08-N	Perm load 0,9	0 deg	1b	665	16478	682	23	401
C	W2H400+5	08-N	Perm load 0,9	45 deg	1a	14930	27013	682	382	678
C	W2H400+5	08-N1	Perm load 1,2	90 deg	1a	21715	14294	385	527	379
C	W2H400+5	08-N1	Perm load 1,2	-45 deg	3	26019	14403	398	644	358
C	W2H400A+5 (m	08A-AN	Perm load 1,2	0 deg	3	1034	31674	1024	36	784
C	W2H400A+5 (m	08A-AN	Perm load 1,2	90 deg	1a	1308	36670	903	53	910
C	W2H400A+5 (m	08A-AN	Perm load 0,9	-45 deg	1a	15738	26743	678	415	667
C	W2H400A+5 (m	08A-AN1	Perm load 1,2	90 deg	1a	21715	14294	385	527	379
C	W2H400A+5 (m	08A-AN1	Perm load 1,2	-45 deg	3	26019	14403	398	644	358
A	W2S350+5	09-I	Perm load 1,2	90 deg	1a	0	11432	419	0	327
A	W2S350+5	09-I	Perm load 1,2	90 deg	3	0	8116	521	0	215
A	W2S350+5	09-I	Perm load 0,9	45 deg	1a	2951	6660	315	98	192
F	W2E350	10-E	Perm load 1,2	90 deg	1a	28011	3814	616	888	202
F	W2E350	10-E	Perm load 1,2	90 deg	3	30575	2997	667	972	116
F	W2E350	10-E	Perm load 0,9	45 deg	1b	16106	1260	462	507	42
D	W4H400Z+5	14-Y	Perm load 1,2	90 deg	3	0	44494	1133	0	1119
D	W4H400Z+5	14-Y	Perm load 0,9	45 deg	1a	16697	31259	749	436	799
D	W4H400Z+5	14-Y1	Perm load 1,2	45 deg	3	24827	13896	943	780	434
D	W4H400Z+5	14-Y1	Perm load 1,2	90 deg	1a	-9505	20923	970	-260	683
D	W4H400Z+5	14-Y1	Perm load 1,2	90 deg	3	-11374	20604	992	-318	663
B	W4S400Z+5	15-AA	Perm load 1,2	0 deg	1a	2857	2634	600	102	54
B	W4S400Z+5	15-AA	Perm load 1,2	0 deg	3	804	4607	746	29	94
B	W4S400Z+5	15-AA	Perm load 1,2	90 deg	1a	0	17967	592	0	463
B	W4S400Z+5	15-AA	Perm load 0,9	0 deg	1a	2857	2069	561	102	43
C	W2H400+10	17-O	Perm load 1,2	0 deg	3	1300	38231	1280	42	829
C	W2H400+10	17-O	Perm load 1,2	90 deg	3	0	45178	1276	0	990
C	W2H400+10	17-O	Perm load 0,9	45 deg	1a	17515	32392	853	404	726
C	W2H400+10	17-O1	Perm load 1,2	0 deg	3	1300	26959	1176	42	582
C	W2H400+10	17-O1	Perm load 1,2	90 deg	1a	0	33107	1139	0	757
C	W2H400+10	17-O1	Perm load 1,2	90 deg	3	0	33678	1172	0	738
C	W2H400+10	17-O1	Perm load 0,9	45 deg	1a	8721	25248	855	218	575
C	W2H400+10 (m	17A-AM	Perm load 1,2	0 deg	3	4565	34528	1258	152	731
C	W2H400+10 (m	17A-AM	Perm load 1,2	90 deg	1a	1574	41927	1127	53	931
C	W2H400+10 (m	17A-AM	Perm load 0,9	-45 deg	1a	18211	30577	848	430	682
C	W2H400+10 (m	17A-AM1	Perm load 1,2	0 deg	3	3002	24614	1167	99	522
C	W2H400+10 (m	17A-AM1	Perm load 1,2	90 deg	1a	1233	31402	1133	42	712

C	W2H400+10 (m	17A-AM1	Perm load 0,9	0 deg	1b	21118	11542	847	471	245
B	W2S400+24	21-AC	Perm load 1,2	0 deg	1a	5841	547	921	163	0
B	W2S400+24	21-AC	Perm load 1,2	0 deg	3	1643	1036	1075	46	0
B	W2S400+24	21-AC	Perm load 1,2	90 deg	1a	0	19609	892	0	383
B	W2S400+24	21-AC	Perm load 0,9	0 deg	1a	5841	417	693	163	0
C	W2H400+15	22-AE	Perm load 1,2	0 deg	3	1560	40126	1413	47	785
C	W2H400+15	22-AE	Perm load 1,2	90 deg	1a	0	49086	1264	0	1006
C	W2H400+15	22-AE	Perm load 0,9	45 deg	1a	20418	35375	952	433	725
C	W2H400+15	22-AE1	Perm load 1,2	0 deg	1a	5546	1538	1284	167	18
C	W2H400+15	22-AE1	Perm load 1,2	0 deg	3	1560	2784	1425	47	31
C	W2H400+15	22-AE1	Perm load 1,2	90 deg	1a	0	21043	1265	0	422
C	W2H400+15	22-AE1	Perm load 0,9	0 deg	1a	5546	1201	964	167	14
B	W2S400+22.5	23-AF	Perm load 1,2	0 deg	1a	5508	1538	878	157	18
B	W2S400+22.5	23-AF	Perm load 1,2	0 deg	3	1549	2784	1019	44	31
B	W2S400+22.5	23-AF	Perm load 1,2	90 deg	1a	0	21005	859	0	412
B	W2S400+22.5	23-AF	Perm load 0,9	0 deg	1a	5508	1201	659	157	14
B	W4S400Z+14	24-AB	Perm load 1,2	0 deg	1a	4319	443	777	136	0
B	W4S400Z+14	24-AB	Perm load 1,2	0 deg	3	1215	897	944	38	0
B	W4S400Z+14	24-AB	Perm load 1,2	90 deg	1a	0	18317	752	0	385
B	W4S400Z+14	24-AB	Perm load 0,9	0 deg	1a	4319	284	732	136	0
D	W4H400ZA+5	25-AK	Perm load 1,2	90 deg	1a	7658	15619	986	188	421
D	W4H400ZA+5	25-AK	Perm load 1,2	90 deg	3	7995	10376	1111	197	264
D	W4H400ZA+5	25-AK	Perm load 1,2	-45 deg	1a	9456	9314	986	259	254
D	W4H400ZA+5	25-AK1	Perm load 1,2	90 deg	1a	5652	10385	986	139	292
D	W4H400ZA+5	25-AK1	Perm load 1,2	90 deg	3	6162	8221	1014	152	212
D	W4H400ZA+5	25-AK1	Perm load 1,2	90 deg	3	35215	4924	943	880	130
D	W4H400ZA+10 (	26-AL	Perm load 1,2	90 deg	1a	6367	23846	1084	137	570
D	W4H400ZA+10 (	26-AL	Perm load 1,2	90 deg	3	43362	18257	1190	951	415
D	W4H400ZA+10 (	26-AL1	Perm load 1,2	90 deg	1a	3804	12106	971	115	390
D	W4H400ZA+10 (	26-AL1	Perm load 1,2	90 deg	3	4371	10353	995	132	324
D	W4H400ZA+10 (	26-AL1	Perm load 1,2	90 deg	3	27696	6071	948	865	191
A	W2S400A+10	27-AH	Perm load 1,2	0 deg	1a	4809	461	617	158	0
A	W2S400A+10	27-AH	Perm load 1,2	0 deg	3	4914	862	737	156	0
A	W2S400A+10	27-AH	Perm load 1,2	90 deg	1a	2270	13052	603	71	312

ULS

	Mmax	N	Nmin	V
3	14507	681	424	374
5	35789	776	544	985
7	37033	877	614	1007
8	37867	1025	385	943
9	11432	521	315	327
10	30575	667	462	972
14	44494	1133	749	1119
15	17967	746	561	463
17	45178	1280	853	990
21	19609	1075	693	383
22	49086	1425	952	1006
23	21005	1019	659	412

	24	18317	944	732	385
	25	35215	1111	943	880
	26	43362	1190	948	951
	27	13052	737	603	312
17a		41927	1258	847	931
8a		36670	1024	385	910

Type	Mast	Ber & bijlag	Wind	Loadcase		M_{langs}	M_{dwars}	N	V_{langs}	V_{dwars}
W2S400+5	03-Q2	Perm load	0 deg	1b		1805	3943	471	65	109
W2S400+5	03-Q2	Perm load	45 deg	1a		2765	6731	471	88	176
W2S400+5	03-Q2	Perm load	90 deg	1a		1805	10053	471	65	257
W2S400+5	03-Q2	Perm load	90 deg		3	1805	8494	548	65	216
W2E350+5	05-F2	Perm load	0 deg	1b		21038	2595	604	591	91
W2E350+5	05-F2	Perm load	90 deg	1a		25824	4981	604	715	154
W2E350+5	05-F2	Perm load	90 deg		3	29952	4348	638	838	138
W2E400	07-L2	Perm load	0 deg	1b		20659	2688	682	573	91
W2E400	07-L2	Perm load	45 deg	1b		20800	2957	682	576	98
W2E400	07-L2	Perm load	90 deg	1a		26286	5362	682	715	161
W2E400	07-L2	Perm load	90 deg		3	30704	4640	721	847	143
W2H400+5	08-N2	Perm load	0 deg	1b		2363	20045	757	81	512
W2H400+5	08-N2	Perm load	45 deg	1a		8801	23569	757	234	595
W2H400+5	08-N2	Perm load	90 deg		3	2363	31280	835	81	794
W2H400+5	08-N2	Perm load	-45 deg	1a		8108	23569	757	234	595
W2H400A+	08-AN2	Perm load	0 deg	1b		3321	19716	753	120	499
W2H400A+	08-AN2	Perm load	90 deg		3	4602	30221	821	172	751
W2H400A+	08-AN2	Perm load	-45 deg	1a		8941	23276	753	269	583
W2S350+5	09-I2	Perm load	45 deg	1a		2148	5387	350	75	156
W2S350+5	09-I2	Perm load	45 deg	1b		1397	3750	349	55	112
W2S350+5	09-I2	Perm load	90 deg	1a		1356	7975	350	54	226
W2S350+5	09-I2	Perm load	90 deg		3	1356	6860	417	54	193
W2E350	10-E2	Perm load	45 deg	1b		18150	2296	513	583	86
W2E350	10-E2	Perm load	90 deg	1a		21622	4034	513	684	139
W2E350	10-E2	Perm load	90 deg	1b		18412	2470	513	591	91
W2E350	10-E2	Perm load	90 deg		3	25542	3543	547	821	124
W4H400Z+	14-Y2	Perm load	0 deg	1b		2098	23277	832	77	603
W4H400Z+	14-Y2	Perm load	45 deg	1a		9556	27308	832	259	700
W4H400Z+	14-Y2	Perm load	90 deg		3	2098	36338	922	77	931
W4S400Z+!	15-AA2	Perm load	0 deg		3	1905	5592	599	68	144
W4S400Z+!	15-AA2	Perm load	90 deg	1a		1905	12556	494	68	321
W2H400+1	17-O2	Perm load	0 deg		3	3081	33806	1046	99	765
W2H400+1	17-O2	Perm load	45 deg	1a		10468	28323	949	253	639
W2H400+1	17-O2	Perm load	90 deg	1a		3081	32890	946	99	734
W2H400+1	17-O2	Perm load	90 deg		3	3081	37539	1043	99	843
W2H400+1	17A-AM2	Perm load	0 deg	1a		4010	21112	949	130	481
W2H400+1	17A-AM2	Perm load	45 deg		3	4263	32798	1029	158	726
W2H400+1	17A-AM2	Perm load	90 deg	1a		4307	31284	941	140	691
W2H400+1	17A-AM2	Perm load	90 deg		3	5665	34675	1028	186	765
W2H400+1	17A-AM2	Perm load	-45 deg	1a		10407	26626	945	283	597
W2S400+2	21-AC2	Perm load	0 deg	1a		3894	4355	769	109	109
W2S400+2	21-AC2	Perm load	0 deg		3	3894	4689	874	109	109
W2S400+2	21-AC2	Perm load	90 deg	1a		3894	13158	748	109	255
W2H400+1	22-AE2	Perm load	0 deg		3	3697	35947	1157	111	742
W2H400+1	22-AE2	Perm load	45 deg	1a		12353	30742	1060	276	634
W2H400+1	22-AE2	Perm load	90 deg	1a		3697	36518	1056	111	745

W2H400+1	22-AE2	Perm load	90 deg		3	3697	40557	1154	111	830
W2H400+1	22-AE2	Perm load	-45 deg	1a		11270	30742	1060	276	634
W2S400+2	23-AF2	Perm load	0 deg		3	3672	5880	828	105	130
W2S400+2	23-AF2	Perm load	45 deg	1a		4314	9532	726	116	197
W2S400+2	23-AF2	Perm load	90 deg	1a		3672	14266	718	105	278
W4S400Z+	24-AB2	Perm load	0 deg		3	2879	3560	763	91	91
W4S400Z+	24-AB2	Perm load	90 deg	1a		2879	12281	631	91	257
W4H400ZA	25-AK2	Perm load	0 deg	1b		6590	4113	821	188	126
W4H400ZA	25-AK2	Perm load	45 deg	1b		6564	4721	821	187	141
W4H400ZA	25-AK2	Perm load	90 deg	1a		7976	10768	821	221	289
W4H400ZA	25-AK2	Perm load	90 deg		3	8480	8911	905	234	243
W4H400ZA	25-AK2	Perm load	-45 deg	1b		6065	4732	821	190	141
W4H400ZA	26-AL2	Perm load	0 deg	1b		7912	8572	896	205	219
W4H400ZA	26-AL2	Perm load	90 deg	1a		7700	16972	902	198	403
W4H400ZA	26-AL2	Perm load	90 deg		3	9134	15504	972	231	372
W4H400ZA	26-AL2	Perm load	-45 deg	1a		9410	11965	898	253	293
W2S400A+	27-AH2	Perm load	90 deg	1a		4083	8775	505	133	208
W2S400A+	27-AH2	Perm load	90 deg		3	5585	6660	592	180	157

SLS

Berekening	M	Nmax	Nmin	V
3	10053	548	471	257
5	29952	638	604	838
7	30704	721	682	847
8	31280	835	757	794
9	7975	417	349	226
10	25542	547	513	821
14	36338	922	832	931
15	12556	599	494	321
17	37539	1046	946	843
21	13158	874	748	255
22	40557	1157	1056	830
23	14266	828	718	278
24	12281	763	631	257
25	10768	905	821	289
26	16972	972	896	403
27	8775	592	505	208
17a	34675	1029	941	765
8a	30221	821	753	751

Deze sheet controelerd de resultaten van de spreadsheet met de resultaten zoal sin de berekeningen samengevat.

SLS

Voorbeeld opgave belasting in berekening, uit berekening 1

Samenvatting Fundatiebelastingen

	B.C. 1 - SLS γ_m=1.0 ; γ_f=1.0		B.C. 2 - ULS γ_m=1.2 ; γ_f=1.6		B.C. 3 - ULS γ_m=0.9 ; γ_f=1.6	
Voetmoment	27327	kNm	33406	kNm	33406	kNm
Dwarskracht	771	kN	927	kN	927	kN
Verticale kracht	631	kN	873	kN	568	kN

	Berekening VolkerWessel Telecom								
	B.C. 1 - SLS			B.C. 2 - ULS			B.C. 3 - ULS		
Berekening	Voetmoment	Dwarskracht	verticale kracht	Voetmoment	Dwarskracht	verticale kracht	Voetmoment	Dwarskracht	verticale kracht
3	9979	253	471	14554	374	565	14554	374	424
5	29966	836	604	36006	990	776	36006	990	544
7	30727	846	683	37268	1012	877	37268	1012	614
8	31577	789	757	38516	943	1025	38516	943	681
8a	30614	752	526	37152	892	903	37152	892	473
9	7924	223	350	11472	328	420	11472	328	315
10	25558	821	513	30758	977	666	30758	977	462
14	36094	926	832	44494	1119	1134	44494	1119	749
15	12395	317	494	17917	463	591	17917	463	445
17	37292	837	622	45178	990	1276	45178	990	560
17a	34560	765	618	41965	933	1127	41965	933	556
21	12892	249	540	19559	383	892	19559	383	486
22	40271	823	720	49086	1006	1264	49086	1006	648
23	13982	271	514	20915	412	859	20915	412	463
24	11307	251	436	17113	385	752	17113	385	392
25	15743	410	822	36241	911	943	36241	911	740
26	22100	514	902	40567	909	1058	40567	909	812
27	8897	214	348	13349	324	603	13349	324	313

	Samenvatting waarden VolkerWessel telecom								
	SLS				ULS				
Berekening	Nmin	Nmax	Vmax	Mmax	Nmin	Nmax	Vmax	Mmax	
3	471	= N min	253	9979	424	565	374	14554	
5	604	= N min	836	29966	544	776	990	36006	
7	683	= N min	846	30727	614	877	1012	37268	
8	757	= N min	789	31577	681	1025	943	38516	
8a	526	= N min	752	30614	473	903	892	37152	8a
9	350	= N min	223	7924	315	420	328	11472	
10	513	= N min	821	25558	462	666	977	30758	
14	832	= N min	926	36094	749	1134	1119	44494	
15	494	= N min	317	12395	445	591	463	17917	
17	622	= N min	837	37292	560	1276	990	45178	
17a	618	= N min	765	34560	556	1127	933	41965	17a
21	540	= N min	249	12892	486	892	383	19559	
22	720	= N min	823	40271	648	1264	1006	49086	
23	514	= N min	271	13982	463	859	412	20915	
24	436	= N min	251	11307	392	752	385	17113	
25	822	= N min	410	15743	740	943	911	36241	
26	902	= N min	514	22100	812	1058	909	40567	
27	348	= N min	214	8897	313	603	324	13349	

	SPREADSHHET							
	SLS			ULS				
	M	V	N	Mmax	V	Nmax	Nmin	
3	10053	257	548	14507	374	681	424	**W2S400 + 5**
5	29952	838	638	35789	985	776	544	W2E350 + 5
7	30704	847	721	37033	1007	877	614	W2E400
8	31280	794	835	37867	943	1025	385	W2H400 + 5
	30221	751	821	36670	910	1024	385	W2H400 + 5
9	7975	226	417	11432	327	521	315	W2S350 + 5
10	25542	821	547	30575	972	667	462	W2E350
14	36338	931	922	44494	1119	1133	749	W4H400Z + 5
15	12556	321	599	17967	463	746	561	W4S400Z + 5
17	37539	843	1046	45178	990	1280	853	W2H400 + 10
	34675	765	1029	41927	931	1258	847	W2H400 + 10
21	13158	255	874	19609	383	1075	693	W2S400 + 24
22	40557	830	1157	49086	1006	1425	952	W2H400 + 15
23	14266	278	828	21005	412	1019	659	W2S400 + 22.5
24	12281	257	763	18317	385	944	732	W4S400Z + 14
25	10768	289	905	35215	880	1111	943	W4H400Z + 5 (Afsta
26	16972	403	972	43362	951	1190	948	W4H400Z +10 (Afsta
27	8775	208	592	13052	312	737	603	W2S400 + 10 (afs. cc

Verhouding opgegeven waarde t.o.v. afgeleide waarde

	Kleiner dan 100% is veilig, afgeleide waarde hoger											
	SLS			ULS								
	M	V	N	Mmax	V	Nmax	Nmin					
3	99%	99%	86%	100%	100%	83%	100%	W2S400 + !	A		3	-116
5	100%	100%	95%	101%	100%	100%	100%	W2E350 + :	E		5	0
7	100%	100%	95%	101%	100%	100%	100%	W2E400	E		7	0
8	101%	99%	91%	102%	100%	100%	177%	W2H400 +	C		8	0
8a	101%	100%	64%	101%	98%	88%	123%	W2H400 +	C		8A	-121
9	99%	99%	84%	100%	100%	81%	100%	W2S350 + !	A		9	-101
10	100%	100%	94%	101%	101%	100%	100%	W2E350	E		10	-1
14	99%	99%	90%	100%	100%	100%	100%	W4H400Z -	D		14	1
15	99%	99%	83%	100%	100%	79%	79%	W4S400Z +	B		15	-155
17	99%	99%	59%	100%	100%	100%	66%	W2H400 +	C		17	-4
17a	100%	100%	60%	100%	100%	90%	66%	W2H400 +	C	17A		-131
21	98%	98%	62%	100%	100%	83%	70%	W2S400 + :	B		21	-183
22	99%	99%	62%	100%	100%	89%	68%	W2H400 +	C		22	-161
23	98%	98%	62%	100%	100%	84%	70%	W2S400 + :	B		23	-160
24	92%	98%	57%	93%	100%	80%	54%	W4S400Z +	B		24	-192
25	146%	142%	91%	103%	104%	85%	78%	W4H400Z -	D		25	-168
26	130%	127%	93%	94%	96%	89%	86%	W4H400Z -	D		26	-132
27	101%	103%	59%	102%	104%	82%	52%	W2S400 + :	A		27	-134

Toelichting

Links staan de belastingen zoals opgegeven, in deze belasting is geen rekening gehouden met de richting van de last

Vervolgens zijn deze belastingen in de tabel ernaats samengevat opdat waarden worden verkregen welke vergelijkbaar zijn met de waarden die deze spreadsheet berekend

Als laatste zijn de opgegeven waarden vergeleken met de waardenzoals berekend doro de spreadsheet.

W2S400+5 | 03-Q

Hoogte mast				57	m	
Hoogte onderste stroomdraad (F3)				31	m	
				Hoogte		Excentriciteit ophanging t.o.v. hart mast
Bliksemdraad = GW / OPGW	H_{mast} -	0,7	m =	56,3	m	-1,459 m
1e traverse - 380C1F1	F2 +	10	m =	51	m	4,41 m
2e traverse - 380C1F2	F2 +	10	m =	41	m	4,41 m
3e traverse - 380C1F3				31	m	4,41 m
Passieve lijn = Comp C.	F3 -	4	m =	27	m	-1,825 m

Uit mast (incl belastingsfactoren) N [kN]	V [kN]	M [kNm]	Uit lijnen (incl belastingsfactoren) Nmin [kN]	Nmax [kN]	Vmax [kN]	Mlangs;ma [kNm]	Mdwars;max [kNm]
449	98	2707	87	232	276	1834	11800

		Belastingen uit lijnen	M_{langs}	M_{dwars}	N	V_{langs}	V_{dwars}	Belasting uit mast N	V	M	regel			Loadcase	Totaal M_{langs}	M_{dwars}	N	V_{langs}	V_{dwars}	Totaal moment		
Perm load 1,2	0 deg	1a	0	2221	116	0	44	449	98	2707	1	Perm load 1,2	0 deg	1a	2707	2221	565	98	44	3501,362	1	
		1b	0	2468	116	0	50	449	18	508	2	Perm load 1,2	0 deg	1b	508	2468	565	18	50	2519,824	2	
		3	0	3843	232	0	79	449	28	761	3	Perm load 1,2	0 deg	3	761	3843	681	28	79	3917,717	3	
		4	0	2591	139	0	52	449	18	508	4	Perm load 1,2	0 deg	4	508	2591	588	18	52	2639,889	4	
		6	0	2435	130	0	48				5	Perm load 1,2	0 deg	6							5	
											6										6	
	45 deg	1a	-1530	6812	116	-37	155	449	98	2707	7	Perm load 1,2	45 deg	1a	3445	8726	565	106	224	9381,266	7	
		1b	-90	3317	116	-2	71	449	18	508	8	Perm load 1,2	45 deg	1b	449	3676	565	15	84	3702,86	8	
		3	-334	6478	232	-8	143	449	28	761	9	Perm load 1,2	45 deg	3	872	7016	681	27	162	7070,149	9	
		4	-69	3434	139	-2	72	449	18	508	10	Perm load 1,2	45 deg	4	428	3793	588	15	85	3816,956	10	
											11										11	
	90 deg	1a	0	**11800**	116	0	**276**	449	98	2707	12	Perm load 1,2	90 deg	1a	0	14507	565	0	374	14507,36	12	x x x
		1b	0	4209	116	0	92	449	18	508	13	Perm load 1,2	90 deg	1b	0	4716	565	0	111	4716,244	13	
		3	0	9264	**232**	0	210	449	28	761	14	Perm load 1,2	90 deg	3	0	10025	681	0	238	10025,4	14	x
		4 Construc	0	4312	139	0	93	449	18	508	15	Perm load 1,2	90 deg	4 Construc	0	4819	588	0	112	4819,077	15	
											16										16	
	-45 deg	1a	1530	6812	116	37	155	449	98	2707	17	Perm load 1,2	-45 deg	1a	3445	8726	565	106	224	9381,266	17	
		1b	90	3317	116	2	71	449	18	508	18	Perm load 1,2	-45 deg	1b	449	3676	565	15	84	3702,86	18	
		3	334	6478	232	8	143	449	28	761	19	Perm load 1,2	-45 deg	3	872	7016	681	27	162	7070,149	19	
		4	69	3434	139	2	72	449	18	508	20	Perm load 1,2	-45 deg	4	428	3793	588	15	85	3816,956	20	
											21										21	
Perm load 0,9	0 deg	1a	0	1741	87	0	35	337	98	2707	22	Perm load 0,9	0 deg	1a	2707	1741	424	98	35	3218,511	22	
		1b	0	1969	**87**	0	41	337	18	508	23	Perm load 0,9	0 deg	1b	508	1969	424	18	41	2033,444	23	
		3	0	3425	203	0	71	337	28	761	24	Perm load 0,9	0 deg	3	761	3425	540	28	71	3508,901	24	
		4	0	2128	110	0	43	337	18	508	25	Perm load 0,9	0 deg	4	508	2128	446	18	43	2187,345	25	
		6	0	**1725**	87	0	**35**				26	Perm load 0,9	0 deg	6							26	
											27										27	
	45 deg	1a	**-1834**	6466	87	**-44**	149	337	98	2707	28	Perm load 0,9	45 deg	1a	3748	8380	424	113	218	9179,969	28	x x
		1b	-130	2828	**87**	-3	61	337	18	508	29	Perm load 0,9	45 deg	1b	489	3187	424	16	74	3224,206	29	
		3	-398	6077	203	-9	135	337	28	761	30	Perm load 0,9	45 deg	3	936	6615	540	29	155	6681,13	30	
		4 Construc	-93	2977	110	-2	63	337	18	508	31	Perm load 0,9	45 deg	4 Construc	452	3336	446	15	76	3366,452	31	
											32										32	
	90 deg	1a	0	11560	87	0	272	337	98	2707	33	Perm load 0,9	90 deg	1a	0	14267	424	0	370	14267,27	33	
		1b	0	3747	87	0	84	337	18	508	34	Perm load 0,9	90 deg	1b	0	4255	424	0	102	4254,647	34	
		3	0	8902	203	0	204	337	28	761	35	Perm load 0,9	90 deg	3	0	9664	540	0	231	9663,812	35	
		4	0	3871	110	0	85	337	18	508	36	Perm load 0,9	90 deg	4	0	4379	446	0	103	4378,963	36	
											37										37	
	-45 deg	1a	**1834**	6466	87	**44**	149	337	98	2707	38	Perm load 0,9	-45 deg	1a	3748	8380	424	113	218	9179,969	38	x x
		1b	130	2828	**87**	3	61	337	18	508	39	Perm load 0,9	-45 deg	1b	489	3187	424	16	74	3224,206	39	
		3	398	6077	203	9	135	337	28	761	40	Perm load 0,9	-45 deg	3	936	6615	540	29	155	6681,13	40	
		4	93	2977	110	2	63	337	18	508	41	Perm load 0,9	-45 deg	4	452	3336	446	15	76	3366,452	41	
														Max	3748	14507	681	113	374	14507		

samenvatting

	Mast	Bijlage		Wind	Loadcase	M_{langs}	M_{dwars}	N	V_{langs}	V_{dwars}
12	W2S400+5	03-Q	Perm load	90 deg	1a	0	14507	565	0	374
14	W2S400+5	03-Q	Perm load	90 deg	3	0	10025	681	0	238
28	W2S400+5	03-Q	Perm load	45 deg	1a	3748	8380	424	113	218

W2S400+5 APPENDIX: Q

Loadcases for tower strength (ultimate limit state)
Loadcase according to 50341-3-15

	Attachmentpoint	AHEAD [N]	[N]	[N]	BACK [N]	[N]	[N]	Totaal Vert [kN]	Dwars [kN]	Langs [kN]	Belastingen op mastvoet, per lijn M_{langs}	M_{dwars}	N	V_{langs}	V_{dwars}	Belasting op mastvoet, belastinggeval	M_{langs}	M_{dwars}	N	V_{langs}	V_{dwars}
1a	1a 380C1F1 / 380C2F1	17045	6513	147783	17045	6513	-147783	34,09	13,026	0	0	814,6629	34,09	0	13,026	1a	0	2220,739	115,956	0	44,296
Wind, 10 dgr	Wind, 10 dgr 380C1F2/ 380C2F2	17045	6508	147783	17045	6508	-147783	34,09	13,016	0	0	683,9929	34,09	0	13,016	Wind angle: 0 dgr					
Permanent loads yg= 1.2	Permanent loads yg= 1.2380C1F3 / 380C2F3	17045	6502	147783	17045	6502	-147783	34,09	13,004	0	0	553,4609	34,09	0	13,004						
Wind angle: 0 dgr	Wind angle: 0 dgrGW / opgw	2226	857	19378	2226	857	-19378	4,452	1,714	0	0	90,00273	4,452	0	1,714						
	Comp. gl	4617	1768	40154	4617	1768	-40154	9,234	3,536	0	0	78,61995	9,234	0	3,536						
1b	1b 380C1F1 / 380C2F1	17036	7424	169771	17036	7424	-169771	34,072	14,848	0	0	907,5055	34,072	0	14,848	1b	0	2468,176	115,896	0	50,402
Wind, -20 dgr	Wind, -20 dgr 380C1F2/ 380C2F2	17036	7423	169771	17036	7423	-169771	34,072	14,846	0	0	758,9435	34,072	0	14,846	Wind angle: 0 dgr					
Permanent loads yg= 1.2	Permanent loads yg= 1.2380C1F3 / 380C2F3	17036	7422	169771	17036	7422	-169771	34,072	14,844	0	0	610,4215	34,072	0	14,844						
Wind angle: 0 dgr	Wind angle: 0 dgrGW / opgw	2225	961	21970	2225	961	-21970	4,45	1,922	0	0	101,7161	4,45	0	1,922						
	Comp. gl	4615	1971	45077	4615	1971	-45077	9,23	3,942	0	0	89,58925	9,23	0	3,942						
3	3 380C1F1 / 380C2F1	29376	10455	238677	29376	10455	-238677	58,752	20,91	0	0	1325,506	58,752	0	20,91	3	0	3843,028	232,096	0	78,766
Wind+ice, -5 dgr	Wind+ice, -5 dgr 380C1F2/ 380C2F2	29376	10452	238677	29376	10452	-238677	58,752	20,904	0	0	1116,16	58,752	0	20,904	Wind angle: 0 dgr					
Permanent loads yg= 1.2	Permanent loads yg= 1.2380C1F3 / 380C2F3	29376	10449	238677	29376	10449	-238677	58,752	20,898	0	0	906,9343	58,752	0	20,898						
Wind angle: 0 dgr	Wind angle: 0 dgrGW / opgw	9244	2664	60775	9244	2664	-60775	18,488	5,328	0	0	272,9924	18,488	0	5,328						
	Comp. gl	18676	5363	122498	18676	5363	-122498	37,352	10,726	0	0	221,4346	37,352	0	10,726						
4	4 380C1F1 / 380C2F1	20053	7508	171693	20053	7508	-171693	40,106	15,016	0	0	942,6835	40,106	0	15,016	4	0	2590,636	138,518	0	51,716
Construction/maintenance. +5 dgr	Construction/maintenance, 5 dgr 380C1F2/ 380C2F2	20053	7507	171693	20053	7507	-171693	40,106	15,014	0	0	792,4415	40,106	0	15,014	Wind angle: 0 dgr					
Permanent loads yg= 1.2	Permanent loads yg= 1.2380C1F3 / 380C2F3	20053	7506	171693	20053	7506	-171693	40,106	15,012	0	0	642,2395	40,106	0	15,012						
Wind angle: 0 dgr	Wind angle: 0 dgrGW / opgw	2978	1094	25008	2978	1094	-25008	5,956	2,188	0	0	114,4946	5,956	0	2,188						
	Comp. gl	6122	2243	51307	6122	2243	-51307	12,244	4,486	0	0	98,7767	12,244	0	4,486						
6	6 380C1F1 / 380C2F1	19177	7092	162441	19177	7092	-162441	38,354	14,184	0	0	892,5251	38,354	0	14,184	6	0	2435,001	130,462	0	48,278
Permanent, +10 dgr	Permanent, 10 dgr 380C1F2/ 380C2F2	19177	7092	162441	19177	7092	-162441	38,354	14,184	0	0	750,6851	38,354	0	14,184	0					
Permanent loads yg= 1.35	Permanent loads yg= 1.35380C1F3 / 380C2F3	19177	7092	162441	19177	7092	-162441	38,354	14,184	0	0	608,8451	38,354	0	14,184						
	GW / opgw	2505	932	21353	2505	932	-21353	5,01	1,864	0	0	97,63361	5,01	0	1,864						
	Comp. gl	5195	1931	44221	5195	1931	-44221	10,39	3,862	0	0	85,31225	10,39	0	3,862						
1a	1a 380C1F1 / 380C2F1	17049	22543	183132	17051	25846	-195119	34,1	48,389	-11,987	-611,337	2618,22	34,1	-11,987	48,389	1a	-1530,47	6811,849	115,986	-36,624	155,071
Wind, 10 dgr	Wind, 10 dgr 380C1F2/ 380C2F2	17049	21159	178348	17050	24178	-188973	34,099	45,337	-10,625	-435,625	2009,194	34,099	-10,625	45,337	Wind angle: 45 dgr					
Permanent loads yg= 1.2	Permanent loads yg= 1.2380C1F3 / 380C2F3	17048	19411	172571	17049	22068	-181469	34,097	41,479	-8,898	-275,838	1436,217	34,097	-8,898	41,479						
Wind angle: 45 dgr	Wind angle: 45 dgrGW / opgw	2227	3719	27068	2227	4308	-29443	4,454	8,027	-2,375	-133,713	445,4217	4,454	-2,375	8,027						
	Comp. gl	4618	5531	47908	4618	6308	-50647	9,236	11,839	-2,739	-73,953	302,7973	9,236	-2,739	11,839						
1b	1b 380C1F1 / 380C2F1	17036	10392	171437	17036	10979	-172153	34,072	21,371	-0,716	-36,516	1240,179	34,072	-0,716	21,371	1b	-89,8956	3316,661	115,896	-2,122	70,894
Wind, -20 dgr	Wind, -20 dgr 380C1F2/ 380C2F2	17036	10146	171172	17036	10683	-171777	34,072	20,829	-0,605	-24,805	1004,247	34,072	-0,605	20,829	Wind angle: 45 dgr					
Permanent loads yg= 1.2	Permanent loads yg= 1.2380C1F3 / 380C2F3	17036	9834	170867	17036	10308	-171344	34,072	20,142	-0,477	-14,787	774,6595	34,072	-0,477	20,142						
Wind angle: 45 dgr	Wind angle: 45 dgrGW / opgw	2225	1484	22378	2225	1588	-22550	4,45	3,072	-0,172	-9,6836	166,4611	4,45	-0,172	3,072						
	Comp. gl	4615	2671	45427	4615	2809	-45579	9,23	5,48	-0,152	-4,104	131,1153	9,23	-0,152	5,48						
3	3 380C1F1 / 380C2F1	29377	18822	244963	29378	20489	-247581	58,755	39,311	-2,618	-133,518	2263,971	58,755	-2,618	39,311	3	-334,069	6477,765	232,107	-7,901	142,672
Wind+ice, -5 dgr	Wind+ice, -5 dgr 380C1F2/ 380C2F2	29377	18123	243983	29377	19647	-246210	58,754	37,77	-2,227	-91,307	1807,675	58,754	-2,227	37,77	Wind angle: 45 dgr					
Permanent loads yg= 1.2	Permanent loads yg= 1.2380C1F3 / 380C2F3	29377	17238	242850	29377	18582	-244618	58,754	35,82	-1,768	-54,808	1369,525	58,754	-1,768	35,82						
Wind angle: 45 dgr	Wind angle: 45 dgrGW / opgw	9245	5332	62378	9245	5860	-63049	18,49	11,192	-0,671	-37,7773	603,1327	18,49	-0,671	11,192						
	Comp. gl	18677	8939	123915	18677	9640	-124532	37,354	18,579	-0,617	-16,659	433,462	37,354	-0,617	18,579						
4	4 380C1F1 / 380C2F1	20053	10461	172975	20053	11041	-173535	40,106	21,502	-0,56	-28,56	1273,469	40,106	-0,56	21,502	4	-68,6455	3434,034	138,518	-1,62	72,088
Construction/maintenance. +5 dgr	Construction/maintenance, 5 dgr 380C1F2/ 380C2F2	20053	10217	172769	20053	10748	-173241	40,106	20,965	-0,472	-19,352	1036,432	40,106	-0,472	20,965	Wind angle: 45 dgr					
Permanent loads yg= 1.2	Permanent loads yg= 1.2380C1F3 / 380C2F3	20053	9908	172531	20053	10377	-172903	40,106	20,285	-0,372	-11,532	805,7025	40,106	-0,372	20,285						
Wind angle: 45 dgr	Wind angle: 45 dgrGW / opgw	2978	1611	25273	2978	1713	-25388	5,956	3,324	-0,115	-6,4745	178,4514	5,956	-0,115	3,324						
	Comp. gl	6122	2938	51534	6122	3074	-51635	12,244	6,012	-0,101	-2,727	139,9787	12,244	-0,101	6,012						
1a	1a 380C1F1 / 380C2F1	17059	43378	264457	17059	43378	-264457	34,118	86,756	0	0	4575,016	34,118	0	86,756	1a	0	11800,36	116,042	0	275,532
Wind, 10 dgr	Wind, 10 dgr 380C1F2/ 380C2F2	17058	40254	251855	17058	40254	-251855	34,116	80,508	0	0	3451,28	34,116	0	80,508	Wind angle: 90 dgr					
Permanent loads yg= 1.2	Permanent loads yg= 1.2380C1F3 / 380C2F3	17056	36280	235871	17056	36280	-235871	34,112	72,56	0	0	2399,794	34,112	0	72,56						
Wind angle: 90 dgr	Wind angle: 90 dgrGW / opgw	2228	7398	42270	2228	7398	-42270	4,456	14,796	0	0	826,5135	4,456	0	14,796						
	Comp. gl	4620	10456	67128	4620	10456	-67128	9,24	20,912	0	0	547,761	9,24	0	20,912						
1b	1b 380C1F1 / 380C2F1	17037	14120	177780	17037	14120	-177780	34,074	28,24	0	0	1590,506	34,074	0	28,24	1b	0	4208,682	115,9	0	92,416
Wind, -20 dgr	Wind, -20 dgr 380C1F2/ 380C2F2	17037	13553	176563	17037	13553	-176563	34,074	27,106	0	0	1261,612	34,074	0	27,106	Wind angle: 90 dgr					
Permanent loads yg= 1.2	Permanent loads yg= 1.2380C1F3 / 380C2F3	17036	12838	175146	17036	12838	-175146	34,072	25,676	0	0	946,2135	34,072	0	25,676						
Wind angle: 90 dgr	Wind angle: 90 dgrGW / opgw	2225	2151	23864	2225	2151	-23864	4,45	4,302	0	0	235,7101	4,45	0	4,302						
	Comp. gl	4615	3546	46782	4615	3546	-46782	9,23	7,092	0	0	174,6393	9,23	0	7,092						
3	3 380C1F1 / 380C2F1	29382	29439	267163	29382	29439	-267163	58,764	58,878	0	0	3261,927	58,764	0	58,878	3	0	9264,059	232,138	0	210,18
Wind+ice, -5 dgr	Wind+ice, -5 dgr 380C1F2/ 380C2F2	29381	27824	263059	29381	27824	-263059	58,762	55,648	0	0	2540,708	58,762	0	55,648	Wind angle: 90 dgr					
Permanent loads yg= 1.2	Permanent loads yg= 1.2380C1F3 / 380C2F3	29380	25783	258193	29380	25783	-258193	58,76	51,566	0	0	1857,678	58,76	0	51,566						
Wind angle: 90 dgr	Wind angle: 90 dgrGW / opgw	9247	8678	68065	9247	8678	-68065	18,494	17,356	0	0	950,1601	18,494	0	17,356						
	Comp. gl	18679	13366	129367	18679	13366	-129367	37,358	26,732	0	0	653,5857	37,358	0	26,732						
4 Construction/maintenance. +5 dgr Permanent loads yg= 1.2	4 380C1F1 / 380C2F1	20054	14133	177989	20054	14133	-177989	40,108	28,266	0	0	1618,442	40,108	0	28,266	4 Construc	0	4311,514	138,52	0	93,266
Construction/mainter	Construction/maintenance, 5 dgr 380C1F2/ 380C2F2	20053	13576	177019	20053	13576	-177019	40,106	27,152	0	0	1290,099	40,106	0	27,152	Wind angle: 90 dgr					
Permanent loads yg=	Permanent loads yg= 1.2380C1F3 / 380C2F3	20053	12873	175893	20053	12873	-175893	40,106	25,746	0	0	974,9935	40,106	0	25,746						
Wind angle: 90 dgr	Wind angle: 90 dgrGW / opgw	2978	2257	26289	2978	2257	-26289	5,956	4,514	0	0	245,4484	5,956	0	4,514						
	Comp. gl	6122	3794	52450	6122	3794	-52450	12,244	7,588	0	0	182,5307	12,244	0	7,588						
1a	1a 380C1F1 / 380C2F1	17051	25846	195119	17049	22543	-183132	34,1	48,389	11,987	611,337	2618,22	34,1	11,987	48,389	1a	1530,466	6811,849	115,986	36,624	155,071
Wind, 10 dgr	Wind, 10 dgr 380C1F2/ 380C2F2	17050	24178	188973	17049	21159	-178348	34,099	45,337	10,625	435,625	2009,194	34,099	10,625	45,337	Wind angle: -45 dgr					
Permanent loads yg= 1.2	Permanent loads yg= 1.2380C1F3 / 380C2F3	17049	22068	181469	17048	19411	-172571	34,097	41,479	8,898	275,838	1436,217	34,097	8,898	41,479						
Wind angle: -45 dgr	Wind angle: -45 dgrGW / opgw	2227	4308	29443	2227	3719	-27068	4,454	8,027	2,375	133,7125	445,4217	4,454	2,375	8,027						
	Comp. gl	4618	6308	50647	4618	5531	-47908	9,236	11,839	2,739	73,953	302,7973	9,236	2,739	11,839						
1b	1b 380C1F1 / 380C2F1	17036	10979	172153	17036	10392	-171437	34,072	21,371	0,716	36,516	1240,179	34,072	0,716	21,371	1b	89,8956	3316,661	115,896	2,122	70,894
Wind, -20 dgr	Wind, -20 dgr 380C1F2/ 380C2F2	17036	10683	171777	17036	10146	-171172	34,072	20,829	0,605	24,805	1004,247	34,072	0,605	20,829	Wind angle: -45 dgr					
Permanent loads yg= 1.2	Permanent loads yg= 1.2380C1F3 / 380C2F3	17036	10308	171344	17036	9834	-170867	34,072	20,142	0,477	14,787	774,6595	34,072	0,477	20,142						
Wind angle: -45 dgr	Wind angle: -45 dgrGW / opgw	2225	1588	22550	2225	1484	-22378	4,45	3,072	0,172	9,6836	166,4611	4,45	0,172	3,072						
	Comp. gl	4615	2809	45579	4615	2671	-45427	9,23	5,48	0,152	4,104	131,1153	9,23	0,152	5,48						
3	3 380C1F1 / 380C2F1	29378	20489	247581	29377	18822	-244963	58,755	39,311	2,618	133,518	2263,971	58,755	2,618	39,311	3	334,0693	6477,765	232,107	7,901	142,672
Wind+ice, -5 dgr	Wind+ice, -5 dgr 380C1F2/ 380C2F2	29377	19647	246210	29377	18123	-243983	58,754	37,77	2,227	91,307	1807,675	58,754	2,227	37,77	Wind angle: -45 dgr					
Permanent loads yg= 1.2	Permanent loads yg= 1.2380C1F3 / 380C2F3	29377	18582	244618	29377	17238	-242850	58,754	35,82	1,768	54,808	1369,525	58,754	1,768	35,82						
Wind angle: -45 dgr	Wind angle: -45 dgrGW / opgw	9245	5860	63049	9245	5332	-62378	18,49	11,192	0,671	37,7773	603,1327	18,49	0,671	11,192						
0	0 Comp. gl	18677	9640	124532	18677	8939	-123915	37,354	18,579	0,617	16,659	433,462	37,354	0,617	18,579						
4	4 380C1F1 / 380C2F1	20053	11041	173535	20053	10461	-172975	40,106	21,502	0,56	28,56	1273,469	40,106	0,56	21,502	4	68,6455	3434,034	138,518	1,62	72,088
Construction/maintenance. +5 dgr	Construction/maintenance, 5 dgr 380C1F2/ 380C2F2	20053	10748	173241	20053	10217	-172769	40,106	20,965	0,472	19,352	1036,432	40,106	0,472	20,965	Wind angle: -45 dgr					
Permanent loads yg= 1.2	Permanent loads yg= 1.2380C1F3 / 380C2F3	20053	10377	172903	20053	9908	-172531	40,106	20,285	0,372	11,532	805,7025	40,106	0,372	20,285						
Wind angle: -45 dgr	Wind angle: -45 dgrGW / opgw	2978	1713	25388	2978	1611	-25273	5,956	3,324	0,115	6,4745	178,4514	5,956	0,115	3,324						
	Comp. gl	6122	3074	51635	6122	2938	-51534	12,244	6,012	0,101	2,727	139,9787	12,244	0,101	6,012						
1a	1a 380C1F1 / 380C2F1	12781	5163	116856	12781	5163	-116856	25,562	10,326	0	0	639,3544	25,562	0	10,326	1a	0	1740,966	86,948	0	35,084
Wind, 10 dgr	Wind, 10 dgr 380C1F2/ 380C2F2	12781	5158	116856	12781	5158	-116856	25,562	10,316	0	0	535,6844	25,562	0	10,316	Wind angle: 0 dgr					
Permanent loads yg=0.9	Permanent loads yg= 0.9380C1F3 / 380C2F3	12781	5152	116856	12781	5152	-116856	25,562	10,304	0	0	432,1524	25,562	0	10,304						
Wind angle: 0 dgr	Wind angle: 0 dgrGW / opgw	1669	675	15226	1669	675	-15226	3,338	1,35	0	0	71,13486	3,338	0	1,35						
	Comp. gl	3462	1394	31599	3462	1394	-31599	6,924	2,788	0	0	62,6397	6,924	0	2,788						
1b	1b 380C1F1 / 380C2F1	12774	6004	137241	12774	6004	-137241	25,548	12,008	0	0	725,0747	25,548	0	12,008	1b	0	1969,08	86,902	0	40,712
Wind, -20 dgr	Wind, -20 dgr 380C1F2/ 380C2F2	12774	6003	137241	12774	6003	-137241	25,548	12,006	0	0	604,9127	25,548	0	12,006	Wind angle: 0 dgr					
Permanent loads yg=0.9	Permanent loads yg= 0.9380C1F3 / 380C2F3	12774	6002	137241	12774	6002	-137241	25,548	12,004	0	0	484,7907	25,548	0	12,004						
Wind angle: 0 dgr	Wind angle: 0 dgrGW / opgw	1668	769	17575	1668	769	-17575	3,336	1,538	0	0	81,72218	3,336	0	1,538						
	Comp. gl	3461	1578	36072	3461	1578	-36072	6,922	3,156	0	0	72,57935	6,922	0	3,156						
3	3 380C1F1 / 380C2F1	25109	9299	212205	25109	9299	-212205	50,218	18,598	0	0	1169,959	50,218	0	18,598	3	0	3425,309	203,06	0	71,11
Wind+ice, -5 dgr	Wind+ice, -5 dgr 380C1F2/ 380C2F2	25109	9296	212205	25109	9296	-212205	50,218	18,592	0	0	983,7334	50,218	0	18,592	Wind angle: 0 dgr					
Permanent loads yg=0.9	Permanent loads yg= 0.9380C1F3 / 380C2F3	25109	9293	212206	25109	9293	-212206	50,218	18,586	0	0	797,6274	50,218	0	18,586						
Wind angle: 0 dgr	Wind angle: 0 dgrGW / opgw	8685	2547	58077	8685	2547	-58077	17,37	5,094	0	0	261,4494	17,37	0	5,094						
	Comp. gl	17518	5120	116923	17518	5120	-116923	35,036	10,24	0	0	212,5393	35,036	0	10,24						
4	4 380C1F1 / 380C2F1	15788	6214	142035	15788	6214	-142035	31,576	12,428	0	0	773,0782	31,576	0	12,428	4	0	2127,642	109,502	0	42,922
Construction/maintenance. +5 dgr	Construction/maintenance, 5 dgr 380C1F2/ 380C2F2	15788	6213	142035	15788	6213	-142035	31,576	12,426	0	0	648,7162	31,576	0	12,426	Wind angle: 0 dgr					
Permanent loads yg=0.9	Permanent loads yg= 0.9380C1F3 / 380C2F3	15788	6211	142035	15788	6211	-142035	31,576	12,422	0	0	524,3322	31,576	0	12,422						
Wind angle: 0 dgr	Wind angle: 0 dgrGW / opgw	2421	926	21162	2421	926	-21162	4,842	1,852	0	0	97,20312	4,842	0	1,852						
	Comp. gl	4966	1897	43378	4966	1897	-43378	9,932	3,794	0	0	84,3121	9,932	0	3,794						
6	6 380C1F1 / 380C2F1	12781	5102	116857	12781	5102	-116857	25,562	10,204	0	0	633,1324	25,562	0	10,204	6	0	1725,17	86,948	0	34,702
Permanent, +10 dgr	Permanent, 10 dgr 380C1F2/ 380C2F2	12781	5102	116857	12781	5102	-116857	25,562	10,204	0	0	531,0924	25,562	0	10,204	0					
Permanent loads yg= 1.35	Permanent loads yg= 1.35380C1F3 / 380C2F3	12781	5102	116857	12781	5102	-116857	25,562	10,204	0	0	429,0524	25,562	0	10,204						
	GW / opgw	1669	665	15226	1669	665	-15226	3,338	1,33	0	0	70,00886	3,338	0	1,33						
	Comp. gl	3462	1380	31600	3462	1380	-31600	6,924	2,76	0	0	61,8837	6,924	0	2,76						
1a	1a 380C1F1 / 380C2F1	12785	21663	163009	12786	25064	-177259	25,571	46,727	-14,25	-726,75	2495,845	25,571	-14,25	46,727	1a	-1833,73	6465,917	86,977	-44,063	149,085
Wind, 10 dgr	Wind, 10 dgr 380C1F2/ 380C2F2	12785	20233	157183	12786	23347	-170010	25,571	43,58	-12,827	-525,907	1899,548	25,571	-12,827	43,58	Wind angle: 45 dgr					
Permanent loads yg=0.9	Permanent loads yg= 0.9380C1F3 / 380C2F3	12784	18424	150020	12785	21172	-160994	25,569	39,596	-10,974	-340,194	1340,235	25,569	-10,974	39,596						
Wind angle: 45 dgr	Wind angle: 45 dgrGW / opgw	1670	3622	24855	1670	4224	-27536	3,34	7,846	-2,681	-150,94	436,8567	3,34	-2,681	7,846						
	Comp. gl	3463	5267	41858	3463	6069	-45189	6,926	11,336	-3,331	-89,937	293,4321	6,926	-3,331	11,336						
1b	1b 380C1F1 / 380C2F1	12774	9007	139715	12774	9607	-140754	25,548	18,614	-1,039	-52,989	1061,981	25,548	-1,039	18,614	1b	-130,425	2827,958	86,902	-3,082	61,449
Wind, -20 dgr	Wind, -20 dgr 380C1F2/ 380C2F2	12774	8755	139328	12774	9304	-140209	25,548	18,059	-0,881	-36,121	853,0857	25,548	-0,881	18,059	Wind angle: 45 dgr					
Permanent loads yg=0.9	Permanent loads yg= 0.9380C1F3 / 380C2F3	12774	8437	138881	12774	8920	-139579	25,548	17,357	-0,698	-21,638	650,7337	25,548	-0,698	17,357						
Wind angle: 45 dgr	Wind angle: 45 dgrGW / opgw	1668	1300	18170	1668	1408	-18414	3,336	2,708	-0,244	-13,7372	147,5932	3,336	-0,244	2,708						

	Comp. gl	3461	2285	36591	3461	2426	-36811	6,922	4,711	-0,22	-5,94	114,5644	6,922	-0,22	4,711												
	3 380C1F1 / 380C2F1	25110	17728	219938	25111	19418	-223104	50,221	37,146	-3,166	-161,466	2115,921	50,221	-3,166	37,146	3	-397,984	6076,842	203,07	-9,419	135,414						
Wind+ice, -5 dgr	Wind+ice, -5 dgr 380C1F2/ 380C2F2	25110	17020	218747	25110	18564	-221449	50,22	35,584	-2,702	-110,782	1680,414	50,22	-2,702	35,584	Wind angle: 45 dgr											
Permanent loads yg+0	Permanent loads yg+ 0.9380C1F3 / 380C2F3	25110	16124	217365	25110	17485	-219519	50,22	33,609	-2,154	-66,774	1263,349	50,22	-2,154	33,609												
Wind angle: 45 dgr	Wind angle: 45 dgrGW / opgw	8686	5220	59821	8686	5750	-60546	17,372	10,97	-0,725	-40,8175	592,2653	17,372	-0,725	10,97												
	Comp. gl	17518	8701	118475	17519	9404	-119147	35,037	18,105	-0,672	-18,144	424,8925	35,037	-0,672	18,105												
Construction/maintenan	4 380C1F1 / 380C2F1	15788	9188	143816	15788	9776	-144577	31,576	18,964	-0,761	-38,811	1106,414	31,576	-0,761	18,964	4 Construc:	-92,9174	2977,093	109,502	-2,195	63,437						
Construction/maintenan	Construction/maintenance, 5 dgr 380C1F2/ 380C2F2	15788	8940	141531	15788	9479	-144177	31,576	18,419	-0,644	-26,404	894,4292	31,576	-0,644	18,419	Wind angle: 45 dgr											
Permanent loads yg+	Permanent loads yg+ 0.9380C1F3 / 380C2F3	15788	8627	143207	15788	9103	-143716	31,576	17,73	-0,509	-15,779	688,8802	31,576	-0,509	17,73												
Wind angle: 45 dgr	Wind angle: 45 dgrGW / opgw	2421	1447	21512	2421	1550	-21660	4,842	2,997	-0,148	-8,3324	161,6666	4,842	-0,148	2,997												
	Comp. gl	4966	2595	43682	4966	2732	-43815	9,932	5,327	-0,133	-3,591	125,7031	9,932	-0,133	5,327												
1a	1a 380C1F1 / 380C2F1	12793	42929	254216	12793	42929	-254216	25,586	85,858	0	0	4491,592	25,586	0	85,858	1a	0	11560,27	87,024	0	272,17						
Wind, 10 dgr	Wind, 10 dgr 380C1F2/ 380C2F2	12792	39763	240668	12792	39763	-240668	25,584	79,526	0	0	3373,391	25,584	0	79,526	Wind angle: 90 dgr											
Permanent loads yg+	Permanent loads yg+ 0.9380C1F3 / 380C2F3	12791	35728	223269	12791	35728	-223269	25,582	71,456	0	0	2327,953	25,582	0	71,456												
Wind angle: 90 dgr	Wind angle: 90 dgrGW / opgw	1671	7354	41259	1671	7354	-41259	3,342	14,708	0	0	823,1844	3,342	0	14,708												
	Comp. gl	3465	10311	61835	3465	10311	-61835	6,93	20,622	0	0	544,1468	6,93	0	20,622												
1b	1b 380C1F1 / 380C2F1	12775	12849	148701	12775	12849	-148701	25,55	25,698	0	0	1423,274	25,55	0	25,698	1b	0	3747,084	86,91	0	83,616						
Wind, -20 dgr	Wind, -20 dgr 380C1F2/ 380C2F2	12775	12262	147011	12775	12262	-147011	25,55	24,524	0	0	1118,16	25,55	0	24,524	Wind angle: 90 dgr											
Permanent loads yg+	Permanent loads yg+ 0.9380C1F3 / 380C2F3	12775	11521	145023	12775	11521	-145023	25,55	23,042	0	0	826,9775	25,55	0	23,042												
Wind angle: 90 dgr	Wind angle: 90 dgrGW / opgw	1669	1991	20212	1669	1991	-20212	3,338	3,982	0	0	219,3165	3,338	0	3,982												
	Comp. gl	3461	3185	38518	3461	3185	-38518	6,922	6,37	0	0	159,3574	6,922	0	6,37												
3	3 380C1F1 / 380C2F1	25115	28522	246207	25115	28522	-246207	50,23	57,044	0	0	3130,758	50,23	0	57,044	3	0	8902,468	203,104	0	203,862						
Wind+ice, -5 dgr	Wind+ice, -5 dgr 380C1F2/ 380C2F2	25114	26877	241439	25114	26877	-241439	50,228	53,754	0	0	2425,419	50,228	0	53,754	Wind angle: 90 dgr											
Permanent loads yg+	Permanent loads yg+ 0.9380C1F3 / 380C2F3	25113	24801	235739	25113	24801	-235739	50,226	49,602	0	0	1759,159	50,226	0	49,602												
Wind angle: 90 dgr	Wind angle: 90 dgrGW / opgw	8689	8583	65910	8689	8583	-65910	17,378	17,166	0	0	941,0913	17,378	0	17,166												
	Comp. gl	17521	13148	124374	17521	13148	-124374	35,042	26,296	0	0	646,0404	35,042	0	26,296												
4	4 380C1F1 / 380C2F1	15789	12933	150536	15789	12933	-150536	31,578	25,866	0	0	1458,425	31,578	0	25,866	4	0	3871,401	109,506	0	85,014						
Construction/maintenan	Construction/maintenance, 5 dgr 380C1F2/ 380C2F2	15789	12363	149251	15789	12363	-149251	31,578	24,726	0	0	1153,025	31,578	0	24,726	Wind angle: 90 dgr											
Permanent loads yg+	Permanent loads yg+ 0.9380C1F3 / 380C2F3	15788	11643	147752	15788	11643	-147752	31,576	23,286	0	0	861,1162	31,576	0	23,286												
Wind angle: 90 dgr	Wind angle: 90 dgrGW / opgw	2421	2105	22810	2421	2105	-22810	4,842	4,21	0	0	229,9585	4,842	0	4,21												
	Comp. gl	4966	3463	44876	4966	3463	-44876	9,932	6,926	0	0	168,8761	9,932	0	6,926												
1a	1a 380C1F1 / 380C2F1	12786	25064	177259	12785	21663	-163009	25,571	46,727	14,25	726,75	2495,845	25,571	14,25	46,727	1a	1833,728	6465,917	86,977	44,063	149,085						
Wind, 10 dgr	Wind, 10 dgr 380C1F2/ 380C2F2	12786	23347	170010	12785	20233	-157183	25,571	43,58	12,827	525,907	1899,548	25,571	12,827	43,58	Wind angle: -45 dgr											
Permanent loads yg+	Permanent loads yg+ 0.9380C1F3 / 380C2F3	12785	21172	160994	12784	18424	-150020	25,569	39,596	10,974	340,194	1340,235	25,569	10,974	39,596												
Wind angle: -45 dgr	Wind angle: -45 dgrGW / opgw	1670	4224	27536	1670	3622	-24855	3,34	7,846	2,681	150,9403	436,8567	3,34	2,681	7,846												
	Comp. gl	3463	6069	45189	3463	5267	-41858	6,926	11,336	3,331	89,937	293,4321	6,926	3,331	11,336												
1b	1b 380C1F1 / 380C2F1	12774	9607	140754	12774	9007	-139715	25,548	18,614	1,039	52,989	1061,981	25,548	1,039	18,614	1b	130,4252	2827,958	86,902	3,082	61,449						
Wind, -20 dgr	Wind, -20 dgr 380C1F2/ 380C2F2	12774	9304	140209	12774	8755	-139128	25,548	18,059	0,881	36,121	853,0857	25,548	0,881	18,059	Wind angle: -45 dgr											
Permanent loads yg+	Permanent loads yg+ 0.9380C1F3 / 380C2F3	12774	8920	139579	12774	8437	-138881	25,548	17,357	0,698	21,638	650,7337	25,548	0,698	17,357												
Wind angle: -45 dgr	Wind angle: -45 dgrGW / opgw	1668	1408	18414	1668	1300	-18170	3,336	2,708	0,244	13,7372	147,5932	3,336	0,244	2,708												
	Comp. gl	3461	2426	36811	3461	2285	-36591	6,922	4,711	0,22	5,94	114,5644	6,922	0,22	4,711												
3	3 380C1F1 / 380C2F1	25111	19418	223104	25110	17728	-219938	50,221	37,146	3,166	161,466	2115,921	50,221	3,166	37,146	3	397,9835	6076,842	203,07	9,419	135,414						
Wind+ice, -5 dgr	Wind+ice, -5 dgr 380C1F2/ 380C2F2	25110	18564	221449	25110	17020	-218747	50,22	35,584	2,702	110,782	1680,414	50,22	2,702	35,584	Wind angle: -45 dgr											
Permanent loads yg+	Permanent loads yg+ 0.9380C1F3 / 380C2F3	25110	17485	219519	25110	16124	-217365	50,22	33,609	2,154	66,774	1263,349	50,22	2,154	33,609												
Wind angle: -45 dgr	Wind angle: -45 dgrGW / opgw	8686	5750	60546	8686	5220	-59821	17,372	10,97	0,725	40,8175	592,2653	17,372	0,725	10,97												
	Comp. gl	17519	9404	119147	17518	8701	-118475	35,037	18,105	0,672	18,144	424,8925	35,037	0,672	18,105												
4	4 380C1F1 / 380C2F1	15788	9776	144577	15788	9188	-143816	31,576	18,964	0,761	38,811	1106,414	31,576	0,761	18,964	4	92,9174	2977,093	109,502	2,195	63,437						
Construction/maintenan	Construction/maintenance, 5 dgr 380C1F2/ 380C2F2	15788	9479	144177	15788	8940	-143533	31,576	18,419	0,644	26,404	894,4292	31,576	0,644	18,419	Wind angle: -45 dgr											
Permanent loads yg+	Permanent loads yg+ 0.9380C1F3 / 380C2F3	15788	9103	143716	15788	8627	-143207	31,576	17,73	0,509	15,779	688,8802	31,576	0,509	17,73												
Wind angle: -45 dgr	Wind angle: -45 dgrGW / opgw	2421	1550	21660	2421	1447	-21512	4,842	2,997	0,148	8,3324	161,6666	4,842	0,148	2,997												
	Comp. gl	4966	2732	43815	4966	2595	-43682	9,932	5,327	0,133	3,591	125,7031	9,932	0,133	5,327												

W2S400 03-Q2

Hoogte mast		57 m	
Hoogte onderste stroomdraad (F3)		31 m	
	Hoogte		Excentriciteit ophanging t.o.v. hart mast
Bliksemdraad = GW / CH_{max} =	0,7 m =	56,3 m	-1,459 m
1e traverse - 380C1F1 F2 +	10 m =	51 m	4,41 m
2e traverse - 380C1F2 F3 +	10 m =	41 m	4,41 m
3e traverse - 380C1F3		31 m	4,41 m
Passieve lijn = Comp C. F3 -	4 m =	27 m	-1,825 m

Uit mast			Uit lijnen					
ULS (incl bel factoren)			SLS					
N	V	M	Nmin	Nmax	Vmax	Mlangs;max	Mdwars;max	
[kN]	[kN]	[kNm]	[kN]	[kN]	[kN]	[kNm]	[kNm]	
449	98	2707	97	174	191	961	8249	

W2S400+5 TOWER APPENDIX: Q2

Loadcases for tower deflection analyses (Servicability limit state)

Loadcase according to

50341-3-15

	Attachment point	AHEAD [N]	[N]	[N]	BACK [N]	[N]	[N]	Totaal Vert [kN]	Dwars [kN]	Langs [kN]
1a	1a 380C1F1 / 380C2F1	14202	5604	127432	14202	5604	-127432	28,404	11,208	0
Wind, 10 dgr	Wind, 10 dgr 380C1F2/	14202	5601	127432	14202	5601	-127432	28,404	11,202	0
Permanent l	Permanent loads vg= 1	14202	5597	127433	14202	5597	-127433	28,404	11,194	0
Wind angle:	Wind angle: 0 dgrGW /	1855	734	16643	1855	734	-16643	3,71	1,468	0
	Comp. gl	3847	1517	34520	3847	1517	-34520	7,694	3,034	0
1b	1b 380C1F1 / 380C2F1	14194	6488	148420	14194	6488	-148420	28,388	12,976	0
Wind, -20 dg	Wind, -20 dgr 380C1F2	14194	6488	148420	14194	6488	-148420	28,388	12,976	0
Permanent l	Permanent loads vg= 1	14194	6487	148420	14194	6487	-148420	28,388	12,974	0
Wind angle:	Wind angle: 0 dgrGW /	1854	835	19082	1854	835	-19082	3,708	1,67	0
	Comp. gl	3845	1712	39161	3845	1712	-39161	7,69	3,424	0
3	3 380C1F1 / 380C2F1	22419	8527	194794	22419	8527	-194794	44,838	17,054	0
Wind+ice, -5	Wind+ice, -5 dgr 380C1	22419	8526	194794	22419	8526	-194794	44,838	17,052	0
Permanent l	Permanent loads vg= 1	22419	8523	194794	22419	8523	-194794	44,838	17,046	0
Wind angle:	Wind angle: 0 dgrGW /	6530	2063	47087	6530	2063	-47087	13,06	4,126	0
	Comp. gl	13213	4160	95055	13213	4160	-95055	26,426	8,32	0
4	4 380C1F1 / 380C2F1	16206	6341	145038	16206	6341	-145038	32,412	12,682	0
Construction	Construction/maintenai	16206	6340	145038	16206	6340	-145038	32,412	12,68	0
Permanent l	Permanent loads vg= 1	16206	6339	145038	16206	6339	-145038	32,412	12,678	0
Wind angle:	Wind angle: 0 dgrGW /	2356	905	20697	2356	905	-20697	4,712	1,81	0
	Comp. gl	4850	1860	42552	4850	1860	-42552	9,7	3,72	0
1a	1a 380C1F1 / 380C2F1	14204	16175	148395	14205	18358	-155965	28,409	34,533	-7,57
Wind, 10 dgr	Wind, 10 dgr 380C1F2/	14204	15262	145430	14205	17254	-152061	28,409	32,516	-6,631
Permanent l	Permanent loads vg= 1	14203	14111	141896	14204	15861	-147361	28,407	29,972	-5,465
Wind angle:	Wind angle: 45 dgrGW	1855	2622	21312	1855	3013	-22871	3,71	5,635	-1,559
	Comp. gl	3848	3998	39053	3848	4509	-40744	7,696	8,507	-1,691
1b	1b 380C1F1 / 380C2F1	14194	8459	149353	14194	8847	-149759	28,388	17,306	-0,406
Wind, -20 dg	Wind, -20 dgr 380C1F2	14194	8296	149203	14194	8651	-149545	28,388	16,947	-0,342
Permanent l	Permanent loads vg= 1	14194	8089	149031	14194	8403	-149300	28,388	16,492	-0,269
Wind angle:	Wind angle: 45 dgrGW	1854	1181	19311	1854	1250	-19409	3,708	2,431	-0,098
	Comp. gl	3845	2177	39356	3845	2268	-39441	7,69	4,445	-0,085
3	3 380C1F1 / 380C2F1	22419	14095	198786	22419	15203	-200465	44,838	29,298	-1,679
Wind+ice, -5	Wind+ice, -5 dgr 380C1	22419	13630	198160	22419	14643	-199585	44,838	28,273	-1,425
Permanent l	Permanent loads vg= 1	22419	13042	197437	22419	13936	-198566	44,838	26,978	-1,129
Wind angle:	Wind angle: 45 dgrGW	6530	3843	48220	6531	4196	-48696	13,061	8,039	-0,476
	Comp. gl	13213	6545	96055	13214	7013	-96490	26,427	13,558	-0,435
4	4 380C1F1 / 380C2F1	16206	8304	145779	16206	8688	-146105	32,412	16,992	-0,326
Construction	Construction/maintenai	16206	8142	145658	16206	8494	-145934	32,412	16,636	-0,276
Permanent l	Permanent loads vg= 1	16206	7937	145520	16206	8248	-145736	32,412	16,185	-0,216
Wind angle:	Wind angle: 45 dgrGW	2356	1249	20855	2356	1316	-20924	4,712	2,565	-0,069
	Comp. gl	4850	2322	42686	4850	2412	-42746	9,7	4,734	-0,06
1a	1a 380C1F1 / 380C2F1	14210	30056	202579	14210	30056	-202579	28,42	60,112	0
Wind, 10 dgr	Wind, 10 dgr 380C1F2/	14209	27960	193836	14209	27960	-193836	28,418	55,92	0
Permanent l	Permanent loads vg= 1	14208	25300	182892	14208	25300	-182892	28,416	50,6	0
Wind angle:	Wind angle: 90 dgrGW	1856	5088	31783	1856	5088	-31783	3,712	10,176	0
	Comp. gl	3849	7266	51574	3849	7266	-51574	7,698	14,532	0
1b	1b 380C1F1 / 380C2F1	14195	10918	152991	14195	10918	-152991	28,39	21,836	0
Wind, -20 dg	Wind, -20 dgr 380C1F2	14195	10544	152286	14195	10544	-152286	28,39	21,088	0
Permanent l	Permanent loads vg= 1	14195	10073	151469	14195	10073	-151469	28,39	20,146	0
Wind angle:	Wind angle: 90 dgrGW	1854	1620	20172	1854	1620	-20172	3,708	3,24	0
	Comp. gl	3846	2754	40126	3846	2754	-40126	7,692	5,508	0
3	3 380C1F1 / 380C2F1	22422	21156	213242	22422	21156	-213242	44,844	42,312	0
Wind+ice, -5	Wind+ice, -5 dgr 380C1	22421	20080	210534	22421	20080	-210534	44,842	40,16	0
Permanent l	Permanent loads vg= 1	22421	18723	207344	22421	18723	-207344	44,842	37,446	0
Wind angle:	Wind angle: 90 dgrGW	6532	6084	52276	6532	6084	-52276	13,064	12,168	0
	Comp. gl	13215	9504	99911	13215	9504	-99911	26,43	19,008	0
4	4 380C1F1 / 380C2F1	16207	10734	148732	16207	10734	-148732	32,414	21,468	0
Construction	Construction/maintenai	16207	10366	148156	16207	10366	-148156	32,414	20,732	0
Permanent l	Permanent loads vg= 1	16207	9901	147491	16207	9901	-147491	32,414	19,802	0
Wind angle:	Wind angle: 90 dgrGW	2356	1677	21471	2356	1677	-21471	4,712	3,354	0
	Comp. gl	4850	2890	43235	4850	2890	-43235	9,7	5,78	0
1a	1a 380C1F1 / 380C2F1	14205	18358	155965	14204	16175	-148395	28,409	34,533	7,57
Wind, 10 dgr	Wind, 10 dgr 380C1F2/	14205	17254	152061	14204	15262	-145430	28,409	32,516	6,631
Permanent l	Permanent loads vg= 1	14204	15861	147361	14203	14111	-141896	28,407	29,972	5,465
Wind angle:	Wind angle: -45 dgrGW	1855	3013	22871	1855	2622	-21312	3,71	5,635	1,559
	Comp. gl	3848	4509	40744	3848	3998	-39053	7,696	8,507	1,691
1b	1b 380C1F1 / 380C2F1	14194	8847	149759	14194	8459	-149353	28,388	17,306	0,406
Wind, -20 dg	Wind, -20 dgr 380C1F2	14194	8651	149545	14194	8296	-149203	28,388	16,947	0,342
Permanent l	Permanent loads vg= 1	14194	8403	149300	14194	8089	-149031	28,388	16,492	0,269
Wind angle:	Wind angle: -45 dgrGW	1854	1250	19409	1854	1181	-19311	3,708	2,431	0,098
	Comp. gl	3845	2268	39441	3845	2177	-39356	7,69	4,445	0,085
3	3 380C1F1 / 380C2F1	22419	15203	200465	22419	14095	-198786	44,838	29,298	1,679
Wind+ice, -5	Wind+ice, -5 dgr 380C1	22419	14643	199585	22419	13630	-198160	44,838	28,273	1,425
Permanent l	Permanent loads vg= 1	22419	13936	198566	22419	13042	-197437	44,838	26,978	1,129
Wind angle:	Wind angle: -45 dgrGW	6531	4196	48696	6530	3843	-48220	13,061	8,039	0,476
	Comp. gl	13214	7013	96490	13213	6545	-96055	26,427	13,558	0,435
4	4 380C1F1 / 380C2F1	16206	8688	146105	16206	8304	-145779	32,412	16,992	0,326
Construction	Construction/maintenai	16206	8494	145934	16206	8142	-145658	32,412	16,636	0,276
Permanent l	Permanent loads vg= 1	16206	8248	145736	16206	7937	-145520	32,412	16,185	0,216
Wind angle:	Wind angle: -45 dgrGW	2356	1316	20924	2356	1249	-20855	4,712	2,565	0,069
	Comp. gl	4850	2412	42746	4850	2322	-42686	9,7	4,734	0,06

		Belastingen uit lijnen M_{langs}	M_{dwars}	N	V_{langs}	V_{dwars}	Belasting uit mast N	V	M
Perm load 1,2	0 deg	1a 0	**1899**	97	0	**38**	374	65	1805
		1b 0	2139	**97**	0	44	374	65	1805
		3 0	3080	174	0	64	374	65	1805
		4 0	2166	112	0	44	374	65	1805
	45 deg	1a **-961**	4927	97	**-23**	111	374	65	1805
		1b -51	2702	**97**	-1	58	374	65	1805
		3 -218	4834	174	-5	106	374	65	1805
		4 -40	2727	112	-1	57	374	65	1805
	90 deg	1a 0	**8249**	97	0	**191**	374	65	1805
		1b 0	3290	97	0	72	374	65	1805
		3 0	6690	**174**	0	151	374	65	1805
		4 0	3308	112	0	71	374	65	1805
	-45 deg	1a **961**	4927	97	**23**	111	374	65	1805
		1b 51	2702	**97**	1	58	374	65	1805
		3 218	4834	174	5	106	374	65	1805
		4 40	2727	112	1	57	374	65	1805

regel		Loadcase	Totaal M_{langs}	M_{dwars}	N	V_{langs}	V_{dwars}	Totaal moment	M langs max	M dwars max	N max	V langs max	V dwars max	M tot max	N min
1	Perm load 1,2 0 deg	1a	1805	3703	471	65	103	4119,769	1						
2	Perm load 1,2 0 deg	1b	1805	3943	471	65	109	4336,594	2						x
3	Perm load 1,2 0 deg	3	1805	4885	548	65	129	5207,538	3						
4	Perm load 1,2 0 deg	4	1805	3971	486	65	109	4361,772	4						
5									5						
6	Perm load 1,2 45 deg	1a	2765	6731	471	88	176	7277,382	6 x			x			
7	Perm load 1,2 45 deg	1b	1856	4506	471	67	123	4873,432	7						x
8	Perm load 1,2 45 deg	3	2022	6639	548	70	171	6940,124	8						
9	Perm load 1,2 45 deg	4	1845	4532	486	66	122	4892,657	9						
10									10						
11	Perm load 1,2 90 deg	1a	1805	10053	471	65	257	10214,17	11	x			x	x	
12	Perm load 1,2 90 deg	1b	1805	5095	471	65	137	5404,901	12						
13	Perm load 1,2 90 deg	3	1805	8494	548	65	216	8683,805	13		x				
14	Perm load 1,2 90 deg	4 Construct	1805	5113	486	65	136	5421,723	14						
15									15						
16	Perm load 1,2 -45 deg	1a	2237	6731	471	88	176	7093,391	16			x			
17	Perm load 1,2 -45 deg	1b	1327	4506	471	67	123	4697,674	17						x
18	Perm load 1,2 -45 deg	3	1494	6639	548	70	171	6804,916	18						
19	Perm load 1,2 -45 deg	4	1316	4532	486	66	122	4718,818	19						
			2765	10053	548	88	257	10214							
					471										

samenvatting

Mast	Bijlage	Wind	Loadcase	M_{langs}	M_{dwars}	N	V_{langs}	V_{dwars}
2	W2S400+5 03-Q2	Perm load :0 deg	1b	1805	3943	471	65	109
6	W2S400+5 03-Q2	Perm load :45 deg	1a	2765	6731	471	88	176
11	W2S400+5 03-Q2	Perm load :90 deg	1a	1805	10053	471	65	257
13	W2S400+5 03-Q2	Perm load :90 deg	3	1805	8494	548	65	216
W2S400+5 03-Q2		#N/B	#N/B	#N/B	#N/B	#N/B	#N/B	#N/B
W2S400+5 03-Q2		#N/B	#N/B	#N/B	#N/B	#N/B	#N/B	#N/B

Belastingen op mastvoet, per lijn M_{langs}	M_{dwars}	N	V_{langs}	V_{dwars}		Belasting op mastvoet, belastinggeval M_{langs}	M_{dwars}	N	V_{langs}	V_{dwars}
0	696,8696	28,404	0	11,208	1a	0	1898,801	96,616	0	38,106
0	584,5436	28,404	0	11,202	Wind angle: 0 dgr					
0	472,2756	28,404	0	11,194						
0	77,23551	3,71	0	1,468						
0	67,87645	7,694	0	3,034						
0	786,9671	28,388	0	12,976	1b	0	2138,584	96,562	0	44,02
0	657,2071	28,388	0	12,976	Wind angle: 0 dgr					
0	527,3851	28,388	0	12,974						
0	88,61103	3,708	0	1,67						
0	78,41375	7,69	0	3,424						
0	1067,49	44,838	0	17,054	3	0	3080,171	174	0	63,598
0	896,8676	44,838	0	17,052	Wind angle: 0 dgr					
0	726,1616	44,838	0	17,046						
0	213,2393	13,06	0	4,126						
0	176,4126	26,426	0	8,32						
0	789,7189	32,412	0	12,682	4	0	2166,256	111,648	0	43,57
0	662,8169	32,412	0	12,68	Wind angle: 0 dgr					
0	535,9549	32,412	0	12,678						
0	95,02819	4,712	0	1,81						
0	82,7375	9,7	0	3,72						
-386,07	1886,467	28,409	-7,57	34,533	1a	-960,785	4926,795	96,631	-22,916	111,163
-271,871	1458,44	28,409	-6,631	32,516	Wind angle: 45 dgr					
-169,415	1054,407	28,407	-5,465	29,972						
-87,7717	311,8376	3,71	-1,559	5,635						
-45,657	215,6438	7,696	-1,691	8,507						
-20,706	1007,797	28,388	-0,406	17,306	1b	-50,8794	2701,694	96,562	-1,2	57,621
-14,022	820,0181	28,388	-0,342	16,947	Wind angle: 45 dgr					
-8,339	636,4431	28,388	-0,269	16,492						
-5,5174	131,4553	3,708	-0,098	2,431						
-2,295	105,9808	7,69	-0,085	4,445						
-85,629	1691,934	44,838	-1,679	29,298	3	-217,597	4834,292	174,002	-5,144	106,146
-58,425	1356,929	44,838	-1,425	28,273	Wind angle: 45 dgr					
-34,999	1034,054	44,838	-1,129	26,978						
-26,7988	433,5397	13,061	-0,476	8,039						
-11,745	317,8367	26,427	-0,435	13,558						
-16,626	1009,529	32,412	-0,326	16,992	4	-40,1427	2726,864	111,648	-0,947	57,112
-11,316	825,0129	32,412	-0,276	16,636	Wind angle: 45 dgr					
-6,696	644,6719	32,412	-0,216	16,185						
-3,8847	137,5347	4,712	-0,069	2,565						
-1,62	110,1155	9,7	-0,06	4,734						
0	3191,044	28,42	0	60,112	1a	0	8248,81	96,664	0	191,34
0	2418,043	28,418	0	55,92	Wind angle: 90 dgr					
0	1693,915	28,416	0	50,6						
0	567,493	3,712	0	10,176						
0	378,3152	7,698	0	14,532						
0	1238,836	28,39	0	21,836	1b	0	3290,05	96,57	0	71,818
0	989,8079	28,39	0	21,088	Wind angle: 90 dgr					
0	749,7259	28,39	0	20,146						
0	177,002	3,708	0	3,24						
0	134,6781	7,692	0	5,508						
0	2355,674	44,844	0	42,312	3	0	6689,546	174,022	0	151,094
0	1844,313	44,842	0	40,16	Wind angle: 90 dgr					
0	1358,579	44,842	0	37,446						
0	665,998	13,064	0	12,168						
0	464,9813	26,43	0	19,008						
0	1237,814	32,414	0	21,468	4	0	3307,892	111,654	0	71,136
0	992,9577	32,414	0	20,732	Wind angle: 90 dgr					
0	756,8077	32,414	0	19,802						
0	181,9554	4,712	0	3,354						
0	138,3575	9,7	0	5,78						
386,07	1886,467	28,409	7,57	34,533	1a	960,7847	4926,795	96,631	22,916	111,163
271,871	1458,44	28,409	6,631	32,516	Wind angle: -45 dgr					
169,415	1054,407	28,407	5,465	29,972						
87,7717	311,8376	3,71	1,559	5,635						
45,657	215,6438	7,696	1,691	8,507						
20,706	1007,797	28,388	0,406	17,306	1b	50,8794	2701,694	96,562	1,2	57,621
14,022	820,0181	28,388	0,342	16,947	Wind angle: -45 dgr					
8,339	636,4431	28,388	0,269	16,492						
5,5174	131,4553	3,708	0,098	2,431						
2,295	105,9808	7,69	0,085	4,445						
85,629	1691,934	44,838	1,679	29,298	3	217,5968	4834,292	174,002	5,144	106,146
58,425	1356,929	44,838	1,425	28,273	Wind angle: -45 dgr					
34,999	1034,054	44,838	1,129	26,978						
26,7988	433,5397	13,061	0,476	8,039						
11,745	317,8367	26,427	0,435	13,558						
16,626	1009,529	32,412	0,326	16,992	4	40,1427	2726,864	111,648	0,947	57,112
11,316	825,0129	32,412	0,276	16,636	Wind angle: -45 dgr					
6,696	644,6719	32,412	0,216	16,185						
3,8847	137,5347	4,712	0,069	2,565						
1,62	110,1155	9,7	0,06	4,734						

W2E350+5 | 05-F

Hoogte mast				55	m		
Hoogte onderste stroomdraad (F3)				29	m		
				Hoogte		Excentriciteit ophanging t.o.v. hart mast	
Bliksemdraad = GW / OPGW	H_{mast} -	0,512	m =	54,488	m	0,761	m
1e traverse - 380C1F1	F2 +	8,5	m =	46	m	0	m
2e traverse - 380C1F2	F3 +	8,5	m =	37,5	m	0	m
3e traverse - 380C1F3				29	m	0	m
Passieve lijn = Comp C.	F3 -	7,5	m =	21,5	m	2,087	m

Uit mast (excl belastingsfactoren) N [kN]	V [kN]	M [kNm]	Uit lijnen (incl belastingsfactoren) Nmin [kN]	Nmax [kN]	Vmax [kN]	Mlangs;max [kNm]	Mdwars;max [kNm]
674	102	2615	38	102	957	35054	4631

		Belastingen uit lijnen	M_{langs}	M_{dwars}	N	V_{langs}	V_{dwars}	Belasting uit mast N	V	M
Perm load 1,2	0 deg	1a	-18405	820	51	-499	22	674	102	2615
		1b	-21786	962	51	-590	26	674	19	490
		3	-32027	1442	101	-878	38	674	29	735
		4	-21923	972	62	-595	26	674	19	490
		6	-20140	890	57	-546	24			
	45 deg	1a	-23451	2813	51	-632	75	674	102	2615
		1b	-22034	1327	51	-597	36	674	19	490
		3	-32963	2579	101	-902	69	674	29	735
		4	-22106	1335	62	-600	36	674	19	490
	90 deg	1a	-30974	**4631**	51	-831	**123**	674	102	2615
		1b	-22620	1650	51	-612	44	674	19	490
		3	**-35054**	3589	**102**	**-957**	96	674	29	735
		4	-22551	1652	62	-612	44	674	19	490
	-45 deg	1a	-22165	2472	51	-598	66	674	102	2615
		1b	-21959	1267	51	-595	34	674	19	490
		3	-32687	2390	101	-895	64	674	29	735
		4	-22051	1275	62	-599	34	674	19	490
Perm load 0,9	0 deg	1a	**-14722**	656	38	**-399**	18	506	102	2615
		1b	-17987	794	**38**	-487	21	506	19	490
		3	-29019	1309	89	-796	35	506	29	735
		4	-18458	818	49	-501	22	506	19	490
		6	-14722	**650**	38	-399	**17**			
	45 deg	1a	-21237	2714	38	-571	72	506	102	2615
		1b	-18354	1164	38	-497	31	506	19	490
		3	-30148	2453	89	-826	66	506	29	735
		4	-18709	1184	49	-508	32	506	19	490
	90 deg	1a	-29677	4571	38	-795	122	506	102	2615
		1b	-19186	1498	38	-519	40	506	19	490
		3	-32591	3479	89	-890	93	506	29	735
		4	-19303	1507	49	-523	40	506	19	490
	-45 deg	1a	-19688	2361	38	-530	63	506	102	2615
		1b	-18246	1103	**38**	-494	30	506	19	490
		3	-29818	2262	89	-817	60	506	29	735
		4	-18634	1123	49	-506	30	506	19	490

regel			Loadcase	Totaal M_{langs}	M_{dwars}	N	V_{langs}	V_{dwars}	Totaal moment		M_{langs}	M_{dwars}	N	V_{langs}	V_{dwars}	Totaal mom	Nmin
1	Perm load 1,2	0 deg	1a	21020	820	725	601	22	21035,49	1							
2	Perm load 1,2	0 deg	1b	22276	962	725	610	26	22296,98	2							
3	Perm load 1,2	0 deg	3	32762	1442	775	906	38	32794,09	3							
4	Perm load 1,2	0 deg	4	22414	972	736	614	26	22434,74	4							
5	Perm load 1,2	0 deg	6							5							
6										6							
7	Perm load 1,2	45 deg	1a	25300	4662	725	704	147	25726,42	7		x					
8	Perm load 1,2	45 deg	1b	22380	1674	725	610	49	22442,92	8							
9	Perm load 1,2	45 deg	3	33483	3099	775	922	89	33626,29	9							
10	Perm load 1,2	45 deg	4	22453	1681	736	614	49	22515,71	10							
11										11							
12	Perm load 1,2	90 deg	1a	33589	4631	725	933	225	33906,42	12					x		
13	Perm load 1,2	90 deg	1b	23110	1650	725	631	63	23168,82	13							
14	Perm load 1,2	90 deg	3	35789	3589	776	985	125	35968,81	14	x		x	x		x	
15	Perm load 1,2	90 deg	4 Construc	23041	1652	736	631	63	23100,41	15							
16										16							
17	Perm load 1,2	-45 deg	1a	24014	4321	725	670	138	24399,5	17							
18	Perm load 1,2	-45 deg	1b	22306	1614	725	608	47	22364,26	18							
19	Perm load 1,2	-45 deg	3	33207	2910	775	915	84	33333,87	19							
20	Perm load 1,2	-45 deg	4	22397	1622	736	612	48	22455,94	20							
21										21							
22	Perm load 0,9	0 deg	1a	17337	656	544	501	18	17349,6	22							
23	Perm load 0,9	0 deg	1b	18477	794	544	506	21	18494,38	23							x
24	Perm load 0,9	0 deg	3	29755	1309	594	825	35	29783,42	24							
25	Perm load 0,9	0 deg	4	18949	818	555	521	22	18966,44	25							
26	Perm load 0,9	0 deg	6							26							
27										27							
28	Perm load 0,9	45 deg	1a	23086	4563	544	643	144	23532,95	28							
29	Perm load 0,9	45 deg	1b	18701	1511	544	510	45	18761,74	29							
30	Perm load 0,9	45 deg	3	30668	2973	594	846	86	30811,8	30							
31	Perm load 0,9	45 deg	4 Construc	19056	1530	555	521	45	19117,55	31							
32										32							
33	Perm load 0,9	90 deg	1a	32292	4571	544	897	224	32613,95	33							
34	Perm load 0,9	90 deg	1b	19677	1498	544	538	59	19733,72	34							
35	Perm load 0,9	90 deg	3	33327	3479	594	919	122	33507,9	35							
36	Perm load 0,9	90 deg	4	19793	1507	555	543	59	19850,38	36							
37										37							
38	Perm load 0,9	-45 deg	1a	21537	4210	544	602	135	21944,31	38							
39	Perm load 0,9	-45 deg	1b	18592	1449	544	508	43	18648,61	39							x
40	Perm load 0,9	-45 deg	3	30338	2782	594	837	81	30465,33	40							
41	Perm load 0,9	-45 deg	4	18981	1470	555	519	44	19037,64	41							
			Max	35789	4662	776	985	225	35969								
						544											

samenvatting

	Mast	Bijlage		Wind	Loadcase	M_{langs}	M_{dwars}	N	V_{langs}	V_{dwars}
12	W2E350+5	05-F	Perm load 1,2	90 deg	1a	33589	4631	725	933	225
14	W2E350+5	05-F	Perm load 1,2	90 deg	3	35789	3589	776	985	125
39	W2E350+5	05-F	Perm load 0,9	-45 deg	1b	18592	1449	544	508	43

W2E350 + 5 TOWER (rev 6.0, date: 05-11-2012) AppendixF

Loadcases for tower strength (ultimate limit state)

Loadcase accord	Attachment point	BACK [N]	[N]	[N]	[N]	AHEAD [N]	[N]	Totaal Vert [kN]	Dwars [kN]	Langs [kN]	Belastingen op mastvoet, per lijn M_{langs}	M_{dwars}	N	V_{langs}	V_{dwars}	Belasting op mastvoet, belastinggeval	M_{langs}	M_{dwars}	N	V_{langs}	V_{dwars}
1a	380C1F1 /	14907	6455	-146657	0	0	0	14,907	6,455	-146,657	-6746,22	296,93	14,907	-146,657	6,455	1a	-18404,5	819,6568	50,706	-499,08	21,955
Wind, 10 dgr	380C1F2 /	14907	6451	-146657	0	0	0	14,907	6,451	-146,657	-5499,64	241,9125	14,907	-146,657	6,451	Wind angle: 0 dgr					
Permanent loads y	380C1F3 /	14907	6446	-146657	0	0	0	14,907	6,446	-146,657	-4253,05	186,934	14,907	-146,657	6,446						
Wind angle: 0 dgr	GW / opgw	1947	849	-19242	0	0	0	1,947	0,849	-19,242	-1048,46	47,741979	1,947	-19,242	0,849						
	Comp. gl	4038	1754	-39867	0	0	0	4,038	1,754	-39,867	-857,141	46,138306	4,038	-39,867	1,754						
1b	380C1F1 /	14900	7606	-173968	0	0	0	14,9	7,606	-173,968	-8002,53	349,876	14,9	-173,968	7,606	1b	-21785,9	962,3362	50,682	-590,398	25,81
Wind, -20 dgr	380C1F2 /	14900	7605	-173968	0	0	0	14,9	7,605	-173,968	-6523,8	285,1875	14,9	-173,968	7,605	Wind angle: 0 dgr					
Permanent loads y	380C1F3 /	14900	7604	-173968	0	0	0	14,9	7,604	-173,968	-5045,07	220,516	14,9	-173,968	7,604						
Wind angle: 0 dgr	GW / opgw	1946	984	-22489	0	0	0	1,946	0,984	-22,489	-1225,38	55,097098	1,946	-22,489	0,984						
	Comp. gl	4036	2011	-46005	0	0	0	4,036	2,011	-46,005	-989,108	51,659632	4,036	-46,005	2,011						
3	380C1F1 /	25691	10256	-234233	0	0	0	25,691	10,256	-234,233	-10774,7	471,776	25,691	-234,233	10,256	3	-32026,9	1442,438	101,488	-877,656	38,423
Wind+ice, -5 dgr	380C1F2 /	25691	10254	-234233	0	0	0	25,691	10,254	-234,233	-8783,74	384,525	25,691	-234,233	10,254	Wind angle: 0 dgr					
Permanent loads y	380C1F3 /	25691	10251	-234233	0	0	0	25,691	10,251	-234,233	-6792,76	297,279	25,691	-234,233	10,251						
Wind angle: 0 dgr	GW / opgw	8083	2543	-58024	0	0	0	8,083	2,543	-58,024	-3161,61	144,71415	8,083	-58,024	2,543						
	Comp. gl	16332	5119	-116933	0	0	0	16,332	5,119	-116,933	-2514,06	144,14338	16,332	-116,933	5,119						
4	380C1F1 /	17913	7550	-172685	0	0	0	17,913	7,55	-172,685	-7943,51	347,3	17,913	-172,685	7,55	4	-21923,4	972,0558	61,98	-595,296	26,024
Construction/maintenance,+5		17913	7549	-172685	0	0	0	17,913	7,549	-172,685	-6475,69	283,0875	17,913	-172,685	7,549	Wind angle: 0 dgr					
Permanent loads y	380C1F3 /	17913	7548	-172685	0	0	0	17,913	7,548	-172,685	-5007,87	218,892	17,913	-172,685	7,548						
Wind angle: 0 dgr	GW / opgw	2699	1108	-25331	0	0	0	2,699	1,108	-25,331	-1380,24	62,426643	2,699	-25,331	1,108						
	Comp. gl	5542	2269	-51910	0	0	0	5,542	2,269	-51,91	-1116,07	60,349654	5,542	-51,91	2,269						
6	380C1F1 /	16772	7005	-160442	0	0	0	16,772	7,005	-160,442	-7380,33	322,23	16,772	-160,442	7,005	6	-20139,7	890,4703	57,049	-546,145	23,845
Permanent, +10 d	380C1F2 /	16772	7005	-160442	0	0	0	16,772	7,005	-160,442	-6016,58	262,6875	16,772	-160,442	7,005	0					
Permanent loads y	380C1F3 /	16772	7005	-160442	0	0	0	16,772	7,005	-160,442	-4652,82	203,145	16,772	-160,442	7,005						
	GW / opgw	2190	922	-21111	0	0	0	2,19	0,922	-21,111	-1150,3	51,904526	2,19	-21,111	0,922						
	Comp. gl	4543	1908	-43708	0	0	0	4,543	1,908	-43,708	-939,722	50,503241	4,543	-43,708	1,908						
1a	380C1F1 /	14912	23138	-189670	0	0	0	14,912	23,138	-189,67	-8724,82	1064,348	14,912	-189,67	23,138	1a	-23451,4	2813,117	50,72	-631,585	74,907
Wind, 10 dgr	380C1F2 /	14911	21776	-184396	0	0	0	14,911	21,776	-184,396	-6914,85	816,6	14,911	-184,396	21,776	Wind angle: 45 dgr					
Permanent loads y	380C1F3 /	14910	20067	-177988	0	0	0	14,91	20,067	-177,988	-5161,65	581,943	14,91	-177,988	20,067						
Wind angle: 45 d	GW / opgw	1948	3847	-28499	0	0	0	1,948	3,847	-28,499	-1552,85	211,09776	1,948	-28,499	3,847						
	Comp. gl	4039	6079	-51032	0	0	0	4,039	6,079	-51,032	-1097,19	139,12789	4,039	-51,032	6,079						
1b	380C1F1 /	14900	10657	-176091	0	0	0	14,9	10,657	-176,091	-8100,19	490,222	14,9	-176,091	10,657	1b	-22033,7	1327,465	50,682	-596,846	35,517
Wind, -20 dgr	380C1F2 /	14900	10417	-175775	0	0	0	14,9	10,417	-175,775	-6591,56	390,6375	14,9	-175,775	10,417	Wind angle: 45 dgr					
Permanent loads y	380C1F3 /	14900	10116	-175411	0	0	0	14,9	10,116	-175,411	-5086,92	293,364	14,9	-175,411	10,116						
Wind angle: 45 d	GW / opgw	1946	1525	-23017	0	0	0	1,946	1,525	-23,017	-1254,15	84,575106	1,946	-23,017	1,525						
	Comp. gl	4036	2802	-46552	0	0	0	4,036	2,802	-46,552	-1000,87	68,666132	4,036	-46,552	2,802						
3	380C1F1 /	25692	18873	-242182	0	0	0	25,692	18,873	-242,182	-11140,4	868,158	25,692	-242,182	18,873	3	-32963,2	2578,632	101,493	-902,065	68,846
Wind+ice, -5 dgr	380C1F2 /	25692	18190	-241025	0	0	0	25,692	18,19	-241,025	-9038,44	682,125	25,692	-241,025	18,19	Wind angle: 45 dgr					
Permanent loads y	380C1F3 /	25692	17334	-239686	0	0	0	25,692	17,334	-239,686	-6950,89	502,686	25,692	-239,686	17,334						
Wind angle: 45 d	GW / opgw	8084	5298	-60060	0	0	0	8,084	5,298	-60,06	-3272,55	294,82935	8,084	-60,06	5,298						
	Comp. gl	16333	9151	-119112	0	0	0	16,333	9,151	-119,112	-2560,91	230,83347	16,333	-119,112	9,151						
4	380C1F1 /	17914	10581	-174301	0	0	0	17,914	10,581	-174,301	-8017,85	486,726	17,914	-174,301	10,581	4	-22106,2	1334,591	61,982	-600,048	35,663
Construction/maintenance,+5		17914	10344	-174057	0	0	0	17,914	10,344	-174,057	-6527,14	387,9	17,914	-174,057	10,344	Wind angle: 45 dgr					
Permanent loads y	380C1F3 /	17913	10046	-173777	0	0	0	17,913	10,046	-173,777	-5039,53	291,334	17,913	-173,777	10,046						
Wind angle: 45 d	GW / opgw	2699	1641	-25661	0	0	0	2,699	1,641	-25,661	-1398,22	91,468747	2,699	-25,661	1,641						
	Comp. gl	5542	3051	-52252	0	0	0	5,542	3,051	-52,252	-1123,42	77,162654	5,542	-52,252	3,051						
1a	380C1F1 /	14918	38327	-252760	0	0	0	14,918	38,327	-252,76	-11627	1763,042	14,918	-252,76	38,327	1a	-30973,7	4630,673	50,741	-831,132	123,231
Wind, 10 dgr	380C1F2 /	14917	35775	-241952	0	0	0	14,917	35,775	-241,952	-9073,2	1341,5625	14,917	-241,952	35,775	Wind angle: 90 dgr					
Permanent loads y	380C1F3 /	14916	32556	-228346	0	0	0	14,916	32,556	-228,346	-6622,03	944,124	14,916	-228,346	32,556						
Wind angle: 90 d	GW / opgw	1949	6539	-40255	0	0	0	1,949	6,539	-40,255	-2193,41	357,78022	1,949	-40,255	6,539						
	Comp. gl	4041	10034	-67819	0	0	0	4,041	10,034	-67,819	-1458,11	224,16457	4,041	-67,819	10,034						
1b	380C1F1 /	14900	13359	-181105	0	0	0	14,9	13,359	-181,105	-8330,83	614,514	14,9	-181,105	13,359	1b	-22619,7	1650,422	50,683	-612,135	44,095
Wind, -20 dgr	380C1F2 /	14900	12899	-180081	0	0	0	14,9	12,899	-180,081	-6753,04	483,7125	14,9	-180,081	12,899	Wind angle: 90 dgr					
Permanent loads y	380C1F3 /	14900	12323	-178890	0	0	0	14,9	12,323	-178,89	-5187,81	357,367	14,9	-178,89	12,323						
Wind angle: 90 d	GW / opgw	1946	2012	-24212	0	0	0	1,946	2,012	-24,212	-1319,26	111,11076	1,946	-24,212	2,012						
	Comp. gl	4037	3502	-47847	0	0	0	4,037	3,502	-47,847	-1028,71	83,718219	4,037	-47,847	3,502						
3	380C1F1 /	25695	26578	-259690	0	0	0	25,695	26,578	-259,69	-11945,7	1222,588	25,695	-259,69	26,578	3	-35053,8	3589,202	101,505	-956,808	95,875
Wind+ice, -5 dgr	380C1F2 /	25695	25266	-256221	0	0	0	25,695	25,266	-256,221	-9608,29	947,475	25,695	-256,221	25,266	Wind angle: 90 dgr					
Permanent loads y	380C1F3 /	25694	23622	-252124	0	0	0	25,694	23,622	-252,124	-7311,6	685,038	25,694	-252,124	23,622						
Wind angle: 90 d	GW / opgw	8086	7732	-64556	0	0	0	8,086	7,732	-64,556	-3517,53	427,45466	8,086	-64,556	7,732						
	Comp. gl	16335	12677	-124217	0	0	0	16,335	12,677	-124,217	-2670,67	306,64665	16,335	-124,217	12,677						
4	380C1F1 /	17914	13236	-178213	0	0	0	17,914	13,236	-178,213	-8197,8	608,856	17,914	-178,213	13,236	4	-22551	1651,501	61,983	-611,639	44,083
Construction/maintenance,+5		17914	12785	-177407	0	0	0	17,914	12,785	-177,407	-6652,76	479,4375	17,914	-177,407	12,785	Wind angle: 90 dgr					
Permanent loads y	380C1F3 /	17914	12220	-176474	0	0	0	17,914	12,22	-176,474	-5117,75	354,38	17,914	-176,474	12,22						
Wind angle: 90 d	GW / opgw	2699	2110	-26448	0	0	0	2,699	2,11	-26,448	-1441,1	117,02362	2,699	-26,448	2,11						
	Comp. gl	5542	3732	-53097	0	0	0	5,542	3,732	-53,097	-1141,59	91,804154	5,542	-53,097	3,732						
1a	380C1F1 /	14910	20279	-178767	0	0	0	14,91	20,279	-178,767	-8223,28	932,834	14,91	-178,767	20,279	1a	-22164,8	2471,506	50,715	-597,644	65,832
Wind, 10 dgr	380C1F2 /	14910	19149	-174662	0	0	0	14,91	19,149	-174,662	-6549,83	718,0875	14,91	-174,662	19,149	Wind angle: -45 dgr					
Permanent loads y	380C1F3 /	14909	17734	-169727	0	0	0	14,909	17,734	-169,727	-4922,08	514,286	14,909	-169,727	17,734						
Wind angle: -45 d	GW / opgw	1947	3334	-26317	0	0	0	1,947	3,334	-26,317	-1433,96	183,14466	1,947	-26,317	3,334						
	Comp. gl	4039	5336	-48171	0	0	0	4,039	5,336	-48,171	-1035,68	123,15339	4,039	-48,171	5,336						
1b	380C1F1 /	14900	10153	-175454	0	0	0	14,9	10,153	-175,454	-8070,88	467,038	14,9	-175,454	10,153	1b	-21959,2	1267,242	50,682	-594,907	33,917
Wind, -20 dgr	380C1F2 /	14900	9954	-175230	0	0	0	14,9	9,954	-175,23	-6571,13	373,275	14,9	-175,23	9,954	Wind angle: -45 dgr					
Permanent loads y	380C1F3 /	14900	9703	-174974	0	0	0	14,9	9,703	-174,974	-5074,25	281,387	14,9	-174,974	9,703						
Wind angle: -45 d	GW / opgw	1946	1435	-22861	0	0	0	1,946	1,435	-22,861	-1245,65	79,671186	1,946	-22,861	1,435						
	Comp. gl	4036	2672	-46388	0	0	0	4,036	2,672	-46,388	-997,342	65,871132	4,036	-46,388	2,672						
3	380C1F1 /	25692	17440	-239845	0	0	0	25,692	17,44	-239,845	-11032,9	802,24	25,692	-239,845	17,44	3	-32686,5	2390,257	101,491	-894,842	63,806
Wind+ice, -5 dgr	380C1F2 /	25692	16873	-239019	0	0	0	25,692	16,873	-239,019	-8963,21	632,7375	25,692	-239,019	16,873	Wind angle: -45 dgr					
Permanent loads y	380C1F3 /	25691	16162	-238064	0	0	0	25,691	16,162	-238,064	-6903,86	468,698	25,691	-238,064	16,162						
Wind angle: -45 d	GW / opgw	8084	4842	-59459	0	0	0	8,084	4,842	-59,459	-3239,8	269,98282	8,084	-59,459	4,842						
0 Comp. gl		16332	8489	-118455	0	0	0	16,332	8,489	-118,455	-2546,78	216,59838	16,332	-118,455	8,489						
4	380C1F1 /	17913	10083	-173811	0	0	0	17,913	10,083	-173,811	-7995,31	463,818	17,913	-173,811	10,083	4	-22050,6	1275,1	61,98	-598,602	34,082
Construction/maintenance,+5		17913	9886	-173639	0	0	0	17,913	9,886	-173,639	-6511,46	370,725	17,913	-173,639	9,886	Wind angle: -45 dgr					
Permanent loads y	380C1F3 /	17913	9637	-173443	0	0	0	17,913	9,637	-173,443	-5029,85	279,473	17,913	-173,443	9,637						
Wind angle: -45 d	GW / opgw	2699	1553	-25562	0	0	0	2,699	1,553	-25,562	-1392,82	86,673803	2,699	-25,562	1,553						
	Comp. gl	5542	2923	-52147	0	0	0	5,542	2,923	-52,147	-1121,16	74,410654	5,542	-52,147	2,923						
1a	380C1F1 /	11178	5177	-117394	0	0	0	11,178	5,177	-117,394	-5400,12	238,142	11,178	-117,394	5,177	1a	-14722,2	656,4654	38,022	-399,205	17,596
Wind, 10 dgr	380C1F2 /	11178	5174	-117394	0	0	0	11,178	5,174	-117,394	-4402,28	194,025	11,178	-117,394	5,174	Wind angle: 0 dgr					
Permanent loads y	380C1F3 /	11178	5169	-117394	0	0	0	11,178	5,169	-117,394	-3404,43	149,901	11,178	-117,394	5,169						
Wind angle: 0 dgr	GW / opgw	1460	677	-15289	0	0	0	1,46	0,677	-15,289	-833,067	37,999436	1,46	-15,289	0,677						
	Comp. gl	3028	1399	-31734	0	0	0	3,028	1,399	-31,734	-682,281	36,397936	3,028	-31,734	1,399						
1b	380C1F1 /	11172	6290	-143819	0	0	0	11,172	6,29	-143,819	-6615,67	289,34	11,172	-143,819	6,29	1b	-17987	794,014	38,002	-487,357	21,312
Wind, -20 dgr	380C1F2 /	11172	6289	-143819	0	0	0	11,172	6,289	-143,819	-5393,21	235,8375	11,172	-143,819	6,289	Wind angle: 0 dgr					
Permanent loads y	380C1F3 /	11172	6288	-143819	0	0	0	11,172	6,288	-143,819	-4170,75	182,352	11,172	-143,819	6,288						
Wind angle: 0 dgr	GW / opgw	1459	803	-18356	0	0	0	1,459	0,803	-18,356	-1000,18	44,864163	1,459	-18,356	0,803						
	Comp. gl	3027	1642	-37544	0	0	0	3,027	1,642	-37,544	-807,196	41,620349	3,027	-37,544	1,642						
3	380C1F1 /	21959	9184	-209682	0	0	0	21,959	9,184	-209,682	-9645,37	422,464	21,959	-209,682	9,184	3	-29019,2	1308,597	88,791	-796,386	34,874
Wind+ice, -5 dgr	380C1F2 /	21959	9182	-209682	0	0	0	21,959	9,182	-209,682	-7863,08	344,325	21,959	-209,682	9,182	Wind angle: 0 dgr					
Permanent loads y	380C1F3 /	21959	9179	-209682	0	0	0	21,959	9,179	-209,682	-6080,78	266,191	21,959	-209,682	9,179						
Wind angle: 0 dgr	GW / opgw	7595	2434	-55540	0	0	0	7,595	2,434	-55,54	-3026,26	138,40359	7,595	-55,54	2,434						
	Comp. gl	15319	4895	-111800	0	0	0	15,319	4,895	-111,8	-2403,7	137,21325	15,319	-111,8	4,895						
4	380C1F1 /	14184	6342	-145028	0	0	0	14,184	6,342	-145,028	-6671,29	291,732	14,184	-145,028	6,342	4	-18458,5	818,3178	49,294	-501,375	21,924
Construction/maintenance,+5		14184	6342	-145028	0	0	0	14,184	6,342	-145,028	-5438,55	237,825	14,184	-145,028	6,342	Wind angle: 0 dgr					
Permanent loads y	380C1F3 /	14184	6341	-145028	0	0	0	14,184	6,341	-145,028	-4205,81	183,889	14,184	-145,028	6,341						
Wind angle: 0 dgr	GW / opgw	2211	952	-21752	0	0	0	2,211	0,952	-21,752	-1185,22	53,555147	2,211	-21,752	0,952						
	Comp. gl	4531	1947	-44539	0	0	0	4,531	1,947	-44,539	-957,589	51,316697	4,531	-44,539	1,947						
6	380C1F1 /	11178	5126	-117395	0	0	0	11,178	5,126	-117,395	-5400,17	235,796	11,178	-117,395	5,126	6	-14722,3	650,3025	38,022	-399,208	17,432
Permanent, +10 d	380C1F2 /	11178	5126	-117395	0	0	0	11,178	5,126	-117,395	-4402,31	192,225	11,178	-117,395	5,126	0					
Permanent loads y	380C1F3 /	11178	5126	-117395	0	0	0	11,178	5,126	-117,395	-3404,46	148,654	11,178	-117,395	5,126						
	GW / opgw	1460	668	-15289	0	0	0	1,46	0,668	-15,289	-833,067	37,509044	1,46	-15,289	0,668						
	Comp. gl	3028	1386	-31734	0	0	0	3,028	1,386	-31,734	-682,281	36,118436	3,028	-31,734	1,386						
1a	380C1F1 /	11182	22396	-172725	0	0	0	11,182	22,396	-172,725	-7945,35	1030,216	11,182	-172,725	22,396	1a	-21237,3	2713,745	38,035	-570,753	72,245
Wind, 10 dgr	380C1F2 /	11182	20991	-166465	0	0	0	11,182	20,991	-166,465	-6242,44	787,1625	11,182	-166,465	20,991	Wind angle: 45 dgr					

Permanent loads y	380C1F3 / 11181	19225	-158726	0	0	0	11,181	19,225	-158,726	-4603,05	557,525	11,181	-158,726	19,225											
Wind angle: 45 dg	GW / opgw1461	3768	-26690	0	0	0	1,461	3,768	-26,69	-1454,28	206,42261	1,461	-26,69	3,768											
	Comp. gl 3029	5865	-46147	0	0	0	3,029	5,865	-46,147	-992,161	132,41902	3,029	-46,147	5,865											
1b	380C1F1 / 11173	9385	-146964	0	0	0	11,173	9,385	-146,964	-6760,34	431,71	11,173	-146,964	9,385	1b	-18354,1	1164,297	38,003	-496,917	31,153					
Wind, -20 dgr	380C1F2 / 11172	9139	-146503	0	0	0	11,172	9,139	-146,503	-5493,86	342,7125	11,172	-146,503	9,139	Wind angle: 45 dgr										
Permanent loads y	380C1F3 / 11172	8830	-145971	0	0	0	11,172	8,83	-145,971	-4233,16	256,07	11,172	-145,971	8,83											
Wind angle: 45 dg	GW / opgw1459	1355	-19126	0	0	0	1,459	1,355	-19,126	-1042,14	74,941539	1,459	-19,126	1,355											
	Comp. gl 3027	2444	-38353	0	0	0	3,027	2,444	-38,353	-824,59	58,863349	3,027	-38,353	2,444											
3	380C1F1 / 21961	17878	-219437	0	0	0	21,961	17,878	-219,437	-10094,1	822,388	21,961	-219,437	17,878	3	-30148	2452,965	88,797	-825,815	65,51					
Wind+ice, -5 dgr	380C1F2 / 21960	17185	-218037	0	0	0	21,96	17,185	-218,037	-8176,39	644,4375	21,96	-218,037	17,185	Wind angle: 45 dgr										
Permanent loads y	380C1F3 / 21960	16316	-216409	0	0	0	21,96	16,316	-216,409	-6275,86	473,164	21,96	-216,409	16,316											
Wind angle: 45 dg	GW / opgw7596	5196	-57751	0	0	0	7,596	5,196	-57,751	-3146,74	288,9002	7,596	-57,751	5,196											
	Comp. gl 15320	8935	-114181	0	0	0	15,32	8,935	-114,181	-2454,89	224,07534	15,32	-114,181	8,935											
4	380C1F1 / 14184	9399	-147257	0	0	0	14,184	9,399	-147,257	-6773,82	432,354	14,184	-147,257	9,399	4	-18709,5	1183,722	49,294	-507,905	31,638					
Construction/maintenance, +514184	9159	-146926	0	0	0	14,184	9,159	-146,926	-5509,73	343,4625	14,184	-146,926	9,159	Wind angle: 45 dgr											
Permanent loads y	380C1F3 / 14184	8857	-146544	0	0	0	14,184	8,857	-146,544	-4249,78	256,853	14,184	-146,544	8,857											
Wind angle: 45 dg	GW / opgw2211	1489	-22185	0	0	0	2,211	1,489	-22,185	-1208,82	82,815203	2,211	-22,185	1,489											
	Comp. gl 4531	2734	-44993	0	0	0	4,531	2,734	-44,993	-967,35	68,237197	4,531	-44,993	2,734											
1a	380C1F1 / 11188	37902	-243059	0	0	0	11,188	37,902	-243,059	-11180,7	1743,492	11,188	-243,059	37,902	1a	-29677	4571,349	38,053	-795,297	121,66					
Wind, 10 dgr	380C1F2 / 11187	35313	-231406	0	0	0	11,187	35,313	-231,406	-8677,73	1324,2375	11,187	-231,406	35,313	Wind angle: 90 dgr										
Permanent loads y	380C1F3 / 11186	32039	-216560	0	0	0	11,186	32,039	-216,56	-6280,24	929,131	11,186	-216,56	32,039											
Wind angle: 90 dg	GW / opgw1462	6497	-39301	0	0	0	1,462	6,497	-39,301	-2141,43	355,12112	1,462	-39,301	6,497											
	Comp. gl 3030	9909	-64971	0	0	0	3,03	9,909	-64,971	-1396,88	219,36711	3,03	-64,971	9,909											
1b	380C1F1 / 11173	12178	-154081	0	0	0	11,173	12,178	-154,081	-7087,73	560,188	11,173	-154,081	12,178	1b	-19186,5	1497,921	38,005	-518,673	40,011					
Wind, -20 dgr	380C1F2 / 11173	11700	-152650	0	0	0	11,173	11,7	-152,65	-5724,38	438,75	11,173	-152,65	11,7	Wind angle: 90 dgr										
Permanent loads y	380C1F3 / 11173	11103	-150973	0	0	0	11,173	11,103	-150,973	-4378,22	321,987	11,173	-150,973	11,103											
Wind angle: 90 dg	GW / opgw1459	1862	-20775	0	0	0	1,459	1,862	-20,775	-1131,99	102,56696	1,459	-20,775	1,862											
	Comp. gl 3027	3168	-40194	0	0	0	3,027	3,168	-40,194	-864,171	74,429349	3,027	-40,194	3,168											
3	380C1F1 / 21964	25723	-240154	0	0	0	21,964	25,723	-240,154	-11047,1	1183,258	21,964	-240,154	25,723	3	-32591,3	3478,916	88,809	-889,824	92,943					
Wind+ice, -5 dgr	380C1F2 / 21963	24386	-236112	0	0	0	21,963	24,386	-236,112	-8854,2	914,475	21,963	-236,112	24,386	Wind angle: 90 dgr										
Permanent loads y	380C1F3 / 21962	22711	-231302	0	0	0	21,962	22,711	-231,302	-6707,76	658,619	21,962	-231,302	22,711											
Wind angle: 90 dg	GW / opgw7598	7644	-62562	0	0	0	7,598	7,644	-62,562	-3408,88	422,28835	7,598	-62,562	7,644											
	Comp. gl 15322	12479	-119694	0	0	0	15,322	12,479	-119,694	-2573,42	300,27551	15,322	-119,694	12,479											
4	380C1F1 / 14184	12112	-152494	0	0	0	14,184	12,112	-152,494	-7014,72	557,152	14,184	-152,494	12,112	4	-19302,8	1507,117	49,295	-523,376	40,227					
Construction/maintenance, +514184	11650	-151426	0	0	0	14,184	11,65	-151,426	-5678,48	436,875	14,184	-151,426	11,65	Wind angle: 90 dgr											
Permanent loads y	380C1F3 / 14184	11071	-150183	0	0	0	14,184	11,071	-150,183	-4355,31	321,059	14,184	-150,183	11,071											
Wind angle: 90 dg	GW / opgw2212	1968	-23187	0	0	0	2,212	1,968	-23,187	-1263,41	108,91572	2,212	-23,187	1,968											
	Comp. gl 4531	3426	-46086	0	0	0	4,531	3,426	-46,086	-990,849	83,115197	4,531	-46,086	3,426											
1a	380C1F1 / 11181	19444	-159676	0	0	0	11,181	19,444	-159,676	-7345,1	894,424	11,181	-159,676	19,444	1a	-19687,6	2360,675	38,031	-529,716	62,861					
Wind, 10 dgr	380C1F2 / 11181	18273	-154641	0	0	0	11,181	18,273	-154,641	-5799,04	685,2375	11,181	-154,641	18,273	Wind angle: -45 dgr										
Permanent loads y	380C1F3 / 11180	16805	-148484	0	0	0	11,18	16,805	-148,484	-4306,04	487,345	11,18	-148,484	16,805											
Wind angle: -45 d	GW / opgw1460	3242	-24215	0	0	0	1,46	3,242	-24,215	-1319,43	177,76116	1,46	-24,215	3,242											
	Comp. gl 3029	5097	-42700	0	0	0	3,029	5,097	-42,7	-918,05	115,90702	3,029	-42,7	5,097											
1b	380C1F1 / 11172	8868	-146034	0	0	0	11,172	8,868	-146,034	-6717,56	407,928	11,172	-146,034	8,868	1b	-18245,5	1102,517	38,002	-494,086	29,512					
Wind, -20 dgr	380C1F2 / 11172	8664	-145707	0	0	0	11,172	8,664	-145,707	-5464,01	324,9	11,172	-145,707	8,664	Wind angle: -45 dgr										
Permanent loads y	380C1F3 / 11172	8408	-145330	0	0	0	11,172	8,408	-145,33	-4214,57	243,832	11,172	-145,33	8,408											
Wind angle: -45 d	GW / opgw1459	1262	-18902	0	0	0	1,459	1,262	-18,902	-1029,93	69,874155	1,459	-18,902	1,262											
	Comp. gl 3027	2310	-38113	0	0	0	3,027	2,31	-38,113	-819,43	55,982349	3,027	-38,113	2,31											
3	380C1F1 / 21960	16424	-216603	0	0	0	21,96	16,424	-216,603	-9963,74	755,504	21,96	-216,603	16,424	3	-29818	2262,395	88,795	-817,197	60,412					
Wind+ice, -5 dgr	380C1F2 / 21960	15850	-215596	0	0	0	21,96	15,85	-215,596	-8084,85	594,375	21,96	-215,596	15,85	Wind angle: -45 dgr										
Permanent loads y	380C1F3 / 21960	15129	-214430	0	0	0	21,96	15,129	-214,43	-6218,47	438,741	21,96	-214,43	15,129											
Wind angle: -45 d	GW / opgw7596	4739	-57102	0	0	0	7,596	4,739	-57,102	-3111,37	263,99919	7,596	-57,102	4,739											
0 Comp. gl	15319	8270	-113466	0	0	0	15,319	8,27	-113,466	-2439,52	209,77575	15,319	-113,466	8,27											
4	380C1F1 / 14184	8894	-146589	0	0	0	14,184	8,894	-146,589	-6743,09	409,124	14,184	-146,589	8,894	4	-18634,1	1123,396	49,294	-505,942	30,035					
Construction/maintenance, +514184	8694	-146355	0	0	0	14,184	8,694	-146,355	-5488,31	326,025	14,184	-146,355	8,694	Wind angle: -45 dgr											
Permanent loads y	380C1F3 / 14184	8442	-146086	0	0	0	14,184	8,442	-146,086	-4236,49	244,818	14,184	-146,086	8,442											
Wind angle: -45 d	GW / opgw2211	1400	-22056	0	0	0	2,211	1,4	-22,056	-1201,79	77,965771	2,211	-22,056	1,4											
	Comp. gl 4531	2605	-44856	0	0	0	4,531	2,605	-44,856	-964,404	65,463697	4,531	-44,856	2,605											

W2E350+5 05 - F2

Hoogte mast		55 m			
Hoogte onderste stroomdraad (F3)		29 m			
		Hoogte		Excentriciteit ophanging t.o.v. hart mast	
Bliksemdraad = GW / CH_{mast} -	0,512 m =	54,488 m		0,761 m	
1e traverse - 380C1F1 F2 +	8,5 m =	46 m		0 m	
2e traverse - 380C1F2 F3 +	8,5 m =	37,5 m		0 m	
3e traverse - 380C1F3		29 m		0 m	
Passieve lijn = Comp C. F3 -	7,5 m =	21,5 m		2,087 m	

			Belastingen uit lijnen M_{langs}	M_{dwars}	N	V_{langs}	V_{dwars}	Belasting uit mast N	V	M
Perm load 1,2	0 deg	1a	**-15985**	**710**	42	**-433**	**19**	562	68	1743
		1b	-19294	852	**42**	-523	23	562	68	1743
		3	-26213	1176	76	-718	31	562	68	1743
		4	-18603	824	50	-505	22	562	68	1743
	45 deg	1a	-19033	2025	42	-513	54	562	68	1743
		1b	-19434	1094	**42**	-526	29	562	68	1743
		3	-26822	1932	76	-733	52	562	68	1743
		4	-18711	1065	50	-508	28	562	68	1743
	90 deg	1a	-24081	**3238**	42	-647	**86**	562	68	1743
		1b	-19771	1307	**42**	-535	35	562	68	1743
		3	**-28209**	2605	**76**	**-770**	70	562	68	1743
		4	-18976	1275	50	-515	34	562	68	1743
	-45 deg	1a	-18221	1800	42	-492	48	562	68	1743
		1b	-19392	1054	**42**	-525	28	562	68	1743
		3	-26641	1807	76	-729	48	562	68	1743
		4	-18678	1025	50	-507	27	562	68	1743

Uit mast			Uit lijnen				
ULS (incl bel factoren)			SLS				
N	V	M	Nmin	Nmax	Vmax	Mlangs;max	Mdwars;max
[kN]	[kN]	[kNm]	[kN]	[kN]	[kN]	[kNm]	[kNm]
674	102	2615	42	76	770	28209	3238

regel		Loadcase	M_{langs}	M_{dwars}	N	V_{langs}	V_{dwars}	Totaal moment	M langs max	M dwars ma	N max	V langs max	V dwars ma	M tot max	N min
1	Perm load 1,2	0 deg 1a	17729	2454	604	501	87	17897,56	1						
2	Perm load 1,2	0 deg 1b	21038	2595	604	591	91	21197,25	2						x
3	Perm load 1,2	0 deg 3	27956	2919	638	786	99	28107,86	3						
4	Perm load 1,2	0 deg 4	20346	2567	611	573	90	20507,68	4						
5									5						
6	Perm load 1,2	45 deg 1a	20777	3769	604	581	122	21115,8	6						
7	Perm load 1,2	45 deg 1b	21177	2837	604	594	97	21366,61	7						x
8	Perm load 1,2	45 deg 3	28565	3675	638	801	120	28800,83	8						
9	Perm load 1,2	45 deg 4	20454	2808	611	576	96	20645,79	9						
10									10						
11	Perm load 1,2	90 deg 1a	25824	4981	604	715	154	26300,41	11	x		x			
12	Perm load 1,2	90 deg 1b	21515	3050	604	603	103	21729,78	12						x
13	Perm load 1,2	90 deg 3	29952	4348	638	838	138	30266,13	13	x	x	x	x		
14	Perm load 1,2	90 deg 4 Construct	20720	3018	611	583	102	20938,18	14						
15									15						
16	Perm load 1,2	-45 deg 1a	19454	3543	604	560	116	19774,05	16						
17	Perm load 1,2	-45 deg 1b	20624	2797	604	593	96	20813,3	17						x
18	Perm load 1,2	-45 deg 3	27874	3550	638	797	116	28098,91	18						
19	Perm load 1,2	-45 deg 4	19910	2769	611	575	95	20101,88	19						
			29952	4981	638	838	154	30266							
					604										

samenvatting

	Mast	Bijlage		Wind	Loadcase	M_{langs}	M_{dwars}	N	V_{langs}	V_{dwars}
2	W2E350+5 05-F2	Perm load :0 deg	1b			21038	2595	604	591	91
11	W2E350+5 05-F2	Perm load :90 deg	1a			25824	4981	604	715	154
13	W2E350+5 05-F2	Perm load :90 deg			3	29952	4348	638	838	138
	W2E350+5 05-F2	#N/B	#N/B	#N/B	#N/B	#N/B	#N/B	#N/B	#N/B	#N/B
	W2E350+5 05-F2	#N/B	#N/B	#N/B	#N/B	#N/B	#N/B	#N/B	#N/B	#N/B
	W2E350+5 05-F2	#N/B	#N/B	#N/B	#N/B	#N/B	#N/B	#N/B	#N/B	#N/B

W2E350 + 5 TOWER (rev 6.0, date: 05-11-2 Appendix: F2
W2E350 + 5 TOWER (rev 6.0, date: 05-11-2 Appendix: F2
Loadcase according to 50341-3-15

	Attachment	BACK [N]	[N]	[N]	AHEAD [N]	[N]	[N]	Totaal Vert [kN]	Dwars [kN]	Langs [kN]
1a	380C1F1 / 12421	5598	-127433	0	0	0		12,421	5,598	-127,433
Wind, 10 d	380C1F2 / 12421	5596	-127433	0	0	0		12,421	5,596	-127,433
Permanent	380C1F3 / 12421	5593	-127433	0	0	0		12,421	5,593	-127,433
Wind angle	GW / opgw 1622	733	-16643	0	0	0		1,622	0,733	-16,643
	Comp. gl 3365	1516	-34520	0	0	0		3,365	1,516	-34,52
1b	380C1F1 / 12415	6739	-154196	0	0	0		12,415	6,739	-154,196
Wind, -20 c	380C1F2 / 12415	6739	-154196	0	0	0		12,415	6,739	-154,196
Permanent	380C1F3 / 12415	6738	-154196	0	0	0		12,415	6,738	-154,196
Wind angle	GW / opgw 1621	865	-19778	0	0	0		1,621	0,865	-19,778
	Comp. gl 3363	1768	-40455	0	0	0		3,363	1,768	-40,455
3	380C1F1 / 19607	8468	-193497	0	0	0		19,607	8,468	-193,497
Wind+ice,	380C1F2 / 19607	8466	-193497	0	0	0		19,607	8,466	-193,497
Permanent	380C1F3 / 19607	8464	-193497	0	0	0		19,607	8,464	-193,497
Wind angle	GW / opgw 5711	1989	-45404	0	0	0		5,711	1,989	-45,404
	Comp. gl 11555	4010	-91636	0	0	0		11,555	4,01	-91,636
4	380C1F1 / 14424	6420	-146877	0	0	0		14,424	6,42	-146,877
Constructi	380C1F2 / 14424	6419	-146877	0	0	0		14,424	6,419	-146,877
Permanent	380C1F3 / 14424	6419	-146877	0	0	0		14,424	6,419	-146,877
Wind angle	GW / opgw 2123	922	-21079	0	0	0		2,123	0,922	-21,079
	Comp. gl 4367	1892	-43294	0	0	0		4,367	1,892	-43,294
1a	380C1F1 / 12423	16603	-153485	0	0	0		12,423	16,603	-153,485
Wind, 10 d	380C1F2 / 12423	15702	-150118	0	0	0		12,423	15,702	-150,118
Permanent	380C1F3 / 12422	14574	-146083	0	0	0		12,422	14,574	-146,083
Wind angle	GW / opgw 1623	2713	-22404	0	0	0		1,623	2,713	-22,404
	Comp. gl 3365	4367	-41236	0	0	0		3,365	4,367	-41,236
1b	380C1F1 / 12415	8764	-155393	0	0	0		12,415	8,764	-155,393
Wind, -20 c	380C1F2 / 12415	8605	-155213	0	0	0		12,415	8,605	-155,213
Permanent	380C1F3 / 12415	8406	-155006	0	0	0		12,415	8,406	-155,006
Wind angle	GW / opgw 1621	1223	-20077	0	0	0		1,621	1,223	-20,077
	Comp. gl 3363	2293	-40762	0	0	0		3,363	2,293	-40,762
3	380C1F1 / 19607	14201	-198583	0	0	0		19,607	14,201	-198,583
Wind+ice,	380C1F2 / 19607	13747	-197838	0	0	0		19,607	13,747	-197,838
Permanent	380C1F3 / 19607	13178	-196976	0	0	0		19,607	13,178	-196,976
Wind angle	GW / opgw 5711	3828	-46848	0	0	0		5,711	3,828	-46,848
	Comp. gl 11555	6700	-93178	0	0	0		11,555	6,7	-93,178
4	380C1F1 / 14424	8434	-147824	0	0	0		14,424	8,434	-147,824
Constructi	380C1F2 / 14424	8277	-147680	0	0	0		14,424	8,277	-147,68
Permanent	380C1F3 / 14424	8080	-147515	0	0	0		14,424	8,08	-147,515
Wind angle	GW / opgw 2123	1276	-21280	0	0	0		2,123	1,276	-21,28
	Comp. gl 4367	2413	-43500	0	0	0		4,367	2,413	-43,5
1a	380C1F1 / 12427	26747	-196063	0	0	0		12,427	26,747	-196,063
Wind, 10 d	380C1F2 / 12426	25033	-188534	0	0	0		12,426	25,033	-188,534
Permanent	380C1F3 / 12425	22875	-179172	0	0	0		12,425	22,875	-179,172
Wind angle	GW / opgw 1623	4523	-30615	0	0	0		1,623	4,523	-30,615
	Comp. gl 3366	7004	-52466	0	0	0		3,366	7,004	-52,466
1b	380C1F1 / 12415	10545	-158280	0	0	0		12,415	10,545	-158,28
Wind, -20 c	380C1F2 / 12415	10242	-157685	0	0	0		12,415	10,242	-157,685
Permanent	380C1F3 / 12415	9862	-156996	0	0	0		12,415	9,862	-156,996
Wind angl	GW / opgv 1621	1544	-20775	0	0	0		1,621	1,544	-20,775
	Comp. gl 3363	2754	-41506	0	0	0		3,363	2,754	-41,506
3	380C1F1 / 19609	19327	-210048	0	0	0		19,609	19,327	-210,048
Wind+ice,	380C1F2 / 19609	18453	-207752	0	0	0		19,609	18,453	-207,752
Permanen	380C1F3 / 19608	17359	-205055	0	0	0		19,608	17,359	-205,055
Wind angl	GW / opgv 5712	5459	-50066	0	0	0		5,712	5,459	-50,066
	Comp. gl 11556	9059	-96804	0	0	0		11,556	9,059	-96,804
4	380C1F1 / 14425	10192	-150154	0	0	0		14,425	10,192	-150,154
Constructi	380C1F2 / 14425	9894	-149671	0	0	0		14,425	9,894	-149,671
Permanen	380C1F3 / 14424	9520	-149114	0	0	0		14,424	9,52	-149,114
Wind angl	GW / opgv 2123	1587	-21763	0	0	0		2,123	1,587	-21,763
	Comp. gl 4367	2864	-44015	0	0	0		4,367	2,864	-44,015
1a	380C1F1 / 12422	14713	-146571	0	0	0		12,422	14,713	-146,571
Wind, 10 c	380C1F2 / 12422	13968	-144014	0	0	0		12,422	13,968	-144,014
Permanen	380C1F3 / 12422	13036	-140978	0	0	0		12,422	13,036	-140,978
Wind angl	GW / opgv 1622	2372	-20964	0	0	0		1,622	2,372	-20,964
	Comp. gl 3365	3877	-39438	0	0	0		3,365	3,877	-39,438
1b	380C1F1 / 12415	8430	-155030	0	0	0		12,415	8,43	-155,03
Wind, -20 c	380C1F2 / 12415	8298	-154904	0	0	0		12,415	8,298	-154,904
Permanen	380C1F3 / 12415	8132	-154758	0	0	0		12,415	8,132	-154,758
Wind angl	GW / opgv 1621	1164	-19988	0	0	0		1,621	1,164	-19,988
	Comp. gl 3363	2206	-40669	0	0	0		3,363	2,206	-40,669
3	380C1F1 / 19607	13249	-197078	0	0	0		19,607	13,249	-197,078
Wind+ice,	380C1F2 / 19607	12872	-196548	0	0	0		19,607	12,872	-196,548
Permanen	380C1F3 / 19607	12399	-195937	0	0	0		19,607	12,399	-195,937
Wind angl	GW / opgv 5711	3523	-46421	0	0	0		5,711	3,523	-46,421
	Comp. gl 11555	6258	-92713	0	0	0		11,555	6,258	-92,713
4	380C1F1 / 14424	8104	-147534	0	0	0		14,424	8,104	-147,534
Constructi	380C1F2 / 14424	7973	-147433	0	0	0		14,424	7,973	-147,433
Permanen	380C1F3 / 14424	7808	-147318	0	0	0		14,424	7,808	-147,318
Wind angl	GW / opgv 2123	1218	-21219	0	0	0		2,123	1,218	-21,219
	Comp. gl 4367	2327	-43436	0	0	0		4,367	2,327	-43,436

Belastingen op mastvoet, per lijn

	M_{langs}	M_{dwars}	N	V_{langs}	V_{dwars}
	-5861,92	257,508	12,421	-127,433	5,598
	-4778,74	209,85	12,421	-127,433	5,596
	-3695,56	162,197	12,421	-127,433	5,593
	-906,844	41,17405	1,622	-16,643	0,733
	-742,18	39,61676	3,365	-34,52	1,516
	-7093,02	309,994	12,415	-154,196	6,739
	-5782,35	252,7125	12,415	-154,196	6,739
	-4471,68	195,402	12,415	-154,196	6,738
	-1077,66	48,3657	1,621	-19,778	0,865
	-869,783	45,03058	3,363	-40,455	1,768
	-8900,86	389,528	19,607	-193,497	8,468
	-7256,14	317,475	19,607	-193,497	8,466
	-5611,41	245,456	19,607	-193,497	8,464
	-2473,97	112,7227	5,711	-45,404	1,989
	-1970,17	110,3303	11,555	-91,636	4,01
	-6756,34	295,32	14,424	-146,877	6,42
	-5507,89	240,7125	14,424	-146,877	6,419
	-4259,43	186,151	14,424	-146,877	6,419
	-1148,55	51,85354	2,123	-21,079	0,922
	-930,821	49,79193	4,367	-43,294	1,892
	-7060,31	763,738	12,423	-153,485	16,603
	-5629,43	588,825	12,423	-150,118	15,702
	-4236,41	422,646	12,422	-146,083	14,574
	-1220,75	149,061	1,623	-22,404	2,713
	-886,574	100,9133	3,365	-41,236	4,367
	-7148,08	403,144	12,415	-155,393	8,764
	-5820,49	322,6875	12,415	-155,213	8,605
	-4495,17	243,774	12,415	-155,006	8,406
	-1093,96	67,87241	1,621	-20,077	1,223
	-876,383	56,31808	3,363	-40,762	2,293
	-9134,82	653,246	19,607	-198,583	14,201
	-7418,93	515,5125	19,607	-197,838	13,747
	-5712,3	382,162	19,607	-196,976	13,178
	-2552,65	212,9261	5,711	-46,848	3,828
	-2003,33	168,1653	11,555	-93,178	6,7
	-6799,9	387,964	14,424	-147,824	8,434
	-5538	310,3875	14,424	-147,68	8,277
	-4277,94	234,32	14,424	-147,515	8,08
	-1159,5	71,14229	2,123	-21,28	1,276
	-935,25	60,99343	4,367	-43,5	2,413
	-9018,9	1230,362	12,427	-196,063	26,747
	-7070,03	938,7375	12,426	-188,534	25,033
	-5195,99	663,375	12,425	-179,172	22,875
	-1668,15	247,6843	1,623	-30,615	4,523
	-1128,02	157,6108	3,366	-52,466	7,004
	-7280,88	485,07	12,415	-158,28	10,545
	-5913,19	384,075	12,415	-157,685	10,242
	-4552,88	285,998	12,415	-156,996	9,862
	-1131,99	85,36305	1,621	-20,775	1,544
	-892,379	66,22958	3,363	-41,506	2,754
	-9662,21	889,042	19,609	-210,048	19,327
	-7790,7	691,9875	19,609	-207,752	18,453
	-5946,6	503,411	19,608	-205,055	17,359
	-2728	301,7968	5,712	-50,066	5,459
	-2081,29	218,8859	11,556	-96,804	9,059
	-6907,08	468,832	14,425	-150,154	10,192
	-5612,66	371,025	14,425	-149,671	9,894
	-4324,31	276,08	14,424	-149,114	9,52
	-1185,82	88,08806	2,123	-21,763	1,587
	-946,323	70,68993	4,367	-44,015	2,864
	-6742,27	676,798	12,422	-146,571	14,713
	-5400,53	523,8	12,422	-144,014	13,968
	-4088,36	378,044	12,422	-140,978	13,036
	-1142,29	130,4799	1,622	-20,964	2,372
	-847,917	90,37826	3,365	-39,438	3,877
	-7131,38	387,78	12,415	-155,03	8,43
	-5808,9	311,175	12,415	-154,904	8,298
	-4487,98	235,828	12,415	-154,758	8,132
	-1089,11	64,65761	1,621	-19,988	1,164
	-874,384	54,44758	3,363	-40,669	2,206
	-9065,59	609,454	19,607	-197,078	13,249
	-7370,55	482,7	19,607	-196,548	12,872
	-5682,17	359,571	19,607	-195,937	12,399
	-2529,39	196,3073	5,711	-46,421	3,523
	-1993,33	158,6623	11,555	-92,713	6,258
	-6786,56	372,784	14,424	-147,534	8,104
	-5528,74	298,9875	14,424	-147,433	7,973
	-4272,22	226,432	14,424	-147,318	7,808
	-1156,18	67,98199	2,123	-21,219	1,218
	-933,874	59,14443	4,367	-43,436	2,327

Belasting op mastvoet, belastinggeval

		M_{langs}	M_{dwars}	N	V_{langs}	V_{dwars}
1a	-15985,2	710,346	42,25	-433,462	19,036	
Wind angle: 0 dgr						
1b	-19294,5	851,505	42,229	-522,821	22,849	
Wind angle: 0 dgr						
3	-26212,6	1175,51	76,087	-717,531	31,397	
Wind angle: 0 dgr						
4	-18603	823,829	49,762	-505,004	22,072	
Wind angle: 0 dgr						
1a	-19033,5	2025,18	42,256	-513,326	53,959	
Wind angle: 45 dgr						
3	-26822	1932,01	76,087	-733,423	51,654	
Wind angle: 45 dgr						
4	-18710,6	1064,81	49,762	-507,799	28,48	
Wind angle: 45 dgr						
1a	-24081,1	3237,77	42,267	-646,85	86,182	
Wind angle: 90 dgr						
1b	-19771,3	1306,74	42,229	-535,242	34,947	
Wind angle: 90 dgr						
3	-28208,8	2605,12	76,094	-769,725	69,657	
Wind angle: 90 dgr						
4	-18976,2	1274,71	49,764	-514,717	34,057	
Wind angle: 90 dgr						
1a	-18221,4	1799,5	42,253	-491,965	47,966	
Wind angle: -45 dgr						
1b	-19391,8	1053,89	42,229	-525,349	28,23	
Wind angle: -45 dgr						
3	-26641	1806,69	76,087	-728,697	48,301	
Wind angle: -45 dgr						
4	-18677,6	1025,33	49,762	-506,94	27,43	
Wind angle: -45 dgr						

W2E400 | 07-L

Hoogte mast				57	m		
Hoogte onderste stroomdraad (F3)				28	m		
				Hoogte		Excentriciteit ophanging t.o.v. hart mast	
Bliksemdraad = GW / OPGW	H_{mast} -	0,57	m =	56,43	m	0,76	m
1e traverse - 380C1F1	F2 +	10	m =	48	m	0	m
2e traverse - 380C1F2	F3 +	10	m =	38	m	0	m
3e traverse - 380C1F3				28	m	0	m
Passieve lijn = Comp C.	F3 -	7,5	m =	20,5	m	1,358	m

Uit mast (excl belastingsfactoren)			Uit lijnen (incl belastingsfactoren)				
N	V	M	Nmin	Nmax	Vmax	Mlangs;ma	Mdwars;max
[kN]	[kN]	[kNm]	[kN]	[kN]	[kN]	[kNm]	[kNm]
761	104	2789	43	116	978	36248	5038

		Belastingen uit lijnen							Belasting uit mast		
				M_{langs}	M_{dwars}	N	V_{langs}	V_{dwars}	N	V	M
Perm load 1,2	0 deg	1a		-18764	834	58	-503	22	761	104	2789
		1b		-21518	949	58	-576	25	761	20	523
			3	-33150	1484	116	-899	39	761	29	784
			4	-22036	974	69	-591	26	761	20	523
			6	-20630	910	65	-553	24			
	45 deg	1a		-23888	3036	58	-634	79	761	104	2789
		1b		-21769	1355	58	-583	36	761	20	523
			3	-34103	2746	116	-923	72	761	29	784
			4	-22225	1378	69	-596	36	761	20	523
	90 deg	1a		-31708	**5038**	58	-836	**131**	761	104	2789
		1b		-22367	1713	58	-598	45	761	20	523
			3	**-36248**	3864	**116**	**-978**	102	761	29	784
			4	-22687	1730	69	-608	46	761	20	523
	-45 deg	1a		-22569	2660	58	-600	70	761	104	2789
		1b		-21693	1288	58	-581	34	761	20	523
			3	-33821	2537	116	-916	67	761	29	784
			4	-22167	1312	69	-595	35	761	20	523
Perm load 0,9	0 deg	1a		**-14829**	660	43	**-397**	18	571	104	2789
		1b		-17377	766	**43**	-465	20	571	20	523
			3	-29866	1339	102	-812	36	571	29	784
			4	-18275	808	55	-491	21	571	20	523
			6	-14829	**653**	43	-397	**17**			
	45 deg	1a		-21433	2926	43	-567	76	571	104	2789
		1b		-17748	1177	**43**	-475	31	571	20	523
			3	-31014	2609	102	-841	69	571	29	784
			4	-18536	1215	55	-497	32	571	20	523
	90 deg	1a		-30236	4972	44	-796	130	571	104	2789
		1b		-18596	1546	43	-496	41	571	20	523
			3	-33522	3742	102	-904	98	571	29	784
			4	-19153	1573	55	-513	41	571	20	523
	-45 deg	1a		-19841	2538	43	-526	66	571	104	2789
		1b		-17638	1109	**43**	-472	29	571	20	523
			3	-30677	2398	102	-832	63	571	29	784
			4	-18457	1148	55	-495	30	571	20	523

regel				Totaal													
			Loadcase	M_{langs}	M_{dwars}	N	V_{langs}	V_{dwars}	Totaal moment		M_{langs}	M_{dwars}	N	V_{langs}	V_{dwars}	Totaal mom	Nmin
1	Perm load 1,2	0 deg	1a	21553	834	819	607	22	21569,08	1							
2	Perm load 1,2	0 deg	1b	22041	949	819	596	25	22061,09	2							
3	Perm load 1,2	0 deg	3	33934	1484	877	929	39	33966,79	3							
4	Perm load 1,2	0 deg	4	22559	974	830	611	26	22579,95	4							
5	Perm load 1,2	0 deg	6							5							
6										6							
7	Perm load 1,2	45 deg	1a	25860	5008	819	707	153	26340,71	7							
8	Perm load 1,2	45 deg	1b	22139	1725	819	596	50	22206,01	8							
9	Perm load 1,2	45 deg	3	34658	3300	877	944	93	34814,61	9							
10	Perm load 1,2	45 deg	4	22595	1748	830	610	50	22662,37	10							
11										11							
12	Perm load 1,2	90 deg	1a	34497	5038	819	940	235	34862,62	12		x			x		
13	Perm load 1,2	90 deg	1b	22890	1713	819	617	65	22954,37	13							
14	Perm load 1,2	90 deg	3	37033	3864	877	1007	131	37233,84	14	x		x	x		x	
15	Perm load 1,2	90 deg	4 Construct	23210	1730	830	627	65	23274,32	15							
16										16							
17	Perm load 1,2	-45 deg	1a	24541	4632	819	673	143	24974,5	17							
18	Perm load 1,2	-45 deg	1b	22063	1658	819	595	48	22125,34	18							
19	Perm load 1,2	-45 deg	3	34375	3092	877	937	88	34514	19							
20	Perm load 1,2	-45 deg	4	22537	1681	830	608	48	22599,78	20							
21										21							
22	Perm load 0,9	0 deg	1a	17618	660	614	501	18	17629,94	22							
23	Perm load 0,9	0 deg	1b	17900	766	614	485	20	17916,03	23							x
24	Perm load 0,9	0 deg	3	30650	1339	672	841	36	30679,32	24							
25	Perm load 0,9	0 deg	4	18798	808	626	510	21	18815,7	25							
26	Perm load 0,9	0 deg	6							26							
27										27							
28	Perm load 0,9	45 deg	1a	23405	4898	614	640	150	23912,34	28							
29	Perm load 0,9	45 deg	1b	18118	1547	614	489	45	18183,81	29							x
30	Perm load 0,9	45 deg	3	31569	3163	672	861	89	31726,62	30							
31	Perm load 0,9	45 deg	4 Construct	18905	1584	626	511	46	18971,65	31							
32										32							
33	Perm load 0,9	90 deg	1a	33025	4972	614	900	234	33396,95	33							
34	Perm load 0,9	90 deg	1b	19119	1546	614	516	60	19181,53	34							
35	Perm load 0,9	90 deg	3	34306	3742	672	934	128	34509,69	35							
36	Perm load 0,9	90 deg	4	19676	1573	626	532	61	19738,63	36							
37										37							
38	Perm load 0,9	-45 deg	1a	21813	4510	614	599	140	22274,12	38							
39	Perm load 0,9	-45 deg	1b	18008	1479	614	486	43	18068,29	39							x
40	Perm load 0,9	-45 deg	3	31232	2952	672	853	84	31370,85	40							
41	Perm load 0,9	-45 deg	4	18827	1517	626	509	44	18888,12	41							
			Max	37033	5038	877	1007	235	37234								
						614											

samenvatting

	Mast	Bijlage		Wind	Loadcase	M_{langs}	M_{dwars}	N	V_{langs}	V_{dwars}
12	W2E400	07-L	Perm load :	90 deg	1a	34497	5038	819	940	235
14	W2E400	07-L	Perm load :	90 deg	3	37033	3864	877	1007	131
29	W2E400	07-L	Perm load (	45 deg	1b	18118	1547	614	489	45

W2E400 TOWER (rev 6.0, date: 05-11-2012 Appendix L

Loadcases for tower strength (ultimate limit state)

Loadcase	Attachment point		**BACK**			**AHEAD**		Totaal Vert	Dwars	Langs	Belastingen op mastvoet, per lijn M_{langs}	M_{dwars}	N	V_{langs}	V_{dwars}	Belasting op mastvoet, belastinggeval	M_{langs}	M_{dwars}	N	V_{langs}	V_{dwars}
		[N]	[N]	[N]	[N]	[N]	[N]	[kN]	[kN]	[kN]											
1a	380C1F1 / 380C2F1	17045	6511	-147783	0	0	0	17,045	6,511	-147,783	-7093,58	312,528	17,045	-147,783	6,511	1a	-18763,9	834,1512	57,978	-502,882	22,137
Wind, 10 c	380C1F2 / 380C2F2	17045	6505	-147783	0	0	0	17,045	6,505	-147,783	-5615,75	247,19	17,045	-147,783	6,505	Wind angle:	0 dgr				
Permanen	380C1F3 / 380C2F3	17045	6498	-147784	0	0	0	17,045	6,498	-147,784	-4137,95	181,944	17,045	-147,784	6,498						
Wind angl	GW / opgw	2226	856	-19378	0	0	0	2,226	0,856	-19,378	-1093,5	49,99584	2,226	-19,378	0,856						
	Comp. gl	4617	1767	-40154	0	0	0	4,617	1,767	-40,154	-823,157	42,49339	4,617	-40,154	1,767						
1b	380C1F1 / 380C2F1	17036	7424	-169771	0	0	0	17,036	7,424	-169,771	-8149,01	356,352	17,036	-169,771	7,424	1b	-21517,7	948,8069	57,948	-576,36	25,2
Wind, -20	380C1F2 / 380C2F2	17036	7423	-169771	0	0	0	17,036	7,423	-169,771	-6451,3	282,074	17,036	-169,771	7,423	Wind angle:	0 dgr				
Permanen	380C1F3 / 380C2F3	17036	7421	-169771	0	0	0	17,036	7,421	-169,771	-4753,59	207,788	17,036	-169,771	7,421						
Wind angl	GW / opgw	2225	961	-21970	0	0	0	2,225	0,961	-21,97	-1239,77	55,92023	2,225	-21,97	0,961						
	Comp. gl	4615	1971	-45077	0	0	0	4,615	1,971	-45,077	-924,079	46,67267	4,615	-45,077	1,971						
3	380C1F1 / 380C2F1	29376	10453	-238677	0	0	0	29,376	10,453	-238,677	-11456,5	501,744	29,376	-238,677	10,453	3	-33149,9	1483,99	116,048	-899,305	39,376
Wind+ice,	380C1F2 / 380C2F2	29376	10450	-238677	0	0	0	29,376	10,45	-238,677	-9069,73	397,1	29,376	-238,677	10,45	Wind angle:	0 dgr				
Permanen	380C1F3 / 380C2F3	29376	10446	-238678	0	0	0	29,376	10,446	-238,678	-6682,98	292,488	29,376	-238,678	10,446						
Wind angl	GW / opgw	9244	2664	-60775	0	0	0	9,244	2,664	-60,775	-3429,53	157,355	9,244	-60,775	2,664						
	Comp. gl	18676	5363	-122498	0	0	0	18,676	5,363	-122,498	-2511,21	135,3035	18,676	-122,498	5,363						
4	380C1F1 / 380C2F1	20053	7508	-171693	0	0	0	20,053	7,508	-171,693	-8241,26	360,384	20,053	-171,693	7,508	4	-22036	974,0829	69,259	-591,394	25,857
Construction/maintenance, +5 dg		20053	7507	-171693	0	0	0	20,053	7,507	-171,693	-6524,33	285,266	20,053	-171,693	7,507	Wind angle:	0 dgr				
Permanen	380C1F3 / 380C2F3	20053	7505	-171693	0	0	0	20,053	7,505	-171,693	-4807,4	210,14	20,053	-171,693	7,505						
Wind angl	GW / opgw	2978	1094	-25008	0	0	0	2,978	1,094	-25,008	-1411,2	63,9977	2,978	-25,008	1,094						
	Comp. gl	6122	2243	-51307	0	0	0	6,122	2,243	-51,307	-1051,79	54,29518	6,122	-51,307	2,243						
6	380C1F1 / 380C2F1	19177	7092	-162441	0	0	0	19,177	7,092	-162,441	-7797,17	340,416	19,177	-162,441	7,092	6	-20629,8	909,6249	65,231	-552,897	24,139
Permanen	380C1F2 / 380C2F2	19177	7092	-162441	0	0	0	19,177	7,092	-162,441	-6172,76	269,496	19,177	-162,441	7,092	0					
Permanen	380C1F3 / 380C2F3	19177	7092	-162441	0	0	0	19,177	7,092	-162,441	-4548,35	198,576	19,177	-162,441	7,092						
	GW / opgw	2505	932	-21353	0	0	0	2,505	0,932	-21,353	-1204,95	54,49656	2,505	-21,353	0,932						
	Comp. gl	5195	1931	-44221	0	0	0	5,195	1,931	-44,221	-906,531	46,64031	5,195	-44,221	1,931						
1a	380C1F1 / 380C2F1	17050	25061	-192208	0	0	0	17,05	25,061	-192,208	-9225,98	1202,928	17,05	-192,208	25,061	1a	-23888,2	3035,675	57,993	-633,686	79,354
Wind, 10 c	380C1F2 / 380C2F2	17050	23196	-185441	0	0	0	17,05	23,196	-185,441	-7046,76	881,448	17,05	-185,441	23,196	Wind angle:	45 dgr				
Permanen	380C1F3 / 380C2F3	17048	20721	-176872	0	0	0	17,048	20,721	-176,872	-4952,42	580,188	17,048	-176,872	20,721						
Wind angl	GW / opgw	2227	4187	-28949	0	0	0	2,227	4,187	-28,949	-1633,59	237,9649	2,227	-28,949	4,187						
	Comp. gl	4618	6189	-50216	0	0	0	4,618	6,189	-50,216	-1029,43	133,1457	4,618	-50,216	6,189						
1b	380C1F1 / 380C2F1	17036	10840	-171973	0	0	0	17,036	10,84	-171,973	-8254,7	520,32	17,036	-171,973	10,84	1b	-21769,1	1355,066	57,948	-582,701	35,771
Wind, -20	380C1F2 / 380C2F2	17036	10508	-171570	0	0	0	17,036	10,508	-171,57	-6519,66	399,304	17,036	-171,57	10,508	Wind angle:	45 dgr				
Permanen	380C1F3 / 380C2F3	17036	10068	-171092	0	0	0	17,036	10,068	-171,092	-4790,58	281,904	17,036	-171,092	10,068						
Wind angl	GW / opgw	2225	1567	-22512	0	0	0	2,225	1,567	-22,512	-1270,35	90,11681	2,225	-22,512	1,567						
	Comp. gl	4615	2788	-45554	0	0	0	4,615	2,788	-45,554	-933,857	63,42117	4,615	-45,554	2,788						
3	380C1F1 / 380C2F1	29378	20093	-246924	0	0	0	29,378	20,093	-246,924	-11852,4	964,464	29,378	-246,924	20,093	3	-34103,2	2745,803	116,054	-923,396	72,43
Wind+ice,	380C1F2 / 380C2F2	29377	19151	-245449	0	0	0	29,377	19,151	-245,449	-9327,06	727,738	29,377	-245,449	19,151	Wind angle:	45 dgr				
Permanen	380C1F3 / 380C2F3	29377	17902	-243688	0	0	0	29,377	17,902	-243,688	-6823,26	501,256	29,377	-243,688	17,902						
Wind angl	GW / opgw	9245	5751	-62903	0	0	0	9,245	5,751	-62,903	-3549,62	331,5551	9,245	-62,903	5,751						
	Comp. gl	18677	9533	-124432	0	0	0	18,677	9,533	-124,432	-2550,86	220,7899	18,677	-124,432	9,533						
4	380C1F1 / 380C2F1	20053	10904	-173394	0	0	0	20,053	10,904	-173,394	-8322,91	523,392	20,053	-173,394	10,904	4	-22225,1	1377,843	69,259	-596,161	36,365
Construction/maintenance, +5 dg		20053	10576	-173079	0	0	0	20,053	10,576	-173,079	-6577	401,888	20,053	-173,079	10,576	Wind angle:	45 dgr				
Permanen	380C1F3 / 380C2F3	20053	10140	-172707	0	0	0	20,053	10,14	-172,707	-4835,8	283,92	20,053	-172,707	10,14						
Wind angl	GW / opgw	2978	1692	-25363	0	0	0	2,978	1,692	-25,363	-1431,23	97,74284	2,978	-25,363	1,692						
	Comp. gl	6122	3053	-51618	0	0	0	6,122	3,053	-51,618	-1058,17	70,90018	6,122	-51,618	3,053						
1a	380C1F1 / 380C2F1	17058	41910	-258537	0	0	0	17,058	41,91	-258,537	-12409,8	2011,68	17,058	-258,537	41,91	1a	-31707,6	5038,232	58,017	-836,199	131,455
Wind, 10 c	380C1F2 / 380C2F2	17057	38408	-244420	0	0	0	17,057	38,408	-244,42	-9287,96	1459,504	17,057	-244,42	38,408	Wind angle:	90 dgr				
Permanen	380C1F3 / 380C2F3	17054	33730	-225684	0	0	0	17,054	33,73	-225,684	-6319,15	944,44	17,054	-225,684	33,73						
Wind angl	GW / opgw	2228	7175	-41353	0	0	0	2,228	7,175	-41,353	-2333,55	406,5785	2,228	-41,353	7,175						
	Comp. gl	4620	10232	-66205	0	0	0	4,62	10,232	-66,205	-1357,2	216,03	4,62	-66,205	10,232						
1b	380C1F1 / 380C2F1	17037	13853	-177198	0	0	0	17,037	13,853	-177,198	-8505,5	664,944	17,037	-177,198	13,853	1b	-22367,4	1712,814	57,95	-597,848	45,069
Wind, -20	380C1F2 / 380C2F2	17037	13220	-175887	0	0	0	17,037	13,22	-175,887	-6683,71	502,36	17,037	-175,887	13,22	Wind angle:	90 dgr				
Permanen	380C1F3 / 380C2F3	17036	12381	-174315	0	0	0	17,036	12,381	-174,315	-4880,82	346,668	17,036	-174,315	12,381						
Wind angl	GW / opgw	2225	2109	-23747	0	0	0	2,225	2,109	-23,747	-1340,04	120,7019	2,225	-23,747	2,109						
	Comp. gl	4615	3506	-46701	0	0	0	4,615	3,506	-46,701	-957,371	78,14017	4,615	-46,701	3,506						
3	380C1F1 / 380C2F1	29382	28679	-265206	0	0	0	29,382	28,679	-265,206	-12729,9	1376,592	29,382	-265,206	28,679	3	-36248,4	3863,574	116,068	-977,926	101,67
Wind+ice,	380C1F2 / 380C2F2	29381	26874	-260748	0	0	0	29,381	26,874	-260,748	-9908,42	1021,212	29,381	-260,748	26,874	Wind angle:	90 dgr				
Permanen	380C1F3 / 380C2F3	29379	24482	-255296	0	0	0	29,379	24,482	-255,296	-7148,29	685,496	29,379	-255,296	24,482						
Wind angl	GW / opgw	9247	8471	-67631	0	0	0	9,247	8,471	-67,631	-3816,42	485,0463	9,247	-67,631	8,471						
	Comp. gl	18679	13164	-129045	0	0	0	18,679	13,164	-129,045	-2645,42	295,2281	18,679	-129,045	13,164						
4	380C1F1 / 380C2F1	20053	13871	-177524	0	0	0	20,053	13,871	-177,524	-8521,15	665,808	20,053	-177,524	13,871	4	-22687	1729,802	69,259	-607,843	45,516
Construction/maintenance, +5 dg		20053	13249	-176480	0	0	0	20,053	13,249	-176,48	-6706,24	503,462	20,053	-176,48	13,249	Wind angle:	90 dgr				
Permanen	380C1F3 / 380C2F3	20053	12424	-175236	0	0	0	20,053	12,424	-175,236	-4906,61	347,872	20,053	-175,236	12,424						
Wind angl	GW / opgw	2978	2217	-26208	0	0	0	2,978	2,217	-26,208	-1478,92	127,3686	2,978	-26,208	2,217						
	Comp. gl	6122	3755	-52395	0	0	0	6,122	3,755	-52,395	-1074,1	85,29118	6,122	-52,395	3,755						
1a	380C1F1 / 380C2F1	17049	21892	-180860	0	0	0	17,049	21,892	-180,86	-8681,28	1050,816	17,049	-180,86	21,892	1a	-22569,1	2659,718	57,989	-599,797	69,584
Wind, 10 c	380C1F2 / 380C2F2	17048	20345	-175619	0	0	0	17,048	20,345	-175,619	-6673,52	773,11	17,048	-175,619	20,345	Wind angle:	-45 dgr				
Permanen	380C1F3 / 380C2F3	17047	18296	-169071	0	0	0	17,047	18,296	-169,071	-4733,99	512,288	17,047	-169,071	18,296						
Wind angl	GW / opgw	2227	3618	-26670	0	0	0	2,227	3,618	-26,67	-1504,99	205,8563	2,227	-26,67	3,618						
	Comp. gl	4618	5433	-47577	0	0	0	4,618	5,433	-47,577	-975,329	117,6477	4,618	-47,577	5,433						
1b	380C1F1 / 380C2F1	17036	10277	-171310	0	0	0	17,036	10,277	-171,31	-8222,88	493,296	17,036	-171,31	10,277	1b	-21693,4	1288,157	57,948	-580,787	34,031
Wind, -20	380C1F2 / 380C2F2	17036	10001	-171026	0	0	0	17,036	10,001	-171,026	-6498,99	380,038	17,036	-171,026	10,001	Wind angle:	-45 dgr				
Permanen	380C1F3 / 380C2F3	17036	9634	-170690	0	0	0	17,036	9,634	-170,69	-4779,32	269,752	17,036	-170,69	9,634						
Wind angl	GW / opgw	2225	1466	-22351	0	0	0	2,225	1,466	-22,351	-1261,27	84,41738	2,225	-22,351	1,466						
	Comp. gl	4615	2653	-45410	0	0	0	4,615	2,653	-45,41	-930,905	60,65367	4,615	-45,41	2,653						
3	380C1F1 / 380C2F1	29377	18493	-244493	0	0	0	29,377	18,493	-244,493	-11735,7	887,664	29,377	-244,493	18,493	3	-33820,6	2537,119	116,053	-916,24	66,968
Wind+ice,	380C1F2 / 380C2F2	29377	17711	-243441	0	0	0	29,377	17,711	-243,441	-9250,76	673,018	29,377	-243,441	17,711	Wind angle:	-45 dgr				
Permanen	380C1F3 / 380C2F3	29377	16672	-242189	0	0	0	29,377	16,672	-242,189	-6781,29	466,816	29,377	-242,189	16,672						
Wind angl	GW / opgw	9245	5242	-62273	0	0	0	9,245	5,242	-62,273	-3514,07	302,8323	9,245	-62,273	5,242						
0	Comp. gl	18677	8850	-123844	0	0	0	18,677	8,85	-123,844	-2538,8	206,7884	18,677	-123,844	8,85						
4	380C1F1 / 380C2F1	20053	10347	-172876	0	0	0	20,053	10,347	-172,876	-8298,05	496,656	20,053	-172,876	10,347	4	-22167,4	1311,66	69,259	-594,703	34,644
Construction/maintenance, +5 dg		20053	10073	-172655	0	0	0	20,053	10,073	-172,655	-6560,89	382,774	20,053	-172,655	10,073	Wind angle:	-45 dgr				
Permanen	380C1F3 / 380C2F3	20053	9710	-172394	0	0	0	20,053	9,71	-172,394	-4827,03	271,88	20,053	-172,394	9,71						
Wind angl	GW / opgw	2978	1593	-25256	0	0	0	2,978	1,593	-25,256	-1425,2	92,15627	2,978	-25,256	1,593						
	Comp. gl	6122	2921	-51522	0	0	0	6,122	2,921	-51,522	-1056,2	68,19418	6,122	-51,522	2,921						
1a	380C1F1 / 380C2F1	12781	5160	-116856	0	0	0	12,781	5,16	-116,856	-5609,09	247,68	12,781	-116,856	5,16	1a	-14828,6	660,3511	43,474	-397,393	17,532
Wind, 10 c	380C1F2 / 380C2F2	12781	5155	-116856	0	0	0	12,781	5,155	-116,856	-4440,53	195,89	12,781	-116,856	5,155	Wind angle:	0 dgr				
Permanen	380C1F3 / 380C2F3	12781	5148	-116856	0	0	0	12,781	5,148	-116,856	-3271,97	144,144	12,781	-116,856	5,148						
Wind angl	GW / opgw	1669	675	-15226	0	0	0	1,669	0,675	-15,226	-859,203	39,35869	1,669	-15,226	0,675						
	Comp. gl	3462	1394	-31599	0	0	0	3,462	1,394	-31,599	-647,78	33,2784	3,462	-31,599	1,394						
1b	380C1F1 / 380C2F1	12774	6004	-137241	0	0	0	12,774	6,004	-137,241	-6587,57	288,192	12,774	-137,241	6,004	1b	-17376,7	766,0454	43,451	-465,37	20,355
Wind, -20	380C1F2 / 380C2F2	12774	6003	-137241	0	0	0	12,774	6,003	-137,241	-5215,16	228,114	12,774	-137,241	6,003	Wind angle:	0 dgr				
Permanen	380C1F3 / 380C2F3	12774	6001	-137241	0	0	0	12,774	6,001	-137,241	-3842,75	168,028	12,774	-137,241	6,001						
Wind angl	GW / opgw	1668	769	-17575	0	0	0	1,668	0,769	-17,575	-991,757	44,66235	1,668	-17,575	0,769						
	Comp. gl	3461	1578	-36072	0	0	0	3,461	1,578	-36,072	-739,476	37,04904	3,461	-36,072	1,578						
3	380C1F1 / 380C2F1	25109	9298	-212205	0	0	0	25,109	9,298	-212,205	-10185,8	446,304	25,109	-212,205	9,298	3	-29865,7	1338,662	101,53	-811,618	35,549
Wind+ice,	380C1F2 / 380C2F2	25109	9295	-212206	0	0	0	25,109	9,295	-212,206	-8063,83	353,21	25,109	-212,206	9,295	Wind angle:	0 dgr				
Permanen	380C1F3 / 380C2F3	25109	9291	-212206	0	0	0	25,109	9,291	-212,206	-5941,77	260,148	25,109	-212,206	9,291						
Wind angl	GW / opgw	8685	2546	-58078	0	0	0	8,685	2,546	-58,078	-3277,34	150,2714	8,685	-58,078	2,546						
	Comp. gl	17518	5119	-116923	0	0	0	17,518	5,119	-116,923	-2396,92	128,7289	17,518	-116,923	5,119						
4	380C1F1 / 380C2F1	15788	6213	-142035	0	0	0	15,788	6,213	-142,035	-6817,68	298,224	15,788	-142,035	6,213	4	-18275,4	807,8865	54,751	-490,645	21,458
Construction/maintenance, +5 dg		15788	6212	-142035	0	0	0	15,788	6,212	-142,035	-5397,33	236,056	15,788	-142,035	6,212	Wind angle:	0 dgr				
Permanen	380C1F3 / 380C2F3	15788	6210	-142035	0	0	0	15,788	6,21	-142,035	-3976,98	173,88	15,788	-142,035	6,21						
Wind angl	GW / opgw	2421	926	-21162	0	0	0	2,421	0,926	-21,162	-1194,17	54,09414	2,421	-21,162	0,926						
	Comp. gl	4966	1897	-43378	0	0	0	4,966	1,897	-43,378	-889,249	45,63233	4,966	-43,378	1,897						
6	380C1F1 / 380C2F1	12781	5102	-116857	0	0	0	12,781	5,102	-116,857	-5609,14	244,896	12,781	-116,857	5,102	6	-14828,7	653,4138	43,474	-397,397	17,351
Permanen	380C1F2 / 380C2F2	12781	5102	-116857	0	0	0	12,781	5,102	-116,857	-4440,57	193,876	12,781	-116,857	5,102	0					

Permanen	380C1F3 / 380C2F3	12781	5102	-116857	0	0	0	12,781	5,102	-116,857	-3272	142,856	12,781	-116,857	5,102												
	GW / opgw	1669	665	-15226	0	0	0	1,669	0,665	-15,226	-859,203	38,79439	1,669	-15,226	0,665												
	Comp. gl	3462	1380	-31600	0	0	0	3,462	1,38	-31,6	-647,8	32,9914	3,462	-31,6	1,38												
1a	380C1F1 / 380C2F1	12786	24257	-173840	0	0	0	12,786	24,257	-173,84	-8344,32	1164,336	12,786	-173,84	24,257	1a	-21433,1	2926,277	43,488	-566,654	76,422						
Wind, 10	380C1F2 / 380C2F2	12785	22336	-165790	0	0	0	12,785	22,336	-165,79	-6300,02	848,768	12,785	-165,79	22,336	Wind angle:	45 dgr										
Permanen	380C1F3 / 380C2F3	12784	19781	-155368	0	0	0	12,784	19,781	-155,368	-4350,3	553,868	12,784	-155,368	19,781												
Wind angl	GW / opgw	1670	4101	-26984	0	0	0	1,67	4,101	-26,984	-1522,71	232,6886	1,67	-26,984	4,101												
	Comp. gl	3463	5947	-44672	0	0	0	3,463	5,947	-44,672	-915,776	126,6163	3,463	-44,672	5,947												
1b	380C1F1 / 380C2F1	12774	9464	-140493	0	0	0	12,774	9,464	-140,493	-6743,66	454,272	12,774	-140,493	9,464	1b	-17748,1	1177,384	43,451	-474,749	31,054						
Wind, -20	380C1F2 / 380C2F2	12774	9125	-139908	0	0	0	12,774	9,125	-139,908	-5316,5	346,75	12,774	-139,908	9,125	Wind angle:	45 dgr										
Permanen	380C1F3 / 380C2F3	12774	8675	-139212	0	0	0	12,774	8,675	-139,212	-3897,94	242,9	12,774	-139,212	8,675												
Wind angl	GW / opgw	1668	1386	-18361	0	0	0	1,668	1,386	-18,361	-1036,11	79,47966	1,668	-18,361	1,386												
	Comp. gl	3461	2404	-36775	0	0	0	3,461	2,404	-36,775	-753,888	53,98204	3,461	-36,775	2,404												
3	380C1F1 / 380C2F1	25110	19016	-222312	0	0	0	25,11	19,016	-222,312	-10671	912,768	25,11	-222,312	19,016	3	-31013,9	2608,714	101,535	-840,653	68,812						
Wind+ice,	380C1F2 / 380C2F2	25110	18062	-220528	0	0	0	25,11	18,062	-220,528	-8380,06	686,356	25,11	-220,528	18,062	Wind angle:	45 dgr										
Permanen	380C1F3 / 380C2F3	25110	16796	-218388	0	0	0	25,11	16,796	-218,388	-6114,86	470,288	25,11	-218,388	16,796												
Wind angl	GW / opgw	8686	5641	-60388	0	0	0	8,686	5,641	-60,388	-3407,69	324,923	8,686	-60,388	5,641												
	Comp. gl	17519	9297	-119037	0	0	0	17,519	9,297	-119,037	-2440,26	214,3793	17,519	-119,037	9,297												
4	380C1F1 / 380C2F1	15788	9636	-144385	0	0	0	15,788	9,636	-144,385	-6930,48	462,528	15,788	-144,385	9,636	4	-18535,6	1214,657	54,751	-497,211	32,042						
Construction/maintenance, +5 dgr		15788	9304	-143956	0	0	0	15,788	9,304	-143,956	-5470,33	353,552	15,788	-143,956	9,304	Wind angle:	45 dgr										
Permanen	380C1F3 / 380C2F3	15788	8862	-143448	0	0	0	15,788	8,862	-143,448	-4016,54	248,136	15,788	-143,448	8,862												
Wind angl	GW / opgw	2421	1529	-21628	0	0	0	2,421	1,529	-21,628	-1220,47	88,12143	2,421	-21,628	1,529												
	Comp. gl	4966	2711	-43794	0	0	0	4,966	2,711	-43,794	-897,777	62,31933	4,966	-43,794	2,711												
1a	380C1F1 / 380C2F1	12793	41442	-247868	0	0	0	12,793	41,442	-247,868	-11897,7	1989,216	12,793	-247,868	41,442	1a	-30235,8	4971,719	43,51	-795,636	129,677						
Wind, 10	380C1F2 / 380C2F2	12791	37890	-232608	0	0	0	12,791	37,89	-232,608	-8839,1	1439,82	12,791	-232,608	37,89	Wind angle:	90 dgr										
Permanen	380C1F3 / 380C2F3	12790	33132	-212028	0	0	0	12,79	33,132	-212,028	-5936,78	927,696	12,79	-212,028	33,132												
Wind angl	GW / opgw	1671	7129	-40302	0	0	0	1,671	7,129	-40,302	-2274,24	403,5594	1,671	-40,302	7,129												
	Comp. gl	3465	10084	-62830	0	0	0	3,465	10,084	-62,83	-1288,02	211,4275	3,465	-62,83	10,084												
1b	380C1F1 / 380C2F1	12775	12573	-147893	0	0	0	12,775	12,573	-147,893	-7098,86	603,504	12,775	-147,893	12,573	1b	-18596,2	1546,076	43,454	-496,268	40,631						
Wind, -20	380C1F2 / 380C2F2	12775	11917	-146064	0	0	0	12,775	11,917	-146,064	-5550,43	452,846	12,775	-146,064	11,917	Wind angle:	90 dgr										
Permanen	380C1F3 / 380C2F3	12774	11050	-143849	0	0	0	12,774	11,05	-143,849	-4027,77	306,4	12,774	-143,849	11,05												
Wind angl	GW / opgw	1669	1948	-20057	0	0	0	1,669	1,948	-20,057	-1131,82	111,1941	1,669	-20,057	1,948												
	Comp. gl	3461	3143	-38405	0	0	0	3,461	3,143	-38,405	-787,303	69,13154	3,461	-38,405	3,143												
3	380C1F1 / 380C2F1	25114	27748	-243938	0	0	0	25,114	27,748	-243,938	-11709	1331,904	25,114	-243,938	27,748	3	-33521,8	3742,2	101,548	-904,47	98,454						
Wind+ice,	380C1F2 / 380C2F2	25113	25911	-238738	0	0	0	25,113	25,911	-238,738	-9072,04	984,618	25,113	-238,738	25,911	Wind angle:	90 dgr										
Permanen	380C1F3 / 380C2F3	25112	23476	-232319	0	0	0	25,112	23,476	-232,319	-6504,93	657,328	25,112	-232,319	23,476												
Wind angl	GW / opgw	8688	8375	-65448	0	0	0	8,688	8,375	-65,448	-3693,23	479,2041	8,688	-65,448	8,375												
	Comp. gl	17521	12944	-124027	0	0	0	17,521	12,944	-124,027	-2542,55	289,1455	17,521	-124,027	12,944												
4	380C1F1 / 380C2F1	15789	12665	-149921	0	0	0	15,789	12,665	-149,921	-7196,21	607,92	15,789	-149,921	12,665	4	-19152,9	1573,411	54,753	-512,841	41,366						
Construction/maintenance, +5 dgr		15789	12028	-148536	0	0	0	15,789	12,028	-148,536	-5644,37	457,064	15,789	-148,536	12,028	Wind angle:	90 dgr										
Permanen	380C1F3 / 380C2F3	15788	11185	-146872	0	0	0	15,788	11,185	-146,872	-4112,42	313,18	15,788	-146,872	11,185												
Wind angl	GW / opgw	2421	2064	-22708	0	0	0	2,421	2,064	-22,708	-1281,41	118,3115	2,421	-22,708	2,064												
	Comp. gl	4966	3424	-44804	0	0	0	4,966	3,424	-44,804	-918,482	76,93583	4,966	-44,804	3,424												
1a	380C1F1 / 380C2F1	12785	20990	-160254	0	0	0	12,785	20,99	-160,254	-7692,19	1007,52	12,785	-160,254	20,99	1a	-19840,5	2538,342	43,485	-525,519	66,334						
Wind, 10	380C1F2 / 380C2F2	12784	19391	-153818	0	0	0	12,784	19,391	-153,818	-5845,08	736,858	12,784	-153,818	19,391	Wind angle:	-45 dgr										
Permanen	380C1F3 / 380C2F3	12783	17269	-145602	0	0	0	12,783	17,269	-145,602	-4076,86	483,532	12,783	-145,602	17,269												
Wind angl	GW / opgw	1670	3519	-24397	0	0	0	1,67	3,519	-24,397	-1376,72	199,8464	1,67	-24,397	3,519												
	Comp. gl	3463	5165	-41448	0	0	0	3,463	5,165	-41,448	-849,684	110,5853	3,463	-41,448	5,165												
1b	380C1F1 / 380C2F1	12774	8888	-139529	0	0	0	12,774	8,888	-139,529	-6697,39	426,624	12,774	-139,529	8,888	1b	-17637,9	1108,998	43,451	-471,962	29,277						
Wind, -20	380C1F2 / 380C2F2	12774	8607	-139114	0	0	0	12,774	8,607	-139,114	-5286,33	327,066	12,774	-139,114	8,607	Wind angle:	-45 dgr										
Permanen	380C1F3 / 380C2F3	12774	8233	-138621	0	0	0	12,774	8,233	-138,621	-3881,39	230,524	12,774	-138,621	8,233												
Wind angl	GW / opgw	1668	1282	-18132	0	0	0	1,668	1,282	-18,132	-1023,19	73,61094	1,668	-18,132	1,282												
	Comp. gl	3461	2267	-36566	0	0	0	3,461	2,267	-36,566	-749,603	51,17354	3,461	-36,566	2,267												
3	380C1F1 / 380C2F1	25110	17395	-219367	0	0	0	25,11	17,395	-219,367	-10529,6	834,96	25,11	-219,367	17,395	3	-30677	2397,696	101,533	-832,116	63,291						
Wind+ice,	380C1F2 / 380C2F2	25110	16603	-218086	0	0	0	25,11	16,603	-218,086	-8287,27	630,914	25,11	-218,086	16,603	Wind angle:	-45 dgr										
Permanen	380C1F3 / 380C2F3	25109	15552	-216557	0	0	0	25,109	15,552	-216,557	-6063,6	435,456	25,109	-216,557	15,552												
Wind angl	GW / opgw	8686	5129	-59708	0	0	0	8,686	5,129	-59,708	-3369,32	296,0308	8,686	-59,708	5,129												
0	Comp. gl	17518	8612	-118398	0	0	0	17,518	8,612	-118,398	-2427,16	200,3354	17,518	-118,398	8,612												
4	380C1F1 / 380C2F1	15788	9071	-143680	0	0	0	15,788	9,071	-143,68	-6896,64	435,408	15,788	-143,68	9,071	4	-18457,3	1147,645	54,751	-495,232	30,3						
Construction/maintenance, +5 dgr		15788	8795	-143377	0	0	0	15,788	8,795	-143,377	-5448,33	334,21	15,788	-143,377	8,795	Wind angle:	-45 dgr										
Permanen	380C1F3 / 380C2F3	15788	8427	-143019	0	0	0	15,788	8,427	-143,019	-4004,53	235,956	15,788	-143,019	8,427												
Wind angl	GW / opgw	2421	1429	-21489	0	0	0	2,421	1,429	-21,489	-1212,62	82,47843	2,421	-21,489	1,429												
	Comp. gl	4966	2578	-43667	0	0	0	4,966	2,578	-43,667	-895,174	59,59283	4,966	-43,667	2,578												

W2E400 07-L2

Hoogte mast		57 m		
Hoogte onderste stroomdraad (F3)		28 m		
		Hoogte		Excentriciteit ophanging t.o.v. hart mast
Bliksemdraad = GW / CH_{mast} -	0,57 m =	56,43 m		0,76 m
1e traverse - 380C1F1 F2 +	10 m =	48 m		0 m
2e traverse - 380C1F2 F3 +	10 m =	38 m		0 m
3e traverse - 380C1F3		28 m		0 m
Passieve lijn = Comp C. F3 -	7,5 m =	20,5 m		1,358 m

	Uit mast			Uit lijnen				
	ULS (incl bel factoren)			SLS				
	N	V	M	Nmin	Nmax	Vmax	Mlangs;ma	Mdwars;max
	[kN]	[kN]	[kNm]	[kN]	[kN]	[kN]	[kNm]	[kNm]
	761	104	2789	48	87	778	28845	3503

			Belastingen uit lijnen					Belasting uit mast		
			M_{langs}	M_{dwars}	N	V_{langs}	V_{dwars}	N	V	M
SLS	0 deg	1a	**-16174**	**717**	48	**-433**	**19**	634	69	1859
		1b	-18799	828	**48**	-504	22	634	69	1859
		3	-26812	1196	87	-727	32	634	69	1859
		4	-18575	820	56	-498	22	634	69	1859
	45 deg	1a	-19240	2169	48	-511	57	634	69	1859
		1b	-18940	1098	**48**	-507	29	634	69	1859
		3	-27430	2036	87	-742	54	634	69	1859
		4	-18684	1089	56	-501	29	634	69	1859
	90 deg	1a	-24427	**3503**	48	-645	**91**	634	69	1859
		1b	-19283	1334	48	-516	35	634	69	1859
		3	**-28845**	2781	**87**	**-778**	73	634	69	1859
		4	-18957	1322	56	-508	35	634	69	1859
	-45 deg	1a	-18416	1921	48	-490	50	634	69	1859
		1b	-18898	1054	**48**	-506	28	634	69	1859
		3	-27246	1898	87	-737	50	634	69	1859
		4	-18651	1045	56	-500	28	634	69	1859

regel			Loadcase	Totaal M_{langs}	M_{dwars}	N	V_{langs}	V_{dwars}	Totaal moment
1	Perm load 1,2	0 deg	1a	18033	2577	682	503	88	18216,6
2	Perm load 1,2	0 deg	1b	20659	2688	682	573	91	20832,91
3	Perm load 1,2	0 deg	3	28672	3056	721	796	101	28833,98
4	Perm load 1,2	0 deg	4	20434	2680	690	568	91	20608,86
5									
6	Perm load 1,2	45 deg	1a	21099	4029	682	581	126	21480,16
7	Perm load 1,2	45 deg	1b	20800	2957	682	576	98	21009,01
8	Perm load 1,2	45 deg	3	29289	3896	721	811	123	29546,93
9	Perm load 1,2	45 deg	4	20544	2948	690	570	98	20754,16
10									
11	Perm load 1,2	90 deg	1a	26286	5362	682	715	161	26827,5
12	Perm load 1,2	90 deg	1b	21143	3193	682	585	104	21382,37
13	Perm load 1,2	90 deg	3	30704	4640	721	847	143	31052,68
14	Perm load 1,2	90 deg	4 Construct	20816	3181	690	577	104	21058,04
15									
16	Perm load 1,2	-45 deg	1a	19731	3781	682	560	120	20090,02
17	Perm load 1,2	-45 deg	1b	20212	2913	682	575	97	20421,16
18	Perm load 1,2	-45 deg	3	28560	3757	721	807	120	28806,51
19	Perm load 1,2	-45 deg	4	19965	2904	690	570	97	20175,43
				30704	5362	721	847	161	31053
						682			

	M langs max	M dwars max	N max	V langs max	V dwars max	M tot max	N min
1							
2							x
3							
4							
5							
6							
7							x
8							
9							
10							
11	x			x			
12							
13	x		x	x		x	
14							
15							
16							
17							x
18							
19							

samenvatting

	Mast	Bijlage	Wind	Loadcase	M_{langs}	M_{dwars}	N	V_{langs}	V_{dwars}
2	W2E400	07-L2	Perm load :0 deg	1b	20659	2688	682	573	91
7	W2E400	07-L2	Perm load :45 deg	1b	20800	2957	682	576	98
11	W2E400	07-L2	Perm load :90 deg	1a	26286	5362	682	715	161
13	W2E400	07-L2	Perm load :90 deg	3	30704	4640	721	847	143
17	W2E400	07-L2	Perm load :-45 deg	1b	20212	2913	682	575	97
7	W2E400	07-L2	Perm load :45 deg	1b	20800	2957	682	576	98

W2E400 TOWER (rev 6.0, date Appendix: L2
Loadcase according to 50341-3-15

	Attachmer [N]	**BACK** [N]	[N]	[N]	**AHEAD** [N]	[N]
1a	380C1F1 / 14202	5603	-127432	0	0	0
Wind, 10 c	380C1F2 / 14202	5599	-127432	0	0	0
Permanen	380C1F3 / 14202	5594	-127433	0	0	0
Wind angl	GW / opgv1855	733	-16643	0	0	0
	Comp. gl 3847	1517	-34520	0	0	0
1b	380C1F1 / 14194	6488	-148420	0	0	0
Wind, -20	380C1F2 / 14194	6487	-148420	0	0	0
Permanen	380C1F3 / 14194	6486	-148420	0	0	0
Wind angl	GW / opgv1854	835	-19082	0	0	0
	Comp. gl 3845	1712	-39161	0	0	0
3	380C1F1 / 22419	8527	-194794	0	0	0
Wind+ice,	380C1F2 / 22419	8525	-194794	0	0	0
Permanen	380C1F3 / 22419	8522	-194794	0	0	0
Wind angl	GW / opgv6530	2063	-47087	0	0	0
	Comp. gl 13213	4160	-95055	0	0	0
4	380C1F1 / 16206	6340	-145038	0	0	0
Constructi	380C1F2 / 16206	6340	-145038	0	0	0
Permanen	380C1F3 / 16206	6339	-145038	0	0	0
Wind angl	GW / opgv2356	905	-20697	0	0	0
	Comp. gl 4850	1860	-42552	0	0	0
1a	380C1F1 / 14205	17838	-154110	0	0	0
Wind, 10 c	380C1F2 / 14204	16606	-149838	0	0	0
Permanen	380C1F3 / 14204	14974	-144523	0	0	0
Wind angl	GW / opgv1855	2932	-22543	0	0	0
	Comp. gl 3848	4431	-40476	0	0	0
1b	380C1F1 / 14194	8755	-149656	0	0	0
Wind, -20	380C1F2 / 14194	8535	-149428	0	0	0
Permanen	380C1F3 / 14194	8244	-149158	0	0	0
Wind angl	GW / opgv1854	1236	-19388	0	0	0
	Comp. gl 3845	2254	-39427	0	0	0
3	380C1F1 / 22419	14940	-200043	0	0	0
Wind+ice,	380C1F2 / 22419	14314	-199098	0	0	0
Permanen	380C1F3 / 22419	13483	-197972	0	0	0
Wind angl	GW / opgv6531	4123	-48592	0	0	0
	Comp. gl 13214	6942	-96419	0	0	0
4	380C1F1 / 16206	8597	-146023	0	0	0
Constructi	380C1F2 / 16206	8380	-145839	0	0	0
Permanen	380C1F3 / 16206	8091	-145622	0	0	0
Wind angl	GW / opgv2356	1302	-20909	0	0	0
	Comp. gl 4850	2399	-42736	0	0	0
1a	380C1F1 / 14209	29071	-198460	0	0	0
Wind, 10 c	380C1F2 / 14208	26723	-188723	0	0	0
Permanen	380C1F3 / 14207	23597	-176017	0	0	0
Wind angl	GW / opgv1856	4937	-31126	0	0	0
	Comp. gl 3849	7117	-50945	0	0	0
1b	380C1F1 / 14195	10742	-152653	0	0	0
Wind, -20	380C1F2 / 14195	10325	-151895	0	0	0
Permanen	380C1F3 / 14195	9772	-150992	0	0	0
Wind angl	GW / opgv1854	1593	-20104	0	0	0
	Comp. gl 3846	2728	-40080	0	0	0
3	380C1F1 / 22421	20650	-211949	0	0	0
Wind+ice,	380C1F2 / 22421	19448	-209016	0	0	0
Permanen	380C1F3 / 22420	17857	-205455	0	0	0
Wind angl	GW / opgv6532	5945	-51964	0	0	0
	Comp. gl 13215	9369	-99683	0	0	0
4	380C1F1 / 16207	10561	-148456	0	0	0
Constructi	380C1F2 / 16207	10150	-147838	0	0	0
Permanen	380C1F3 / 16207	9604	-147103	0	0	0
Wind angl	GW / opgv2356	1651	-21421	0	0	0
	Comp. gl 4850	2864	-43202	0	0	0
1a	380C1F1 / 14204	15746	-146983	0	0	0
Wind, 10 c	380C1F2 / 14204	14726	-143754	0	0	0
Permanen	380C1F3 / 14203	13378	-139782	0	0	0
Wind angl	GW / opgv1855	2555	-21055	0	0	0
	Comp. gl 3848	3933	-38851	0	0	0
1b	380C1F1 / 14194	8382	-149281	0	0	0
Wind, -20	380C1F2 / 14194	8200	-149120	0	0	0
Permanen	380C1F3 / 14194	7956	-148931	0	0	0
Wind angl	GW / opgv1854	1169	-19296	0	0	0
	Comp. gl 3845	2165	-39346	0	0	0
3	380C1F1 / 22419	13877	-198486	0	0	0
Wind+ice,	380C1F2 / 22419	13357	-197814	0	0	0
Permanen	380C1F3 / 22419	12666	-197017	0	0	0
Wind angl	GW / opgv6530	3783	-48146	0	0	0
	Comp. gl 13213	6486	-96005	0	0	0
4	380C1F1 / 16206	8228	-145721	0	0	0
Constructi	380C1F2 / 16206	8046	-145592	0	0	0
Permanen	380C1F3 / 16206	7805	-145440	0	0	0
Wind angl	GW / opgv2356	1237	-20844	0	0	0
	Comp. gl 4850	2311	-42679	0	0	0

	Totaal Vert [kN]	Dwars [kN]	Langs [kN]
	14,202	5,603	-127,432
	14,202	5,599	-127,432
	14,202	5,594	-127,433
	1,855	0,733	-16,643
	3,847	1,517	-34,52
	14,194	6,488	-148,42
	14,194	6,487	-148,42
	14,194	6,486	-148,42
	1,854	0,835	-19,082
	3,845	1,712	-39,161
	22,419	8,527	-194,794
	22,419	8,525	-194,794
	22,419	8,522	-194,794
	6,53	2,063	-47,087
	13,213	4,16	-95,055
	16,206	6,34	-145,038
	16,206	6,34	-145,038
	16,206	6,339	-145,038
	2,356	0,905	-20,697
	4,85	1,86	-42,552
	14,205	17,838	-154,11
	14,204	16,606	-149,838
	14,204	14,974	-144,523
	1,855	2,932	-22,543
	3,848	4,431	-40,476
	14,194	8,755	-149,656
	14,194	8,535	-149,428
	14,194	8,244	-149,158
	1,854	1,236	-19,388
	3,845	2,254	-39,427
	22,419	14,94	-200,043
	22,419	14,314	-199,098
	22,419	13,483	-197,972
	6,531	4,123	-48,592
	13,214	6,942	-96,419
	16,206	8,597	-146,023
	16,206	8,38	-145,839
	16,206	8,091	-145,622
	2,356	1,302	-20,909
	4,85	2,399	-42,736
	14,209	29,071	-198,46
	14,208	26,723	-188,723
	14,207	23,597	-176,017
	1,856	4,937	-31,126
	3,849	7,117	-50,945
	14,195	10,742	-152,653
	14,195	10,325	-151,895
	14,195	9,772	-150,992
	1,854	1,593	-20,104
	3,846	2,728	-40,08
	22,421	20,65	-211,949
	22,421	19,448	-209,016
	22,42	17,857	-205,455
	6,532	5,945	-51,964
	13,215	9,369	-99,683
	16,207	10,561	-148,456
	16,207	10,15	-147,838
	16,207	9,604	-147,103
	2,356	1,651	-21,421
	4,85	2,864	-43,202
	14,204	15,746	-146,983
	14,204	14,726	-143,754
	14,203	13,378	-139,782
	1,855	2,555	-21,055
	3,848	3,933	-38,851
	14,194	8,382	-149,281
	14,194	8,2	-149,12
	14,194	7,956	-148,931
	1,854	1,169	-19,296
	3,845	2,165	-39,346
	22,419	13,877	-198,486
	22,419	13,357	-197,814
	22,419	12,666	-197,017
	6,53	3,783	-48,146
	13,213	6,486	-96,005
	16,206	8,228	-145,721
	16,206	8,046	-145,592
	16,206	7,805	-145,44
	2,356	1,237	-20,844
	4,85	2,311	-42,679

Belastingen op mastvoet, per lijn

	M_{langs}	M_{dwars}	N	V_{langs}	V_{dwars}
	-6116,74	268,944	14,202	-127,432	5,603
	-4842,42	212,762	14,202	-127,432	5,599
	-3568,12	156,632	14,202	-127,433	5,594
	-939,164	42,77299	1,855	-16,643	0,733
	-707,66	36,32273	3,847	-34,52	1,517
	-7124,16	311,424	14,194	-148,42	6,488
	-5639,96	246,506	14,194	-148,42	6,487
	-4155,76	181,608	14,194	-148,42	6,486
	-1076,8	48,52809	1,854	-19,082	0,835
	-802,801	40,31751	3,845	-39,161	1,712
	-9350,11	409,296	22,419	-194,794	8,527
	-7402,17	323,95	22,419	-194,794	8,525
	-5454,23	238,616	22,419	-194,794	8,522
	-2657,12	121,3779	6,53	-47,087	2,063
	-1948,63	103,2233	13,213	-95,055	4,16
	-6961,82	304,32	16,206	-145,038	6,34
	-5511,44	240,92	16,206	-145,038	6,34
	-4061,06	177,492	16,206	-145,038	6,339
	-1167,93	52,85971	2,356	-20,697	0,905
	-872,316	44,7163	4,85	-42,552	1,86
	-7397,28	856,224	14,205	-154,11	17,838
	-5693,84	631,028	14,204	-149,838	16,606
	-4046,64	419,272	14,204	-144,523	14,974
	-1272,1	166,8626	1,855	-22,543	2,932
	-829,758	96,06108	3,848	-40,476	4,431
	-7183,49	420,24	14,194	-149,656	8,755
	-5678,26	324,33	14,194	-149,428	8,535
	-4176,42	230,832	14,194	-149,158	8,244
	-1094,06	71,15652	1,854	-19,388	1,236
	-808,254	51,42851	3,845	-39,427	2,254
	-9602,06	717,12	22,419	-200,043	14,94
	-7565,72	543,932	22,419	-199,098	14,314
	-5543,22	377,524	22,419	-197,972	13,483
	-2742,05	237,6245	6,531	-48,592	4,123
	-1976,59	160,2556	13,214	-96,419	6,942
	-7009,1	412,656	16,206	-146,023	8,597
	-5541,88	318,44	16,206	-145,839	8,38
	-4077,42	226,548	16,206	-145,622	8,091
	-1179,89	75,26242	2,356	-20,909	1,302
	-876,088	55,7658	4,85	-42,736	2,399
	-9526,08	1395,408	14,209	-198,46	29,071
	-7171,47	1015,474	14,208	-188,723	26,723
	-4928,48	660,716	14,207	-176,017	23,597
	-1756,44	280,0055	1,856	-31,126	4,937
	-1044,37	151,1254	3,849	-50,945	7,117
	-7327,34	515,616	14,195	-152,653	10,742
	-5772,01	392,35	14,195	-151,895	10,325
	-4227,78	273,616	14,195	-150,992	9,772
	-1134,47	91,30203	1,854	-20,104	1,593
	-821,64	61,14687	3,846	-40,08	2,728
	-10173,6	991,2	22,421	-211,949	20,65
	-7942,61	739,024	22,421	-209,016	19,448
	-5752,74	499,996	22,42	-205,455	17,857
	-2932,33	340,4407	6,532	-51,964	5,945
	-2043,5	210,0105	13,215	-99,683	9,369
	-7125,89	506,928	16,207	-148,456	10,561
	-5617,84	385,7	16,207	-147,838	10,15
	-4118,88	268,912	16,207	-147,103	9,604
	-1208,79	94,95649	2,356	-21,421	1,651
	-885,641	65,2983	4,85	-43,202	2,864
	-7055,18	755,808	14,204	-146,983	15,746
	-5462,65	559,588	14,204	-143,754	14,726
	-3913,9	374,584	14,203	-139,782	13,378
	-1188,13	145,5885	1,855	-21,055	2,555
	-796,446	85,85208	3,848	-38,851	3,933
	-7165,49	402,336	14,194	-149,281	8,382
	-5666,56	311,6	14,194	-149,12	8,2
	-4170,07	222,768	14,194	-148,931	7,956
	-1088,87	67,37571	1,854	-19,296	1,169
	-806,593	49,60401	3,845	-39,346	2,165
	-9527,33	666,096	22,419	-198,486	13,877
	-7516,93	507,566	22,419	-197,814	13,357
	-5516,48	354,648	22,419	-197,017	12,666
	-2716,88	218,4375	6,53	-48,146	3,783
	-1968,1	150,9063	13,213	-96,005	6,486
	-6994,61	394,944	16,206	-145,721	8,228
	-5532,5	305,748	16,206	-145,592	8,046
	-4072,32	218,54	16,206	-145,44	7,805
	-1176,23	71,59447	2,356	-20,844	1,237
	-874,92	53,9618	4,85	-42,679	2,311

Belasting op mastvoet, belastinggeval

		M_{langs}	M_{dwars}	N	V_{langs}	V_{dwars}
1a		-16174,1	717,4337	48,308	-433,46	19,046
Wind angle:	0 dgr					
1b		-18799,5	828,3836	48,281	-503,503	22,008
Wind angle:	0 dgr					
3		-26812,3	1196,463	87	-726,524	31,797
Wind angle:	0 dgr					
4		-18574,6	820,308	55,824	-498,363	21,784
Wind angle:	0 dgr					
1a		-19239,6	2169,448	48,316	-511,49	56,781
Wind angle:	45 dgr					
1b		-18940,5	1097,987	48,281	-507,057	29,024
Wind angle:	45 dgr					
3		-27429,6	2036,456	87,002	-742,124	53,802
Wind angle:	45 dgr					
4		-18684,4	1088,672	55,824	-501,129	28,769
Wind angle:	45 dgr					
1a		-24426,8	3502,729	48,329	-645,271	91,445
Wind angle:	90 dgr					
1b		-19283,2	1334,031	48,285	-515,724	35,16
Wind angle:	90 dgr					
3		-28844,7	2780,671	87,009	-778,067	73,269
Wind angle:	90 dgr					
4		-18957	1321,795	55,827	-508,02	34,83
Wind angle:	90 dgr					
1a		-18416,3	1921,421	48,314	-490,425	50,338
Wind angle:	-45 dgr					
1b		-18897,6	1053,684	48,281	-505,974	27,872
Wind angle:	-45 dgr					
3		-27245,7	1897,654	87	-737,468	50,169
Wind angle:	-45 dgr					
4		-18650,6	1044,788	55,824	-500,276	27,627
Wind angle:	-45 dgr					

W2H400+5 | 08-N

Hoogte mast			52	m		
Hoogte onderste stroomdraad (F3)			26	m		
			Hoogte		Excentriciteit ophanging t.o.v. hart mast	
Bliksemdraad = GW / C H_{mast} -	0,576	m =	51,424	m	0,76	m
1e traverse - 380C1F1 F2 +	10	m =	52	m	0	m
2e traverse - 380C1F2 F3 +	10	m =	42	m	0	m
3e traverse - 380C1F3			32	m	0	m
Passieve lijn = Comp C. F3 -	7,5	m =	24,5	m	2,075	m

	Uit mast (excl belastingsfactoren)			Uit lijnen (incl belastingsfactoren)				
	N	V	M	Nmin	Nmax	Vmax	Mlangs;ma	Mdwars;max
	[kN]	[kN]	[kNm]	[kN]	[kN]	[kN]	[kNm]	[kNm]
Sheet 08 - N	793	122	3544	87	232	909	12424	36870
Sheet 08 - N1				43	71	627	25589	13974
Max	793	122	3544	43	232,126	908,716	25589,39	36870,14

		Belastingen uit lijnen						Belasting uit mast		
			M_{langs}	M_{dwars}	N	V_{langs}	V_{dwars}	N	V	M
Perm load 1,2	0 deg	1a	0	19528	116	0	475	793	122	3544
		1b	0	20315	116	0	495	793	23	665
		3	0	31674	232	0	784	793	34	997
		4	0	20782	139	0	507	793	23	665
		6	0	19187	130	0	468			
	45 deg	1a	-10203	27002	116	-242	653	793	122	3544
		1b	-482	21144	116	-11	515	793	23	665
		3	-1912	34405	232	-45	849	793	34	997
		4	-312	21536	139	-7	525	793	23	665
	90 deg	1a	0	33784	116	0	815	793	122	3544
		1b	0	21897	116	0	533	793	23	665
		3	0	**36870**	**232**	0	**909**	793	34	997
		4	0	22230	139	0	542	793	23	665
	-45 deg	1a	10203	27002	116	242	653	793	122	3544
		1b	482	21144	116	11	515	793	23	665
		3	1912	34405	232	45	849	793	34	997
		4	312	21536	139	7	525	793	23	665
Perm load 0,9	0 deg	1a	0	16152	87	0	392	595	122	3544
		1b	0	16478	**87**	0	401	595	23	665
		3	0	28637	203	0	710	595	34	997
		4	0	17291	110	0	422	595	23	665
		6	0	**13791**	87	0	**336**			
	45 deg	1a	**-12424**	24507	87	**-296**	592	595	122	3544
		1b	-803	17448	87	-19	424	595	23	665
		3	-2405	31584	203	-56	781	595	34	997
		4	-508	18132	110	-12	442	595	23	665
	90 deg	1a	0	32219	87	0	776	595	122	3544
		1b	0	18313	87	0	445	595	23	665
		3	0	34226	203	0	844	595	34	997
		4	0	18894	110	0	461	595	23	665
	-45 deg	1a	**12424**	24507	87	**296**	592	595	122	3544
		1b	803	17448	87	19	424	595	23	665
		3	2405	31584	203	56	781	595	34	997
		4	508	18132	110	12	442	595	23	665

regel				Totaal													
			Loadcase	M_{langs}	M_{dwars}	N	V_{langs}	V_{dwars}	Totaal moment		M_{langs}	M_{dwars}	N	V_{langs}	V_{dwars}	Totaal mom	Nmin
1	Perm load 1,2	0 deg	1a	3544	19528	909	122	475	19846,77	1							
2	Perm load 1,2	0 deg	1b	665	20315	909	23	495	20326,14	2							
3	Perm load 1,2	0 deg	3	997	31674	1025	34	784	31689,77	3							
4	Perm load 1,2	0 deg	4	665	20782	932	23	507	20792,68	4							
5	Perm load 1,2	0 deg	6							5							
6										6							
7	Perm load 1,2	45 deg	1a	12709	29508	909	329	739	32128,64	7							
8	Perm load 1,2	45 deg	1b	952	21614	909	27	531	21635,14	8							
9	Perm load 1,2	45 deg	3	2617	35110	1025	69	874	35206,95	9							
10	Perm load 1,2	45 deg	4	782	22006	932	23	542	22019,92	10							
11										11							
12	Perm load 1,2	90 deg	1a	0	37328	909	0	937	37327,9	12							
13	Perm load 1,2	90 deg	1b	0	22561	909	0	555	22561,28	13							
14	Perm load 1,2	90 deg	3	0	37867	1025	0	943	37866,89	14		x	x		x	x	
15	Perm load 1,2	90 deg	4 Construct	0	22894	932	0	565	22894,43	15							
16										16							
17	Perm load 1,2	-45 deg	1a	12709	29508	909	329	739	32128,64	17							
18	Perm load 1,2	-45 deg	1b	952	21614	909	27	531	21635,14	18							
19	Perm load 1,2	-45 deg	3	2617	35110	1025	69	874	35206,95	19							
20	Perm load 1,2	-45 deg	4	782	22006	932	23	542	22019,92	20							
21										21							
22	Perm load 0,9	0 deg	1a	3544	16152	682	122	392	16535,98	22							
23	Perm load 0,9	0 deg	1b	665	16478	682	23	401	16491,13	23							x
24	Perm load 0,9	0 deg	3	997	28637	798	34	710	28654,44	24							
25	Perm load 0,9	0 deg	4	665	17291	704	23	422	17303,85	25							
26	Perm load 0,9	0 deg	6							26							
27										27							
28	Perm load 0,9	45 deg	1a	14930	27013	682	382	678	30863,99	28	x			x			
29	Perm load 0,9	45 deg	1b	1273	17918	682	35	441	17963,43	29							
30	Perm load 0,9	45 deg	3	3110	32288	798	80	805	32437,77	30							
31	Perm load 0,9	45 deg	4 Construct	978	18602	704	28	459	18627,52	31							
32										32							
33	Perm load 0,9	90 deg	1a	0	35763	682	0	898	35762,86	33							
34	Perm load 0,9	90 deg	1b	0	18977	682	0	468	18977,41	34							
35	Perm load 0,9	90 deg	3	0	35223	798	0	879	35222,88	35							
36	Perm load 0,9	90 deg	4	0	19558	704	0	483	19558,2	36							
37										37							
38	Perm load 0,9	-45 deg	1a	14930	27013	682	382	678	30863,99	38	x			x			
39	Perm load 0,9	-45 deg	1b	1273	17918	682	35	441	17963,43	39							
40	Perm load 0,9	-45 deg	3	3110	32288	798	80	805	32437,77	40							
41	Perm load 0,9	-45 deg	4	978	18602	704	28	459	18627,52	41							
			Max	14930	37867	1025 682	382	943	37867								

samenvatting

	Mast	Bijlage		Wind	Loadcase	M_{langs}	M_{dwars}	N	V_{langs}	V_{dwars}
14	W2H400+5	08-N	Perm load :	90 deg	3	0	37867	1025	0	943
23	W2H400+5	08-N	Perm load (	0 deg	1b	665	16478	682	23	401
28	W2H400+5	08-N	Perm load (	45 deg	1a	14930	27013	682	382	678

-161- 74100706-ETD/POL 12-00138 REV 003

W2H400+5 TOWER **APPENDIX: N**

Loadcases for tower strength (ultimate limit state)

Loadcase according to 50341-3-15

			AHEAD			BACK		Totaal			Belastingen op mastvoet, per lijn					Belasting op mastvoet, belastinggeval					
								Vert	Dwars	Langs	M_{langs}	M_{dwars}	N	V_{langs}	V_{dwars}		M_{langs}	M_{dwars}	N	V_{langs}	V_{dwars}
	Attachment poir	[N]	[N]	[N]	[N]	[N]	[N]	[kN]	[kN]	[kN]											
1a	380C1F1 / 380(	17046	70458	137544	17046	70458	-137544	34,092	140,916	0	0	7327,632	34,092	0	140,916	1a	0	19527,78	115,96	0	474,882
Wind, 10 dgr	380C1F2 / 380(	17046	69655	136876	17046	69655	-136876	34,092	139,31	0	0	5851,02	34,092	0	139,31	Wind angle: 0 dgr					
Permanent loads yg= 1.2	380C1F3 / 380(	17045	68668	136110	17045	68668	-136110	34,09	137,336	0	0	4394,752	34,09	0	137,336						
Wind angle: 0 dgr	GW / opgw	2226	9796	18590	2226	9796	-18590	4,452	19,592	0	0	1010,883	4,452	0	19,592						
	Comp. gl	4617	18864	37163	4617	18864	-37163	9,234	37,728	0	0	943,4966	9,234	0	37,728						
1b	380C1F1 / 380(	17036	72973	153782	17036	72973	-153782	34,072	145,946	0	0	7589,192	34,072	0	145,946	1b	0	20315,27	115,896	0	494,91
Wind, -20 dgr	380C1F2 / 380(	17036	72875	153781	17036	72875	-153781	34,072	145,75	0	0	6121,5	34,072	0	145,75	Wind angle: 0 dgr					
Permanent loads yg= 1.2	380C1F3 / 380(	17036	72751	153785	17036	72751	-153785	34,072	145,502	0	0	4656,064	34,072	0	145,502						
Wind angle: 0 dgr	GW / opgw	2225	9509	19909	2225	9509	-19909	4,45	19,018	0	0	981,3636	4,45	0	19,018						
	Comp. gl	4615	19347	40832	4615	19347	-40832	9,23	38,694	0	0	967,1553	9,23	0	38,694						
3	380C1F1 / 380(	29376	104312	216126	29376	104312	-216126	58,752	208,624	0	0	10848,45	58,752	0	208,624	3	0	31674,09	232,096	0	783,986
Wind+ice, -5 dgr	380C1F2 / 380(	29376	104020	216089	29376	104020	-216089	58,752	208,04	0	0	8737,68	58,752	0	208,04	Wind angle: 0 dgr					
Permanent loads yg= 1.2	380C1F3 / 380(	29376	103654	216058	29376	103654	-216058	58,752	207,308	0	0	6633,856	58,752	0	207,308						
Wind angle: 0 dgr	GW / opgw	9244	26783	54949	9244	26783	-54949	18,488	53,566	0	0	2768,629	18,488	0	53,566						
	Comp. gl	18676	53224	110761	18676	53224	-110761	37,352	106,448	0	0	2685,481	37,352	0	106,448						
4	380C1F1 / 380(	20053	73762	155471	20053	73762	-155471	40,106	147,524	0	0	7671,248	40,106	0	147,524	4	0	20782,06	138,518	0	507,468
Construction/maintenance, +5 dg	380C1F2 / 380(	20053	73667	155479	20053	73667	-155479	40,106	147,334	0	0	6188,028	40,106	0	147,334	Wind angle: 0 dgr					
Permanent loads yg= 1.2	380C1F3 / 380(	20053	73547	155493	20053	73547	-155493	40,106	147,094	0	0	4707,008	40,106	0	147,094						
Wind angle: 0 dgr	GW / opgw	2978	10784	22643	2978	10784	-22643	5,956	21,568	0	0	1113,639	5,956	0	21,568						
	Comp. gl	6122	21974	46465	6122	21974	-46465	12,244	43,948	0	0	1102,132	12,244	0	43,948						
6	380C1F1 / 380(	19177	68716	147362	19177	68716	-147362	38,354	137,432	0	0	7146,464	38,354	0	137,432	6	0	19187,42	130,462	0	467,774
Permanent, +10 dgr	380C1F2 / 380(	19177	68716	147362	19177	68716	-147362	38,354	137,432	0	0	5772,144	38,354	0	137,432	0					
Permanent loads yg= 1.35	380C1F3 / 380(	19177	68716	147362	19177	68716	-147362	38,354	137,432	0	0	4397,824	38,354	0	137,432						
	GW / opgw	2505	9033	19371	2505	9033	-19371	5,01	18,066	0	0	932,8336	5,01	0	18,066						
	Comp. gl	5195	18706	40116	5195	18706	-40116	10,39	37,412	0	0	938,1533	10,39	0	37,412						
1a	380C1F1 / 380(	17045	67119	135061	17057	130900	-213662	34,102	198,019	-78,601	-4087,25	10296,99	34,102	-78,601	198,019	1a	-10203,5	27001,97	115,993	-242,417	653,147
Wind, 10 dgr	380C1F2 / 380(	17045	66677	134803	17056	124305	-204739	34,101	190,982	-69,936	-2937,31	8021,244	34,101	-69,936	190,982	Wind angle: 45 dgr					
Permanent loads yg= 1.2	380C1F3 / 380(	17045	66131	134516	17054	115909	-193419	34,099	182,04	-58,903	-1884,9	5825,28	34,099	-58,903	182,04						
Wind angle: 45 dgr	GW / opgw	2226	9102	17936	2228	21514	-34170	4,454	30,616	-16,234	-834,817	1577,782	4,454	-16,234	30,616						
	Comp. gl	4617	18081	36619	4620	33409	-55362	9,237	51,49	-18,743	-459,204	1280,672	9,237	-18,743	51,49						
1b	380C1F1 / 380(	17036	72547	153803	17037	79755	-157640	34,073	152,302	-3,837	-199,524	7919,704	34,073	-3,837	152,302	1b	-482,132	21144,31	115,897	-11,223	514,624
Wind, -20 dgr	380C1F2 / 380(	17036	72487	153812	17036	78948	-156952	34,072	151,435	-3,14	-131,88	6360,27	34,072	-3,14	151,435	Wind angle: 45 dgr					
Permanent loads yg= 1.2	380C1F3 / 380(	17036	72410	153824	17036	77958	-156163	34,072	150,368	-2,339	-74,848	4811,776	34,072	-2,339	150,368						
Wind angle: 45 dgr	GW / opgw	2225	9428	19902	2225	10900	-20985	4,45	20,328	-1,083	-55,6922	1048,729	4,45	-1,083	20,328						
	Comp. gl	4615	19245	40840	4615	20946	-41664	9,23	40,191	-0,824	-20,188	1003,832	9,23	-0,824	40,191						
3	380C1F1 / 380(	29376	103058	216048	29381	125336	-231339	58,757	228,394	-15,291	-795,132	11876,49	58,757	-15,291	228,394	3	-1912,33	34404,73	232,114	-44,58	849,494
Wind+ice, -5 dgr	380C1F2 / 380(	29376	102881	216055	29380	122823	-228863	58,756	225,704	-12,808	-537,936	9479,568	58,756	-12,808	225,704	Wind angle: 45 dgr					
Permanent loads yg= 1.2	380C1F3 / 380(	29376	102659	216072	29379	119728	-225957	58,755	222,387	-9,885	-316,32	7116,384	58,755	-9,885	222,387						
Wind angle: 45 dgr	GW / opgw	9244	26385	54955	9247	33116	-58719	18,491	59,501	-3,764	-193,56	3073,833	18,491	-3,764	59,501						
	Comp. gl	18676	52715	110835	18679	60793	-113667	37,355	113,508	-2,832	-69,384	2858,458	37,355	-2,832	113,508						
4	380C1F1 / 380(	20053	73350	155525	20053	79986	-158127	40,106	153,336	-2,602	-135,304	7973,472	40,106	-2,602	153,336	4	-311,911	21536,17	138,518	-7,188	525,406
Construction/maintenance, +5 dg	380C1F2 / 380(	20053	73291	155536	20053	79261	-157616	40,106	152,552	-2,08	-87,36	6407,184	40,106	-2,08	152,552	Wind angle: 45 dgr					
Permanent loads yg= 1.2	380C1F3 / 380(	20053	73217	155553	20053	78368	-157037	40,106	151,585	-1,484	-47,488	4850,72	40,106	-1,484	151,585						
Wind angle: 45 dgr	GW / opgw	2978	10709	22648	2978	11966	-23269	5,956	22,675	-0,621	-31,9343	1170,566	5,956	-0,621	22,675						
	Comp. gl	6122	21877	46484	6122	23381	-46885	12,244	45,258	-0,401	-9,8245	1134,227	12,244	-0,401	45,258						
1a	380C1F1 / 380(	17056	124980	205651	17056	124980	-205651	34,112	249,96	0	0	12997,92	34,112	0	249,96	1a	0	33783,9	116,024	0	814,698
Wind, 10 dgr	380C1F2 / 380(	17055	118872	197406	17055	118872	-197406	34,11	237,744	0	0	9985,248	34,11	0	237,744	Wind angle: 90 dgr					
Permanent loads yg= 1.2	380C1F3 / 380(	17053	111117	186995	17053	111117	-186995	34,106	222,234	0	0	7111,488	34,106	0	222,234						
Wind angle: 90 dgr	GW / opgw	2228	20429	32679	2228	20429	-32679	4,456	40,858	0	0	2104,468	4,456	0	40,858						
	Comp. gl	4620	31951	53373	4620	31951	-53373	9,24	63,902	0	0	1584,772	9,24	0	63,902						
1b	380C1F1 / 380(	17036	79030	157020	17036	79030	-157020	34,072	158,06	0	0	8219,12	34,072	0	158,06	1b	0	21896,78	115,896	0	532,534
Wind, -20 dgr	380C1F2 / 380(	17036	78303	156430	17036	78303	-156430	34,072	156,606	0	0	6577,452	34,072	0	156,606	Wind angle: 90 dgr					
Permanent loads yg= 1.2	380C1F3 / 380(	17036	77410	155757	17036	77410	-155757	34,072	154,82	0	0	4954,24	34,072	0	154,82						
Wind angle: 90 dgr	GW / opgw	2225	10748	20825	2225	10748	-20825	4,45	21,496	0	0	1108,792	4,45	0	21,496						
	Comp. gl	4615	20776	41527	4615	20776	-41527	9,23	41,552	0	0	1037,176	9,23	0	41,552						
3	380C1F1 / 380(	29380	123077	229108	29380	123077	-229108	58,76	246,154	0	0	12800,01	58,76	0	246,154	3	0	36870,14	232,126	0	908,716
Wind+ice, -5 dgr	380C1F2 / 380(	29380	120807	226950	29380	120807	-226950	58,76	241,614	0	0	10147,79	58,76	0	241,614	Wind angle: 90 dgr					
Permanent loads yg= 1.2	380C1F3 / 380(	29379	118012	224428	29379	118012	-224428	58,758	236,024	0	0	7552,768	58,758	0	236,024						
Wind angle: 90 dgr	GW / opgw	9246	32450	58151	9246	32450	-58151	18,492	64,9	0	0	3351,472	18,492	0	64,9						
	Comp. gl	18678	60012	113159	18678	60012	-113159	37,356	120,024	0	0	3018,102	37,356	0	120,024						
4	380C1F1 / 380(	20053	79334	157666	20053	79334	-157666	40,106	158,668	0	0	8250,736	40,106	0	158,668	4	0	22229,93	138,518	0	541,926
Construction/maintenance, +5 dg	380C1F2 / 380(	20053	78680	157232	20053	78680	-157232	40,106	157,36	0	0	6609,12	40,106	0	157,36	Wind angle: 90 dgr					
Permanent loads yg= 1.2	380C1F3 / 380(	20053	77872	156743	20053	77872	-156743	40,106	155,744	0	0	4983,808	40,106	0	155,744						
Wind angle: 90 dgr	GW / opgw	2978	11840	23167	2978	11840	-23167	5,956	23,68	0	0	1222,247	5,956	0	23,68						
	Comp. gl	6122	23237	46803	6122	23237	-46803	12,244	46,474	0	0	1164,019	12,244	0	46,474						
1a	380C1F1 / 380(	17057	130900	213662	17045	67119	-135061	34,102	198,019	78,601	4087,252	10296,99	34,102	78,601	198,019	1a	10203,48	27001,97	115,993	242,417	653,147
Wind, 10 dgr	380C1F2 / 380(	17056	124305	204739	17045	66677	-134803	34,101	190,982	69,936	2937,312	8021,244	34,101	69,936	190,982	Wind angle: -45 dgr					
Permanent loads yg= 1.2	380C1F3 / 380(	17054	115909	193419	17045	66131	-134516	34,099	182,04	58,903	1884,896	5825,28	34,099	58,903	182,04						
Wind angle: -45 dgr	GW / opgw	2228	21514	34170	2226	9102	-17936	4,454	30,616	16,234	834,8172	1577,782	4,454	16,234	30,616						
	Comp. gl	4620	33409	55362	4617	18081	-36619	9,237	51,49	18,743	459,2035	1280,672	9,237	18,743	51,49						
1b	380C1F1 / 380(	17037	79755	157640	17036	72547	-153803	34,073	152,302	3,837	199,524	7919,704	34,073	3,837	152,302	1b	482,1322	21144,31	115,897	11,223	514,624
Wind, -20 dgr	380C1F2 / 380(	17036	78948	156952	17036	72487	-153812	34,072	151,435	3,14	131,88	6360,27	34,072	3,14	151,435	Wind angle: -45 dgr					
Permanent loads yg= 1.2	380C1F3 / 380(	17036	77958	156163	17036	72410	-153824	34,072	150,368	2,339	74,848	4811,776	34,072	2,339	150,368						
Wind angle: -45 dgr	GW / opgw	2225	10900	20985	2225	9428	-19902	4,45	20,328	1,083	55,69219	1048,729	4,45	1,083	20,328						
	Comp. gl	4615	20946	41664	4615	19245	-40840	9,23	40,191	0,824	20,188	1003,832	9,23	0,824	40,191						
3	380C1F1 / 380(	29381	125336	231339	29376	103058	-216048	58,757	228,394	15,291	795,132	11876,49	58,757	15,291	228,394	3	1912,332	34404,73	232,114	44,58	849,494
Wind+ice, -5 dgr	380C1F2 / 380(	29380	122823	228863	29376	102881	-216055	58,756	225,704	12,808	537,936	9479,568	58,756	12,808	225,704	Wind angle: -45 dgr					
Permanent loads yg= 1.2	380C1F3 / 380(	29379	119728	225957	29376	102659	-216072	58,755	222,387	9,885	316,32	7116,384	58,755	9,885	222,387						
Wind angle: -45 dgr	GW / opgw	9247	33116	58719	9244	26385	-54955	18,491	59,501	3,764	193,5599	3073,833	18,491	3,764	59,501						
	Comp. gl	18679	60793	113667	18676	52715	-110835	37,355	113,508	2,832	69,384	2858,458	37,355	2,832	113,508						
4	380C1F1 / 380(	20053	79986	158127	20053	73350	-155525	40,106	153,336	2,602	135,304	7973,472	40,106	2,602	153,336	4	311,9108	21536,17	138,518	7,188	525,406
Construction/maintenance, +5 dg	380C1F2 / 380(	20053	79261	157616	20053	73291	-155536	40,106	152,552	2,08	87,36	6407,184	40,106	2,08	152,552	Wind angle: -45 dgr					
Permanent loads yg= 1.2	380C1F3 / 380(	20053	78368	157037	20053	73217	-155553	40,106	151,585	1,484	47,488	4850,72	40,106	1,484	151,585						
Wind angle: -45 dgr	GW / opgw	2978	11966	23269	2978	10709	-22648	5,956	22,675	0,621	31,9343	1170,566	5,956	0,621	22,675						
	Comp. gl	6122	23381	46885	6122	21877	-46484	12,244	45,258	0,401	9,8245	1134,227	12,244	0,401	45,258						
1a	380C1F1 / 380(	12782	58487	111876	12782	58487	-111876	25,564	116,974	0	0	6082,648	25,564	0	116,974	1a	0	16151,74	86,952	0	392,344
Wind, 10 dgr	380C1F2 / 380(	12782	57534	110884	12782	57534	-110884	25,564	115,068	0	0	4832,856	25,564	0	115,068	Wind angle: 0 dgr					
Permanent loads yg=0.9	380C1F3 / 380(	12781	56365	109729	12781	56365	-109729	25,562	112,73	0	0	3607,36	25,562	0	112,73						
Wind angle: 0 dgr	GW / opgw	1669	8291	15363	1669	8291	-15363	3,338	16,582	0	0	855,2496	3,338	0	16,582						
	Comp. gl	3462	15495	29938	3462	15495	-29938	6,924	30,99	0	0	773,6223	6,924	0	30,99						
1b	380C1F1 / 380(	12774	59266	124389	12774	59266	-124389	25,548	118,532	0	0	6163,664	25,548	0	118,532	1b	0	16477,74	86,902	0	401,33
Wind, -20 dgr	380C1F2 / 380(	12774	59160	124371	12774	59160	-124371	25,548	118,32	0	0	4969,44	25,548	0	118,32	Wind angle: 0 dgr					
Permanent loads yg=0.9	380C1F3 / 380(	12774	59026	124354	12774	59026	-124354	25,548	118,052	0	0	3777,664	25,548	0	118,052						
Wind angle: 0 dgr	GW / opgw	1668	7663	15950	1668	7663	-15950	3,336	15,326	0	0	790,6596	3,336	0	15,326						
	Comp. gl	3461	15550	32688	3461	15550	-32688	6,922	31,1	0	0	776,3132	6,922	0	31,1						
3	380C1F1 / 380(	25109	93214	192328	25109	93214	-192328	50,218	186,428	0	0	9694,256	50,218	0	186,428	3	0	28637,1	203,06	0	710,346
Wind+ice, -5 dgr	380C1F2 / 380(	25109	92908	192258	25109	92908	-192258	50,218	185,816	0	0	7804,272	50,218	0	185,816	Wind angle: 0 dgr					
Permanent loads yg=0.9	380C1F3 / 380(	25109	92524	192190	25109	92524	-192190	50,218	185,048	0	0	5921,536	50,218	0	185,048						
Wind angle: 0 dgr	GW / opgw	8685	25652	52524	8685	25652	-52524	17,37	51,304	0	0	2651,458	17,37	0	51,304						
	Comp. gl	17518	50875	105724	17518	50875	-105724	35,036	101,75	0	0	2565,575	35,036	0	101,75						
4	380C1F1 / 380(	15788	61248	128638	15788	61248	-128638	31,576	122,496	0	0	6369,792	31,576	0	122,496	4	0	17291,09	109,502	0	422,416
Construction/maintenance, +5 dg	380C1F2 / 380(	15788	61149	128635	15788	61149	-128635	31,576	122,298	0	0	5136,516	31,576	0	122,298	Wind angle: 0 dgr					
Permanent loads yg=0.9	380C1F3 / 380(	15788	61023	128636	15788	61023	-128636	31,576	122,046	0	0	3905,472	31,576	0	122,046						
Wind angle: 0 dgr	GW / opgw	2421	9163	19167	2421	9163	-19167	4,842	18,326	0	0	946,0761	4,842	0	18,326						
	Comp. gl	4966	18625	39284	4966	18625	-39284	9,932	37,25	0	0	933,2339	9,932	0	37,25						
6	380C1F1 / 380(	12781	49433	106010	12781	49433	-106010	25,562	98,866	0	0	5141,032	25,562	0	98,866	6	0	13791,45	86,948	0	336,214
Permanent, +10 dgr	380C1F2 / 380(	12781	49433	106010	12781	49433	-106010	25,562	98,866	0	0	4152,372	25,562	0	98,866	0					

Permanent loads γg= 1.35	380C1/F3 / 380C12781	49433	106010	12781	49433	-106010	25,562	98,866	0	0	3163,712	25,562	0	98,866											
	GW / γqgw	1669	6441	13813	1669	6441	-13813	3,338	12,882	0	0	664,9808	3,338	0	12,882										
	Comp. gl	3462	13357	28666	3462	13357	-28666	6,924	26,734	0	0	669,3503	6,924	0	26,734										
1a	380C1/F1 / 380C12781	54545	108097	12792	126013	-203187	25,573	180,558	-95,09	-4944,68	9389,016	25,573	-95,09	180,558	1a	-12424,2	24506,54	86,982	-296,07	591,966					
Wind, 10 dgr	380C1/F2 / 380C12781	54030	107683	12791	119007	-193383	25,572	173,037	-85,7	-3599,4	7267,554	25,572	-85,7	173,037	Wind angle: 45 dgr										
Permanent loads γg=0.9	380C1/F3 / 380C12781	53398	107211	12789	110005	-180763	25,57	163,403	-73,552	-2353,66	5228,896	25,57	-73,552	163,403											
Wind angle: 45 dgr	GW / γqgw	1669	7466	14428	1671	21038	-33151	3,34	28,504	18,723	-962,812	1468,328	3,34	-18,723	28,504										
	Comp. gl	3462	14575	29100	3465	31889	-52105	6,927	46,464	-23,005	-563,623	1152,742	6,927	-23,005	46,464										
1b	380C1/F1 / 380C12774	58810	124344	12775	67185	-130687	25,549	125,995	-6,343	-329,836	6551,74	25,549	-6,343	125,995	1b	-802,859	17448,41	86,905	-18,788	424,385					
Wind, -20 dgr	380C1/F2 / 380C12774	58746	124344	12775	66217	-129653	25,549	124,963	-5,309	-222,978	5248,446	25,549	-5,309	124,963	Wind angle: 45 dgr										
Permanent loads γg=0.9	380C1/F3 / 380C12774	58665	124348	12774	65032	-128446	25,548	123,697	-4,098	-131,136	3958,304	25,548	-4,098	123,697											
Wind angle: 45 dgr	GW / γqgw	1668	7574	15927	1669	9312	-17579	3,337	16,886	-1,652	-84,9524	870,8818	3,337	-1,652	16,886										
	Comp. gl	3461	15441	32882	3461	17403	-34068	6,922	32,844	-1,386	-33,957	819,0412	6,922	-1,386	32,844										
3	380C1/F1 / 380C25109	91902	192127	25114	116591	-211518	50,223	207,993	-19,391	-1008,33	10815,64	50,223	-19,391	207,993	3	-2404,78	31583,57	203,077	-56,131	780,918					
Wind+ice, -5 dgr	380C1/F2 / 380C25109	91720	192120	25113	113341	-208533	50,222	205,061	-16,413	-689,346	8612,562	50,222	-16,413	205,061	Wind angle: 45 dgr										
Permanent loads γg=0.9	380C1/F3 / 380C25109	91490	192121	25112	109949	-204991	50,221	201,439	-12,87	-411,84	6446,048	50,221	-12,87	201,439											
Wind angle: 45 dgr	GW / γqgw	8685	25248	52517	8688	32173	-56938	17,373	57,421	-4,181	-215,004	2966,021	17,373	-4,181	57,421										
	Comp. gl	17518	50360	105786	17520	58644	-109062	35,038	109,004	-3,276	-80,262	2743,302	35,038	-3,276	109,004										
4	380C1/F1 / 380C15788	60818	128650	15789	68194	-132843	31,577	129,012	-4,193	-218,036	6708,624	31,577	-4,193	129,012	4	-508,161	18131,95	109,503	-11,794	442,39					
Construction maintenance, +5 dg	380C1/F2 / 380C15788	60757	128657	15788	67394	-132105	31,576	128,121	-3,448	-144,816	5381,082	31,576	-3,448	128,121	Wind angle: 45 dgr										
Permanent loads γg=0.9	380C1/F3 / 380C15788	60680	128668	15788	66345	-131256	31,576	127,025	-2,588	-82,816	4064,8	31,576	-2,588	127,025											
Wind angle: 45 dgr	GW / γqgw	2421	9084	19165	2421	10470	-20062	4,842	19,554	-0,897	-46,1273	1009,225	4,842	-0,897	19,554										
	Comp. gl	4966	18525	39296	4966	20153	-39964	9,932	38,678	-0,668	-16,366	968,2199	9,932	-0,668	38,678										
1a	380C1/F1 / 380C12791	119726	194390	12791	119726	-194390	25,582	239,452	0	0	12451,5	25,582	0	239,452	1a	0	32218,86	87,01	0	775,948					
Wind, 10 dgr	380C1/F2 / 380C12790	113193	185234	12790	113193	-185234	25,58	226,386	0	0	9508,212	25,58	0	226,386	Wind angle: 90 dgr										
Permanent loads γg=0.9	380C1/F3 / 380C12789	104817	173489	12789	104817	-173489	25,578	209,634	0	0	6708,288	25,578	0	209,634											
Wind angle: 90 dgr	GW / γqgw	1671	19913	31574	1671	19913	-31574	3,342	39,826	0	0	2050,552	3,342	0	39,826										
	Comp. gl	3464	30325	49888	3464	30325	-49888	6,928	60,65	0	0	1500,301	6,928	0	60,65										
1b	380C1/F1 / 380C12775	66315	129755	12775	66315	-129755	25,55	132,63	0	0	6896,76	25,55	0	132,63	1b	0	18312,91	86,906	0	444,934					
Wind, -20 dgr	380C1/F2 / 380C12774	65444	128858	12774	65444	-128858	25,548	130,888	0	0	5497,296	25,548	0	130,888	Wind angle: 90 dgr										
Permanent loads γg=0.9	380C1/F3 / 380C12774	64379	127815	12774	64379	-127815	25,548	128,758	0	0	4120,256	25,548	0	128,758											
Wind angle: 90 dgr	GW / γqgw	1669	9129	17354	1669	9129	-17354	3,338	18,258	0	0	941,4363	3,338	0	18,258										
	Comp. gl	3461	17200	33860	3461	17200	-33860	6,922	34,4	0	0	857,1632	6,922	0	34,4										
3	380C1/F1 / 380C25113	113919	208830	25113	113919	-208830	50,226	227,238	0	0	11816,38	50,226	0	227,238	3	0	34226,13	203,09	0	844,288					
Wind+ice, -5 dgr	380C1/F2 / 380C25112	111132	206207	25112	111132	-206207	50,224	222,264	0	0	9335,088	50,224	0	222,264	Wind angle: 90 dgr										
Permanent loads γg=0.9	380C1/F3 / 380C25112	108069	203109	25112	108069	-203109	50,224	216,138	0	0	6916,416	50,224	0	216,138											
Wind angle: 90 dgr	GW / γqgw	8688	31486	56094	8688	31486	-56094	17,376	62,972	0	0	3251,478	17,376	0	62,972										
	Comp. gl	17520	57838	108499	17520	57838	-108499	35,04	115,676	0	0	2906,77	35,04	0	115,676										
4	380C1/F1 / 380C15788	67448	132178	15788	67448	-132178	31,576	134,896	0	0	7014,592	31,576	0	134,896	4	0	18893,7	109,502	0	460,504					
Construction maintenance, +5 dg	380C1/F2 / 380C15788	66700	131544	15788	66700	-131544	31,576	133,4	0	0	5602,8	31,576	0	133,4	Wind angle: 90 dgr										
Permanent loads γg=0.9	380C1/F3 / 380C15788	65782	130818	15788	65782	-130818	31,576	131,564	0	0	4210,048	31,576	0	131,564											
Wind angle: 90 dgr	GW / γqgw	2421	10329	19926	2421	10329	-19926	4,842	20,658	0	0	1065,997	4,842	0	20,658										
	Comp. gl	4966	19993	38647	4966	19993	-38647	9,932	39,986	0	0	1000,266	9,932	0	39,986										
1a	380C1/F1 / 380C12792	126013	203187	12791	54545	-108097	25,573	180,558	95,09	4944,68	9389,016	25,573	95,09	180,558	1a	12424,18	24506,54	86,982	296,07	591,966					
Wind, 10 dgr	380C1/F2 / 380C12791	119007	193383	12781	54030	-107683	25,572	173,037	85,7	3599,4	7267,554	25,572	85,7	173,037	Wind angle: -45 dgr										
Permanent loads γg=0.9	380C1/F3 / 380C12789	110005	180763	12781	53398	-107211	25,57	163,403	73,552	2353,664	5228,896	25,57	73,552	163,403											
Wind angle: -45 dgr	GW / γqgw	1671	21038	33151	1669	7466	-14428	3,34	28,504	18,723	962,8116	1468,328	3,34	18,723	28,504										
	Comp. gl	3465	31889	52105	3462	14575	-29100	6,927	46,464	23,005	563,6225	1152,742	6,927	23,005	46,464										
1b	380C1/F1 / 380C12775	67185	130687	12774	58810	-124344	25,549	125,995	6,343	329,836	6551,74	25,549	6,343	125,995	1b	802,8594	17448,41	86,905	18,788	424,385					
Wind, -20 dgr	380C1/F2 / 380C12775	66217	129653	12774	58746	-124344	25,549	124,963	5,309	222,978	5248,446	25,549	5,309	124,963	Wind angle: -45 dgr										
Permanent loads γg=0.9	380C1/F3 / 380C12774	65032	128446	12774	58665	-124348	25,548	123,697	4,098	131,136	3958,304	25,548	4,098	123,697											
Wind angle: -45 dgr	GW / γqgw	1669	9312	17579	1668	7574	-15927	3,337	16,886	1,652	84,95245	870,8818	3,337	1,652	16,886										
	Comp. gl	3461	17403	34068	3461	15441	-32682	6,922	32,844	1,386	33,957	819,0412	6,922	1,386	32,844										
3	380C1/F1 / 380C25114	116591	211518	25109	91902	-192127	50,223	207,993	19,391	1008,332	10815,64	50,223	19,391	207,993	3	2404,784	31583,57	203,077	56,131	780,918					
Wind+ice, -5 dgr	380C1/F2 / 380C25113	113341	208533	25109	91720	-192120	50,222	205,061	16,413	689,346	8612,562	50,222	16,413	205,061	Wind angle: -45 dgr										
Permanent loads γg=0.9	380C1/F3 / 380C25112	109949	204991	25109	91490	-192121	50,221	201,439	12,87	411,84	6446,048	50,221	12,87	201,439											
Wind angle: -45 dgr	GW / γqgw	8688	32173	56938	8685	25248	-52517	17,373	57,421	4,181	215,0037	2966,021	17,373	4,181	57,421										
	Comp. gl	17520	58644	109062	17518	50360	-105786	35,038	109,004	3,276	80,262	2743,302	35,038	3,276	109,004										
4	380C1/F1 / 380C15789	68194	132843	15788	60818	-128650	31,577	129,012	4,193	218,036	6708,624	31,577	4,193	129,012	4	508,1613	18131,95	109,503	11,794	442,39					
Construction maintenance, +5 dg	380C1/F2 / 380C15788	67394	132105	15788	60757	-128657	31,576	128,121	3,448	144,816	5381,082	31,576	3,448	128,121	Wind angle: -45 dgr										
Permanent loads γg=0.9	380C1/F3 / 380C15788	66345	131256	15788	60680	-128668	31,576	127,025	2,588	82,816	4064,8	31,576	2,588	127,025											
Wind angle: -45 dgr	GW / γqgw	2421	10470	20062	2421	9084	-19165	4,842	19,554	0,897	46,12733	1009,225	4,842	0,897	19,554										
	Comp. gl	4966	20153	39964	4966	18525	-39296	9,932	38,678	0,668	16,366	968,2199	9,932	0,668	38,678										

		Hoogte	Excentriciteit ophanging t.o.v. hart mast
Hoogte mast		52 m	
Hoogte onderste stroomdraad (F3)		26 m	
Bliksemdraad = GW / (H_{mast} -	0,576 m =	51,424 m	0,76 m
1e traverse - 380C1F1 F2 +	10 m =	52 m	0 m
2e traverse - 380C1F2 F3 +	10 m =	42 m	0 m
3e traverse - 380C1F3		32 m	0 m
Passieve lijn = Comp C F3 -	7,5 m =	24,5 m	2,075 m

Uit mast (excl belastingsfactoren)			Uit lijnen (incl belastingsfactoren)				
N	V	M	Nmin	Nmax	Vmax	Mlangs;max	Mdwars;max
[kN]	[kN]	[kNm]	[kN]	[kN]	[kN]	[kNm]	[kNm]
327	85	2159	43	71	627	25589	13974

			Belastingen uit lijnen					Belasting uit mast		
			M_{langs}	M_{dwars}	N	V_{langs}	V_{dwars}	N	V	M
Perm load 1,2	0 deg	1a	18731	9180	58	457	224	327	85	2159
		1b	21402	10125	58	522	247	327	16	405
		3	23126	11212	71	568	275	327	24	607
		4	21340	10099	67	522	247	327	16	405
		6	20547	9594	65	502	234			
	45 deg	1a	18670	9002	58	456	219	327	85	2159
		1b	21408	10081	58	522	246	327	16	405
		3	23095	11056	71	568	271	327	24	607
		4	21349	10057	67	522	246	327	16	405
	90 deg	1a	21715	12135	58	527	294	327	85	2159
		1b	21630	10712	58	527	261	327	16	405
		3	25252	13675	71	619	334	327	24	607
		4	21488	10649	67	525	260	327	16	405
	-45 deg	1a	22159	12492	58	538	302	327	85	2159
		1b	21678	10780	58	529	262	327	16	405
		3	**25589**	**13974**	**71**	**627**	**342**	327	24	607
		4	21523	10712	67	526	261	327	16	405
Perm load 0,9	0 deg	1a	14902	7392	43	364	180	245	85	2159
		1b	17288	8203	**43**	422	200	245	16	405
		3	19386	9465	56	477	232	245	24	607
		4	17562	8334	52	430	204	245	16	405
		6	**14770**	**6896**	43	**361**	**168**			
	45 deg	1a	14790	7190	43	361	175	245	85	2159
		1b	17288	8158	**43**	422	199	245	16	405
		3	19326	9296	56	476	228	245	24	607
		4	17567	8290	52	430	202	245	16	405
	90 deg	1a	18985	10859	43	460	262	245	85	2159
		1b	17697	8875	**43**	431	216	245	16	405
		3	22235	12265	56	545	300	245	24	607
		4	17827	8939	52	436	218	245	16	405
	-45 deg	1a	19539	11268	43	473	272	245	85	2159
		1b	17772	8956	**43**	433	218	245	16	405
		3	22658	12604	56	555	308	245	24	607
		4	17881	9010	52	437	220	245	16	405

regel			Loadcase	Totaal M_{langs}	M_{dwars}	N	V_{langs}	V_{dwars}	Totaal moment							
1	Perm load 1,2	0 deg	1a	20890	9180	385	542	224	22818,53	1						
2	Perm load 1,2	0 deg	1b	21807	10125	385	538	247	24042,5	2						
3	Perm load 1,2	0 deg	3	23733	11212	398	592	275	26248,49	3						
4	Perm load 1,2	0 deg	4	21745	10099	394	538	247	23975,91	4						
5	Perm load 1,2	0 deg	6							5						
6										6						
7	Perm load 1,2	45 deg	1a	20197	10528	385	516	279	22776,05	7						
8	Perm load 1,2	45 deg	1b	21694	10368	385	534	257	24043,9	8						
9	Perm load 1,2	45 deg	3	23524	11485	398	584	288	26178,06	9						
10	Perm load 1,2	45 deg	4	21635	10343	394	533	257	23980,05	10						
11										11						
12	Perm load 1,2	90 deg	1a	21715	14294	385	527	379	25997,25	12					x	
13	Perm load 1,2	90 deg	1b	21630	11117	385	527	277	24319,37	13						
14	Perm load 1,2	90 deg	3	25252	14283	398	619	358	29011,31	14						
15	Perm load 1,2	90 deg	4 Construc	21488	11054	394	525	276	24164,19	15						
16										16						
17	Perm load 1,2	-45 deg	1a	23686	14019	385	598	362	27523,45	17						
18	Perm load 1,2	-45 deg	1b	21964	11067	385	540	274	24594,94	18						
19	Perm load 1,2	-45 deg	3	26019	14403	398	644	358	29739,43	19	x	x	x	x		x
20	Perm load 1,2	-45 deg	4	21810	10998	394	537	272	24425,71	20						
21										21						
22	Perm load 0,9	0 deg	1a	17061	7392	289	449	180	18593,33	22						
23	Perm load 0,9	0 deg	1b	17693	8203	289	438	200	19502,06	23						
24	Perm load 0,9	0 deg	3	19993	9465	302	501	232	22119,89	24						
25	Perm load 0,9	0 deg	4	17967	8334	298	446	204	19805,75	25						
26	Perm load 0,9	0 deg	6							26						
27										27						
28	Perm load 0,9	45 deg	1a	16317	8716	289	421	235	18498,9	28						
29	Perm load 0,9	45 deg	1b	17574	8444	289	433	210	19497,65	29						
30	Perm load 0,9	45 deg	3	19755	9725	302	493	245	22019,07	30						
31	Perm load 0,9	45 deg	4 Construc	17853	8577	298	441	214	19806,14	31						
32										32						
33	Perm load 0,9	90 deg	1a	18985	13018	289	460	347	23019,83	33						
34	Perm load 0,9	90 deg	1b	17697	9280	289	431	232	19982,02	34						
35	Perm load 0,9	90 deg	3	22235	12873	302	545	324	25692,11	35						
36	Perm load 0,9	90 deg	4	17827	9344	298	436	234	20127,45	36						
37										37						
38	Perm load 0,9	-45 deg	1a	21066	12794	289	533	332	24647	38						
39	Perm load 0,9	-45 deg	1b	18059	9242	289	444	229	20286,37	39						
40	Perm load 0,9	-45 deg	3	23087	13033	302	572	325	26511,66	40						
41	Perm load 0,9	-45 deg	4	18167	9297	298	448	231	20407,83	41						
			Max	26019	14403	398	644	379	29739							

samenvatting

	Mast	Bijlage		Wind	Loadcase	M_{langs}	M_{dwars}	N	V_{langs}	V_{dwars}
12	W2H400+5	08-N1	Perm load	90 deg	1a	21715	14294	385	527	379
19	W2H400+5	08-N1	Perm load	-45 deg	3	26019	14403	398	644	358

-167- 74100706-ETD/POL 12-00138 REV 003

W2H400+ TOWER **APPENDIN1**

Loadcases for tower strength (special limit state)

Loadcase according to 50341-3-15

			AHEAD			BACK		Totaal Vert	Dwars	Langs	Belastingen op mastvoet, per lijn M_{langs}	M_{dwars}	N	V_{langs}	V_{dwars}		Belasting op mastvoet, belastinggeval M_{langs}	M_{dwars}	N	V_{langs}	V_{dwars}
	Attachment	[N]	[N]	[N]	[N]	[N]	[N]	[kN]	[kN]	[kN]											
1a	380C1F1	17045	65978	134443	0	0	0	17,045	65,978	134,443	6991,036	3430,856	17,045	134,443	65,978	1a	18731,39	9180,239	57,978	457,131	223,568
Wind, 10 dgr	380C1F2	17045	65655	134298	0	0	0	17,045	65,655	134,298	5640,516	2757,51	17,045	134,298	65,655	Wind angle: 0 dgr					
Permanent loads yg	380C1F3	17045	65254	134141	0	0	0	17,045	65,254	134,141	4292,512	2088,128	17,045	134,141	65,254						
Wind angle: 0 dgr	GW / opgw	2226	8869	17762	0	0	0	2,226	8,869	17,762	913,3931	457,7712	2,226	17,762	8,869						
	Comp. gl	4617	17812	36487	0	0	0	4,617	17,812	36,487	893,9315	445,9743	4,617	36,487	17,812						
1b	380C1F1	17036	72723	153787	0	0	0	17,036	72,723	153,787	7996,924	3781,596	17,036	153,787	72,723	1b	21401,88	10124,72	57,948	522,121	246,669
Wind, -20 dgr	380C1F2	17036	72647	153793	0	0	0	17,036	72,647	153,793	6459,306	3051,174	17,036	153,793	72,647	Wind angle: 0 dgr					
Permanent loads yg	380C1F3	17036	72551	153803	0	0	0	17,036	72,551	153,803	4921,696	2321,632	17,036	153,803	72,551						
Wind angle: 0 dgr	GW / opgw	2225	9461	19903	0	0	0	2,225	9,461	19,903	1023,492	488,2135	2,225	19,903	9,461						
	Comp. gl	4615	19287	40835	0	0	0	4,615	19,287	40,835	1000,458	482,1076	4,615	40,835	19,287						
3	380C1F1	19802	77768	160718	0	0	0	19,802	77,768	160,718	8357,336	4043,936	19,802	160,718	77,768	3	23126,2	11211,96	70,964	568,26	274,92
Wind+ice, -5 dgr	380C1F2	19802	77517	160650	0	0	0	19,802	77,517	160,65	6747,3	3255,714	19,802	160,65	77,517	Wind angle: 0 dgr					
Permanent loads yg	380C1F3	19802	77203	160581	0	0	0	19,802	77,203	160,581	5138,592	2470,496	19,802	160,581	77,203						
Wind angle: 0 dgr	GW / opgw	3796	14234	28538	0	0	0	3,796	14,234	28,538	1467,538	734,8542	3,796	28,538	14,234						
	Comp. gl	7762	28198	57773	0	0	0	7,762	28,198	57,773	1415,439	706,9572	7,762	57,773	28,198						
4	380C1F1	19451	71802	151812	0	0	0	19,451	71,802	151,812	7894,224	3733,704	19,451	151,812	71,802	4	21340,38	10099,05	67,002	521,837	246,538
Construction/mainte	380C1F2	19451	71728	151822	0	0	0	19,451	71,728	151,822	6376,524	3012,576	19,451	151,822	71,728	Wind angle: 0 dgr					
Permanent loads yg	380C1F3	19451	71635	151838	0	0	0	19,451	71,635	151,838	4858,816	2292,32	19,451	151,838	71,635						
Wind angle: 0 dgr	GW / opgw	2828	10310	21723	0	0	0	2,828	10,31	21,723	1117,084	532,3307	2,828	21,723	10,31						
	Comp. gl	5821	21063	44642	0	0	0	5,821	21,063	44,642	1093,729	528,1221	5,821	44,642	21,063						
6	380C1F1	19177	68716	147362	0	0	0	19,177	68,716	147,362	7662,824	3573,232	19,177	147,362	68,716	6	20546,59	9593,709	65,231	501,573	233,887
Permanent, +10 dgr	380C1F2	19177	68716	147362	0	0	0	19,177	68,716	147,362	6189,204	2886,072	19,177	147,362	68,716	0					
Permanent loads yg	380C1F3	19177	68716	147362	0	0	0	19,177	68,716	147,362	4715,584	2198,912	19,177	147,362	68,716						
	GW / opgw	2505	9033	19371	0	0	0	2,505	9,033	19,371	996,1343	466,4168	2,505	19,371	9,033						
	Comp. gl	5195	18706	40116	0	0	0	5,195	18,706	40,116	982,842	469,0766	5,195	40,116	18,706						
1a	380C1F1	17045	64613	133947	0	0	0	17,045	64,613	133,947	6965,244	3359,876	17,045	133,947	64,613	1a	18669,93	9001,728	57,978	455,712	219,317
Wind, 10 dgr	380C1F2	17045	64427	133907	0	0	0	17,045	64,427	133,907	5624,094	2705,934	17,045	133,907	64,427	Wind angle: 45 dgr					
Permanent loads yg	380C1F3	17045	64193	133866	0	0	0	17,045	64,193	133,866	4283,712	2054,176	17,045	133,866	64,193						
Wind angle: 45 dgr	GW / opgw	2226	8595	17608	0	0	0	2,226	8,595	17,608	905,4738	443,681	2,226	17,608	8,595						
	Comp. gl	4617	17489	36384	0	0	0	4,617	17,489	36,384	891,408	438,0608	4,617	36,384	17,489						
1b	380C1F1 / 17036		72393	153827	0	0	0	17,036	72,393	153,827	7999,004	3764,436	17,036	153,827	72,393	1b	21407,6	10081,32	57,948	522,264	245,632
Wind, -20 dgr	380C1F2 / 17036		72346	153837	0	0	0	17,036	72,346	153,837	6461,154	3038,532	17,036	153,837	72,346	Wind angle: 45 dgr					
Permanent loads yg=	380C1F3 / 17036		72286	153850	0	0	0	17,036	72,286	153,85	4923,2	2313,152	17,036	153,85	72,286						
Wind angle: 45 dgr	GW / opgw	2225	9399	19903	0	0	0	2,225	9,399	19,903	1023,492	485,0252	2,225	19,903	9,399						
	Comp. gl	4615	19208	40847	0	0	0	4,615	19,208	40,847	1000,752	480,1721	4,615	40,847	19,208						
3	380C1F1 / 19802		76696	160509	0	0	0	19,802	76,696	160,509	8346,468	3988,192	19,802	160,509	76,696	3	23094,59	11056,02	70,964	567,532	271,151
Wind+ice, -5 dgr	380C1F2 / 19802		76547	160498	0	0	0	19,802	76,547	160,498	6740,916	3214,974	19,802	160,498	76,547	Wind angle: 45 dgr					
Permanent loads yg=	380C1F3 / 19802		76360	160493	0	0	0	19,802	76,36	160,493	5135,776	2443,52	19,802	160,493	76,36						
Wind angle: 45 dgr	GW / opgw	3796	13832	28363	0	0	0	3,796	13,832	28,363	1458,539	714,1817	3,796	28,363	13,832						
	Comp. gl	7762	27716	57669	0	0	0	7,762	27,716	57,669	1412,891	695,1482	7,762	57,669	27,716						
4	380C1F1 / 19451		71480	151870	0	0	0	19,451	71,48	151,87	7897,24	3716,96	19,451	151,87	71,48	4	21348,58	10056,72	67,002	522,038	245,526
Construction/mainten	380C1F2 / 19451		71434	151881	0	0	0	19,451	71,434	151,881	6379,002	3000,228	19,451	151,881	71,434	Wind angle: 45 dgr					
Permanent loads yg=	380C1F3 / 19451		71375	151896	0	0	0	19,451	71,375	151,896	4860,672	2284	19,451	151,896	71,375						
Wind angle: 45 dgr	GW / opgw	2828	10251	21731	0	0	0	2,828	10,251	21,731	1117,495	529,2967	2,828	21,731	10,251						
	Comp. gl	5821	20986	44660	0	0	0	5,821	20,986	44,66	1094,17	526,2356	5,821	44,66	20,986						
1a	380C1F1 / 17049		88694	157786	0	0	0	17,049	88,694	157,786	8204,872	4612,088	17,049	157,786	88,694	1a	21714,81	12135,2	57,99	527,428	293,804
Wind, 10 dgr	380C1F2 / 17048		85924	154369	0	0	0	17,048	85,924	154,369	6483,498	3608,808	17,048	154,369	85,924	Wind angle: 90 dgr					
Permanent loads yg=	380C1F3 / 17048		82496	150248	0	0	0	17,048	82,496	150,248	4807,936	2639,872	17,048	150,248	82,496						
Wind angle: 90 dgr	GW / opgw	2227	13529	23228	0	0	0	2,227	13,529	23,228	1194,477	697,4078	2,227	23,228	13,529						
	Comp. gl	4618	23161	41797	0	0	0	4,618	23,161	41,797	1024,027	577,0269	4,618	41,797	23,161						
1b	380C1F1 / 17036		77213	155617	0	0	0	17,036	77,213	155,617	8092,084	4015,076	17,036	155,617	77,213	1b	21629,89	10711,83	57,948	527,4	260,647
Wind, -20 dgr	380C1F2 / 17036		76684	155257	0	0	0	17,036	76,684	155,257	6520,794	3220,728	17,036	155,257	76,684	Wind angle: 90 dgr					
Permanent loads yg=	380C1F3 / 17036		76032	154852	0	0	0	17,036	76,032	154,852	4955,264	2433,024	17,036	154,852	76,032						
Wind angle: 90 dgr	GW / opgw	2225	10368	20455	0	0	0	2,225	10,368	20,455	1051,878	534,855	2,225	20,455	10,368						
	Comp. gl	4615	20350	41219	0	0	0	4,615	20,35	41,219	1009,866	508,1511	4,615	41,219	20,35						
3	380C1F1 / 19805		94794	175433	0	0	0	19,805	94,794	175,433	9122,516	4929,288	19,805	175,433	94,794	3	25251,94	13675,49	70,974	618,923	334,309
Wind+ice, -5 dgr	380C1F2 / 19805		92704	173118	0	0	0	19,805	92,704	173,118	7270,956	3893,568	19,805	173,118	92,704	Wind angle: 90 dgr					
Permanent loads yg=	380C1F3 / 19804		90133	170380	0	0	0	19,804	90,133	170,38	5452,16	2884,256	19,804	170,38	90,133						
Wind angle: 90 dgr	GW / opgw	3797	20828	35526	0	0	0	3,797	20,828	35,526	1826,889	1073,945	3,797	35,526	20,828						
	Comp. gl	7763	35850	64466	0	0	0	7,763	35,85	64,466	1579,417	894,4332	7,763	64,466	35,85						
4	380C1F1 / 19451		76022	153058	0	0	0	19,451	76,022	153,058	7959,016	3953,144	19,451	153,058	76,022	4	21487,79	10648,84	67,002	525,207	259,632
Construction/mainten	380C1F2 / 19451		75535	152787	0	0	0	19,451	75,535	152,787	6417,054	3172,47	19,451	152,787	75,535	Wind angle: 90 dgr					
Permanent loads yg=	380C1F3 / 19451		74931	152486	0	0	0	19,451	74,931	152,486	4879,552	2397,792	19,451	152,486	74,931						
Wind angle: 90 dgr	GW / opgw	2828	11112	22051	0	0	0	2,828	11,112	22,051	1133,951	573,5728	2,828	22,051	11,112						
	Comp. gl	5821	22032	44825	0	0	0	5,821	22,032	44,825	1098,213	551,8626	5,821	44,825	22,032						
1a	380C1F1 / 17049		91433	161228	0	0	0	17,049	91,433	161,228	8383,856	4754,516	17,049	161,228	91,433	1a	22159,01	12492,29	57,991	537,957	302,306
Wind, 10 dgr	380C1F2 / 17049		88385	157402	0	0	0	17,049	88,385	157,402	6610,884	3712,17	17,049	157,402	88,385	Wind angle: -45 dgr					
Permanent loads yg=	380C1F3 / 17048		84603	152765	0	0	0	17,048	84,603	152,765	4888,48	2707,296	17,048	152,765	84,603						
Wind angle: -45 dgr	GW / opgw	2227	14071	23957	0	0	0	2,227	14,071	23,957	1231,965	725,2796	2,227	23,957	14,071						
	Comp. gl	4618	23814	42605	0	0	0	4,618	23,814	42,605	1043,823	593,0254	4,618	42,605	23,814						
1b	380C1F1 / 17036		77740	155999	0	0	0	17,036	77,74	155,999	8111,948	4042,48	17,036	155,999	77,74	1b	21678,24	10780,48	57,948	528,53	262,278
Wind, -20 dgr	380C1F2 / 17036		77154	155575	0	0	0	17,036	77,154	155,575	6534,15	3240,468	17,036	155,575	77,154	Wind angle: -45 dgr					
Permanent loads yg=	380C1F3 / 17036		76433	155096	0	0	0	17,036	76,433	155,096	4963,072	2445,856	17,036	155,096	76,433						
Wind angle: -45 dgr	GW / opgw	2225	10478	20558	0	0	0	2,225	10,478	20,558	1057,175	540,5117	2,225	20,558	10,478						
	Comp. gl	4615	20473	41302	0	0	0	4,615	20,473	41,302	1011,899	511,1646	4,615	41,302	20,473						
3	380C1F1 / 19806		96873	177802	0	0	0	19,806	96,873	177,802	9245,704	5037,396	19,806	177,802	96,873	3	25589,39	13974,03	70,978	627,012	341,51
Wind+ice, -5 dgr	380C1F2 / 19805		94560	175171	0	0	0	19,805	94,56	175,171	7357,182	3971,52	19,805	175,171	94,56	Wind angle: -45 dgr					
Permanent loads yg=	380C1F3 / 19805		91711	172045	0	0	0	19,805	91,711	172,045	5505,44	2934,752	19,805	172,045	91,711						
Wind angle: -45 dgr	GW / opgw	3798	21594	36481	0	0	0	3,798	21,594	36,481	1875,999	1113,336	3,798	36,481	21,594						
	Comp. gl	7764	36772	65513	0	0	0	7,764	36,772	65,513	1605,069	917,0243	7,764	65,513	36,772						
4	380C1F1 / 19451		76507	153348	0	0	0	19,451	76,507	153,348	7974,096	3978,364	19,451	153,348	76,507	4	21523,43	10711,62	67,002	526,036	261,124
Construction/mainten	380C1F2 / 19451		75968	153026	0	0	0	19,451	75,968	153,026	6427,092	3190,656	19,451	153,026	75,968	Wind angle: -45 dgr					
Permanent loads yg=	380C1F3 / 19451		75302	152666	0	0	0	19,451	75,302	152,666	4885,312	2409,664	19,451	152,666	75,302						
Wind angle: -45 dgr	GW / opgw	2828	11206	22119	0	0	0	2,828	11,206	22,119	1137,447	578,4066	2,828	22,119	11,206						
	Comp. gl	5821	22141	44877	0	0	0	5,821	22,141	44,877	1099,487	554,5331	5,821	44,877	22,141						
1a	380C1F1 / 12781		53222	107088	0	0	0	12,781	53,222	107,088	5568,576	2767,544	12,781	107,088	53,222	1a	14901,94	7391,629	43,474	363,539	179,923
Wind, 10 dgr	380C1F2 / 12781		52851	106842	0	0	0	12,781	52,851	106,842	4487,364	2219,742	12,781	106,842	52,851	Wind angle: 0 dgr					
Permanent loads yg=(	380C1F3 / 12781		52394	106564	0	0	0	12,781	52,394	106,564	3410,048	1676,608	12,781	106,564	52,394						
Wind angle: 0 dgr	GW / opgw	1669	7191	14164	0	0	0	1,669	7,191	14,164	728,3695	371,0584	1,669	14,164	7,191						
	Comp. gl	3462	14265	28881	0	0	0	3,462	14,265	28,881	707,5845	356,6762	3,462	28,881	14,265						
1b	380C1F1 / 12774		58997	124352	0	0	0	12,774	58,997	124,352	6466,304	3067,844	12,774	124,352	58,997	1b	17287,94	8203,458	43,451	421,658	199,82
Wind, -20 dgr	380C1F2 / 12774		58915	124346	0	0	0	12,774	58,915	124,346	5222,532	2474,43	12,774	124,346	58,915	Wind angle: 0 dgr					
Permanent loads yg=(	380C1F3 / 12774		58813	124344	0	0	0	12,774	58,813	124,344	3979,008	1882,016	12,774	124,344	58,813						
Wind angle: 0 dgr	GW / opgw	1668	7610	15934	0	0	0	1,668	7,61	15,934	819,39	392,6043	1,668	15,934	7,61						
	Comp. gl	3461	15485	32682	0	0	0	3,461	15,485	32,682	800,709	386,5641	3,461	32,682	15,485						
3	380C1F1	15538	65149	133659	0	0	0	15,538	65,149	133,659	6950,268	3387,748	15,538	133,659	65,149	3	19385,52	9464,665	56,459	477,109	232,412
Wind+ice, -5 dgr	380C1F2	15538	64872	133536	0	0	0	15,538	64,872	133,536	5608,512	2724,624	15,538	133,536	64,872	Wind angle: 0 dgr					
Permanent loads yg	380C1F3	15538	64529	133402	0	0	0	15,538	64,529	133,402	4268,864	2064,928	15,538	133,402	64,529						
Wind angle: 0 dgr	GW / opgw	3239	12761	25380	0	0	0	3,239	12,761	25,38	1305,141	658,6833	3,239	25,38	12,761						
	Comp. gl	6606	25101	51132	0	0	0	6,606	25,101	51,132	1252,734	628,682	6,606	51,132	25,101						
4	380C1F1	15186	59156	124693	0	0	0	15,186	59,156	124,693	6484,036	3076,112	15,186	124,693	59,156	4	17562,01	8334,333	52,494	429,625	203,538
Construction/mainte	380C1F2	15186	59079	124696	0	0	0	15,186	59,079	124,696	5237,232	2481,318	15,186	124,696	59,079	Wind angle: 0 dgr					
Permanent loads yg	380C1F3	15186	58981	124702	0	0	0	15,186	58,981	124,702	3990,464	1887,392	15,186	124,702	58,981						

Wind angle: 0 dgr	GW / opgv	2271	8662	18188	0	0	0	2,271	8,662	18,188	935,2997	447,1606	2,271	18,188	8,662												
	Comp. gl	4665	17660	37346	0	0	0	4,665	17,66	37,346	914,977	442,3499	4,665	37,346	17,66												
6	380C1F1	12781	49433	106010	0	0	0	12,781	49,433	106,01	5512,52	2570,516	12,781	106,01	49,433		6	14769,9	6895,724	43,474	360,509	168,107					
Permanent, +10 dgr	380C1F2	12781	49433	106010	0	0	0	12,781	49,433	106,01	4452,42	2076,186	12,781	106,01	49,433		0										
Permanent loads yg	380C1F3	12781	49433	106010	0	0	0	12,781	49,433	106,01	3392,32	1581,856	12,781	106,01	49,433												
	GW / opgv	1669	6441	13813	0	0	0	1,669	6,441	13,813	710,3197	332,4904	1,669	13,813	6,441												
	Comp. gl	3462	13367	28666	0	0	0	3,462	13,367	28,666	702,317	334,6752	3,462	28,666	13,367												
1a	380C1F1	12781	51673	106197	0	0	0	12,781	51,673	106,197	5522,244	2686,996	12,781	106,197	51,673		1a	14790,08	7189,665	43,474	360,934	175,12					
Wind, 10 dgr	380C1F2	12781	51465	106111	0	0	0	12,781	51,465	106,111	4456,662	2161,53	12,781	106,111	51,465		Wind angle: 45 dgr										
Permanent loads yg	380C1F3	12781	51207	106018	0	0	0	12,781	51,207	106,018	3392,576	1638,624	12,781	106,018	51,207												
Wind angle: 45 dgr	GW / opgv	1669	6874	13917	0	0	0	1,669	6,874	13,917	715,6678	354,757	1,669	13,917	6,874												
	Comp. gl	3462	13901	28691	0	0	0	3,462	13,901	28,691	702,9295	347,7582	3,462	28,691	13,901												
1b	380C1F1	12774	58647	124349	0	0	0	12,774	58,647	124,349	6466,148	3049,644	12,774	124,349	58,647		1b	17288,2	8157,527	43,451	421,672	198,724					
Wind, -20 dgr	380C1F2	12774	58597	124354	0	0	0	12,774	58,597	124,354	5222,868	2461,074	12,774	124,354	58,597		Wind angle: 45 dgr										
Permanent loads yg	380C1F3	12774	58535	124361	0	0	0	12,774	58,535	124,361	3979,552	1871,12	12,774	124,361	58,535												
Wind angle: 45 dgr	GW / opgv	1668	7543	15924	0	0	0	1,668	7,543	15,924	818,8758	389,1589	1,668	15,924	7,543												
	Comp. gl	3461	15402	32684	0	0	0	3,461	15,402	32,684	800,758	384,5306	3,461	32,684	15,402												
3	380C1F1	15538	63979	133237	0	0	0	15,538	63,979	133,237	6928,324	3326,908	15,538	133,237	63,979		3	19325,67	9295,744	56,458	475,714	228,336					
Wind+ioe, -5 dgr	380C1F2	15538	63819	133203	0	0	0	15,538	63,819	133,203	5594,526	2680,398	15,538	133,203	63,819		Wind angle: 45 dgr										
Permanent loads yg	380C1F3	15538	63619	133169	0	0	0	15,538	63,619	133,169	4261,408	2035,808	15,538	133,169	63,619												
Wind angle: 45 dgr	GW / opgv	3238	12329	25139	0	0	0	3,238	12,329	25,139	1292,748	636,4674	3,238	25,139	12,329												
	Comp. gl	6606	24590	50966	0	0	0	6,606	24,59	50,966	1248,667	616,1625	6,606	50,966	24,59												
4	380C1F1	15186	58821	124722	0	0	0	15,186	58,821	124,722	6485,544	3058,692	15,186	124,722	58,821		4	17566,62	8290,361	52,494	429,742	202,488					
Construction/mainte	380C1F2	15186	58773	124730	0	0	0	15,186	58,773	124,73	5238,66	2468,466	15,186	124,73	58,773		Wind angle: 45 dgr										
Permanent loads yg	380C1F3	15186	58713	124742	0	0	0	15,186	58,713	124,742	3991,744	1878,816	15,186	124,742	58,713												
Wind angle: 45 dgr	GW / opgv	2271	8600	18190	0	0	0	2,271	8,6	18,19	935,4026	443,9724	2,271	18,19	8,6												
	Comp. gl	4665	17581	37358	0	0	0	4,665	17,581	37,358	915,271	440,4144	4,665	37,358	17,581												
1a	380C1F1	12785	79869	138866	0	0	0	12,785	79,869	138,866	7221,032	4153,188	12,785	138,866	79,869		1a	18985,21	10859,23	43,486	460,087	262,395					
Wind, 10 dgr	380C1F2	12784	76688	134567	0	0	0	12,784	76,688	134,567	5651,814	3220,896	12,784	134,567	76,688		Wind angle: 90 dgr										
Permanent loads yg	380C1F3	12784	72715	129277	0	0	0	12,784	72,715	129,277	4136,864	2326,88	12,784	129,277	72,715												
Wind angle: 90 dgr	GW / opgv	1670	12565	21162	0	0	0	1,67	12,565	21,162	1088,235	647,4118	1,67	21,162	12,565												
	Comp. gl	3463	20558	36215	0	0	0	3,463	20,558	36,215	887,2675	510,8567	3,463	36,215	20,558												
1b	380C1F1	12774	64146	127595	0	0	0	12,774	64,146	127,595	6634,94	3335,592	12,774	127,595	64,146		1b	17696,61	8874,791	43,451	431,191	215,781					
Wind, -20 dgr	380C1F2	12774	63519	127026	0	0	0	12,774	63,519	127,026	5335,092	2667,798	12,774	127,026	63,519		Wind angle: 90 dgr										
Permanent loads yg	380C1F3	12774	62750	126371	0	0	0	12,774	62,75	126,371	4043,872	2008	12,774	126,371	62,75												
Wind angle: 90 dgr	GW / opgv	1668	8672	16819	0	0	0	1,668	8,672	16,819	864,9003	447,2166	1,668	16,819	8,672												
	Comp. gl	3461	16694	33380	0	0	0	3,461	16,694	33,38	817,81	416,1846	3,461	33,38	16,694												
3	380C1F1	15541	84746	153890	0	0	0	15,541	84,746	153,89	8002,28	4406,792	15,541	153,89	84,746		3	22234,67	12265,38	56,471	545,03	299,844					
Wind+ioe, -5 dgr	380C1F2	15541	82341	150899	0	0	0	15,541	82,341	150,899	6337,758	3458,322	15,541	150,899	82,341		Wind angle: 90 dgr										
Permanent loads yg	380C1F3	15541	79370	147304	0	0	0	15,541	79,37	147,304	4713,728	2539,84	15,541	147,304	79,37												
Wind angle: 90 dgr	GW / opgv	3240	19918	33574	0	0	0	3,24	19,918	33,574	1726,509	1026,726	3,24	33,574	19,918												
	Comp. gl	6608	33469	59363	0	0	0	6,608	33,469	59,363	1454,394	833,7021	6,608	59,363	33,469												
4	380C1F1	15187	63819	126890	0	0	0	15,187	63,819	126,89	6598,28	3318,588	15,187	126,89	63,819		4	17827,18	8938,963	52,495	435,758	217,919					
Construction/mainte	380C1F2	15186	63265	126476	0	0	0	15,186	63,265	126,476	5311,992	2657,13	15,186	126,476	63,265		Wind angle: 90 dgr										
Permanent loads yg	380C1F3	15186	62582	126005	0	0	0	15,186	62,582	126,005	4032,16	2002,624	15,186	126,005	62,582												
Wind angle: 90 dgr	GW / opgv	2271	9546	18692	0	0	0	2,271	9,546	18,692	961,2174	492,6195	2,271	18,692	9,546												
	Comp. gl	4665	18707	37695	0	0	0	4,665	18,707	37,695	923,5275	468,0014	4,665	37,695	18,707												
1a	380C1F1	12785	82990	143126	0	0	0	12,785	82,99	143,126	7442,552	4315,48	12,785	143,126	82,99		1a	19539,44	11267,69	43,487	473,277	272,139					
Wind, 10 dgr	380C1F2	12785	79515	138386	0	0	0	12,785	79,515	138,386	5812,212	3339,63	12,785	138,386	79,515		Wind angle: -45 dgr										
Permanent loads yg	380C1F3	12784	75162	132522	0	0	0	12,784	75,162	132,522	4240,704	2405,184	12,784	132,522	75,162												
Wind angle: -45 dgr	GW / opgv	1670	13162	22007	0	0	0	1,67	13,162	22,007	1131,688	678,1119	1,67	22,007	13,162												
	Comp. gl	3463	21310	37236	0	0	0	3,463	21,31	37,236	912,282	529,2807	3,463	37,236	21,31												
1b	380C1F1	12774	64772	128192	0	0	0	12,774	64,772	128,192	6665,984	3368,144	12,774	128,192	64,772		1b	17772,41	8956,132	43,451	432,969	217,712					
Wind, -20 dgr	380C1F2	12774	64075	127530	0	0	0	12,774	64,075	127,53	5356,26	2691,15	12,774	127,53	64,075		Wind angle: -45 dgr										
Permanent loads yg	380C1F3	12774	63221	126766	0	0	0	12,774	63,221	126,766	4056,512	2023,072	12,774	126,766	63,221												
Wind angle: -45 dgr	GW / opgv	1668	8804	16969	0	0	0	1,668	8,804	16,969	872,6139	454,0046	1,668	16,969	8,804												
	Comp. gl	3461	16840	33512	0	0	0	3,461	16,84	33,512	821,044	419,7616	3,461	33,512	16,84												
3	380C1F1	15542	87128	156909	0	0	0	15,542	87,128	156,909	8159,268	4530,656	15,542	156,909	87,128		3	22657,58	12603,71	56,472	555,174	308,003					
Wind+ioe, -5 dgr	380C1F2	15541	84477	153553	0	0	0	15,541	84,477	153,553	6449,226	3548,034	15,541	153,553	84,477		Wind angle: -45 dgr										
Permanent loads yg	380C1F3	15541	81195	149498	0	0	0	15,541	81,195	149,498	4783,936	2598,24	15,541	149,498	81,195												
Wind angle: -45 dgr	GW / opgv	3240	20730	34631	0	0	0	3,24	20,73	34,631	1780,865	1068,482	3,24	34,631	20,73												
	Comp. gl	6608	34473	60583	0	0	0	6,608	34,473	60,583	1484,284	858,3001	6,608	60,583	34,473												
4	380C1F1	15187	64373	127328	0	0	0	15,187	64,373	127,328	6621,056	3347,396	15,187	127,328	64,373		4	17881,16	9010,258	52,496	437,018	219,611					
Construction/mainte	380C1F2	15187	63757	126842	0	0	0	15,187	63,757	126,842	5327,364	2677,794	15,187	126,842	63,757		Wind angle: -45 dgr										
Permanent loads yg	380C1F3	15186	63001	126289	0	0	0	15,186	63,001	126,289	4041,248	2016,032	15,186	126,289	63,001												
Wind angle: -45 dgr	GW / opgv	2271	9652	18786	0	0	0	2,271	9,652	18,786	966,0513	498,0704	2,271	18,786	9,652												
	Comp. gl	4665	18828	37773	0	0	0	4,665	18,828	37,773	925,4385	470,9659	4,665	37,773	18,828												

W2H400+5 08 - N2

Hoogte mast		52 m			
Hoogte onderste stroomdraad (F3)		26 m			
		Hoogte		Excentriciteit ophanging t.o.v. hart mast	
Bliksemdraad = GW / CH_{mast} -	0,576 m =	51,424 m		0,76 m	
1e traverse - 380C1F1 F2 +	10 m =	52 m		0 m	
2e traverse - 380C1F2 F3 +	10 m =	42 m		0 m	
3e traverse - 380C1F3		32 m		0 m	
Passieve lijn = Comp C. F3 -	7,5 m =	24,5 m		2,075 m	

	Uit mast			Uit lijnen					
	ULS (incl bel factoren)			SLS					
	N	V	M	Nmin	Nmax	Vmax	Mlangs;ma	Mdwars;max	
	[kN]	[kN]	[kNm]	[kN]	[kN]	[kN]	[kNm]	[kNm]	
Sheet 08 - N	793	122	3544	97	174	713	6438	28917	

-173- 74100706-ETD/POL 12-00138 REV 003

W2H400+ TOWER **APPENDI N2**

Loadcases for tower defliction analyses (Serviceability limit state)

Loadcase according to 50341-3-15

	Attachmer	AHEAD [N]	[N]	[N]	BACK [N]	[N]	Totaal Vert [kN]	Dwars [kN]	Langs [kN]
1a	380C1F1 / 14202	58927	117336	14202	58927	-117336	28,404	117,854	0
Wind, 10 dgr	380C1F2 / 14202	58429	116970	14202	58429	-116970	28,404	116,858	0
Permanent loads yg=	380C1F3 / 14202	57816	116556	14202	57816	-116556	28,404	115,632	0
Wind angle: 0 dgr	GW / opgv	1855	8041	15633	1855	8041	-15633	3,71	16,082	0
	Comp. gl	3847	15792	31671	3847	15792	-31671	7,694	31,584	0
1b	380C1F1 / 14194	63543	134464	14194	63543	-134464	28,388	127,086	0
Wind, -20 dgr	380C1F2 / 14194	63480	134467	14194	63480	-134467	28,388	126,96	0
Permanent loads yg=	380C1F3 / 14194	63399	134474	14194	63399	-134474	28,388	126,798	0
Wind angle: 0 dgr	GW / opgv	1854	8213	17290	1854	8213	-17290	3,708	16,426	0
	Comp. gl	3845	16749	35479	3845	16749	-35479	7,69	33,498	0
3	380C1F1 / 22419	84618	176416	22419	84618	-176416	44,838	169,236	0
Wind+ice, -5 dgr	380C1F2 / 22419	84425	176396	22419	84425	-176396	44,838	168,85	0
Permanent loads yg=	380C1F3 / 22419	84184	176381	22419	84184	-176381	44,838	168,368	0
Wind angle: 0 dgr	GW / opgv	6530	20638	42602	6530	20638	-42602	13,06	41,276	0
	Comp. gl	13213	41150	85996	13213	41150	-85996	26,426	82,3	0
4	380C1F1 / 16206	62101	131369	16206	62101	-131369	32,412	124,202	0
Construction/mainter	380C1F2 / 16206	62039	131376	16206	62039	-131376	32,412	124,078	0
Permanent loads yg=	380C1F3 / 16206	61960	131388	16206	61960	-131388	32,412	123,92	0
Wind angle: 0 dgr	GW / opgv	2356	8891	18744	2356	8891	-18744	4,712	17,782	0
	Comp. gl	4850	18179	38547	4850	18179	-38547	9,7	36,358	0
1a	380C1F1 / 14202	56851	116000	14208	98189	-165882	28,41	155,04	-49,882
Wind, 10 dgr	380C1F2 / 14202	56574	115867	14208	93717	-159769	28,41	150,291	-43,902
Permanent loads yg=	380C1F3 / 14202	56231	115721	14207	88077	-152129	28,409	144,308	-36,408
Wind angle: 45 dgr	GW / opgv	1855	7613	15270	1856	15816	-25944	3,711	23,429	-10,674
	Comp. gl	3847	15304	31383	3849	25141	-43062	7,696	40,445	-11,679
1b	380C1F1 / 14194	63266	134493	14195	67811	-136493	28,389	131,077	-2
Wind, -20 dgr	380C1F2 / 14194	63227	134500	14195	67309	-136112	28,389	130,536	-1,612
Permanent loads yg=	380C1F3 / 14194	63177	134510	14195	66693	-135679	28,389	129,87	-1,169
Wind angle: 45 dgr	GW / opgv	1854	8160	17289	1854	9080	-17879	3,708	17,24	-0,59
	Comp. gl	3845	16682	35488	3846	17755	-35908	7,691	34,437	-0,42
3	380C1F1 / 22419	83790	176382	22421	98433	-186136	44,84	182,223	-9,754
Wind+ice, -5 dgr	380C1F2 / 22419	83673	176389	22421	96774	-184519	44,84	180,447	-8,13
Permanent loads yg=	380C1F3 / 22419	83526	176403	22420	94735	-182634	44,839	178,261	-6,231
Wind angle: 45 dgr	GW / opgv	6530	20371	42601	6531	24969	-45353	13,061	45,34	-2,752
	Comp. gl	13213	40808	86040	13214	46287	-88135	26,427	87,095	-2,095
4	380C1F1 / 16206	61831	131414	16207	66084	-132786	32,413	127,915	-1,372
Construction/mainter	380C1F2 / 16206	61792	131422	16207	65626	-132496	32,413	127,418	-1,074
Permanent loads yg=	380C1F3 / 16206	61743	131435	16207	65059	-132172	32,413	126,802	-0,737
Wind angle: 45 dgr	GW / opgv	2356	8841	18749	2356	9651	-19102	4,712	18,492	-0,353
	Comp. gl	4850	18115	38561	4850	19090	-38769	9,7	37,205	-0,208
1a	380C1F1 / 14208	94173	160390	14208	94173	-160390	28,416	188,346	0
Wind, 10 dgr	380C1F2 / 14207	90060	154804	14207	90060	-154804	28,414	180,12	0
Permanent loads yg=	380C1F3 / 14206	84889	147858	14206	84889	-147858	28,412	169,778	0
Wind angle: 90 dgr	GW / opgv	1856	15062	24884	1856	15062	-24884	3,712	30,124	0
	Comp. gl	3848	24165	41727	3848	24165	-41727	7,696	48,33	0
1b	380C1F1 / 14195	67360	136149	14195	67360	-136149	28,39	134,72	0
Wind, -20 dgr	380C1F2 / 14195	66908	135825	14195	66908	-135825	28,39	133,816	0
Permanent loads yg=	380C1F3 / 14195	66351	135458	14195	66351	-135458	28,39	132,702	0
Wind angle: 90 dgr	GW / opgv	1854	8986	17788	1854	8986	-17788	3,708	17,972	0
	Comp. gl	3846	17650	35833	3846	17650	-35833	7,692	35,3	0
3	380C1F1 / 22421	96941	184679	22421	96941	-184679	44,842	193,882	0
Wind+ice, -5 dgr	380C1F2 / 22420	95445	183276	22420	95445	-183276	44,84	190,89	0
Permanent loads yg=	380C1F3 / 22420	93607	181648	22420	93607	-181648	44,84	187,214	0
Wind angle: 90 dgr	GW / opgv	6531	24509	44940	6531	24509	-44940	13,062	49,018	0
	Comp. gl	13214	45753	87767	13214	45753	-87767	26,428	91,506	0
4	380C1F1 / 16207	65672	132524	16207	65672	-132524	32,414	131,344	0
Construction/mainter	380C1F2 / 16207	65257	132281	16207	65257	-132281	32,414	130,514	0
Permanent loads yg=	380C1F3 / 16206	64744	132009	16206	64744	-132009	32,412	129,488	0
Wind angle: 90 dgr	GW / opgv	2356	9570	19041	2356	9570	-19041	4,712	19,14	0
	Comp. gl	4850	18997	38722	4850	18997	-38722	9,7	37,994	0
1a	380C1F1 / 14208	98189	165882	14202	56851	-116000	28,41	155,04	49,882
Wind, 10 dgr	380C1F2 / 14208	93717	159769	14202	56574	-115867	28,41	150,291	43,902
Permanent loads yg=	380C1F3 / 14207	88077	152129	14202	56231	-115721	28,409	144,308	36,408
Wind angle: -45 dgr	GW / opgv	1856	15816	25944	1855	7613	-15270	3,711	23,429	10,674
	Comp. gl	3849	25141	43062	3847	15304	-31383	7,696	40,445	11,679
1b	380C1F1 / 14195	67811	136493	14194	63266	-134493	28,389	131,077	2
Wind, -20 dgr	380C1F2 / 14195	67309	136112	14194	63227	-134500	28,389	130,536	1,612
Permanent loads yg=	380C1F3 / 14195	66693	135679	14194	63177	-134510	28,389	129,87	1,169
Wind angle: -45 dgr	GW / opgv	1854	9080	17879	1854	8160	-17289	3,708	17,24	0,59
	Comp. gl	3846	17755	35908	3845	16682	-35488	7,691	34,437	0,42
3	380C1F1 / 22421	98433	186136	22419	83790	-176382	44,84	182,223	9,754
Wind+ice, -5 dgr	380C1F2 / 22421	96774	184519	22419	83673	-176389	44,84	180,447	8,13
Permanent loads yg=	380C1F3 / 22420	94735	182634	22419	83526	-176403	44,839	178,261	6,231
Wind angle: -45 dgr	GW / opgv	6531	24969	45353	6530	20371	-42601	13,061	45,34	2,752
	Comp. gl	13214	46287	88135	13213	40808	-86040	26,427	87,095	2,095
4	380C1F1 / 16207	66084	132786	16206	61831	-131414	32,413	127,915	1,372
Construction/mainter	380C1F2 / 16207	65626	132496	16206	61792	-131422	32,413	127,418	1,074
Permanent loads yg=	380C1F3 / 16207	65059	132172	16206	61743	-131435	32,413	126,802	0,737
Wind angle: -45 dgr	GW / opgv	2356	9651	19102	2356	8841	-18749	4,712	18,492	0,353
	Comp. gl	4850	19090	38769	4850	18115	-38561	9,7	37,205	0,208

		Belastingen uit lijnen M_{langs}	M_{dwars}	N	V_{langs}	V_{dwars}	Belasting uit mast N	V	M
SLS	0 deg 1a	0	**16356**	97	0	**398**	661	81	2363
	1b	0	17682	**97**	0	431	661	81	2363
	3	0	25483	174	0	630	661	81	2363
	4	0	17464	112	0	426	661	81	2363
	1a	**-6438**	21207	97	**-153**	514	661	81	2363
	45 deg 1b	-250	18203	97	-6	443	661	81	2363
	3	-1241	27289	174	-29	673	661	81	2363
	4	-163	17947	112	-4	438	661	81	2363
	1a	0	25544	97	0	617	661	81	2363
	90 deg 1b	0	18680	97	0	455	661	81	2363
	3	0	**28917**	**174**	0	**713**	661	81	2363
	4	0	18394	112	0	448	661	81	2363
	1a	**6438**	21207	97	**153**	514	661	81	2363
	-45 deg 1b	250	18203	97	6	443	661	81	2363
	3	1241	27289	174	29	673	661	81	2363
	4	163	17947	112	4	438	661	81	2363

regel		Loadcase	Totaal M_{langs}	M_{dwars}	N	V_{langs}	V_{dwars}	Totaal moment	M langs max	M dwars ma	N max	V langs max	V dwars ma	M tot max	N min
1	Perm load 1,2 0 deg	1a	2363	18719	757	81	479	18867,44	1						
2	Perm load 1,2 0 deg	1b	2363	20045	757	81	512	20183,92	2						x
3	Perm load 1,2 0 deg	3	2363	27846	835	81	711	27946,15	3						
4	Perm load 1,2 0 deg	4	2363	19827	772	81	508	19967,07	4						
5									5						
6	Perm load 1,2 45 deg	1a	8801	23569	757	234	595	25158,74	6 x			x			
7	Perm load 1,2 45 deg	1b	2612	20566	757	87	524	20731,31	7						
8	Perm load 1,2 45 deg	3	3604	29652	835	110	755	29869,71	8						
9	Perm load 1,2 45 deg	4	2526	20310	772	85	519	20466,11	9						
10									10						
11	Perm load 1,2 90 deg	1a	2363	27907	757	81	698	28006,4	11						
12	Perm load 1,2 90 deg	1b	2363	21043	757	81	536	21174,89	12						
13	Perm load 1,2 90 deg	3	2363	31280	835	81	794	31369,22	13	x	x		x	x	
14	Perm load 1,2 90 deg	4 Construct	2363	20757	772	81	530	20890,61	14						
15									15						
16	Perm load 1,2 -45 deg	1a	8108	23569	757	234	595	24925,11	16			x			
17	Perm load 1,2 -45 deg	1b	1920	20566	757	87	524	20655,52	17						
18	Perm load 1,2 -45 deg	3	2912	29652	835	110	755	29794,15	18						
19	Perm load 1,2 -45 deg	4	1834	20310	772	85	519	20392,26	19						
			8801	31280	835	234	794	31369							
					757										

samenvatting

	Mast	Bijlage	Wind	Loadcase	M_{langs}	M_{dwars}	N	V_{langs}	V_{dwars}
2	W2H400+5	08-N2	Perm load :0 deg	1b	2363	20045	757	81	512
6	W2H400+5	08-N2	Perm load :45 deg	1a	8801	23569	757	234	595
13	W2H400+5	08-N2	Perm load :90 deg	3	2363	31280	835	81	794
16	W2H400+5	08-N2	Perm load :-45 deg	1a	8108	23569	757	234	595
	W2H400+5	08-N2	#N/B #N/B	#N/B	#N/B	#N/B	#N/B	#N/B	#N/B
	W2H400+5	08-N2	#N/B #N/B	#N/B	#N/B	#N/B	#N/B	#N/B	#N/B

		Belastingen op mastvoet, per lijn M_{langs}	M_{dwars}	N	V_{langs}	V_{dwars}	Belasting op mastvoet, belastinggeval M_{langs}	M_{dwars}	N	V_{langs}	V_{dwars}
		0	6128,408	28,404	0	117,854	1a 0	16356,26	96,616	0	398,01
		0	4908,036	28,404	0	116,858	Wind angle: 0 dgr				
		0	3700,224	28,404	0	115,632					
		0	829,8204	3,71	0	16,082					
		0	789,7731	7,694	0	31,584					
		0	6608,472	28,388	0	127,086					
		0	5332,32	28,388	0	126,96	1b 0	17682,49	96,562	0	430,768
		0	4057,536	28,388	0	126,798	Wind angle: 0 dgr				
		0	847,5087	3,708	0	16,426					
		0	836,6578	7,69	0	33,498					
		0	8800,272	44,838	0	169,236	3 0	25483,43	174	0	630,03
		0	7091,7	44,838	0	168,85	Wind angle: 0 dgr				
		0	5387,776	44,838	0	168,368					
		0	2132,503	13,06	0	41,276					
		0	2071,184	26,426	0	82,3					
		0	6458,504	32,412	0	124,202	4 0	17464,12	111,648	0	426,34
		0	5211,276	32,412	0	124,078	Wind angle: 0 dgr				
		0	3965,44	32,412	0	123,92					
		0	918,0027	4,712	0	17,782					
		0	910,8985	9,7	0	36,358					
		-2593,86	8062,08	28,41	-49,882	155,04	1a -6437,84	21206,66	96,636	-152,545	513,513
		-1843,88	6312,222	28,41	-43,902	150,291	Wind angle: 45 dgr				
		-1165,06	4617,856	28,409	-36,408	144,308					
		-548,9	1207,633	3,711	-10,674	23,429					
		-286,136	1006,872	7,696	-11,679	40,445					
		-104	6816,004	28,389	-2	131,077					
		-67,704	5482,512	28,389	-1,612	130,536	1b -249,742	18203,39	96,566	-5,791	443,16
		-37,408	4155,84	28,389	-1,169	129,87	Wind angle: 45 dgr				
		-30,3402	889,3678	3,708	-0,59	17,24					
		-10,29	859,6653	7,691	-0,42	34,437					
		-507,208	9475,596	44,84	-9,754	182,223	3 -1240,91	27288,88	174,007	-28,962	673,366
		-341,46	7578,774	44,84	-8,13	180,447	Wind angle: 45 dgr				
		-199,392	5704,352	44,839	-6,231	178,261					
		-141,519	2341,491	13,061	-2,752	45,34					
		-51,3275	2188,664	26,427	-2,095	87,095					
		-71,344	6651,58	32,413	-1,372	127,915	4 -163,285	17946,96	111,651	-3,744	437,832
		-45,108	5351,556	32,413	-1,074	127,418	Wind angle: 45 dgr				
		-23,584	4057,664	32,413	-0,737	126,802					
		-18,1527	954,5137	4,712	-0,353	18,492					
		-5,096	931,65	9,7	-0,208	37,205					
		0	9793,992	28,416	0	188,346	1a 0	25543,9	96,65	0	616,698
		0	7565,04	28,414	0	180,12	Wind angle: 90 dgr				
		0	5432,896	28,412	0	169,778					
		0	1551,918	3,712	0	30,124					
		0	1200,054	7,696	0	48,33					
		0	7005,44	28,39	0	134,72	1b 0	18680	96,57	0	454,51
		0	5620,272	28,39	0	133,816	Wind angle: 90 dgr				
		0	4246,464	28,39	0	132,702					
		0	927,0102	3,708	0	17,972					
		0	880,8109	7,692	0	35,3					
		0	10081,86	44,842	0	193,882	3 0	28917,46	174,012	0	712,51
		0	8017,38	44,84	0	190,89	Wind angle: 90 dgr				
		0	5990,848	44,84	0	187,214					
		0	2530,629	13,062	0	49,018					
		0	2296,735	26,428	0	91,506					
		0	6829,888	32,414	0	131,344	4 0	18393,91	111,652	0	448,48
		0	5481,588	32,414	0	130,514	Wind angle: 90 dgr				
		0	4143,616	32,412	0	129,488					
		0	987,8365	4,712	0	19,14					
		0	950,9805	9,7	0	37,994					
		2593,864	8062,08	28,41	49,882	155,04	1a 6437,839	21206,66	96,636	152,545	513,513
		1843,884	6312,222	28,41	43,902	150,291	Wind angle: -45 dgr				
		1165,056	4617,856	28,409	36,408	144,308					
		548,8998	1207,633	3,711	10,674	23,429					
		286,1355	1006,872	7,696	11,679	40,445					
		104	6816,004	28,389	2	131,077	1b 249,7422	18203,39	96,566	5,791	443,16
		67,704	5482,512	28,389	1,612	130,536	Wind angle: -45 dgr				
		37,408	4155,84	28,389	1,169	129,87					
		30,34016	889,3678	3,708	0,59	17,24					
		10,29	859,6653	7,691	0,42	34,437					
		507,208	9475,596	44,84	9,754	182,223	3 1240,906	27288,88	174,007	28,962	673,366
		341,46	7578,774	44,84	8,13	180,447	Wind angle: -45 dgr				
		199,392	5704,352	44,839	6,231	178,261					
		141,5188	2341,491	13,061	2,752	45,34					
		51,3275	2188,664	26,427	2,095	87,095					
		71,344	6651,58	32,413	1,372	127,915	4 163,2847	17946,96	111,651	3,744	437,832
		45,108	5351,556	32,413	1,074	127,418	Wind angle: -45 dgr				
		23,584	4057,664	32,413	0,737	126,802					
		18,15267	954,5137	4,712	0,353	18,492					
		5,096	931,65	9,7	0,208	37,205					

W2H400A 08A-AN

			Hoogte		Excentriciteit ophanging t.o.v. hart mast	
Hoogte mast			52	m		
Hoogte onderste stroomdraad (F3)			26	m		
Bliksemdraad = GW / (H_{mast} -	0,576	m =	51,424	m	0,76	m
1e traverse - 380C1F1 F2 +	10	m =	52	m	0	m
2e traverse - 380C1F2 F3 +	10	m =	42	m	0	m
3e traverse - 380C1F3			32	m	0	m
Passieve lijn = Comp C F3 -	7,5	m =	24,5	m	2,075	m

	Uit mast (excl belastingsfactoren)			Uit lijnen (incl belastingsfactoren)				
	N	V	M	Nmin	Nmax	Vmax	Mlangs;max	Mdwars;max
	[kN]	[kN]	[kNm]	[kN]	[kN]	[kN]	[kNm]	[kNm]
Sheet 08A - NA	792	127	3678	83	232	849	13137	35361
Sheet 08 - N1				43	71	627	25589	13974
Max	792	127	3678	43	232,096	848,704	25589,39	35361,09

			Belastingen uit lijnen					Belasting uit mast		
			M_{langs}	M_{dwars}	N	V_{langs}	V_{dwars}	N	V	M
Perm load 1,2	0 deg	1a	910	19056	111	37	456	792	127	3678
		1b	1000	19832	111	41	476	792	24	690
		3	0	31674	**232**	0	784	792	36	1034
		4	1138	20231	132	46	485	792	24	690
		6	983	18718	125	40	449			
	45 deg	1a	-8847	26174	111	-187	620	792	127	3678
		1b	539	20622	111	30	494	792	24	690
		3	873	32877	213	69	789	792	36	1034
		4	837	20951	132	40	502	792	24	690
	90 deg	1a	1308	32992	111	53	783	792	127	3678
		1b	1017	21378	111	42	512	792	24	690
		3	2772	**35361**	213	113	**849**	792	36	1034
		4	1147	21648	132	47	519	792	24	690
	-45 deg	1a	11101	26549	111	279	635	792	127	3678
		1b	1483	20663	111	52	495	792	24	690
		3	4628	33074	213	155	797	792	36	1034
		4	1451	20987	132	54	504	792	24	690
Perm load 0,9	0 deg	1a	733	15765	83	30	377	594	127	3678
		1b	801	16090	**83**	33	386	594	24	690
		3	2590	27354	186	106	659	594	36	1034
		4	962	16824	105	39	404	594	24	690
		6	702	**13457**	83	29	**323**			
	45 deg	1a	**-11148**	23718	84	**-244**	560	594	127	3678
		1b	32	17015	83	15	407	594	24	690
		3	267	30110	186	53	722	594	36	1034
		4	471	17628	105	28	422	594	24	690
	90 deg	1a	1222	31469	84	50	746	594	127	3678
		1b	830	17884	83	34	428	594	24	690
		3	2658	32773	186	108	786	594	36	1034
		4	976	18394	105	40	441	594	24	690
	-45 deg	1a	**13137**	24142	84	**325**	577	594	127	3678
		1b	1604	17063	83	51	409	594	24	690
		3	4997	30313	186	162	731	594	36	1034
		4	1471	17668	105	51	424	594	24	690

regel				Totaal												
			Loadcase	M_{langs}	M_{dwars}	N	V_{langs}	V_{dwars}	Totaal moment							
1	Perm load 1,2	0 deg	1a	4588	19056	903	164	456	19600,68	1						
2	Perm load 1,2	0 deg	1b	1690	19832	903	65	476	19903,58	2						
3	Perm load 1,2	0 deg	3	1034	31674	1024	36	784	31690,98	3			x			
4	Perm load 1,2	0 deg	4	1828	20231	924	70	485	20313,41	4						
5	Perm load 1,2	0 deg	6							5						
6										6						
7	Perm load 1,2	45 deg	1a	11448	28775	903	277	710	30968,22	7						
8	Perm load 1,2	45 deg	1b	1026	21109	903	47	511	21134,13	8						
9	Perm load 1,2	45 deg	3	1604	33608	1005	94	814	33646,25	9						
10	Perm load 1,2	45 deg	4	1324	21438	924	57	519	21479,14	10						
11										11						
12	Perm load 1,2	90 deg	1a	1308	36670	903	53	910	36692,82	12		x			x	x
13	Perm load 1,2	90 deg	1b	1017	22068	903	42	536	22091,26	13						
14	Perm load 1,2	90 deg	3	2772	36396	1005	113	884	36500,96	14						
15	Perm load 1,2	90 deg	4 Construc	1147	22338	924	47	543	22366,96	15						
16										16						
17	Perm load 1,2	-45 deg	1a	13701	29150	903	369	725	32209,6	17						
18	Perm load 1,2	-45 deg	1b	1970	21151	903	69	512	21242,45	18						
19	Perm load 1,2	-45 deg	3	5359	33806	1005	181	822	34228,08	19						
20	Perm load 1,2	-45 deg	4	1938	21475	924	71	520	21562,42	20						
21										21						
22	Perm load 0,9	0 deg	1a	4411	15765	677	157	377	16370,52	22						
23	Perm load 0,9	0 deg	1b	1490	16090	677	57	386	16158,47	23						
24	Perm load 0,9	0 deg	3	3625	27354	780	141	659	27593,41	24						
25	Perm load 0,9	0 deg	4	1652	16824	699	63	404	16905,39	25						
26	Perm load 0,9	0 deg	6							26						
27										27						
28	Perm load 0,9	45 deg	1a	13748	26319	678	334	650	29693,37	28						
29	Perm load 0,9	45 deg	1b	519	17502	677	32	424	17510,2	29						
30	Perm load 0,9	45 deg	3	999	30842	780	78	748	30858,06	30						
31	Perm load 0,9	45 deg	4 Construc	959	18116	699	45	439	18140,88	31						
32										32						
33	Perm load 0,9	90 deg	1a	1222	35147	678	50	873	35167,95	33						
34	Perm load 0,9	90 deg	1b	830	18574	677	34	452	18592,47	34						
35	Perm load 0,9	90 deg	3	2658	33807	780	108	822	33911,53	35						
36	Perm load 0,9	90 deg	4	976	19083	699	40	464	19108,15	36						
37										37						
38	Perm load 0,9	-45 deg	1a	15738	26743	678	415	667	31030,13	38	x			x		
39	Perm load 0,9	-45 deg	1b	2091	17551	677	68	426	17674,71	39						
40	Perm load 0,9	-45 deg	3	5728	31045	780	187	756	31568,86	40						
41	Perm load 0,9	-45 deg	4	1959	18155	699	68	441	18260,76	41						
			Max	15738	36670	1024	415	910	36693							

samenvatting

	Mast	Bijlage		Wind	Loadcase	M_{langs}	M_{dwars}	N	V_{langs}	V_{dwars}
3	W2H400A+	08A-AN	Perm load	0 deg	3	1034	31674	1024	36	784
12	W2H400A+	08A-AN	Perm load	90 deg	1a	1308	36670	903	53	910
38	W2H400A+	08A-AN	Perm load	-45 deg	1a	15738	26743	678	415	667

W2H400A+5 TOWER (revision date 23- APPENDIX: AN

Loadcases for tower strength (ultimate limit state)

Loadcase according to 50341-3-15

			AHEAD			BACK		Totaal Vert	Dwars	Langs	Belastingen op mastvoet, per lijn M_{langs}	M_{dwars}	N	V_{langs}	V_{dwars}
	Attachment poin	[N]	[N]	[N]	[N]	[N]	[N]	[kN]	[kN]	[kN]					
1a	380C1F1 / 380	17046	70458	137544	17046	70458	-137544	34,092	140,916	0	0	7327,632	34,092	0	140,916
Wind, 10 dgr	380C1F2 / 380	17046	69655	136876	17046	69655	-136876	34,092	139,31	0	0	5851,02	34,092	0	139,31
Permanent loads γg= 1.2	380C1F3 / 380	17045	68668	136110	17045	68668	-136110	34,09	137,336	0	0	4394,752	34,09	0	137,336
Wind angle: 0 dgr	GW / opgw	2226	9796	18590	2226	9796	-18590	4,452	19,592	0	0	1010,883	4,452	0	19,592
	Comp. gl	4617	18864	37163				4,617	18,864	37,163	910,4935	471,7483	4,617	37,163	18,864
1b	380C1F1 / 380	17036	72973	153782	17036	72973	-153782	34,072	145,946	0	0	7589,192	34,072	0	145,946
Wind, -20 dgr	380C1F2 / 380	17036	72875	153781	17036	72875	-153781	34,072	145,75	0	0	6121,5	34,072	0	145,75
Permanent loads γg= 1.2	380C1F3 / 380	17036	72751	153785	17036	72751	-153785	34,072	145,502	0	0	4656,064	34,072	0	145,502
Wind angle: 0 dgr	GW / opgw	2225	9509	19909	2225	9509	-19909	4,45	19,018	0	0	981,3636	4,45	0	19,018
	Comp. gl	4615	19347	40832				4,615	19,347	40,832	1000,384	483,5776	4,615	40,832	19,347
3	380C1F1 / 380	29376	104312	216126	29376	104312	-216126	58,752	208,624	0	0	10848,45	58,752	0	208,624
Wind+ice, -5 dgr	380C1F2 / 380	29376	104020	216089	29376	104020	-216089	58,752	208,04	0	0	8737,68	58,752	0	208,04
Permanent loads γg= 1.2	380C1F3 / 380	29376	103654	216058	29376	103654	-216058	58,752	207,308	0	0	6633,856	58,752	0	207,308
Wind angle: 0 dgr	GW / opgw	9244	26783	54949	9244	26783	-54949	18,488	53,566	0	0	2768,629	18,488	0	53,566
	Comp. gl	18676	53224	110761	18676	53224	-110761	37,352	106,448	0	0	2685,481	37,352	0	106,448
4	380C1F1 / 380	20053	73762	155471	20053	73762	-155471	40,106	147,524	0	0	7671,248	40,106	0	147,524
Construction/maintenance, +	380C1F2 / 380	20053	73667	155479	20053	73667	-155479	40,106	147,334	0	0	6188,028	40,106	0	147,334
Permanent loads γg= 1.2	380C1F3 / 380	20053	73547	155493	20053	73547	-155493	40,106	147,094	0	0	4707,008	40,106	0	147,094
Wind angle: 0 dgr	GW / opgw	2978	10784	22643	2978	10784	-22643	5,956	21,568	0	0	1113,639	5,956	0	21,568
	Comp. gl	6122	21974	46465				6,122	21,974	46,465	1138,393	551,0662	6,122	46,465	21,974
6	380C1F1 / 380	19177	68716	147362	19177	68716	-147362	38,354	137,432	0	0	7146,464	38,354	0	137,432
Permanent, +10 dgr	380C1F2 / 380	19177	68716	147362	19177	68716	-147362	38,354	137,432	0	0	5772,144	38,354	0	137,432
Permanent loads γg= 1.35	380C1F3 / 380	19177	68716	147362	19177	68716	-147362	38,354	137,432	0	0	4397,824	38,354	0	137,432
	GW / opgw	2505	9033	19371	2505	9033	-19371	5,01	18,066	0	0	932,8336	5,01	0	18,066
	Comp. gl	5195	18706	40116				5,195	18,706	40,116	982,842	469,0766	5,195	40,116	18,706
1a	380C1F1 / 380	17045	67119	135061	17057	130900	-213662	34,102	198,019	-78,601	-4087,25	10296,99	34,102	-78,601	198,019
Wind, 10 dgr	380C1F2 / 380	17045	66677	134803	17056	124305	-204739	34,101	190,982	-69,936	-2937,31	8021,244	34,101	-69,936	190,982
Permanent loads γg= 1.2	380C1F3 / 380	17045	66131	134516	17054	115909	-193419	34,099	182,04	-58,903	-1884,9	5825,28	34,099	-58,903	182,04
Wind angle: 45 dgr	GW / opgw	2226	9102	17936	2228	21514	-34170	4,454	30,616	-16,234	-834,817	1577,782	4,454	-16,234	30,616
	Comp. gl	4617	18081	36619				4,617	18,081	36,619	897,1655	452,5648	4,617	36,619	18,081
1b	380C1F1 / 380	17036	72547	153803	17037	79755	-157640	34,073	152,302	-3,837	-199,524	7919,704	34,073	-3,837	152,302
Wind, -20 dgr	380C1F2 / 380	17036	72487	153812	17036	78948	-156952	34,072	151,435	-3,14	-131,88	6360,27	34,072	-3,14	151,435
Permanent loads γg= 1.2	380C1F3 / 380	17036	72410	153824	17036	77958	-156163	34,072	150,368	-2,339	-74,848	4811,776	34,072	-2,339	150,368
Wind angle: 45 dgr	GW / opgw	2225	9428	19902	2225	10900	-20985	4,45	20,328	-1,083	-55,6922	1048,729	4,45	-1,083	20,328
	Comp. gl	4615	19245	40840				4,615	19,245	40,84	1000,58	481,0786	4,615	40,84	19,245
3	380C1F1 / 380	29376	103058	216048	29381	125336	-231339	58,757	228,394	-15,291	-795,132	11876,49	58,757	-15,291	228,394
Wind+ice, -5 dgr	380C1F2 / 380	29376	102881	216055	29380	122823	-228863	58,756	225,704	-12,808	-537,936	9479,568	58,756	-12,808	225,704
Permanent loads γg= 1.2	380C1F3 / 380	29376	102659	216072	29379	119728	-225957	58,755	222,387	-9,885	-316,32	7116,384	58,755	-9,885	222,387
Wind angle: 45 dgr	GW / opgw	9244	26385	54955	9247	33116	-58719	18,491	59,501	-3,764	-193,56	3073,833	18,491	-3,764	59,501
	Comp. gl	18676	52715	110835				18,676	52,715	110,835	2715,458	1330,27	18,676	110,835	52,715
4	380C1F1 / 380	20053	73350	155525	20053	79986	-158127	40,106	153,336	-2,602	-135,304	7973,472	40,106	-2,602	153,336
Construction/maintenance, +	380C1F2 / 380	20053	73291	155536	20053	79261	-157616	40,106	152,552	-2,08	-87,36	6407,184	40,106	-2,08	152,552
Permanent loads γg= 1.2	380C1F3 / 380	20053	73217	155553	20053	78368	-157037	40,106	151,585	-1,484	-47,488	4850,72	40,106	-1,484	151,585
Wind angle: 45 dgr	GW / opgw	2978	10709	22648	2978	11966	-23269	5,956	22,675	-0,621	-31,9343	1170,566	5,956	-0,621	22,675
	Comp. gl	6122	21877	46484				6,122	21,877	46,484	1138,858	548,6897	6,122	46,484	21,877
1a	380C1F1 / 380	17056	124980	205651	17056	124980	-205651	34,112	249,96	0	0	12997,92	34,112	0	249,96
Wind, 10 dgr	380C1F2 / 380	17055	118872	197406	17055	118872	-197406	34,11	237,744	0	0	9985,248	34,11	0	237,744
Permanent loads γg= 1.2	380C1F3 / 380	17053	111117	186995	17053	111117	-186995	34,106	222,234	0	0	7111,488	34,106	0	222,234
Wind angle: 90 dgr	GW / opgw	2228	20429	32679	2228	20429	-32679	4,456	40,858	0	0	2104,468	4,456	0	40,858
	Comp. gl	4620	31951	53373				4,62	31,951	53,373	1307,639	792,386	4,62	53,373	31,951
1b	380C1F1 / 380	17036	79030	157020	17036	79030	-157020	34,072	158,06	0	0	8219,12	34,072	0	158,06
Wind, -20 dgr	380C1F2 / 380	17036	78303	156430	17036	78303	-156430	34,072	156,606	0	0	6577,452	34,072	0	156,606
Permanent loads γg= 1.2	380C1F3 / 380	17036	77410	155757	17036	77410	-155757	34,072	154,82	0	0	4954,24	34,072	0	154,82
Wind angle: 90 dgr	GW / opgw	2225	10748	20825	2225	10748	-20825	4,45	21,496	0	0	1108,792	4,45	0	21,496
	Comp. gl	4615	20776	41527				4,615	20,776	41,527	1017,412	518,5881	4,615	41,527	20,776
3	380C1F1 / 380	29380	123077	229108	29380	123077	-229108	58,76	246,154	0	0	12800,01	58,76	0	246,154
Wind+ice, -5 dgr	380C1F2 / 380	29380	120807	226950	29380	120807	-226950	58,76	241,614	0	0	10147,79	58,76	0	241,614
Permanent loads γg= 1.2	380C1F3 / 380	29379	118012	224428	29379	118012	-224428	58,758	236,024	0	0	7552,768	58,758	0	236,024
Wind angle: 90 dgr	GW / opgw	9246	32450	58151	9246	32450	-58151	18,492	64,9	0	0	3351,472	18,492	0	64,9
	Comp. gl	18678	60012	113159				18,678	60,012	113,159	2772,396	1509,051	18,678	113,159	60,012
4	380C1F1 / 380	20053	79334	157666	20053	79334	-157666	40,106	158,668	0	0	8250,736	40,106	0	158,668
Construction/maintenance, +	380C1F2 / 380	20053	78680	157232	20053	78680	-157232	40,106	157,36	0	0	6609,12	40,106	0	157,36
Permanent loads γg= 1.2	380C1F3 / 380	20053	77872	156743	20053	77872	-156743	40,106	155,744	0	0	4983,808	40,106	0	155,744
Wind angle: 90 dgr	GW / opgw	2978	11840	23167	2978	11840	-23167	5,956	23,68	0	0	1222,247	5,956	0	23,68
	Comp. gl	6122	23237	46803				6,122	23,237	46,803	1146,674	582,0097	6,122	46,803	23,237
1a	380C1F1 / 380	17057	130900	213662	17045	67119	-135061	34,102	198,019	78,601	4087,252	10296,99	34,102	78,601	198,019
Wind, 10 dgr	380C1F2 / 380	17056	124305	204739	17045	66677	-134803	34,101	190,982	69,936	2937,312	8021,244	34,101	69,936	190,982
Permanent loads γg= 1.2	380C1F3 / 380	17054	115909	193419	17045	66131	-134516	34,099	182,04	58,903	1884,896	5825,28	34,099	58,903	182,04
Wind angle: -45 dgr	GW / opgw	2228	21514	34170	2226	9102	-17936	4,454	30,616	16,234	834,8172	1577,782	4,454	16,234	30,616
	Comp. gl	4620	33409	55362				4,62	33,409	55,362	1356,369	828,107	4,62	55,362	33,409
1b	380C1F1 / 380	17037	79755	157640	17036	72547	-153803	34,073	152,302	3,837	199,524	7919,704	34,073	3,837	152,302
Wind, -20 dgr	380C1F2 / 380	17036	78948	156952	17036	72487	-153812	34,072	151,435	3,14	131,88	6360,27	34,072	3,14	151,435
Permanent loads γg= 1.2	380C1F3 / 380	17036	77958	156163	17036	72410	-153824	34,072	150,368	2,339	74,848	4811,776	34,072	2,339	150,368
Wind angle: -45 dgr	GW / opgw	2225	10900	20985	2225	9428	-19902	4,45	20,328	1,083	55,69219	1048,729	4,45	1,083	20,328
	Comp. gl	4615	20946	41664				4,615	20,946	41,664	1020,768	522,7531	4,615	41,664	20,946
3	380C1F1 / 380	29381	125336	231339	29376	103058	-216048	58,757	228,394	15,291	795,132	11876,49	58,757	15,291	228,394
Wind+ice, -5 dgr	380C1F2 / 380	29380	122823	228863	29376	102881	-216055	58,756	225,704	12,808	537,936	9479,568	58,756	12,808	225,704
Permanent loads γg= 1.2	380C1F3 / 380	29379	119728	225957	29376	102659	-216072	58,755	222,387	9,885	316,32	7116,384	58,755	9,885	222,387
Wind angle: -45 dgr	GW / opgw	9247	33116	58719	9244	26385	-54955	18,491	59,501	3,764	193,5599	3073,833	18,491	3,764	59,501
	Comp. gl	18679	60793	113667				18,679	60,793	113,667	2784,842	1528,187	18,679	113,667	60,793
4	380C1F1 / 380	20053	79986	158127	20053	73350	-155525	40,106	153,336	2,602	135,304	7973,472	40,106	2,602	153,336
Construction/maintenance, +	380C1F2 / 380	20053	79261	157616	20053	73291	-155536	40,106	152,552	2,08	87,36	6407,184	40,106	2,08	152,552
Permanent loads γg= 1.2	380C1F3 / 380	20053	78368	157037	20053	73217	-155553	40,106	151,585	1,484	47,488	4850,72	40,106	1,484	151,585
Wind angle: -45 dgr	GW / opgw	2978	11966	23269	2978	10709	-22648	5,956	22,675	0,621	31,9343	1170,566	5,956	0,621	22,675
	Comp. gl	6122	23381	46885				6,122	23,381	46,885	1148,683	585,5377	6,122	46,885	23,381
1a	380C1F1 / 380	12782	58487	111876	12782	58487	-111876	25,564	116,974	0	0	6082,648	25,564	0	116,974
Wind, 10 dgr	380C1F2 / 380	12782	57534	110884	12782	57534	-110884	25,564	115,068	0	0	4832,856	25,564	0	115,068
Permanentloads γg=0.9	380C1F3 / 380	12781	56365	109729	12781	56365	-109729	25,562	112,73	0	0	3607,36	25,562	0	112,73
Wind angle: 0 dgr	GW / opgw	1669	8291	15363	1669	8291	-15363	3,338	16,582	0	0	855,2496	3,338	0	16,582
	Comp. gl	3462	15495	29938				3,462	15,495	29,938	733,481	386,8112	3,462	29,938	15,495
1b	380C1F1 / 380	12774	59266	124389	12774	59266	-124389	25,548	118,532	0	0	6163,664	25,548	0	118,532
Wind, -20 dgr	380C1F2 / 380	12774	59160	124371	12774	59160	-124371	25,548	118,32	0	0	4969,44	25,548	0	118,32
Permanent loads γg=0.9	380C1F3 / 380	12774	59026	124354	12774	59026	-124354	25,548	118,052	0	0	3777,664	25,548	0	118,052
Wind angle: 0 dgr	GW / opgw	1668	7663	15950	1668	7663	-15950	3,336	15,326	0	0	790,6596	3,336	0	15,326
	Comp. gl	3461	15550	32688				3,461	15,55	32,688	800,856	388,1566	3,461	32,688	15,55
3	380C1F1 / 380	25109	93214	192328	25109	93214	-192328	50,218	186,428	0	0	9694,256	50,218	0	186,428
Wind+ice, -5 dgr	380C1F2 / 380	25109	92908	192258	25109	92908	-192258	50,218	185,816	0	0	7804,272	50,218	0	185,816
Permanent loads γg=0.9	380C1F3 / 380	25109	92524	192190	25109	92524	-192190	50,218	185,048	0	0	5921,536	50,218	0	185,048
Wind angle: 0 dgr	GW / opgw	8685	25652	52524	8685	25652	-52524	17,37	51,304	0	0	2651,458	17,37	0	51,304
	Comp. gl	17518	50875	105724				17,518	50,875	105,724	2590,238	1282,787	17,518	105,724	50,875
4	380C1F1 / 380	15788	61248	128638	15788	61248	-128638	31,576	122,496	0	0	6369,792	31,576	0	122,496
Construction/maintenance, +	380C1F2 / 380	15788	61149	128635	15788	61149	-128635	31,576	122,298	0	0	5136,516	31,576	0	122,298
Permanent loads γg=0.9	380C1F3 / 380	15788	61023	128636	15788	61023	-128636	31,576	122,046	0	0	3905,472	31,576	0	122,046

Belasting op mastvoet, belastinggeval

	M_{langs}	M_{dwars}	N	V_{langs}	V_{dwars}
1a	910,4935	19056,03	111,343	37,163	456,018
Wind angle: 0 dgr					
1b	1000,384	19831,7	111,281	40,832	475,563
Wind angle: 0 dgr					
3	0	31674,09	232,096	0	783,986
Wind angle: 0 dgr					
4	1138,393	20230,99	132,396	46,465	485,494
Wind angle: 0 dgr					
6	982,842	18718,34	125,267	40,116	449,068
0					
1a	-8847,11	26173,86	111,373	-187,055	619,738
Wind angle: 45 dgr					
1b	538,6358	20621,56	111,282	30,441	493,678
Wind angle: 45 dgr					
3	872,5096	32876,54	213,435	69,087	788,701
Wind angle: 45 dgr					
4	836,7717	20950,63	132,396	39,697	502,025
Wind angle: 45 dgr					
1a	1307,639	32991,51	111,404	53,373	782,747
Wind angle: 90 dgr					
1b	1017,412	21378,19	111,281	41,527	511,758
Wind angle: 90 dgr					
3	2772,396	35361,09	213,448	113,159	848,704
Wind angle: 90 dgr					
4	1146,674	21647,92	132,396	46,803	518,689
Wind angle: 90 dgr					
1a	11100,65	26549,4	111,376	279,036	635,066
Wind angle: -45 dgr					
1b	1482,712	20663,23	111,282	52,063	495,379
Wind angle: -45 dgr					
3	4627,789	33074,46	213,438	155,415	796,779
Wind angle: -45 dgr					
4	1450,769	20987,48	132,396	53,672	503,529
Wind angle: -45 dgr					
1a	733,481	15764,92	83,49	29,938	376,849
Wind angle: 0 dgr					
1b	800,856	16089,58	83,441	32,688	385,78
Wind angle: 0 dgr					
3	2590,238	27354,31	185,542	105,724	659,471
Wind angle: 0 dgr					
4	962,458	16824,47	104,536	39,284	403,791
Wind angle: 0 dgr					

Wind angle: 0 dgr	GW / ogw=	2421	9163	19167	2421	9163	-19167	4,842	18,326	0	0	946,0761	4,842	0	18,326													
	Comp. gl	4966	18625	39284				4,966	18,625	39,284	962,458	466,617	4,966	39,284	18,625													
6	180C1F1 / 180I12781		49433	106010	12781	49433	-106010	25,562	98,866	0	0	5141,032	25,562	0	98,866		6	702,317	13456,77	83,486	28,666	322,847							
Permanent, +10 dgr	180C1F2 / 180I12781		49433	106010	12781	49433	-106010	25,562	98,866	0	0	4152,372	25,562	0	98,866		0												
Permanent loads wg= 1.35	180C1F3 / 180I12781		49433	106010	12781	49433	-106010	25,562	98,866	0	0	3163,712	25,562	0	98,866													
	GW / ogw=	1669	6441	13813	1669	6441	-13813	3,338	12,882	0	0	664,9808	3,338	0	12,882													
	Comp. gl	3462	13367	28666				3,462	13,367	28,666	702,317	334,6752	3,462	28,666	13,367													
1a	180C1F1 / 180I12781		54545	108097	12792	126013	-201187	25,573	180,558	-95,09	-4944,68	9389,016	25,573	-95,09	180,558	1a	-11147,6	23718,07	83,517	-243,965	560,077							
Wind, 10 dgr	180C1F2 / 180I12781		54030	107683	12791	119007	-193383	25,572	173,037	-85,7	-3599,4	7267,554	25,572	-85,7	173,037	Wind angle: 45 dgr												
Permanent loads wg=0.9	180C1F3 / 180I12781		53398	107211	12789	110005	-180763	25,57	163,403	-73,552	-2353,66	5228,896	25,57	-73,552	163,403													
Wind angle: 45 dgr	GW / ogw=	1669	7466	14428	1671	21038	-31151	3,34	28,504	-18,723	-962,812	1468,328	3,34	-18,723	28,504													
	Comp. gl	3462	14575	29100				3,462	14,575	29,1	712,95	364,2712	3,462	29,1	14,575													
1b	180C1F1 / 180I12774		58810	124344	12775	67185	-130687	25,549	125,995	-6,343	-329,836	6551,74	25,549	-6,343	125,995	1b	31,80655	17014,86	83,444	15,28	406,982							
Wind, -20 dgr	180C1F2 / 180I12774		58746	124344	12775	66217	-129653	25,549	124,963	-5,309	-222,978	5248,446	25,549	-5,309	124,963	Wind angle: 45 dgr												
Permanent loads wg=0.9	180C1F3 / 180I12774		58665	124348	12774	65032	-128446	25,548	123,697	-4,098	-131,136	3958,304	25,548	-4,098	123,697													
Wind angle: 45 dgr	GW / ogw=	1668	7574	15927	1669	9312	-17579	3,337	16,886	-1,652	-84,9524	870,8818	3,337	-1,652	16,886													
	Comp. gl	3461	15441	32682				3,461	15,441	32,682	800,709	385,4861	3,461	32,682	15,441													
3	180C1F1 / 180I25109		91802	192127	25114	116091	-211518	50,223	207,993	-19,391	-1008,33	10815,64	50,223	-19,391	207,993		3	267,2353	30110,44	185,557	52,931	722,274							
Wind=cix, -5 dgr	180C1F2 / 180I25109		91720	192120	25113	113341	-208533	50,222	205,061	-16,413	-689,346	8612,562	50,222	-16,413	205,061	Wind angle: 45 dgr												
Permanent loads wg=0.9	180C1F3 / 180I25109		91490	192121	25112	109949	-204991	50,221	201,439	-12,87	-411,84	6446,048	50,221	-12,87	201,439													
Wind angle: 45 dgr	GW / ogw=	8685	25248	52517	8688	32173	-56698	17,373	57,421	4,181	-215,004	2966,021	17,373	-4,181	57,421													
	Comp. gl	17518	50360	105786				17,518	50,36	105,786	2591,757	1270,17	17,518	105,786	50,36													
4	180C1F1 / 180I15788		60818	128650	15789	68194	-132843	31,577	129,012	-4,193	-218,036	6708,624	31,577	-4,193	129,012		4	470,9567	17627,9	104,537	28,17	422,237							
Construction/maintenance, +(	180C1F2 / 180I15788		60757	128657	15788	67364	-132105	31,576	128,121	-3,448	-144,816	5381,082	31,576	-3,448	128,121	Wind angle: 45 dgr												
Permanent loads wg=0.9	180C1F3 / 180I15788		60680	128668	15788	66345	-131256	31,576	127,025	-2,588	-82,816	4064,8	31,576	-2,588	127,025													
Wind angle: 45 dgr	GW / ogw=	2421	9084	19165	2421	10470	-20062	4,842	19,554	-0,897	-46,1273	1009,225	4,842	-0,897	19,554													
	Comp. gl	4966	18525	39296				4,966	18,525	39,296	962,752	464,167	4,966	39,296	18,525													
1a	180C1F1 / 180I12791		119726	194390	12791	119726	-194390	25,582	239,452	0	0	12451,5	25,582	0	239,452	1a	1222,256	31468,71	83,546	49,888	745,623							
Wind, 10 dgr	180C1F2 / 180I12790		113193	185234	12790	113193	-185234	25,58	226,386	0	0	9508,212	25,58	0	226,386	Wind angle: 90 dgr												
Permanent loads wg=0.9	180C1F3 / 180I12789		104817	173489	12789	104817	-173489	25,578	209,634	0	0	6708,288	25,578	0	209,634													
Wind angle: 90 dgr	GW / ogw=	1671	19913	31574	1671	19913	-31574	3,342	39,826	0	0	2050,552	3,342	0	39,826													
	Comp. gl	3464	30325	49888				3,464	30,325	49,888	1222,256	750,1503	3,464	49,888	30,325													
1b	180C1F1 / 180I12775		66315	129755	12775	66315	-129755	25,55	132,63	0	0	6896,76	25,55	0	132,63	1b	829,57	17884,33	83,445	33,86	427,734							
Wind, -20 dgr	180C1F2 / 180I12774		65444	128858	12774	65444	-128858	25,548	130,888	0	0	5497,296	25,548	0	130,888	Wind angle: 90 dgr												
Permanent loads wg=0.9	180C1F3 / 180I12774		64379	127815	12774	64379	-127815	25,548	128,758	0	0	4120,256	25,548	0	128,758													
Wind angle: 90 dgr	GW / ogw=	1669	9129	17354	1669	9129	-17354	3,338	18,258	0	0	941,4363	3,338	0	18,258													
	Comp. gl	3461	17200	33860				3,461	17,2	33,86	829,57	428,5816	3,461	33,86	17,2													
3	180C1F1 / 180I25113		113619	208830	25113	113619	-208830	50,226	227,238	0	0	11816,38	50,226	0	227,238		3	2658,226	32772,74	185,57	108,499	786,45							
Wind=cix, -5 dgr	180C1F2 / 180I25112		111132	206207	25112	111132	-206207	50,224	222,264	0	0	9335,088	50,224	0	222,264	Wind angle: 90 dgr												
Permanent loads wg=0.9	180C1F3 / 180I25112		108069	201109	25112	108069	-201109	50,224	216,138	0	0	6916,416	50,224	0	216,138													
Wind angle: 90 dgr	GW / ogw=	8688	31486	56084	8688	31486	-56084	17,376	62,972	0	0	3251,478	17,376	0	62,972													
	Comp. gl	17520	57838	108499				17,52	57,838	108,499	2658,226	1453,385	17,52	108,499	57,838													
4	180C1F1 / 180I15788		67448	132178	15788	67448	-132178	31,576	134,896	0	0	7014,592	31,576	0	134,896		4	976,2515	18393,57	104,536	39,847	440,511							
Construction/maintenance, +(	180C1F2 / 180I15788		66700	131544	15788	66700	-131544	31,576	133,4	0	0	5602,8	31,576	0	133,4	Wind angle: 90 dgr												
Permanent loads wg=0.9	180C1F3 / 180I15788		65782	130818	15788	65782	-130818	31,576	131,564	0	0	4210,048	31,576	0	131,564													
Wind angle: 90 dgr	GW / ogw=	2421	10329	19926	2421	10329	-19926	4,842	20,658	0	0	1065,997	4,842	0	20,658													
	Comp. gl	4966	19993	39847				4,966	19,993	39,847	976,2515	500,133	4,966	39,847	19,993													
1a	180C1F1 / 180I12792		126013	203187	12781	54545	-108097	25,573	180,558	95,09	4944,68	9389,016	25,573	95,09	180,558	1a	13137,13	24142,26	83,52	325,17	577,391							
Wind, 10 dgr	180C1F2 / 180I12791		119007	193383	12781	54030	-107683	25,572	173,037	85,7	3599,4	7267,554	25,572	85,7	173,037	Wind angle: -45 dgr												
Permanent loads wg=0.9	180C1F3 / 180I12789		110005	180763	12781	53398	-107211	25,57	163,403	73,552	2353,664	5228,896	25,57	73,552	163,403													
Wind angle: -45 dgr	GW / ogw=	1671	21038	31151	1669	7466	-14428	3,34	28,504	18,723	962,8116	1468,328	3,34	18,723	28,504													
	Comp. gl	3465	31889	52105				3,465	31,889	52,105	1276,573	788,4704	3,465	52,105	31,889													
1b	180C1F1 / 180I12775		67185	130687	12774	58810	-124344	25,549	125,995	6,343	329,836	6551,74	25,549	6,343	125,995	1b	1603,568	17062,93	83,444	51,47	408,944							
Wind, -20 dgr	180C1F2 / 180I12775		66217	129653	12774	58746	-124344	25,549	124,963	5,309	222,978	5248,446	25,549	5,309	124,963	Wind angle: -45 dgr												
Permanent loads wg=0.9	180C1F3 / 180I12774		65032	128446	12774	58665	-124348	25,548	123,697	4,098	131,136	3958,304	25,548	4,098	123,697													
Wind angle: -45 dgr	GW / ogw=	1669	9312	17579	1668	7574	-15927	3,337	16,886	1,652	84,95245	870,8818	3,337	1,652	16,886													
	Comp. gl	3461	17403	34068				3,461	17,403	34,068	834,666	433,5551	3,461	34,068	17,403													
3	180C1F1 / 180I25114		116091	211518	25109	91902	-192127	50,223	207,993	19,391	1008,332	10815,64	50,223	19,391	207,993		3	4996,541	30313,4	185,559	161,917	730,558							
Wind=cix, -5 dgr	180C1F2 / 180I25113		113341	208533	25109	91720	-192120	50,222	205,061	16,413	689,346	8612,562	50,222	16,413	205,061	Wind angle: -45 dgr												
Permanent loads wg=0.9	180C1F3 / 180I25112		109949	204991	25109	91490	-192121	50,221	201,439	12,87	411,84	6446,048	50,221	12,87	201,439													
Wind angle: -45 dgr	GW / ogw=	8688	32173	56698	8685	25248	-52517	17,373	57,421	4,181	215,0037	2966,021	17,373	4,181	57,421													
	Comp. gl	17520	58644	109062				17,52	58,644	109,062	2672,019	1473,132	17,52	109,062	58,644													
4	180C1F1 / 180I15789		68194	132843	15788	60818	-128650	31,577	129,012	4,193	218,036	6708,624	31,577	4,193	129,012		4	1470,913	17667,78	104,537	51,09	423,865							
Construction/maintenance, +(	180C1F2 / 180I15788		67364	132105	15788	60757	-128657	31,576	128,121	3,448	144,816	5381,082	31,576	3,448	128,121	Wind angle: -45 dgr												
Permanent loads wg=0.9	180C1F3 / 180I15788		66345	131256	15788	60680	-128668	31,576	127,025	2,588	82,816	4064,8	31,576	2,588	127,025													
Wind angle: -45 dgr	GW / ogw=	2421	10470	20062	2421	9084	-19165	4,842	19,554	0,897	46,12733	1009,225	4,842	0,897	19,554													
	Comp. gl	4966	20153	39964				4,966	20,153	39,964	979,118	504,053	4,966	39,964	20,153													

W2H400A 08A-AN1

Hoogte mast		52 m	
Hoogte onderste stroomdraad (F3)		26 m	
		Hoogte	Excentriciteit ophanging t.o.v. hart mast
Bliksemdraad = GW / (H_{mast} -	0,576 m =	51,424 m	0,76 m
1e traverse - 380C1F1 F2 +	10 m =	52 m	0 m
2e traverse - 380C1F2 F3 +	10 m =	42 m	0 m
3e traverse - 380C1F3		32 m	0 m
Passieve lijn = Comp C F3 -	7,5 m =	24,5 m	2,075 m

Uit mast (excl belastingsfactoren)			Uit lijnen (incl belastingsfactoren)				
N	V	M	Nmin	Nmax	Vmax	Mlangs;ma	Mdwars;max
[kN]	[kN]	[kNm]	[kN]	[kN]	[kN]	[kNm]	[kNm]
327	85	2159	43	71	627	25589	13974

			Belastingen uit lijnen M_{langs}	M_{dwars}	N	V_{langs}	V_{dwars}	Belasting uit mast N	V	M
Perm load 1,2	0 deg	1a	18731	9180	58	457	224	327	85	2159
		1b	21402	10125	58	522	247	327	16	405
		3	23126	11212	71	568	275	327	24	607
		4	21340	10099	67	522	247	327	16	405
		6	20547	9594	65	502	234			
	45 deg	1a	18670	9002	58	456	219	327	85	2159
		1b	21408	10081	58	522	246	327	16	405
		3	23095	11056	71	568	271	327	24	607
		4	21349	10057	67	522	246	327	16	405
	90 deg	1a	21715	12135	58	527	294	327	85	2159
		1b	21630	10712	58	527	261	327	16	405
		3	25252	13675	71	619	334	327	24	607
		4	21488	10649	67	525	260	327	16	405
	-45 deg	1a	22159	12492	58	538	302	327	85	2159
		1b	21678	10780	58	529	262	327	16	405
		3	**25589**	**13974**	**71**	**627**	**342**	327	24	607
		4	21523	10712	67	526	261	327	16	405
Perm load 0,9	0 deg	1a	14902	7392	43	364	180	245	85	2159
		1b	17288	8203	**43**	422	200	245	16	405
		3	19386	9465	56	477	232	245	24	607
		4	17562	8334	52	430	204	245	16	405
		6	**14770**	**6896**	43	**361**	**168**			
	45 deg	1a	14790	7190	43	361	175	245	85	2159
		1b	17288	8158	**43**	422	199	245	16	405
		3	19326	9296	56	476	228	245	24	607
		4	17567	8290	52	430	202	245	16	405
	90 deg	1a	18985	10859	43	460	262	245	85	2159
		1b	17697	8875	**43**	431	216	245	16	405
		3	22235	12265	56	545	300	245	24	607
		4	17827	8939	52	436	218	245	16	405
	-45 deg	1a	19539	11268	43	473	272	245	85	2159
		1b	17772	8956	**43**	433	218	245	16	405
		3	22658	12604	56	555	308	245	24	607
		4	17881	9010	52	437	220	245	16	405

regel			Loadcase	Totaal M_{langs}	M_{dwars}	N	V_{langs}	V_{dwars}	Totaal moment						
1	Perm load 1,2	0 deg	1a	20890	9180	385	542	224	22818,53	1					
2	Perm load 1,2	0 deg	1b	21807	10125	385	538	247	24042,5	2					
3	Perm load 1,2	0 deg	3	23733	11212	398	592	275	26248,49	3					
4	Perm load 1,2	0 deg	4	21745	10099	394	538	247	23975,91	4					
5	Perm load 1,2	0 deg	6							5					
6										6					
7	Perm load 1,2	45 deg	1a	20197	10528	385	516	279	22776,05	7					
8	Perm load 1,2	45 deg	1b	21694	10368	385	534	257	24043,9	8					
9	Perm load 1,2	45 deg	3	23524	11485	398	584	288	26178,06	9					
10	Perm load 1,2	45 deg	4	21635	10343	394	533	257	23980,05	10					
11										11					
12	Perm load 1,2	90 deg	1a	21715	14294	385	527	379	25997,25	12				x	
13	Perm load 1,2	90 deg	1b	21630	11117	385	527	277	24319,37	13					
14	Perm load 1,2	90 deg	3	25252	14283	398	619	358	29011,31	14					
15	Perm load 1,2	90 deg	4 Construc	21488	11054	394	525	276	24164,19	15					
16										16					
17	Perm load 1,2	-45 deg	1a	23686	14019	385	598	362	27523,45	17					
18	Perm load 1,2	-45 deg	1b	21964	11067	385	540	274	24594,94	18					
19	Perm load 1,2	-45 deg	3	26019	14403	398	644	358	29739,43	19	x	x	x	x	x
20	Perm load 1,2	-45 deg	4	21810	10998	394	537	272	24425,71	20					
21										21					
22	Perm load 0,9	0 deg	1a	17061	7392	289	449	180	18593,33	22					
23	Perm load 0,9	0 deg	1b	17693	8203	289	438	200	19502,06	23					
24	Perm load 0,9	0 deg	3	19993	9465	302	501	232	22119,89	24					
25	Perm load 0,9	0 deg	4	17967	8334	298	446	204	19805,75	25					
26	Perm load 0,9	0 deg	6							26					
27										27					
28	Perm load 0,9	45 deg	1a	16317	8716	289	421	235	18498,9	28					
29	Perm load 0,9	45 deg	1b	17574	8444	289	433	210	19497,65	29					
30	Perm load 0,9	45 deg	3	19755	9725	302	493	245	22019,07	30					
31	Perm load 0,9	45 deg	4 Construc	17853	8577	298	441	214	19806,14	31					
32										32					
33	Perm load 0,9	90 deg	1a	18985	13018	289	460	347	23019,83	33					
34	Perm load 0,9	90 deg	1b	17697	9280	289	431	232	19982,02	34					
35	Perm load 0,9	90 deg	3	22235	12873	302	545	324	25692,11	35					
36	Perm load 0,9	90 deg	4	17827	9344	298	436	234	20127,45	36					
37										37					
38	Perm load 0,9	-45 deg	1a	21066	12794	289	533	332	24647	38					
39	Perm load 0,9	-45 deg	1b	18059	9242	289	444	229	20286,37	39					
40	Perm load 0,9	-45 deg	3	23087	13033	302	572	325	26511,66	40					
41	Perm load 0,9	-45 deg	4	18167	9297	298	448	231	20407,83	41					
			Max	26019	14403	398	644	379	29739						

samenvatting

	Mast	Bijlage		Wind	Loadcase	M_{langs}	M_{dwars}	N	V_{langs}	V_{dwars}
12	W2H400A+	08A-AN1	Perm load	90 deg	1a	21715	14294	385	527	379
19	W2H400A+	08A-AN1	Perm load	-45 deg	3	26019	14403	398	644	358

W2H400A+5 TOWER **APPENDIX: AN1**

Loadcases for tower strength (special limit state)

Loadcase according to 50341-3-15

	Attachment point	[N]	AHEAD [N]	[N]	[N]	BACK [N]	[N]	Totaal Vert [kN]	Dwars [kN]	Langs [kN]	Belastingen op mastvoet, per lijn M_{langs}	M_{dwars}	N	V_{langs}	V_{dwars}	Belasting op mastvoet, belastinggeval	M_{langs}	M_{dwars}	N	V_{langs}	V_{dwars}
1a	380C1F1 / 380	17045	65978	134443	0	0	0	17,045	65,978	134,443	6991,036	3430,856	17,045	134,443	65,978	1a	18731,39	9180,239	57,978	457,131	223,568
Wind, 10 dgr	380C1F2 / 380	17045	65655	134298	0	0	0	17,045	65,655	134,298	5640,516	2757,51	17,045	134,298	65,655	Wind angle: 0 dgr					
Permanent loads yg= 1.2	380C1F3 / 380	17045	65254	134141	0	0	0	17,045	65,254	134,141	4292,512	2088,128	17,045	134,141	65,254						
Wind angle: 0 dgr	GW / opgw	2226	8869	17762	0	0	0	2,226	8,869	17,762	913,3931	457,7712	2,226	17,762	8,869						
	Comp. gl	4617	17812	36487	0	0	0	4,617	17,812	36,487	893,9315	445,9743	4,617	36,487	17,812						
1b	380C1F1 / 380	17036	72723	153787	0	0	0	17,036	72,723	153,787	7996,924	3781,596	17,036	153,787	72,723	1b	21401,88	10124,72	57,948	522,121	246,669
Wind, -20 dgr	380C1F2 / 380	17036	72647	153793	0	0	0	17,036	72,647	153,793	6459,306	3051,174	17,036	153,793	72,647	Wind angle: 0 dgr					
Permanent loads yg= 1.2	380C1F3 / 380	17036	72551	153803	0	0	0	17,036	72,551	153,803	4921,696	2321,632	17,036	153,803	72,551						
Wind angle: 0 dgr	GW / opgw	2225	9461	19903	0	0	0	2,225	9,461	19,903	1023,492	488,2135	2,225	19,903	9,461						
	Comp. gl	4615	19287	40835	0	0	0	4,615	19,287	40,835	1000,458	482,1076	4,615	40,835	19,287						
3	380C1F1 / 380	19802	77768	160718	0	0	0	19,802	77,768	160,718	8357,336	4043,936	19,802	160,718	77,768	3	23126,2	11211,96	70,964	568,26	274,92
Wind+ice, -5 dgr	380C1F2 / 380	19802	77517	160650	0	0	0	19,802	77,517	160,65	6747,3	3255,714	19,802	160,65	77,517	Wind angle: 0 dgr					
Permanent loads yg= 1.2	380C1F3 / 380	19802	77203	160581	0	0	0	19,802	77,203	160,581	5138,592	2470,496	19,802	160,581	77,203						
Wind angle: 0 dgr	GW / opgw	3796	14234	28538	0	0	0	3,796	14,234	28,538	1467,538	734,8542	3,796	28,538	14,234						
	Comp. gl	7762	28198	57773	0	0	0	7,762	28,198	57,773	1415,439	706,9572	7,762	57,773	28,198						
4	380C1F1 / 380	19451	71802	151812	0	0	0	19,451	71,802	151,812	7894,224	3733,704	19,451	151,812	71,802	4	21340,38	10099,05	67,002	521,837	246,538
Construction/maintenance, +	380C1F2 / 380	19451	71728	151822	0	0	0	19,451	71,728	151,822	6376,524	3012,576	19,451	151,822	71,728	Wind angle: 0 dgr					
Permanent loads yg= 1.2	380C1F3 / 380	19451	71635	151838	0	0	0	19,451	71,635	151,838	4858,816	2292,32	19,451	151,838	71,635						
Wind angle: 0 dgr	GW / opgw	2828	10310	21723	0	0	0	2,828	10,31	21,723	1117,084	532,3307	2,828	21,723	10,31						
	Comp. gl	5821	21063	44642	0	0	0	5,821	21,063	44,642	1093,729	528,1221	5,821	44,642	21,063						
6	380C1F1 / 380	19177	68716	147362	0	0	0	19,177	68,716	147,362	7662,824	3573,232	19,177	147,362	68,716	6	20546,59	9593,709	65,231	501,573	233,887
Permanent, +10 dgr	380C1F2 / 380	19177	68716	147362	0	0	0	19,177	68,716	147,362	6189,204	2886,072	19,177	147,362	68,716	0					
Permanent loads yg= 1.35	380C1F3 / 380	19177	68716	147362	0	0	0	19,177	68,716	147,362	4715,584	2198,912	19,177	147,362	68,716						
	GW / opgw	2505	9033	19371	0	0	0	2,505	9,033	19,371	996,1343	466,4168	2,505	19,371	9,033						
	Comp. gl	5195	18706	40116	0	0	0	5,195	18,706	40,116	982,842	469,0766	5,195	40,116	18,706						
1a	380C1F1 / 380	17045	64613	133947	0	0	0	17,045	64,613	133,947	6965,244	3359,876	17,045	133,947	64,613	1a	18669,93	9001,728	57,978	455,712	219,317
Wind, 10 dgr	380C1F2 / 380	17045	64427	133907	0	0	0	17,045	64,427	133,907	5624,094	2705,934	17,045	133,907	64,427	Wind angle: 45 dgr					
Permanent loads yg= 1.2	380C1F3 / 380	17045	64193	133866	0	0	0	17,045	64,193	133,866	4283,712	2054,176	17,045	133,866	64,193						
Wind angle: 45 dgr	GW / opgw	2226	8595	17608	0	0	0	2,226	8,595	17,608	905,4738	443,681	2,226	17,608	8,595						
	Comp. gl	4617	17489	36384	0	0	0	4,617	17,489	36,384	891,408	438,0608	4,617	36,384	17,489						
1b	380C1F1 / 380	17036	72393	153827	0	0	0	17,036	72,393	153,827	7999,004	3764,436	17,036	153,827	72,393	1b	21407,6	10081,32	57,948	522,264	245,632
Wind, -20 dgr	380C1F2 / 380	17036	72346	153837	0	0	0	17,036	72,346	153,837	6461,154	3038,532	17,036	153,837	72,346	Wind angle: 45 dgr					
Permanent loads yg= 1.2	380C1F3 / 380	17036	72286	153850	0	0	0	17,036	72,286	153,85	4923,2	2313,152	17,036	153,85	72,286						
Wind angle: 45 dgr	GW / opgw	2225	9399	19903	0	0	0	2,225	9,399	19,903	1023,492	485,0252	2,225	19,903	9,399						
	Comp. gl	4615	19208	40847	0	0	0	4,615	19,208	40,847	1000,752	480,1721	4,615	40,847	19,208						
3	380C1F1 / 380	19802	76696	160509	0	0	0	19,802	76,696	160,509	8346,468	3988,192	19,802	160,509	76,696	3	23094,59	11056,02	70,964	567,532	271,151
Wind+ice, -5 dgr	380C1F2 / 380	19802	76547	160498	0	0	0	19,802	76,547	160,498	6740,916	3214,974	19,802	160,498	76,547	Wind angle: 45 dgr					
Permanent loads yg= 1.2	380C1F3 / 380	19802	76360	160493	0	0	0	19,802	76,36	160,493	5135,776	2443,52	19,802	160,493	76,36						
Wind angle: 45 dgr	GW / opgw	3796	13832	28363	0	0	0	3,796	13,832	28,363	1458,539	714,1817	3,796	28,363	13,832						
	Comp. gl	7762	27716	57669	0	0	0	7,762	27,716	57,669	1412,891	695,1482	7,762	57,669	27,716						
4	380C1F1 / 380	19451	71480	151870	0	0	0	19,451	71,48	151,87	7897,24	3716,96	19,451	151,87	71,48	4	21348,58	10056,72	67,002	522,038	245,526
Construction/maintenance, +	380C1F2 / 380	19451	71434	151881	0	0	0	19,451	71,434	151,881	6379,002	3000,228	19,451	151,881	71,434	Wind angle: 45 dgr					
Permanent loads yg= 1.2	380C1F3 / 380	19451	71375	151896	0	0	0	19,451	71,375	151,896	4860,672	2284	19,451	151,896	71,375						
Wind angle: 45 dgr	GW / opgw	2828	10251	21731	0	0	0	2,828	10,251	21,731	1117,495	529,2967	2,828	21,731	10,251						
	Comp. gl	5821	20986	44660	0	0	0	5,821	20,986	44,66	1094,17	526,2356	5,821	44,66	20,986						
1a	380C1F1 / 380	17049	88694	157786	0	0	0	17,049	88,694	157,786	8204,872	4612,088	17,049	157,786	88,694	1a	21714,81	12135,2	57,99	527,428	293,804
Wind, 10 dgr	380C1F2 / 380	17048	85924	154369	0	0	0	17,048	85,924	154,369	6483,498	3608,808	17,048	154,369	85,924	Wind angle: 90 dgr					
Permanent loads yg= 1.2	380C1F3 / 380	17048	82496	150248	0	0	0	17,048	82,496	150,248	4807,936	2639,872	17,048	150,248	82,496						
Wind angle: 90 dgr	GW / opgw	2227	13529	23228	0	0	0	2,227	13,529	23,228	1194,477	697,4078	2,227	23,228	13,529						
	Comp. gl	4618	23161	41797	0	0	0	4,618	23,161	41,797	1024,027	577,0269	4,618	41,797	23,161						
1b	380C1F1 / 380	17036	77213	155617	0	0	0	17,036	77,213	155,617	8092,084	4015,076	17,036	155,617	77,213	1b	21629,89	10711,83	57,948	527,4	260,647
Wind, -20 dgr	380C1F2 / 380	17036	76684	155257	0	0	0	17,036	76,684	155,257	6520,794	3220,728	17,036	155,257	76,684	Wind angle: 90 dgr					
Permanent loads yg= 1.2	380C1F3 / 380	17036	76032	154852	0	0	0	17,036	76,032	154,852	4955,264	2433,024	17,036	154,852	76,032						
Wind angle: 90 dgr	GW / opgw	2225	10368	20455	0	0	0	2,225	10,368	20,455	1051,878	534,855	2,225	20,455	10,368						
	Comp. gl	4615	20350	41219	0	0	0	4,615	20,35	41,219	1009,866	508,1511	4,615	41,219	20,35						
3	380C1F1 / 380	19805	94794	175433	0	0	0	19,805	94,794	175,433	9122,516	4929,288	19,805	175,433	94,794	3	25251,94	13675,49	70,974	618,923	334,309
Wind+ice, -5 dgr	380C1F2 / 380	19805	92704	173118	0	0	0	19,805	92,704	173,118	7270,956	3893,568	19,805	173,118	92,704	Wind angle: 90 dgr					
Permanent loads yg= 1.2	380C1F3 / 380	19804	90133	170380	0	0	0	19,804	90,133	170,38	5452,16	2884,256	19,804	170,38	90,133						
Wind angle: 90 dgr	GW / opgw	3797	20828	35526	0	0	0	3,797	20,828	35,526	1826,889	1073,945	3,797	35,526	20,828						
	Comp. gl	7763	35850	64466	0	0	0	7,763	35,85	64,466	1579,417	894,4332	7,763	64,466	35,85						
4	380C1F1 / 380	19451	76022	153058	0	0	0	19,451	76,022	153,058	7959,016	3953,144	19,451	153,058	76,022	4	21487,79	10648,84	67,002	525,207	259,632
Construction/maintenance, +	380C1F2 / 380	19451	75535	152787	0	0	0	19,451	75,535	152,787	6417,054	3172,47	19,451	152,787	75,535	Wind angle: 90 dgr					
Permanent loads yg= 1.2	380C1F3 / 380	19451	74931	152486	0	0	0	19,451	74,931	152,486	4879,552	2397,792	19,451	152,486	74,931						
Wind angle: 90 dgr	GW / opgw	2828	11112	22051	0	0	0	2,828	11,112	22,051	1133,951	573,5728	2,828	22,051	11,112						
	Comp. gl	5821	22032	44825	0	0	0	5,821	22,032	44,825	1098,213	551,8626	5,821	44,825	22,032						
1a	380C1F1 / 380	17049	91433	161228	0	0	0	17,049	91,433	161,228	8383,856	4754,516	17,049	161,228	91,433	1a	22159,01	12492,29	57,991	537,957	302,306
Wind, 10 dgr	380C1F2 / 380	17049	88385	157402	0	0	0	17,049	88,385	157,402	6610,884	3712,17	17,049	157,402	88,385	Wind angle: -45 dgr					
Permanent loads yg= 1.2	380C1F3 / 380	17048	84603	152765	0	0	0	17,048	84,603	152,765	4888,48	2707,296	17,048	152,765	84,603						
Wind angle: -45 dgr	GW / opgw	2227	14071	23957	0	0	0	2,227	14,071	23,957	1231,965	725,2796	2,227	23,957	14,071						
	Comp. gl	4618	23814	42605	0	0	0	4,618	23,814	42,605	1043,823	593,0254	4,618	42,605	23,814						
1b	380C1F1 / 380	17036	77740	155999	0	0	0	17,036	77,74	155,999	8111,948	4042,48	17,036	155,999	77,74	1b	21678,24	10780,48	57,948	528,53	262,278
Wind, -20 dgr	380C1F2 / 380	17036	77154	155575	0	0	0	17,036	77,154	155,575	6534,15	3240,468	17,036	155,575	77,154	Wind angle: -45 dgr					
Permanent loads yg= 1.2	380C1F3 / 380	17036	76433	155096	0	0	0	17,036	76,433	155,096	4963,072	2445,856	17,036	155,096	76,433						
Wind angle: -45 dgr	GW / opgw	2225	10478	20558	0	0	0	2,225	10,478	20,558	1057,175	540,5117	2,225	20,558	10,478						
	Comp. gl	4615	20473	41302	0	0	0	4,615	20,473	41,302	1011,899	511,1646	4,615	41,302	20,473						
3	380C1F1 / 380	19806	96873	177802	0	0	0	19,806	96,873	177,802	9245,704	5037,396	19,806	177,802	96,873	3	25589,39	13974,03	70,978	627,012	341,51
Wind+ice, -5 dgr	380C1F2 / 380	19805	94560	175171	0	0	0	19,805	94,56	175,171	7357,182	3971,52	19,805	175,171	94,56	Wind angle: -45 dgr					
Permanent loads yg= 1.2	380C1F3 / 380	19805	91711	172045	0	0	0	19,805	91,711	172,045	5505,44	2934,752	19,805	172,045	91,711						
Wind angle: -45 dgr	GW / opgw	3798	21594	36481	0	0	0	3,798	21,594	36,481	1875,999	1113,336	3,798	36,481	21,594						
	Comp. gl	7764	36772	65513	0	0	0	7,764	36,772	65,513	1605,069	917,0243	7,764	65,513	36,772						
4	380C1F1 / 380	19451	76507	153348	0	0	0	19,451	76,507	153,348	7974,096	3978,364	19,451	153,348	76,507	4	21523,43	10711,62	67,002	526,036	261,124
Construction/maintenance, +	380C1F2 / 380	19451	75968	153026	0	0	0	19,451	75,968	153,026	6427,092	3190,656	19,451	153,026	75,968	Wind angle: -45 dgr					
Permanent loads yg= 1.2	380C1F3 / 380	19451	75302	152666	0	0	0	19,451	75,302	152,666	4885,312	2409,664	19,451	152,666	75,302						
Wind angle: -45 dgr	GW / opgw	2828	11206	22119	0	0	0	2,828	11,206	22,119	1137,447	578,4066	2,828	22,119	11,206						
	Comp. gl	5821	22141	44877	0	0	0	5,821	22,141	44,877	1099,487	554,5331	5,821	44,877	22,141						
1a	380C1F1 / 380	12781	53222	107088	0	0	0	12,781	53,222	107,088	5568,576	2767,544	12,781	107,088	53,222	1a	14901,94	7391,629	43,474	363,539	179,923
Wind, 10 dgr	380C1F2 / 380	12781	52851	106842	0	0	0	12,781	52,851	106,842	4487,364	2219,742	12,781	106,842	52,851	Wind angle: 0 dgr					
Permanentloads yg=0.9	380C1F3 / 380	12781	52394	106564	0	0	0	12,781	52,394	106,564	3410,048	1676,608	12,781	106,564	52,394						
Wind angle: 0 dgr	GW / opgw	1669	7191	14164	0	0	0	1,669	7,191	14,164	728,3695	371,0584	1,669	14,164	7,191						
	Comp. gl	3462	14265	28881	0	0	0	3,462	14,265	28,881	707,5845	356,6762	3,462	28,881	14,265						
1b	380C1F1 / 380	12774	58997	124352	0	0	0	12,774	58,997	124,352	6466,304	3067,844	12,774	124,352	58,997	1b	17287,94	8203,458	43,451	421,658	199,82
Wind, -20 dgr	380C1F2 / 380	12774	58915	124346	0	0	0	12,774	58,915	124,346	5222,532	2474,43	12,774	124,346	58,915	Wind angle: 0 dgr					
Permanent loads yg=0.9	380C1F3 / 380	12774	58813	124344	0	0	0	12,774	58,813	124,344	3979,008	1882,016	12,774	124,344	58,813						
Wind angle: 0 dgr	GW / opgw	1668	7610	15934	0	0	0	1,668	7,61	15,934	819,39	392,6043	1,668	15,934	7,61						
	Comp. gl	3461	15485	32682	0	0	0	3,461	15,485	32,682	800,709	386,5641	3,461	32,682	15,485						
3	380C1F1 / 380	15538	65149	133659	0	0	0	15,538	65,149	133,659	6950,268	3387,748	15,538	133,659	65,149	3	19385,52	9464,665	56,459	477,109	232,412
Wind+ice, -5 dgr	380C1F2 / 380	15538	64872	133536	0	0	0	15,538	64,872	133,536	5608,512	2724,624	15,538	133,536	64,872	Wind angle: 0 dgr					
Permanent loads yg=0.9	380C1F3 / 380	15538	64529	133402	0	0	0	15,538	64,529	133,402	4268,864	2064,928	15,538	133,402	64,529						
Wind angle: 0 dgr	GW / opgw	3239	12761	25380	0	0	0	3,239	12,761	25,38	1305,141	658,6833	3,239	25,38	12,761						
	Comp. gl	6606	25101	51132	0	0	0	6,606	25,101	51,132	1252,734	628,682	6,606	51,132	25,101						
4	380C1F1 / 380	15186	59156	124693	0	0	0	15,186	59,156	124,693	6484,036	3076,112	15,186	124,693	59,156	4	17562,01	8334,333	52,494	429,625	203,538
Construction/maintenance, +	380C1F2 / 380	15186	59079	124696	0	0	0	15,186	59,079	124,696	5237,232	2481,318	15,186	124,696	59,079	Wind angle: 0 dgr					
Permanent loads yg=0.9	380C1F3 / 380	15186	58981	124702	0	0	0	15,186	58,981	124,702	3990,464	1887,392	15,186	124,702	58,981						

Wind angle: 0 dgr	GW / ogw=	2271	8662	18188	0	0	0	2,271	8,662	18,188	935,2997	447,1606	2,271	18,188	8,662									
	Comp. gl	4665	17660	37346	0	0	0	4,665	17,66	37,346	914,977	442,3499	4,665	37,346	17,66									
6	180C1F1 / 180I12781		49433	106010	0	0	0	12,781	49,433	106,01	5512,52	2570,516	12,781	106,01	49,433		6	14769,9	6895,724	43,474	360,509	168,107		
Permanent, +10 dgr	180C1F2 / 180I12781		49433	106010	0	0	0	12,781	49,433	106,01	4452,42	2076,186	12,781	106,01	49,433		0							
Permanent loads wg= 1.35	180C1F3 / 180I12781		49433	106010	0	0	0	12,781	49,433	106,01	3392,32	1581,856	12,781	106,01	49,433									
	GW / ogw=	1669	6441	13813	0	0	0	1,669	6,441	13,813	710,3197	332,4904	1,669	13,813	6,441									
	Comp. gl	3462	13367	28666	0	0	0	3,462	13,367	28,666	702,317	334,6752	3,462	28,666	13,367									
1a	180C1F1 / 180I12781		51673	106197	0	0	0	12,781	51,673	106,197	5522,244	2686,996	12,781	106,197	51,673		1a	14790,08	7189,665	43,474	360,934	175,12		
Wind, 10 dgr	180C1F2 / 180I12781		51465	106111	0	0	0	12,781	51,465	106,111	4456,662	2161,53	12,781	106,111	51,465		Wind angle: 45 dgr							
Permanent loads wg=0.9	180C1F3 / 180I12781		51207	106018	0	0	0	12,781	51,207	106,018	3392,576	1638,624	12,781	106,018	51,207									
Wind angle: 45 dgr	GW / ogw=	1669	6874	13917	0	0	0	1,669	6,874	13,917	715,6678	354,757	1,669	13,917	6,874									
	Comp. gl	3462	13901	28691	0	0	0	3,462	13,901	28,691	702,9295	347,7582	3,462	28,691	13,901									
1b	180C1F1 / 180I12774		58647	124349	0	0	0	12,774	58,647	124,349	6466,148	3049,644	12,774	124,349	58,647		1b	17288,2	8157,527	43,451	421,672	198,724		
Wind, -20 dgr	180C1F2 / 180I12774		58597	124354	0	0	0	12,774	58,597	124,354	5222,868	2461,074	12,774	124,354	58,597		Wind angle: 45 dgr							
Permanent loads wg=0.9	180C1F3 / 180I12774		58535	124361	0	0	0	12,774	58,535	124,361	3979,552	1871,12	12,774	124,361	58,535									
Wind angle: 45 dgr	GW / ogw=	1668	7543	15924	0	0	0	1,668	7,543	15,924	818,8758	389,1589	1,668	15,924	7,543									
	Comp. gl	3461	15402	32684	0	0	0	3,461	15,402	32,684	800,758	384,5306	3,461	32,684	15,402									
3	180C1F1 / 180I15538		63979	133237	0	0	0	15,538	63,979	133,237	6928,324	3326,908	15,538	133,237	63,979		3	19325,67	9295,744	56,458	475,714	228,336		
Wind+Ice, -5 dgr	180C1F2 / 180I15538		63819	133203	0	0	0	15,538	63,819	133,203	5594,526	2680,398	15,538	133,203	63,819		Wind angle: 45 dgr							
Permanent loads wg=0.9	180C1F3 / 180I15538		63619	133169	0	0	0	15,538	63,619	133,169	4261,408	2035,808	15,538	133,169	63,619									
Wind angle: 45 dgr	GW / ogw=	3238	12329	25139	0	0	0	3,238	12,329	25,139	1292,748	636,4674	3,238	25,139	12,329									
	Comp. gl	6606	24590	50966	0	0	0	6,606	24,59	50,966	1248,667	616,1625	6,606	50,966	24,59									
4	180C1F1 / 180I15186		58821	124722	0	0	0	15,186	58,821	124,722	6485,544	3058,692	15,186	124,722	58,821		4	17566,62	8290,361	52,494	429,742	202,488		
Construction/maintenance, +180C1F2 / 180I15186			58773	124730	0	0	0	15,186	58,773	124,73	5238,66	2468,466	15,186	124,73	58,773		Wind angle: 45 dgr							
Permanent loads wg=0.9	180C1F3 / 180I15186		58713	124742	0	0	0	15,186	58,713	124,742	3991,744	1878,816	15,186	124,742	58,713									
Wind angle: 45 dgr	GW / ogw=	2271	8600	18190	0	0	0	2,271	8,6	18,19	935,4026	443,9724	2,271	18,19	8,6									
	Comp. gl	4665	17581	37358	0	0	0	4,665	17,581	37,358	915,271	440,4144	4,665	37,358	17,581									
1a	180C1F1 / 180I12785		79869	138866	0	0	0	12,785	79,869	138,866	7221,032	4153,188	12,785	138,866	79,869		1a	18985,21	10859,23	43,486	460,087	262,395		
Wind, 10 dgr	180C1F2 / 180I12784		76688	134567	0	0	0	12,784	76,688	134,567	5651,814	3220,896	12,784	134,567	76,688		Wind angle: 90 dgr							
Permanent loads wg=0.9	180C1F3 / 180I12784		72715	129277	0	0	0	12,784	72,715	129,277	4136,864	2326,88	12,784	129,277	72,715									
Wind angle: 90 dgr	GW / ogw=	1670	12565	21162	0	0	0	1,67	12,565	21,162	1088,235	647,4118	1,67	21,162	12,565									
	Comp. gl	3463	20558	36215	0	0	0	3,463	20,558	36,215	887,2675	510,8567	3,463	36,215	20,558									
1b	180C1F1 / 180I12774		64146	127595	0	0	0	12,774	64,146	127,595	6634,94	3335,592	12,774	127,595	64,146		1b	17696,61	8874,791	43,451	431,191	215,781		
Wind, -20 dgr	180C1F2 / 180I12774		63519	127026	0	0	0	12,774	63,519	127,026	5335,092	2667,798	12,774	127,026	63,519		Wind angle: 90 dgr							
Permanent loads wg=0.9	180C1F3 / 180I12774		62750	126371	0	0	0	12,774	62,75	126,371	4043,872	2008	12,774	126,371	62,75									
Wind angle: 90 dgr	GW / ogw=	1668	8672	16819	0	0	0	1,668	8,672	16,819	864,9003	447,2166	1,668	16,819	8,672									
	Comp. gl	3461	16694	33380	0	0	0	3,461	16,694	33,38	817,81	416,1846	3,461	33,38	16,694									
3	180C1F1 / 180I15541		84746	153890	0	0	0	15,541	84,746	153,89	8002,28	4406,792	15,541	153,89	84,746		3	22234,67	12265,38	56,471	545,03	299,844		
Wind+Ice, -5 dgr	180C1F2 / 180I15541		82341	150899	0	0	0	15,541	82,341	150,899	6337,758	3458,322	15,541	150,899	82,341		Wind angle: 90 dgr							
Permanent loads wg=0.9	180C1F3 / 180I15541		79370	147304	0	0	0	15,541	79,37	147,304	4713,728	2539,84	15,541	147,304	79,37									
Wind angle: 90 dgr	GW / ogw=	3240	19918	33574	0	0	0	3,24	19,918	33,574	1726,509	1026,726	3,24	33,574	19,918									
	Comp. gl	6608	33469	59363	0	0	0	6,608	33,469	59,363	1454,394	833,7021	6,608	59,363	33,469									
4	180C1F1 / 180I15187		63819	126890	0	0	0	15,187	63,819	126,89	6598,28	3318,588	15,187	126,89	63,819		4	17827,18	8938,963	52,495	435,758	217,919		
Construction/maintenance, +180C1F2 / 180I15186			63265	126476	0	0	0	15,186	63,265	126,476	5311,992	2657,13	15,186	126,476	63,265		Wind angle: 90 dgr							
Permanent loads wg=0.9	180C1F3 / 180I15186		62582	126005	0	0	0	15,186	62,582	126,005	4032,16	2002,624	15,186	126,005	62,582									
Wind angle: 90 dgr	GW / ogw=	2271	9546	18692	0	0	0	2,271	9,546	18,692	961,2174	492,6195	2,271	18,692	9,546									
	Comp. gl	4665	18707	37695	0	0	0	4,665	18,707	37,695	923,5275	468,0014	4,665	37,695	18,707									
1a	180C1F1 / 180I12785		82990	143126	0	0	0	12,785	82,99	143,126	7442,552	4315,48	12,785	143,126	82,99		1a	19539,44	11267,69	43,487	473,277	272,139		
Wind, 10 dgr	180C1F2 / 180I12785		79515	138386	0	0	0	12,785	79,515	138,386	5812,212	3339,63	12,785	138,386	79,515		Wind angle: -45 dgr							
Permanent loads wg=0.9	180C1F3 / 180I12784		75162	132522	0	0	0	12,784	75,162	132,522	4240,704	2405,184	12,784	132,522	75,162									
Wind angle: -45 dgr	GW / ogw=	1670	13162	22007	0	0	0	1,67	13,162	22,007	1131,688	678,1119	1,67	22,007	13,162									
	Comp. gl	3463	21310	37236	0	0	0	3,463	21,31	37,236	912,282	529,2807	3,463	37,236	21,31									
1b	180C1F1 / 180I12774		64772	128192	0	0	0	12,774	64,772	128,192	6665,984	3368,144	12,774	128,192	64,772		1b	17772,41	8956,132	43,451	432,969	217,712		
Wind, -20 dgr	180C1F2 / 180I12774		64075	127530	0	0	0	12,774	64,075	127,53	5356,26	2691,15	12,774	127,53	64,075		Wind angle: -45 dgr							
Permanent loads wg=0.9	180C1F3 / 180I12774		63221	126766	0	0	0	12,774	63,221	126,766	4056,512	2023,072	12,774	126,766	63,221									
Wind angle: -45 dgr	GW / ogw=	1668	8804	16969	0	0	0	1,668	8,804	16,969	872,6139	454,0046	1,668	16,969	8,804									
	Comp. gl	3461	16840	33512	0	0	0	3,461	16,84	33,512	821,044	419,7616	3,461	33,512	16,84									
3	180C1F1 / 180I15542		87128	156909	0	0	0	15,542	87,128	156,909	8159,268	4530,656	15,542	156,909	87,128		3	22657,58	12603,71	56,472	555,174	308,003		
Wind+Ice, -5 dgr	180C1F2 / 180I15541		84477	153553	0	0	0	15,541	84,477	153,553	6449,226	3548,034	15,541	153,553	84,477		Wind angle: -45 dgr							
Permanent loads wg=0.9	180C1F3 / 180I15541		81195	149498	0	0	0	15,541	81,195	149,498	4783,936	2598,24	15,541	149,498	81,195									
Wind angle: -45 dgr	GW / ogw=	3240	20730	34631	0	0	0	3,24	20,73	34,631	1780,865	1068,482	3,24	34,631	20,73									
	Comp. gl	6608	34473	60583	0	0	0	6,608	34,473	60,583	1484,284	858,3001	6,608	60,583	34,473									
4	180C1F1 / 180I15187		64373	127328	0	0	0	15,187	64,373	127,328	6621,056	3347,396	15,187	127,328	64,373		4	17881,16	9010,258	52,496	437,018	219,611		
Construction/maintenance, +180C1F2 / 180I15187			63757	126842	0	0	0	15,187	63,757	126,842	5327,364	2677,794	15,187	126,842	63,757		Wind angle: -45 dgr							
Permanent loads wg=0.9	180C1F3 / 180I15186		63001	126289	0	0	0	15,186	63,001	126,289	4041,248	2016,032	15,186	126,289	63,001									
Wind angle: -45 dgr	GW / ogw=	2271	9652	18786	0	0	0	2,271	9,652	18,786	966,0513	498,0704	2,271	18,786	9,652									
	Comp. gl	4665	18828	37773	0	0	0	4,665	18,828	37,773	925,4385	470,9659	4,665	37,773	18,828									

W2H400A 08-AN2

Hoogte mast		52 m		
Hoogte onderste stroomdraad (F3)		26 m		
		Hoogte	Excentriciteit ophanging t.o.v. hart mast	
Bliksemdraad = GW / C H_{mast} -	0,576 m =	51,424 m	0,76 m	
1e traverse - 380C1F1 F2 +	10 m =	52 m	0 m	
2e traverse - 380C1F2 F3 +	10 m =	42 m	0 m	
3e traverse - 380C1F3		32 m	0 m	
Passieve lijn = Comp C. F3 -	7,5 m =	24,5 m	2,075 m	

Uit mast			Uit lijnen				
ULS (incl bel factoren)			SLS				
N	V	M	Nmin	Nmax	Vmax	Mlangs;ma	Mdwars;max
[kN]	[kN]	[kNm]	[kN]	[kN]	[kN]	[kNm]	[kNm]
792	127	3678	93	161	667	7207	27769

			Belastingen uit lijnen					Belasting uit mast		
			M_{langs}	M_{dwars}	N	V_{langs}	V_{dwars}	N	V	M
SLS	0 deg	1a	776	**15961**	93	32	**382**	660	85	2452
		1b	869	17264	**93**	35	414	660	85	2452
		3	2107	24448	161	86	589	660	85	2452
		4	944	17009	107	39	408	660	85	2452
	45 deg	1a	**-5383**	20583	93	**-109**	488	660	85	2452
		1b	630	17760	93	30	425	660	85	2452
		3	918	26127	161	59	627	660	85	2452
		4	787	17469	107	35	419	660	85	2452
	90 deg	1a	1022	24944	93	42	593	660	85	2452
		1b	878	18240	93	36	437	660	85	2452
		3	2150	**27769**	**161**	88	**667**	660	85	2452
		4	949	17918	107	39	429	660	85	2452
	-45 deg	1a	**7207**	20824	93	**184**	498	660	85	2452
		1b	1119	17787	93	41	426	660	85	2452
		3	3349	26262	161	115	633	660	85	2452
		4	1108	17493	107	42	420	660	85	2452

regel				Totaal							M langs max	M dwars max	N max	V langs max	V dwars max	M tot max	N min
			Loadcase	M_{langs}	M_{dwars}	N	V_{langs}	V_{dwars}	Totaal moment								
1	Perm load 1,2	0 deg	1a	3228	18413	753	116	467	18694,17	1							
2	Perm load 1,2	0 deg	1b	3321	19716	753	120	499	19993,94	2							x
3	Perm load 1,2	0 deg	3	4559	26900	821	171	674	27283,42	3							
4	Perm load 1,2	0 deg	4	3396	19461	767	123	493	19754,83	4							
5										5							
6	Perm load 1,2	45 deg	1a	7835	23035	753	194	573	24330,7	6							
7	Perm load 1,2	45 deg	1b	3082	20212	753	115	510	20446,03	7							
8	Perm load 1,2	45 deg	3	3370	28579	821	144	712	28777,48	8							
9	Perm load 1,2	45 deg	4	3239	19921	767	120	503	20182,72	9							
10										10							
11	Perm load 1,2	90 deg	1a	3474	27396	753	126	677	27615,3	11							
12	Perm load 1,2	90 deg	1b	3330	20692	753	120	522	20957,82	12							
13	Perm load 1,2	90 deg	3	4602	30221	821	172	751	30569,52	13		x	x		x	x	
14	Perm load 1,2	90 deg	4 Construct	3401	20370	767	123	514	20652,33	14							
15										15							
16	Perm load 1,2	-45 deg	1a	8941	23276	753	269	583	24933,77	16	x			x			
17	Perm load 1,2	-45 deg	1b	2853	20239	753	126	511	20438,81	17							
18	Perm load 1,2	-45 deg	3	5083	28714	821	200	717	29160,05	18							
19	Perm load 1,2	-45 deg	4	2842	19945	767	127	504	20146,52	19							
				8941	30221	821	269	751	30570								
						753											

samenvatting

	Mast	Bijlage		Wind	Loadcase	M_{langs}	M_{dwars}	N	V_{langs}	V_{dwars}
2	W2H400A+	08-AN2	Perm load :	0 deg	1b	3321	19716	753	120	499
13	W2H400A+	08-AN2	Perm load :	90 deg	3	4602	30221	821	172	751
16	W2H400A+	08-AN2	Perm load :	-45 deg	1a	8941	23276	753	269	583
2	W2H400A+	08-AN2	Perm load :	0 deg	1b	3321	19716	753	120	499
	W2H400A+	08-AN2	#N/B	#N/B	#N/B	#N/B	#N/B	#N/B	#N/B	#N/B
	W2H400A+	08-AN2	#N/B	#N/B	#N/B	#N/B	#N/B	#N/B	#N/B	#N/B

W2H400A+5 TOWER APPENDIX: AN2

Loadcases for tower defliction analyses (Servicability limit state)

Loadcase according to 50341-3-15

			AHEAD			BACK		Totaal			Belastingen op mastvoet, per lijn				
	Attachment point	[N]	[N]	[N]	[N]	[N]	[N]	Vert [kN]	Dwars [kN]	Langs [kN]	M_{langs}	M_{dwars}	N	V_{langs}	V_{dwars}
1a	380C1F1 / 380C2F1	14202	58927	117336	14202	58927	-117336	28,404	117,854	0	0	6128,408	28,404	0	117,854
Wind, 10 dgr	380C1F2 / 380C2F2	14202	58429	116970	14202	58429	-116970	28,404	116,858	0	0	4908,036	28,404	0	116,858
Permanent loa	380C1F3 / 380C2F3	14202	57816	116556	14202	57816	-116556	28,404	115,632	0	0	3700,224	28,404	0	115,632
Wind angle: 0 c	GW / opgw	1855	8041	15633	1855	8041	-15633	3,71	16,082	0	0	829,8204	3,71	0	16,082
	Comp. gl	3847	15792	31671				3,847	15,792	31,671	775,9395	394,8865	3,847	31,671	15,792
1b	380C1F1 / 380C2F1	14194	63543	134464	14194	63543	-134464	28,388	127,086	0	0	6608,472	28,388	0	127,086
Wind, -20 dgr	380C1F2 / 380C2F2	14194	63480	134467	14194	63480	-134467	28,388	126,96	0	0	5332,32	28,388	0	126,96
Permanent loa	380C1F3 / 380C2F3	14194	63399	134474	14194	63399	-134474	28,388	126,798	0	0	4057,536	28,388	0	126,798
Wind angle: 0 c	GW / opgw	1854	8213	17290	1854	8213	-17290	3,708	16,426	0	0	847,5087	3,708	0	16,426
	Comp. gl	3845	16749	35479				3,845	16,749	35,479	869,2355	418,3289	3,845	35,479	16,749
3	380C1F1 / 380C2F1	22419	84618	176416	22419	84618	-176416	44,838	169,236	0	0	8800,272	44,838	0	169,236
Wind+ice, -5 dg	380C1F2 / 380C2F2	22419	84425	176396	22419	84425	-176396	44,838	168,85	0	0	7091,7	44,838	0	168,85
Permanent loa	380C1F3 / 380C2F3	22419	84184	176381	22419	84184	-176381	44,838	168,368	0	0	5387,776	44,838	0	168,368
Wind angle: 0 c	GW / opgw	6530	20638	42602	6530	20638	-42602	13,06	41,276	0	0	2132,503	13,06	0	41,276
	Comp. gl	13213	41150	85996				13,213	41,15	85,996	2106,902	1035,592	13,213	85,996	41,15
4	380C1F1 / 380C2F1	16206	62101	131369	16206	62101	-131369	32,412	124,202	0	0	6458,504	32,412	0	124,202
Construction/m	380C1F2 / 380C2F2	16206	62039	131376	16206	62039	-131376	32,412	124,078	0	0	5211,276	32,412	0	124,078
Permanent loac	380C1F3 / 380C2F3	16206	61960	131388	16206	61960	-131388	32,412	123,92	0	0	3965,44	32,412	0	123,92
Wind angle: 0 c	GW / opgw	2356	8891	18744	2356	8891	-18744	4,712	17,782	0	0	918,0027	4,712	0	17,782
	Comp. gl	4850	18179	38547				4,85	18,179	38,547	944,4015	455,4493	4,85	38,547	18,179
1a	380C1F1 / 380C2F1	14202	56851	116000	14208	98189	-165882	28,41	155,04	-49,882	-2593,86	8062,08	28,41	-49,882	155,04
Wind, 10 dgr	380C1F2 / 380C2F2	14202	56574	115867	14208	93717	-159769	28,41	150,291	-43,902	-1843,88	6312,222	28,41	-43,902	150,291
Permanent loac	380C1F3 / 380C2F3	14202	56231	115721	14207	88077	-152129	28,409	144,308	-36,408	-1165,06	4617,856	28,409	-36,408	144,308
Wind angle: 45	GW / opgw	1855	7613	15270	1856	15816	-25944	3,711	23,429	-10,674	-548,9	1207,633	3,711	-10,674	23,429
	Comp. gl	3847	15304	31383				3,847	15,304	31,383	768,8835	382,9305	3,847	31,383	15,304
1b	380C1F1 / 380C2F1	14194	63266	134493	14195	67811	-136493	28,389	131,077	-2	-104	6816,004	28,389	-2	131,077
Wind, -20 dgr	380C1F2 / 380C2F2	14194	63227	134500	14195	67309	-136112	28,389	130,536	-1,612	-67,704	5482,512	28,389	-1,612	130,536
Permanent loac	380C1F3 / 380C2F3	14194	63177	134510	14195	66693	-135679	28,389	129,87	-1,169	-37,408	4155,84	28,389	-1,169	129,87
Wind angle: 45	GW / opgw	1854	8160	17289	1854	9080	-17879	3,708	17,24	-0,59	-30,3402	889,3678	3,708	-0,59	17,24
	Comp. gl	3845	16682	35488				3,845	16,682	35,488	869,456	416,6874	3,845	35,488	16,682
3	380C1F1 / 380C2F1	22419	83790	176382	22421	98433	-186136	44,84	182,223	-9,754	-507,208	9475,596	44,84	-9,754	182,223
Wind+ice, -5 dg	380C1F2 / 380C2F2	22419	83673	176389	22421	96774	-184519	44,84	180,447	-8,13	-341,46	7578,774	44,84	-8,13	180,447
Permanent loac	380C1F3 / 380C2F3	22419	83526	176403	22420	94735	-182634	44,839	178,261	-6,231	-199,392	5704,352	44,839	-6,231	178,261
Wind angle: 45	GW / opgw	6530	20371	42601	6531	24969	-45353	13,061	45,34	-2,752	-141,519	2341,491	13,061	-2,752	45,34
	Comp. gl	13213	40808	86040				13,213	40,808	86,04	2107,98	1027,213	13,213	86,04	40,808
4	380C1F1 / 380C2F1	16206	61831	131414	16207	66084	-132786	32,413	127,915	-1,372	-71,344	6651,58	32,413	-1,372	127,915
Construction/m	380C1F2 / 380C2F2	16206	61792	131422	16207	65626	-132496	32,413	127,418	-1,074	-45,108	5351,556	32,413	-1,074	127,418
Permanent loac	380C1F3 / 380C2F3	16206	61743	131435	16207	65059	-132172	32,413	126,802	-0,737	-23,584	4057,664	32,413	-0,737	126,802
Wind angle: 45	GW / opgw	2356	8841	18749	2356	9651	-19102	4,712	18,492	-0,353	-18,1527	954,5137	4,712	-0,353	18,492
	Comp. gl	4850	18115	38561				4,85	18,115	38,561	944,7445	453,8813	4,85	38,561	18,115
1a	380C1F1 / 380C2F1	14208	94173	160390	14208	94173	-160390	28,416	188,346	0	0	9793,992	28,416	0	188,346
Wind, 10 dgr	380C1F2 / 380C2F2	14207	90060	154804	14207	90060	-154804	28,414	180,12	0	0	7565,04	28,414	0	180,12
Permanent loac	380C1F3 / 380C2F3	14206	84889	147858	14206	84889	-147858	28,412	169,778	0	0	5432,896	28,412	0	169,778
Wind angle: 90	GW / opgw	1856	15062	24884	1856	15062	-24884	3,712	30,124	0	0	1551,918	3,712	0	30,124
	Comp. gl	3848	24165	41727				3,848	24,165	41,727	1022,312	600,0271	3,848	41,727	24,165
1b	380C1F1 / 380C2F1	14195	67360	136149	14195	67360	-136149	28,39	134,72	0	0	7005,44	28,39	0	134,72
Wind, -20 dgr	380C1F2 / 380C2F2	14195	66908	135825	14195	66908	-135825	28,39	133,816	0	0	5620,272	28,39	0	133,816
Permanent loac	380C1F3 / 380C2F3	14195	66351	135458	14195	66351	-135458	28,39	132,702	0	0	4246,464	28,39	0	132,702
Wind angle: 90	GW / opgw	1854	8986	17788	1854	8986	-17788	3,708	17,972	0	0	927,0102	3,708	0	17,972
	Comp. gl	3846	17650	35833				3,846	17,65	35,833	877,9085	440,4055	3,846	35,833	17,65
3	380C1F1 / 380C2F1	22421	96941	184679	22421	96941	-184679	44,842	193,882	0	0	10081,86	44,842	0	193,882
Wind+ice, -5 dg	380C1F2 / 380C2F2	22420	95445	183276	22420	95445	-183276	44,84	190,89	0	0	8017,38	44,84	0	190,89
Permanent loac	380C1F3 / 380C2F3	22420	93607	181648	22420	93607	-181648	44,84	187,214	0	0	5990,848	44,84	0	187,214
Wind angle: 90	GW / opgw	6531	24509	44940	6531	24509	-44940	13,062	49,018	0	0	2530,629	13,062	0	49,018
	Comp. gl	13214	45753	87767				13,214	45,753	87,767	2150,292	1148,368	13,214	87,767	45,753
4	380C1F1 / 380C2F1	16207	65672	132524	16207	65672	-132524	32,414	131,344	0	0	6829,888	32,414	0	131,344
Construction/m	380C1F2 / 380C2F2	16207	65257	132281	16207	65257	-132281	32,414	130,514	0	0	5481,588	32,414	0	130,514
Permanent loac	380C1F3 / 380C2F3	16206	64744	132009	16206	64744	-132009	32,412	129,488	0	0	4143,616	32,412	0	129,488
Wind angle: 90	GW / opgw	2356	9570	19041	2356	9570	-19041	4,712	19,14	0	0	987,8365	4,712	0	19,14
	Comp. gl	4850	18997	38722				4,85	18,997	38,722	948,689	475,4903	4,85	38,722	18,997
1a	380C1F1 / 380C2F1	14208	98189	165882	14202	56851	-116000	28,41	155,04	49,882	2593,864	8062,08	28,41	49,882	155,04
Wind, 10 dgr	380C1F2 / 380C2F2	14208	93717	159769	14202	56574	-115867	28,41	150,291	43,902	1843,884	6312,222	28,41	43,902	150,291
Permanent loac	380C1F3 / 380C2F3	14207	88077	152129	14202	56231	-115721	28,409	144,308	36,408	1165,056	4617,856	28,409	36,408	144,308
Wind angle: -4	GW / opgw	1856	15816	25944	1855	7613	-15270	3,711	23,429	10,674	548,8998	1207,633	3,711	10,674	23,429
	Comp. gl	3849	25141	43062				3,849	25,141	43,062	1055,019	623,9412	3,849	43,062	25,141
1b	380C1F1 / 380C2F1	14195	67811	136493	14194	63266	-134493	28,389	131,077	2	104	6816,004	28,389	2	131,077
Wind, -20 dgr	380C1F2 / 380C2F2	14195	67309	136112	14194	63227	-134500	28,389	130,536	1,612	67,704	5482,512	28,389	1,612	130,536
Permanent loac	380C1F3 / 380C2F3	14195	66693	135679	14194	63177	-134510	28,389	129,87	1,169	37,408	4155,84	28,389	1,169	129,87
Wind angle: -4	GW / opgw	1854	9080	17879	1854	8160	-17289	3,708	17,24	0,59	30,34016	889,3678	3,708	0,59	17,24
	Comp. gl	3846	17755	35908				3,846	17,755	35,908	879,746	442,978	3,846	35,908	17,755
3	380C1F1 / 380C2F1	22421	98433	186136	22419	83790	-176382	44,84	182,223	9,754	507,208	9475,596	44,84	9,754	182,223
Wind+ice, -5 dg	380C1F2 / 380C2F2	22421	96774	184519	22419	83673	-176389	44,84	180,447	8,13	341,46	7578,774	44,84	8,13	180,447
Permanent loac	380C1F3 / 380C2F3	22420	94735	182634	22419	83526	-176403	44,839	178,261	6,231	199,392	5704,352	44,839	6,231	178,261
Wind angle: -4	GW / opgw	6531	24969	45353	6530	20371	-42601	13,061	45,34	2,752	141,5188	2341,491	13,061	2,752	45,34
	Comp. gl	13214	46287	88135				13,214	46,287	88,135	2159,308	1161,451	13,214	88,135	46,287
4	380C1F1 / 380C2F1	16207	66084	132786	16206	61831	-131414	32,413	127,915	1,372	71,344	6651,58	32,413	1,372	127,915
Construction/m	380C1F2 / 380C2F2	16207	65626	132496	16206	61792	-131422	32,413	127,418	1,074	45,108	5351,556	32,413	1,074	127,418
Permanent loac	380C1F3 / 380C2F3	16207	65059	132172	16206	61743	-131435	32,413	126,802	0,737	23,584	4057,664	32,413	0,737	126,802
Wind angle: -4	GW / opgw	2356	9651	19102	2356	8841	-18749	4,712	18,492	0,353	18,15267	954,5137	4,712	0,353	18,492
	Comp. gl	4850	19090	38769				4,85	19,09	38,769	949,8405	477,7688	4,85	38,769	19,09

Belasting op mastvoet, belastinggeval

	M_{langs}	M_{dwars}	N	V_{langs}	V_{dwars}
1a	775,9395	15961,37	92,769	31,671	382,218
Wind angle: 0 dgr					
1b	869,2355	17264,17	92,717	35,479	414,019
Wind angle: 0 dgr					
3	2106,902	24447,84	160,787	85,996	588,88
Wind angle: 0 dgr					
4	944,4015	17008,67	106,798	38,547	408,161
Wind angle: 0 dgr					
1a	-5382,82	20582,72	92,787	-109,483	488,372
Wind angle: 45 dgr					
1b	630,0038	17760,41	92,72	30,117	425,405
Wind angle: 45 dgr					
3	918,4012	26127,43	160,793	59,173	627,079
Wind angle: 45 dgr					
4	786,5558	17469,19	106,801	35,025	418,742
Wind angle: 45 dgr					
1a	1022,312	24943,87	92,802	41,727	592,533
Wind angle: 90 dgr					
1b	877,9085	18239,59	92,724	35,833	436,86
Wind angle: 90 dgr					
3	2150,292	27769,09	160,798	87,767	666,757
Wind angle: 90 dgr					
4	948,689	17918,42	106,802	38,722	429,483
Wind angle: 90 dgr					
1a	7206,723	20823,73	92,789	183,928	498,209
Wind angle: -45 dgr					
1b	1119,198	17786,7	92,721	41,279	426,478
Wind angle: -45 dgr					
3	3348,886	26261,66	160,794	115,002	632,558
Wind angle: -45 dgr					
4	1108,029	17493,08	106,801	42,305	419,717
Wind angle: -45 dgr					

W2S350+5 | 09-I

Hoogte mast		Ber & bijlage		51	m			
Hoogte onderste stroomdraad (F3)				28	m			
				Hoogte		Excentriciteit ophanging t.o.v. hart mast		
Bliksemdraad = GW / OPGW	H_{mast} -	0,7	m =	50,3	m	-1,458	m	
1e traverse - 380C1F1	F2 +	8,5	m =	45	m	4,41	m	
2e traverse - 380C1F2	F3 +	8,5	m =	36,5	m	4,41	m	
3e traverse - 380C1F3				28	m	4,41	m	
Passieve lijn = Comp C.	F3 -	4	m =	24	m	-1,773	m	

Uit mast (excl belastingsfactoren) N [kN]	V [kN]	M [kNm]	Uit lijnen (incl belastingsfactoren) Nmin [kN]	Nmax [kN]	Vmax [kN]	Mlangs;max [kNm]	Mdwars;max [kNm]
318	81	2034	76	203	246	1513	9398

			Belastingen uit lijnen M_{langs}	M_{dwars}	N	V_{langs}	V_{dwars}	Belasting uit mast N	V	M
Perm load 1,2	0 deg	1a	0	1957	101	0	44	318	81	2034
		1b	0	2235	101	0	52	318	15	381
		3	0	3345	203	0	77	318	23	572
		4	0	2320	124	0	52	318	15	381
		6	0	2140	114	0	48			
	45 deg	1a	-1256	5516	101	-34	141	318	81	2034
		1b	-73	2889	101	-2	69	318	15	381
		3	-270	5383	203	-7	133	318	23	572
		4	-54	2970	124	-1	70	318	15	381
	90 deg	1a	0	**9398**	101	0	**246**	318	81	2034
		1b	0	3579	101	0	88	318	15	381
		3	0	7544	**203**	0	192	318	23	572
		4	0	3647	124	0	88	318	15	381
	-45 deg	1a	1256	5516	101	34	141	318	81	2034
		1b	73	2889	101	2	69	318	15	381
		3	270	5383	203	7	133	318	23	572
		4	54	2970	124	1	70	318	15	381
Perm load 0,9	0 deg	1a	0	1549	76	0	35	239	81	2034
		1b	0	1818	**76**	0	43	239	15	381
		3	0	2995	178	0	70	239	23	572
		4	0	1931	99	0	44	239	15	381
		6	0	**1537**	76	0	**35**			
	45 deg	1a	**-1513**	5221	76	**-41**	135	239	81	2034
		1b	-106	2480	76	-3	61	239	15	381
		3	-322	5047	178	-9	126	239	23	572
		4	-74	2585	99	-2	62	239	15	381
	90 deg	1a	0	9193	76	0	243	239	81	2034
		1b	0	3192	76	0	80	239	15	381
		3	0	7240	178	0	186	239	23	572
		4	0	3276	99	0	80	239	15	381
	-45 deg	1a	**1513**	5221	76	**41**	135	239	81	2034
		1b	106	2480	76	3	61	239	15	381
		3	322	5047	178	9	126	239	23	572
		4	74	2585	99	2	62	239	15	381

regel			Loadcase	Totaal M_{langs}	M_{dwars}	N	V_{langs}	V_{dwars}	Totaal moment							
1	Perm load 1,2	0 deg	1a	2034	1957	419	81	44	2822,514	1						
2	Perm load 1,2	0 deg	1b	381	2235	419	15	52	2267,616	2						
3	Perm load 1,2	0 deg	3	572	3345	521	23	77	3394,034	3						
4	Perm load 1,2	0 deg	4	381	2320	442	15	52	2351,234	4						
5	Perm load 1,2	0 deg	6							5						
6										6						
7	Perm load 1,2	45 deg	1a	2694	6954	419	91	198	7457,472	7						
8	Perm load 1,2	45 deg	1b	342	3159	419	13	80	3177,613	8						
9	Perm load 1,2	45 deg	3	674	5788	521	23	149	5827,148	9						
10	Perm load 1,2	45 deg	4	324	3240	442	12	80	3255,716	10						
11										11						
12	Perm load 1,2	90 deg	1a	0	11432	419	0	327	11432,29	12		x			x	x
13	Perm load 1,2	90 deg	1b	0	3960	419	0	103	3960,167	13						
14	Perm load 1,2	90 deg	3	0	8116	521	0	215	8116,046	14			x			
15	Perm load 1,2	90 deg	4 Construc	0	4028	442	0	103	4028,124	15						
16										16						
17	Perm load 1,2	-45 deg	1a	2694	6954	419	91	198	7457,472	17						
18	Perm load 1,2	-45 deg	1b	342	3159	419	13	80	3177,613	18						
19	Perm load 1,2	-45 deg	3	674	5788	521	23	149	5827,148	19						
20	Perm load 1,2	-45 deg	4	324	3240	442	12	80	3255,716	20						
21										21						
22	Perm load 0,9	0 deg	1a	2034	1549	315	81	35	2556,748	22						
23	Perm load 0,9	0 deg	1b	381	1818	315	15	43	1857,127	23						
24	Perm load 0,9	0 deg	3	572	2995	416	23	70	3049,397	24						
25	Perm load 0,9	0 deg	4	381	1931	337	15	44	1968,167	25						
26	Perm load 0,9	0 deg	6							26						
27										27						
28	Perm load 0,9	45 deg	1a	2951	6660	315	98	192	7284,13	28	x			x		
29	Perm load 0,9	45 deg	1b	376	2750	315	14	71	2775,416	29						
30	Perm load 0,9	45 deg	3	726	5452	416	25	142	5499,756	30						
31	Perm load 0,9	45 deg	4 Construc	343	2855	337	13	72	2875,662	31						
32										32						
33	Perm load 0,9	90 deg	1a	0	11227	315	0	324	11227,44	33						
34	Perm load 0,9	90 deg	1b	0	3573	315	0	95	3573,294	34						
35	Perm load 0,9	90 deg	3	0	7812	416	0	209	7811,758	35						
36	Perm load 0,9	90 deg	4	0	3657	337	0	96	3657,101	36						
37										37						
38	Perm load 0,9	-45 deg	1a	2951	6660	315	98	192	7284,13	38	x			x		
39	Perm load 0,9	-45 deg	1b	376	2750	315	14	71	2775,416	39						
40	Perm load 0,9	-45 deg	3	726	5452	416	25	142	5499,756	40						
41	Perm load 0,9	-45 deg	4	343	2855	337	13	72	2875,662	41						
			Max	2951	11432	521	98	327	11432							

samenvatting

	Mast	Bijlage		Wind	Loadcase	M_{langs}	M_{dwars}	N	V_{langs}	V_{dwars}
12	W2S350+5	09-I	Perm load	90 deg	1a	0	11432	419	0	327
14	W2S350+5	09-I	Perm load	90 deg	3	0	8116	521	0	215
28	W2S350+5	09-I	Perm load	45 deg	1a	2951	6660	315	98	192

W2S350+5 APPENDIX: I

Loadcases for tower strength (ultimate limit state)

Loadcase according to

50341-3-15

	Attachment point	[N]	AHEAD [N]	[N]	[N]	BACK [N]	[N]	Totaal Vert [kN]	Dwars [kN]	Langs [kN]	Belastingen op mastvoet, per lijn M_{langs}	M_{dwars}	N	V_{langs}	V_{dwars}	Belasting op mastvoet, belastinggeval	M_{langs}	M_{dwars}	N	V_{langs}	V_{dwars}
1a	1a 380C1F1 / 380C2F1	14907	6455	146657	14907	6455	-146657	29,814	12,91	0	0	712,4297	29,814	0	12,91	1a	0	1956,893	101,412	0	43,91
Wind, 10 dgr	Wind, 10 dgr 380C1F2/ 380C2F2	14907	6451	146657	14907	6451	-146657	29,814	12,902	0	0	602,4027	29,814	0	12,902	Wind angle: 0 dgr					
Permanent loads yg=	Permanent loads yg= 1.2380C1F3 / 380C2F3	14907	6446	146657	14907	6446	-146657	29,814	12,892	0	0	492,4557	29,814	0	12,892						
Wind angle: 0 dgr	Wind angle: 0 dgrGW / opgw	1947	849	19242	1947	849	-19242	3,894	1,698	0	0	79,73195	3,894	0	1,698						
	Comp. gl	4038	1754	39867	4038	1754	-39867	8,076	3,508	0	0	69,87325	8,076	0	3,508						
1b	1b 380C1F1 / 380C2F1	14900	7606	173968	14900	7606	-173968	29,8	15,212	0	0	815,958	29,8	0	15,212	1b	0	2235,315	101,364	0	51,62
Wind, -20 dgr	Wind, -20 dgr 380C1F2/ 380C2F2	14900	7605	173968	14900	7605	-173968	29,8	15,21	0	0	686,583	29,8	0	15,21	Wind angle: 0 dgr					
Permanent loads yg=	Permanent loads yg= 1.2380C1F3 / 380C2F3	14900	7604	173968	14900	7604	-173968	29,8	15,208	0	0	557,242	29,8	0	15,208						
Wind angle: 0 dgr	Wind angle: 0 dgrGW / opgw	1946	984	22489	1946	984	-22489	3,892	1,968	0	0	93,31586	3,892	0	1,968						
	Comp. gl	4036	2011	46005	4036	2011	-46005	8,072	4,022	0	0	82,21634	8,072	0	4,022						
3	3 380C1F1 / 380C2F1	25691	10256	234233	25691	10256	-234233	51,382	20,512	0	0	1149,635	51,382	0	20,512	3	0	3345,476	202,976	0	76,846
Wind+ice, -5 dgr	Wind+ice, -5 dgr 380C1F2/ 380C2F2	25691	10254	234233	25691	10254	-234233	51,382	20,508	0	0	975,1366	51,382	0	20,508	Wind angle: 0 dgr					
Permanent loads yg=	Permanent loads yg= 1.2380C1F3 / 380C2F3	25691	10251	234233	25691	10251	-234233	51,382	20,502	0	0	800,6506	51,382	0	20,502						
Wind angle: 0 dgr	Wind angle: 0 dgrGW / opgw	8083	2543	58024	8083	2543	-58024	16,166	5,086	0	0	232,2558	16,166	0	5,086						
	Comp. gl	16332	5119	116933	16332	5119	-116933	32,664	10,238	0	0	187,7987	32,664	0	10,238						
4	4 380C1F1 / 380C2F1	17913	7550	172685	17913	7550	-172685	35,826	15,1	0	0	837,4927	35,826	0	15,1	4	0	2320,098	123,96	0	52,048
Construction/mainter	Construction/maintenance, 5 dgr 380C1F2/ 380C2F2	17913	7549	172685	17913	7549	-172685	35,826	15,098	0	0	709,0697	35,826	0	15,098	Wind angle: 0 dgr					
Permanent loads yg=	Permanent loads yg= 1.2380C1F3 / 380C2F3	17913	7548	172685	17913	7548	-172685	35,826	15,096	0	0	580,6807	35,826	0	15,096						
Wind angle: 0 dgr	Wind angle: 0 dgrGW / opgw	2699	1108	25331	2699	1108	-25331	5,398	2,216	0	0	103,5945	5,398	0	2,216						
	Comp. gl	5542	2269	51910	5542	2269	-51910	11,084	4,538	0	0	89,26007	11,084	0	4,538						
6	6 380C1F1 / 380C2F1	16772	7005	160442	16772	7005	-160442	33,544	14,01	0	0	778,379	33,544	0	14,01	6	0	2139,724	114,098	0	47,69
Permanent, +10 dgr	Permanent, 10 dgr 380C1F2/ 380C2F2	16772	7005	160442	16772	7005	-160442	33,544	14,01	0	0	659,294	33,544	0	14,01	0					
Permanent loads yg=	Permanent loads yg= 1.35380C1F3 / 380C2F3	16772	7005	160442	16772	7005	-160442	33,544	14,01	0	0	540,209	33,544	0	14,01						
	GW / opgw	2190	922	21111	2190	922	-21111	4,38	1,844	0	0	86,36716	4,38	0	1,844						
	Comp. gl	4543	1908	43708	4543	1908	-43708	9,086	3,816	0	0	75,47452	9,086	0	3,816						
1a	1a 380C1F1 / 380C2F1	14910	20279	178767	14912	23138	-189670	29,822	43,417	-10,903	-490,635	2085,28	29,822	-10,903	43,417	1a	-1255,65	5515,646	101,435	-33,941	140,739
Wind, 10 dgr	Wind, 10 dgr 380C1F2/ 380C2F2	14910	19149	174662	14911	21776	-184396	29,821	40,925	-9,734	-355,291	1625,273	29,821	-9,734	40,925	Wind angle: 45 dgr					
Permanent loads yg=	Permanent loads yg= 1.2380C1F3 / 380C2F3	14909	17734	169727	14910	20067	-177988	29,819	37,801	-8,261	-231,308	1189,93	29,819	-8,261	37,801						
Wind angle: 45 dgr	Wind angle: 45 dgrGW / opgw	1947	3334	26317	1948	3847	-28499	3,895	7,181	-2,182	-109,755	355,5254	3,895	-2,182	7,181						
	Comp. gl	4039	5336	48171	4039	6079	-51032	8,078	11,415	-2,861	-68,664	259,6377	8,078	-2,861	11,415						
1b	1b 380C1F1 / 380C2F1	14900	10153	175454	14900	10657	-176091	29,8	20,81	-0,637	-28,665	1067,868	29,8	-0,637	20,81	1b	-72,5763	2889,455	101,364	-1,939	69,434
Wind, -20 dgr	Wind, -20 dgr 380C1F2/ 380C2F2	14900	9954	175230	14900	10417	-175775	29,8	20,371	-0,545	-19,8925	874,9595	29,8	-0,545	20,371	Wind angle: 45 dgr					
Permanent loads yg=	Permanent loads yg= 1.2380C1F3 / 380C2F3	14900	9703	174974	14900	10116	-175411	29,8	19,819	-0,437	-12,236	686,35	29,8	-0,437	19,819						
Wind angle: 45 dgr	Wind angle: 45 dgrGW / opgw	1946	1435	22861	1946	1525	-23017	3,892	2,96	-0,156	-7,8468	143,2135	3,892	-0,156	2,96						
	Comp. gl	4036	2672	46388	4036	2802	-46552	8,072	5,474	-0,164	-3,936	117,0643	8,072	-0,164	5,474						
3	3 380C1F1 / 380C2F1	25692	17440	239845	25692	18873	-242182	51,384	36,313	-2,337	-105,165	1860,688	51,384	-2,337	36,313	3	-269,798	5383,492	202,984	-7,223	132,652
Wind+ice, -5 dgr	Wind+ice, -5 dgr 380C1F2/ 380C2F2	25692	16873	239019	25692	18190	-241025	51,384	35,063	-2,006	-73,219	1506,403	51,384	-2,006	35,063	Wind angle: 45 dgr					
Permanent loads yg=	Permanent loads yg= 1.2380C1F3 / 380C2F3	25691	16162	238064	25692	17334	-239686	51,383	33,496	-1,622	-45,416	1164,487	51,383	-1,622	33,496						
Wind angle: 45 dgr	Wind angle: 45 dgrGW / opgw	8084	4842	59459	8084	5298	-60060	16,168	10,14	-0,601	-30,2303	486,4691	16,168	-0,601	10,14						
	Comp. gl	16332	8489	118455	16333	9151	-119112	32,665	17,64	-0,657	-15,768	365,445	32,665	-0,657	17,64						
4	4 380C1F1 / 380C2F1	17913	10083	173811	17914	10581	-174301	35,827	20,664	-0,49	-22,05	1087,877	35,827	-0,49	20,664	4	-54,1587	2969,898	123,962	-1,446	69,745
Construction/mainter	Construction/maintenance, 5 dgr 380C1F2/ 380C2F2	17913	9886	173639	17914	10344	-174057	35,827	20,23	-0,418	-15,257	896,3921	35,827	-0,418	20,23	Wind angle: 45 dgr					
Permanent loads yg=	Permanent loads yg= 1.2380C1F3 / 380C2F3	17913	9637	173443	17913	10046	-173777	35,826	19,683	-0,334	-9,352	709,1167	35,826	-0,334	19,683						
Wind angle: 45 dgr	Wind angle: 45 dgrGW / opgw	2699	1553	25562	2699	1641	-25661	5,398	3,194	-0,099	-4,9797	152,7879	5,398	-0,099	3,194						
	Comp. gl	5542	2923	52147	5542	3051	-52252	11,084	5,974	-0,105	-2,52	123,7241	11,084	-0,105	5,974						
1a	1a 380C1F1 / 380C2F1	14918	38327	252760	14918	38327	-252760	29,836	76,654	0	0	3581,007	29,836	0	76,654	1a	0	9398,288	101,482	0	246,462
Wind, 10 dgr	Wind, 10 dgr 380C1F2/ 380C2F2	14917	35775	241952	14917	35775	-241952	29,834	71,55	0	0	2743,143	29,834	0	71,55	Wind angle: 90 dgr					
Permanent loads yg=	Permanent loads yg= 1.2380C1F3 / 380C2F3	14916	32556	228346	14916	32556	-228346	29,832	65,112	0	0	1954,695	29,832	0	65,112						
Wind angle: 90 dgr	Wind angle: 90 dgrGW / opgw	1949	6539	40255	1949	6539	-40255	3,898	13,078	0	0	652,1401	3,898	0	13,078						
	Comp. gl	4041	10034	67819	4041	10034	-67819	8,082	20,068	0	0	467,3026	8,082	0	20,068						
1b	1b 380C1F1 / 380C2F1	14900	13359	181105	14900	13359	-181105	29,8	26,718	0	0	1333,728	29,8	0	26,718	1b	0	3578,792	101,366	0	88,19
Wind, -20 dgr	Wind, -20 dgr 380C1F2/ 380C2F2	14900	12899	180081	14900	12899	-180081	29,8	25,798	0	0	1073,045	29,8	0	25,798	Wind angle: 90 dgr					
Permanent loads yg=	Permanent loads yg= 1.2380C1F3 / 380C2F3	14900	12323	178890	14900	12323	-178890	29,8	24,646	0	0	821,506	29,8	0	24,646						
Wind angle: 90 dgr	Wind angle: 90 dgrGW / opgw	1946	2012	24212	1946	2012	-24212	3,892	4,024	0	0	196,7327	3,892	0	4,024						
	Comp. gl	4037	3502	47847	4037	3502	-47847	8,074	7,004	0	0	153,7808	8,074	0	7,004						
3	3 380C1F1 / 380C2F1	25695	26578	259690	25695	26578	-259690	51,39	53,156	0	0	2618,65	51,39	0	53,156	3	0	7543,983	203,01	0	191,75
Wind+ice, -5 dgr	Wind+ice, -5 dgr 380C1F2/ 380C2F2	25695	25266	256221	25695	25266	-256221	51,39	50,532	0	0	2071,048	51,39	0	50,532	Wind angle: 90 dgr					
Permanent loads yg=	Permanent loads yg= 1.2380C1F3 / 380C2F3	25694	23622	252124	25694	23622	-252124	51,388	47,244	0	0	1549,453	51,388	0	47,244						
Wind angle: 90 dgr	Wind angle: 90 dgrGW / opgw	8086	7732	64556	8086	7732	-64556	16,172	15,464	0	0	754,2604	16,172	0	15,464						
	Comp. gl	16335	12677	124217	16335	12677	-124217	32,67	25,354	0	0	550,5721	32,67	0	25,354						
4	4 380C1F1 / 380C2F1	17914	13236	178213	17914	13236	-178213	35,828	26,472	0	0	1349,241	35,828	0	26,472	4	0	3646,749	123,966	0	88,166
Construction/mainter	Construction/maintenance, 5 dgr 380C1F2/ 380C2F2	17914	12785	177407	17914	12785	-177407	35,828	25,57	0	0	1091,306	35,828	0	25,57	Wind angle: 90 dgr					
Permanent loads yg=	Permanent loads yg= 1.2380C1F3 / 380C2F3	17914	12220	176474	17914	12220	-176474	35,828	24,44	0	0	842,3215	35,828	0	24,44						
Wind angle: 90 dgr	Wind angle: 90 dgrGW / opgw	2699	2110	26448	2699	2110	-26448	5,398	4,22	0	0	204,3957	5,398	0	4,22						
	Comp. gl	5542	3732	53097	5542	3732	-53097	11,084	7,464	0	0	159,4841	11,084	0	7,464						
1a	1a 380C1F1 / 380C2F1	14912	23138	189670	14910	20279	-178767	29,822	43,417	10,903	490,635	2085,28	29,822	10,903	43,417	1a	1255,653	5515,646	101,435	33,941	140,739
Wind, 10 dgr	Wind, 10 dgr 380C1F2/ 380C2F2	14911	21776	184396	14910	19149	-174662	29,821	40,925	9,734	355,291	1625,273	29,821	9,734	40,925	Wind angle: -45 dgr					
Permanent loads yg=	Permanent loads yg= 1.2380C1F3 / 380C2F3	14910	20067	177988	14909	17734	-169727	29,819	37,801	8,261	231,308	1189,93	29,819	8,261	37,801						
Wind angle: -45 dgr	Wind angle: -45 dgrGW / opgw	1948	3847	28499	1947	3334	-26317	3,895	7,181	2,182	109,7546	355,5254	3,895	2,182	7,181						
	Comp. gl	4039	6079	51032	4039	5336	-48171	8,078	11,415	2,861	68,664	259,6377	8,078	2,861	11,415						
1b	1b 380C1F1 / 380C2F1	14900	10657	176091	14900	10153	-175454	29,8	20,81	0,637	28,665	1067,868	29,8	0,637	20,81	1b	72,5763	2889,455	101,364	1,939	69,434
Wind, -20 dgr	Wind, -20 dgr 380C1F2/ 380C2F2	14900	10417	175775	14900	9954	-175230	29,8	20,371	0,545	19,8925	874,9595	29,8	0,545	20,371	Wind angle: -45 dgr					
Permanent loads yg=	Permanent loads yg= 1.2380C1F3 / 380C2F3	14900	10116	175411	14900	9703	-174974	29,8	19,819	0,437	12,236	686,35	29,8	0,437	19,819						
Wind angle: -45 dgr	Wind angle: -45 dgrGW / opgw	1946	1525	23017	1946	1435	-22861	3,892	2,96	0,156	7,8468	143,2135	3,892	0,156	2,96						
	Comp. gl	4036	2802	46552	4036	2672	-46388	8,072	5,474	0,164	3,936	117,0643	8,072	0,164	5,474						
3	3 380C1F1 / 380C2F1	25692	18873	242182	25692	17440	-239845	51,384	36,313	2,337	105,165	1860,688	51,384	2,337	36,313	3	269,7983	5383,492	202,984	7,223	132,652
Wind+ice, -5 dgr	Wind+ice, -5 dgr 380C1F2/ 380C2F2	25692	18190	241025	25692	16873	-239019	51,384	35,063	2,006	73,219	1506,403	51,384	2,006	35,063	Wind angle: -45 dgr					
Permanent loads yg=	Permanent loads yg= 1.2380C1F3 / 380C2F3	25692	17334	239686	25691	16162	-238064	51,383	33,496	1,622	45,416	1164,487	51,383	1,622	33,496						
Wind angle: -45 dgr	Wind angle: -45 dgrGW / opgw	8084	5298	60060	8084	4842	-59459	16,168	10,14	0,601	30,2303	486,4691	16,168	0,601	10,14						
	0 Comp. gl	16333	9151	119112	16332	8489	-118455	32,665	17,64	0,657	15,768	365,445	32,665	0,657	17,64						
4	4 380C1F1 / 380C2F1	17914	10581	174301	17913	10083	-173811	35,827	20,664	0,49	22,05	1087,877	35,827	0,49	20,664	4	54,1587	2969,898	123,962	1,446	69,745
Construction/mainter	Construction/maintenance, 5 dgr 380C1F2/ 380C2F2	17914	10344	174057	17913	9886	-173639	35,827	20,23	0,418	15,257	896,3921	35,827	0,418	20,23	Wind angle: -45 dgr					
Permanent loads yg=	Permanent loads yg= 1.2380C1F3 / 380C2F3	17913	10046	173777	17913	9637	-173443	35,826	19,683	0,334	9,352	709,1167	35,826	0,334	19,683						
Wind angle: -45 dgr	Wind angle: -45 dgrGW / opgw	2699	1641	25661	2699	1553	-25562	5,398	3,194	0,099	4,9797	152,7879	5,398	0,099	3,194						
	Comp. gl	5542	3051	52252	5542	2923	-52147	11,084	5,974	0,105	2,52	123,7241	11,084	0,105	5,974						
1a	1a 380C1F1 / 380C2F1	11178	5177	117394	11178	5177	-117394	22,356	10,354	0	0	564,52	22,356	0	10,354	1a	0	1549,129	76,044	0	35,192
Wind, 10 dgr	Wind, 10 dgr 380C1F2/ 380C2F2	11178	5174	117394	11178	5174	-117394	22,356	10,348	0	0	476,292	22,356	0	10,348	Wind angle: 0 dgr					
Permanent loads yg=	Permanent loads yg= 0.9380C1F3 / 380C2F3	11178	5169	117394	11178	5169	-117394	22,356	10,338	0	0	388,054	22,356	0	10,338						
Wind angle: 0 dgr	Wind angle: 0 dgrGW / opgw	1460	677	15289	1460	677	-15289	2,92	1,354	0	0	63,84884	2,92	0	1,354						
	Comp. gl	3028	1399	31734	3028	1399	-31734	6,056	2,798	0	0	56,41471	6,056	0	2,798						
1b	1b 380C1F1 / 380C2F1	11172	6290	143819	11172	6290	-143819	22,344	12,58	0	0	664,637	22,344	0	12,58	1b	0	1817,546	76,004	0	42,624
Wind, -20 dgr	Wind, -20 dgr 380C1F2/ 380C2F2	11172	6289	143819	11172	6289	-143819	22,344	12,578	0	0	557,634	22,344	0	12,578	Wind angle: 0 dgr					
Permanent loads yg=	Permanent loads yg= 0.9380C1F3 / 380C2F3	11172	6288	143819	11172	6288	-143819	22,344	12,576	0	0	450,665	22,344	0	12,576						
Wind angle: 0 dgr	Wind angle: 0 dgrGW / opgw	1459	803	18356	1459	803	-18356	2,918	1,606	0	0	76,52736	2,918	0	1,606						
	Comp. gl	3027	1642	37544	3027	1642	-37544	6,054	3,284	0	0	68,08226	6,054	0	3,284						
3	3 380C1F1 / 380C2F1	21959	9184	209682	21959	9184	-209682	43,918	18,368	0	0	1020,238	43,918	0	18,368	3	0	2995,257	177,582	0	69,748
Wind+ice, -5 dgr	Wind+ice, -5 dgr 380C1F2/ 380C2F2	21959	9182	209682	21959	9182	-209682	43,918	18,364	0	0	863,9644	43,918	0	18,364	Wind angle: 0 dgr					
Permanent loads yg=	Permanent loads yg= 0.9380C1F3 / 380C2F3	21959	9179	209682	21959	9179	-209682	43,918	18,358	0	0	707,7024	43,918	0	18,358						
Wind angle: 0 dgr	Wind angle: 0 dgrGW / opgw	7595	2434	55540	7595	2434	-55540	15,19	4,868	0	0	222,7134	15,19	0	4,868						
	Comp. gl	15319	4895	111800	15319	4895	-111800	30,638	9,79	0	0	180,6388	30,638	0	9,79						
4	4 380C1F1 / 380C2F1	14184	6342	145028	14184	6342	-145028	28,368	12,684	0	0	695,8829	28,368	0	12,684	4	0	1930,864	98,588	0	43,848
Construction/mainter	Construction/maintenance, 5 dgr 380C1F2/ 380C2F2	14184	6342	145028	14184	6342	-145028	28,368	12,684	0	0	588,0689	28,368	0	12,684	Wind angle: 0 dgr					
Permanent loads yg=	Permanent loads yg= 0.9380C1F3 / 380C2F3	14184	6341	145028	14184	6341	-145028	28,368	12,682	0	0	480,1989	28,368	0	12,682						
Wind angle: 0 dgr	Wind angle: 0 dgrGW / opgw	2211	952	21752	2211	952	-21752	4,422	1,904	0	0	89,32392	4,422	0	1,904						
	Comp. gl	4531	1947	44539	4531	1947	-44539	9,062	3,894	0	0	77,38907	9,062	0	3,894						
6	6 380C1F1 / 380C2F1	11178	5126	117395	11178	5126	-117395	22,356	10,252	0	0	559,93	22,356	0	10,252	6	0	1537,098	76,044	0	34,864
Permanent, +10 dgr	Permanent, 10 dgr 380C1F2/ 380C2F2	11178	5126	117395	11178	5126	-117395	22,356	10,252	0	0	472,788	22,356	0	10,252	0					
Permanent loads yg=	Permanent loads yg= 1.35380C1F3 / 380C2F3	11178	5126	117395	11178	5126	-117395	22,356	10,252	0	0	385,646	22,356	0	10,252						
	GW / opgw	1460	668	15289	1460	668	-15289	2,92	1,336	0	0	62,94344	2,92	0	1,336						
	Comp. gl	3028	1386	31734	3028	1386	-31734	6,056	2,772	0	0	55,79071	6,056	0	2,772						
1a	1a 380C1F1 / 380C2F1	11181	19444	159676	11182	22396	-172725	22,363	41,84	-13,049	-587,205	1981,421	22,363	-13,049	41,84	1a	-1512,78	5221,321	76,066	-41,037	135,106
Wind, 10 dgr	Wind, 10 dgr 380C1F2/ 380C2F2	11181	18273	154641	11182	20991	-166465	22,363	39,264	-11,824	-431,576	1531,757	22,363	-11,824	39,264	Wind angle: 45 dgr					
Permanent loads yg=	Permanent loads yg= 0.9380C1F3 / 380C2F3	11180	16805	148484	11181	19225	-158726	22,361	36,03	-10,242	-286,776	1107,452	22,361	-10,242	36,03						
Wind angle: 45 dgr	Wind angle: 45 dgrGW / opgw	1460	3242	24215	1461	3768	-26690	2,921	7,01	-2,475	-124,493	348,3442	2,921	-2,475	7,01						
	Comp. gl	3029	5097	42700	3029	5865	-46147	6,058	10,962	-3,447	-82,728	252,3472	6,058	-3,447	10,962						
1b	1b 380C1F1 / 380C2F1	11172	8868	146034	11173	9385	-146964	22,345	18,253	-0,93	-41,85	919,9265	22,345	-0,93	18,253	1b	-105,879	2480,217	76,005	-2,831	60,665
Wind, -20 dgr	Wind, -20 dgr 380C1F2/ 380C2F2	11172	8664	145707	11172	9139	-146503	22,344	17,803	-0,796	-29,054	748,3465	22,344	-0,796	17,803	Wind angle: 45 dgr					
Permanent loads yg=	Permanent loads yg= 0.9380C1F3 / 380C2F3	11172	8408	145330	11172	8830	-145971	22,344	17,238	-0,641	-17,948	581,201	22,344	-0,641	17,238						
Wind angle: 45 dgr	Wind angle: 45 dgrGW / opgw	1459	1262	18902	1459	1355	-19126	2,918	2,617	-0,224	-11,2672	127,3807	2,918	-0,224	2,617						
	Comp. gl	3027	2310	38113	3027	2444	-38353	6,054	4,754	-0,24	-5,76	103,3623	6,054	-0,24	4,754						
3	3 380C1F1 / 380C2F1	21960	16424	216603	21961	17878	-219437	43,921	34,302	-2,834	-127,53	1737,282	43,921	-2,834	34,302	3	-321,843	5047,071	177,592	-8,618	125,922
Wind+ice, -5 dgr	Wind+ice, -5 dgr 380C1F2/ 380C2F2	21960	15850	215596	21960	17185	-218037	43,92	33,035	-2,441	-89,0965	1399,465	43,92	-2,441	33,035	Wind angle: 45 dgr					
Permanent loads yg=	Permanent loads yg= 0.9380C1F3 / 380C2F3	21960	15129	214430	21960	16316	-216409	43,92	31,445	-1,979	-55,412	1074,147	43,92	-1,979	31,445						
Wind angle: 45 dgr	Wind angle: 45 dgrGW / opgw	7596	4739	57102	7596	5196	-57751	15,192	9,935	-0,649	-32,6447	477,5806	15,192	-0,649	9,935						
	Comp. gl	15319	8270	113466	15320	8935	-114181	30,639	17,205	-0,715	-17,16	358,5971	30,639	-0,715	17,205						
4	4 380C1F1 / 380C2F1	14184	8894	146589	14184	9399	-147257	28,368	18,293	-0,668	-30,06	948,2879	28,368	-0,668	18,293	4	-73,5022	2585,439	98,588	-1,963	61,673

Construction/maintenance	Construction/maintenance, 5 dgr 380C1F2/ 380C2F2	14184	8694	146355	14184	9159	-146926	28,368	17,853	-0,571	-20,8415	776,7374	28,368	-0,571	17,853	Wind angle: 45 dgr											
Permanent loads VP	Permanent loads vg= 0.9380C1F3 / 380C2F3	14184	8442	146086	14184	8857	-146544	28,368	17,299	-0,458	-12,824	609,4749	28,368	-0,458	17,299												
Wind angle: 45 dgr	Wind angle: 45 dgrGW / opgw	2211	1400	22056	2211	1489	-22185	4,422	2,889	-0,129	-6,4887	138,8694	4,422	-0,129	2,889												
	Comp. gl	4531	2605	44856	4531	2734	-44993	9,062	5,339	-0,137	-3,288	112,0691	9,062	-0,137	5,339												
1a	1a 380C1F1 / 380C2F1	11188	37902	243059	11188	37902	-243059	22,376	75,804	0	0	3509,858	22,376	0	75,804	1a	0	9193,444	76,106	0	243,32						
Wind, 10 dgr	Wind, 10 dgr 380C1F2/ 380C2F2	11187	35313	231406	11187	35313	-231406	22,374	70,626	0	0	2676,518	22,374	0	70,626	Wind angle: 90 dgr											
Permanent loads VP	Permanent loads vg= 0.9380C1F3 / 380C2F3	11186	32039	216560	11186	32039	-216560	22,372	64,078	0	0	1892,845	22,372	0	64,078												
Wind angle: 90 dgr	Wind angle: 90 dgrGW / opgw	1462	6497	39301	1462	6497	-39301	2,924	12,994	0	0	649,335	2,924	0	12,994												
	Comp. gl	3030	9909	64971	3030	9909	-64971	6,06	19,818	0	0	464,8876	6,06	0	19,818												
1b	1b 380C1F1 / 380C2F1	11173	12178	154081	11173	12178	-154081	22,346	24,356	0	0	1194,566	22,346	0	24,356	1b	0	3191,919	76,01	0	80,022						
Wind, -20 dgr	Wind, -20 dgr 380C1F2/ 380C2F2	11173	11700	152650	11173	11700	-152650	22,346	23,4	0	0	952,6459	22,346	0	23,4	Wind angle: 90 dgr											
Permanent loads VP	Permanent loads vg= 0.9380C1F3 / 380C2F3	11173	11103	150973	11173	11103	-150973	22,346	22,206	0	0	720,3139	22,346	0	22,206												
Wind angle: 90 dgr	Wind angle: 90 dgrGW / opgw	1459	1862	20775	1459	1862	-20775	2,918	3,724	0	0	183,0628	2,918	0	3,724												
	Comp. gl	3027	3168	40194	3027	3168	-40194	6,054	6,336	0	0	141,1303	6,054	0	6,336												
3	3 380C1F1 / 380C2F1	21964	25723	240154	21964	25723	-240154	43,928	51,446	0	0	2508,792	43,928	0	51,446	3	0	7239,696	177,618	0	185,886						
Wind+ice, -5 dgr	Wind+ice, -5 dgr 380C1F2/ 380C2F2	21963	24386	236112	21963	24386	-236112	43,926	48,772	0	0	1973,892	43,926	0	48,772	Wind angle: 90 dgr											
Permanent loads VP	Permanent loads vg= 0.9380C1F3 / 380C2F3	21962	22711	231302	21962	22711	-231302	43,924	45,422	0	0	1465,521	43,924	0	45,422												
Wind angle: 90 dgr	Wind angle: 90 dgrGW / opgw	7598	7644	62562	7598	7644	-62562	15,196	15,288	0	0	746,8306	15,196	0	15,288												
	Comp. gl	15322	12479	119694	15322	12479	-119694	30,644	24,958	0	0	544,6602	30,644	0	24,958												
4	4 380C1F1 / 380C2F1	14184	12112	152494	14184	12112	-152494	28,368	24,224	0	0	1215,183	28,368	0	24,224	4	0	3275,726	98,59	0	80,454						
Construction/maintenance	Construction/maintenance, 5 dgr 380C1F2/ 380C2F2	14184	11650	151426	14184	11650	-151426	28,368	23,3	0	0	975,5529	28,368	0	23,3	Wind angle: 90 dgr											
Permanent loads VP	Permanent loads vg= 0.9380C1F3 / 380C2F3	14184	11071	150183	14184	11071	-150183	28,368	22,142	0	0	745,0789	28,368	0	22,142												
Wind angle: 90 dgr	Wind angle: 90 dgrGW / opgw	2212	1968	23187	2212	1968	-23187	4,424	3,936	0	0	191,5306	4,424	0	3,936												
	Comp. gl	4531	3426	46086	4531	3426	-46086	9,062	6,852	0	0	148,3811	9,062	0	6,852												
1a	1a 380C1F1 / 380C2F1	11182	22396	172725	11181	19444	-159676	22,363	41,84	13,049	587,205	1981,421	22,363	13,049	41,84	1a	1512,778	5221,321	76,066	41,037	135,106						
Wind, 10 dgr	Wind, 10 dgr 380C1F2/ 380C2F2	11182	20991	166465	11181	18273	-154641	22,363	39,264	11,824	431,576	1531,757	22,363	11,824	39,264	Wind angle: -45 dgr											
Permanent loads VP	Permanent loads vg= 0.9380C1F3 / 380C2F3	11181	19225	158726	11180	16805	-148484	22,361	36,03	10,242	286,776	1107,452	22,361	10,242	36,03												
Wind angle: -45 dgr	Wind angle: -45 dgrGW / opgw	1461	3768	26690	1460	3242	-24215	2,921	7,01	2,475	124,4925	348,3442	2,921	2,475	7,01												
	Comp. gl	3029	5865	46147	3029	5097	-42700	6,058	10,962	3,447	82,728	252,3472	6,058	3,447	10,962												
1b	1b 380C1F1 / 380C2F1	11173	9385	146964	11172	8868	-146034	22,345	18,253	0,93	41,85	919,9265	22,345	0,93	18,253	1b	105,8792	2480,217	76,005	2,831	60,665						
Wind, -20 dgr	Wind, -20 dgr 380C1F2/ 380C2F2	11172	9139	146503	11172	8664	-145707	22,344	17,803	0,796	29,054	748,3465	22,344	0,796	17,803	Wind angle: -45 dgr											
Permanent loads VP	Permanent loads vg= 0.9380C1F3 / 380C2F3	11172	8830	145971	11172	8408	-145330	22,344	17,238	0,641	17,948	581,201	22,344	0,641	17,238												
Wind angle: -45 dgr	Wind angle: -45 dgrGW / opgw	1459	1355	19126	1459	1262	-18902	2,918	2,617	0,224	11,2672	127,3807	2,918	0,224	2,617												
	Comp. gl	3027	2444	38353	3027	2310	-38113	6,054	4,754	0,24	5,76	103,3623	6,054	0,24	4,754												
3	3 380C1F1 / 380C2F1	21961	17878	219437	21960	16424	-216603	43,921	34,302	2,834	127,53	1737,282	43,921	2,834	34,302	3	321,8432	5047,071	177,592	8,618	125,922						
Wind+ice, -5 dgr	Wind+ice, -5 dgr 380C1F2/ 380C2F2	21960	17185	218037	21960	15850	-215596	43,92	33,035	2,441	89,0965	1399,465	43,92	2,441	33,035	Wind angle: -45 dgr											
Permanent loads VP	Permanent loads vg= 0.9380C1F3 / 380C2F3	21960	16316	216409	21960	15129	-214430	43,92	31,445	1,979	55,412	1074,147	43,92	1,979	31,445												
Wind angle: -45 dgr	Wind angle: -45 dgrGW / opgw	7596	5196	57751	7596	4739	-57102	15,192	9,935	0,649	32,6447	477,5806	15,192	0,649	9,935												
	0 Comp. gl	15320	8935	114181	15319	8270	-113466	30,639	17,205	0,715	17,16	358,5971	30,639	0,715	17,205												
4	4 380C1F1 / 380C2F1	14184	9399	147257	14184	8894	-146589	28,368	18,293	0,668	30,06	948,2879	28,368	0,668	18,293	4	73,5022	2585,439	98,588	1,963	61,673						
Construction/maintenance	Construction/maintenance, 5 dgr 380C1F2/ 380C2F2	14184	9159	146926	14184	8694	-146355	28,368	17,853	0,571	20,8415	776,7374	28,368	0,571	17,853	Wind angle: -45 dgr											
Permanent loads VP	Permanent loads vg= 0.9380C1F3 / 380C2F3	14184	8857	146544	14184	8442	-146086	28,368	17,299	0,458	12,824	609,4749	28,368	0,458	17,299												
Wind angle: -45 dgr	Wind angle: -45 dgrGW / opgw	2211	1489	22185	2211	1400	-22056	4,422	2,889	0,129	6,4887	138,8694	4,422	0,129	2,889												
	Comp. gl	4531	2734	44993	4531	2605	-44856	9,062	5,339	0,137	3,288	112,0691	9,062	0,137	5,339												

W25350+5 09-12

Hoogte mast	Ber & bijlage	51 m			
Hoogte onderste stroomdraad (F3)		28 m			
		Hoogte		Excentriciteit ophanging t.o.v. hart mast	
Bliksemdraad = GW / CH_{max} -	0,7 m =	50,3 m		-1,458 m	
1e traverse - 380C1F1 F2 +	8,5 m =	45 m		4,41 m	
2e traverse - 380C1F2 F3 +	8,5 m =	36,5 m		4,41 m	
3e traverse - 380C1F3		28 m		4,41 m	
Passieve lijn = Comp C. F3 -	4 m =	24 m		-1,773 m	

Uit mast			Uit lijnen					
ULS (incl bel factoren)			SLS					
N	V	M	Nmin	Nmax	Vmax	Mlangs;max	Mdwars;max	
[kN]	[kN]	[kNm]	[kN]	[kN]	[kN]	[kNm]	[kNm]	
318	81	2034	84	152	172	792	6619	

		Belastingen uit lijnen					Belasting uit mast		
			M_{langs}	M_{dwars}	N	V_{langs}	V_{dwars}	N	V	M
SLS	0 deg	1a 380C1F1	0	**1684**	85	0	**38**	265	54	1356
		1b 380C1F1	0	1960	**84**	0	46	265	54	1356
		3 380C1F1 ,	0	2708	152	0	63	265	54	1356
		4 380C1F1 ,	0	1949	100	0	44	265	54	1356
	45 deg	1a 380C1F1	**-792**	4031	85	**-21**	102	265	54	1356
		1b 380C1F1	-41	2394	**84**	-1	58	265	54	1356
		3 380C1F1 ,	-177	4065	152	-5	100	265	54	1356
		4 380C1F1 ,	-32	2381	100	-1	56	265	54	1356
	90 deg	1a 380C1F1	0	**6619**	85	0	**172**	265	54	1356
		1b 380C1F1	0	2848	**84**	0	70	265	54	1356
		3 380C1F1 ,	0	5504	**152**	0	139	265	54	1356
		4 380C1F1 ,	0	2830	100	0	68	265	54	1356
	-45 deg	1a 380C1F1	**792**	4031	85	**21**	102	265	54	1356
		1b 380C1F1	41	2394	**84**	1	58	265	54	1356
		3 380C1F1 ,	177	4065	152	5	100	265	54	1356
		4 380C1F1 ,	32	2381	100	1	56	265	54	1356

regel		Loadcase	Totaal M_{langs}	M_{dwars}	N	V_{langs}	V_{dwars}	Totaal moment	M langs max	M dwars max	N max	V langs max	V dwars max	M tot max	N min
1 Perm load 1,2	0 deg	1a	1356	3040	350	54	92	3328,752	1						
2 Perm load 1,2	0 deg	1b	1356	3316	349	54	100	3582,093	2						x
3 Perm load 1,2	0 deg	3	1356	4064	417	54	117	4284,13	3						
4 Perm load 1,2	0 deg	4	1356	3305	365	54	98	3572,734	4						
5									5						
6 Perm load 1,2	45 deg	1a	2148	5387	350	75	156	5799,545	6 x		x				
7 Perm load 1,2	45 deg	1b	1397	3750	349	55	112	4001,523	7						x
8 Perm load 1,2	45 deg	3	1533	5421	417	59	154	5633,388	8						
9 Perm load 1,2	45 deg	4	1388	3737	365	55	110	3986,872	9						
10									10						
11 Perm load 1,2	90 deg	1a	1356	7975	350	54	226	8089,429	11	x		x	x		
12 Perm load 1,2	90 deg	1b	1356	4204	349	54	124	4417,617	12						x
13 Perm load 1,2	90 deg	3	1356	6860	417	54	193	6992,56	13	x					
14 Perm load 1,2	90 deg	4 Construct	1356	4186	365	54	122	4399,949	14						
15									15						
16 Perm load 1,2	-45 deg	1a	1751	5387	350	75	156	5664,441	16			x			
17 Perm load 1,2	-45 deg	1b	1000	3750	349	55	112	3880,727	17						x
18 Perm load 1,2	-45 deg	3	1135	5421	417	59	154	5538,543	18						
19 Perm load 1,2	-45 deg	4	991	3737	365	55	110	3866,55	19						
			2148	7975	417	75	226	8089							
					349										

samenvatting

Mast	Bijlage	Wind	Loadcase	M_{langs}	M_{dwars}	N	V_{langs}	V_{dwars}
6 W25350+5 09-12		Perm load :45 deg	1a	2148	5387	350	75	156
7 W25350+5 09-12		Perm load :45 deg	1b	1397	3750	349	55	112
11 W25350+5 09-12		Perm load :90 deg	1a	1356	7975	350	54	226
13 W25350+5 09-12		Perm load :90 deg	3	1356	6860	417	54	193
W25350+5 09-12		#N/B #N/B	#N/B	#N/B	#N/B	#N/B	#N/B	#N/B
W25350+5 09-12		#N/B #N/B	#N/B	#N/B	#N/B	#N/B	#N/B	#N/B
		#N/B #N/B	#N/B	#N/B	#N/B	#N/B	#N/B	#N/B

-116- 74100706-I12-00138 REV 3

W2350+5 TOWER APPENDIX: I2

Loadcases for tower deflection analyses (Servicabili limit state)

Loadcase	according to 50341-3-15						Totaal Vert	Dwars	Langs
	[N]	[N]	[N]	[N]	[N]	[N]	[kN]	[kN]	[kN]
1a 380C1F1 / 380C2F1	12421	5598	127433	12421	5598	-127433	24,842	11,196	0
Wind, 10 dgr 380C1F2/ 380C2F2	12421	5596	127433	12421	5596	-127433	24,842	11,192	0
Permanent loads vg= 1.0380C1F3 /	12421	5593	127433	12421	5593	-127433	24,842	11,186	0
Wind angle: 0 dgrGW / opgw	1622	733	16643	1622	733	-16643	3,244	1,466	0
Comp. gl	3365	1516	34520	3365	1516	-34520	6,73	3,032	0
1b 380C1F1 / 380C2F1	12415	6739	154196	12415	6739	-154196	24,83	13,478	0
Wind, -20 dgr 380C1F2/ 380C2F2	12415	6739	154196	12415	6739	-154196	24,83	13,478	0
Permanent loads vg= 1.0380C1F3 /	12415	6738	154196	12415	6738	-154196	24,83	13,476	0
Wind angle: 0 dgrGW / opgw	1621	865	19778	1621	865	-19778	3,242	1,73	0
Comp. gl	3363	1768	40455	3363	1768	-40455	6,726	3,536	0
3 380C1F1 / 380C2F1	19607	8468	193497	19607	8468	-193497	39,214	16,936	0
Wind+ice, -5 dgr 380C1F2/ 380C2F	19607	8466	193497	19607	8466	-193497	39,214	16,932	0
Permanent loads vg= 1.0380C1F3 /	19607	8464	193497	19607	8464	-193497	39,214	16,928	0
Wind angle: 0 dgrGW / opgw	5711	1989	45404	5711	1989	-45404	11,422	3,978	0
Comp. gl	11555	4010	91636	11555	4010	-91636	23,11	8,02	0
4 380C1F1 / 380C2F1	14424	6420	146877	14424	6420	-146877	28,848	12,84	0
Construction/maintenance, 5 dgr	14424	6419	146877	14424	6419	-146877	28,848	12,838	0
Permanent loads vg= 1.0380C1F3 /	14424	6419	146877	14424	6419	-146877	28,848	12,838	0
Wind angle: 0 dgrGW / opgw	2123	922	21079	2123	922	-21079	4,246	1,844	0
Comp. gl	4367	1892	43294	4367	1892	-43294	8,734	3,784	0
1a 380C1F1 / 380C2F1	12422	14713	146571	12423	16603	-153485	24,845	31,316	-6,914
Wind, 10 dgr 380C1F2/ 380C2F2	12422	13968	144014	12423	15702	-150118	24,845	29,67	-6,104
Permanent loads vg= 1.0380C1F3 /	12422	13036	140978	12422	14574	-146083	24,844	27,61	-5,105
Wind angle: 45 dgrGW / opgw	1622	2372	20964	1623	2713	-22404	3,245	5,085	-1,44
Comp. gl	3365	3877	39438	3365	4367	-41236	6,73	8,244	-1,798
1b 380C1F1 / 380C2F1	12415	8430	155030	12415	8764	-155393	24,83	17,194	-0,363
Wind, -20 dgr 380C1F2/ 380C2F2	12415	8298	154904	12415	8605	-155213	24,83	16,903	-0,309
Permanent loads vg= 1.0380C1F3 /	12415	8132	154758	12415	8406	-155006	24,83	16,538	-0,248
Wind angle: 45 dgrGW / opgw	1621	1164	19988	1621	1223	-20077	3,242	2,387	-0,089
Comp. gl	3363	2206	40669	3363	2293	-40762	6,726	4,499	-0,093
3 380C1F1 / 380C2F1	19607	13249	197078	19607	14201	-198583	39,214	27,45	-1,505
Wind+ice, -5 dgr 380C1F2/ 380C2F	19607	12872	196548	19607	13747	-197838	39,214	26,619	-1,29
Permanent loads vg= 1.0380C1F3 /	19607	12399	195937	19607	13178	-196976	39,214	25,577	-1,039
Wind angle: 45 dgrGW / opgw	5711	3523	46421	5711	3828	-46848	11,422	7,351	-0,427
Comp. gl	11555	6258	92713	11555	6700	-93178	23,11	12,958	-0,465
4 380C1F1 / 380C2F1	14424	8104	147534	14424	8434	-147824	28,848	16,538	-0,29
Construction/maintenance, 5 dgr	14424	7973	147433	14424	8277	-147680	28,848	16,25	-0,247
Permanent loads vg= 1.0380C1F3 /	14424	7808	147318	14424	8080	-147515	28,848	15,888	-0,197
Wind angle: 45 dgrGW / opgw	2123	1218	21219	2123	1276	-21280	4,246	2,494	-0,061
Comp. gl	4367	2327	43436	4367	2413	-43500	8,734	4,74	-0,064
1a 380C1F1 / 380C2F1	12427	26747	196063	12427	26747	-196063	24,854	53,494	0
Wind, 10 dgr 380C1F2/ 380C2F2	12426	25033	188534	12426	25033	-188534	24,852	50,066	0
Permanent loads vg= 1.0380C1F3 /	12425	22875	179172	12425	22875	-179172	24,85	45,75	0
Wind angle: 90 dgrGW / opgw	1623	4523	30615	1623	4523	-30615	3,246	9,046	0
Comp. gl	3366	7004	52466	3366	7004	-52466	6,732	14,008	0
1b 380C1F1 / 380C2F1	12415	10545	158280	12415	10545	-158280	24,83	21,09	0
Wind, -20 dgr 380C1F2/ 380C2F2	12415	10242	157685	12415	10242	-157685	24,83	20,484	0
Permanent loads vg= 1.0380C1F3 /	12415	9862	156996	12415	9862	-156996	24,83	19,724	0
Wind angle: 90 dgrGW / opgw	1621	1544	20775	1621	1544	-20775	3,242	3,088	0
Comp. gl	3363	2754	41506	3363	2754	-41506	6,726	5,508	0
3 380C1F1 / 380C2F1	19609	19327	210048	19609	19327	-210048	39,218	38,654	0
Wind+ice, -5 dgr 380C1F2/ 380C2F	19609	18453	207752	19609	18453	-207752	39,218	36,906	0
Permanent loads vg= 1.0380C1F3 /	19608	17359	205055	19608	17359	-205055	39,216	34,718	0
Wind angle: 90 dgrGW / opgw	5712	5459	50066	5712	5459	-50066	11,424	10,918	0
Comp. gl	11556	9059	96804	11556	9059	-96804	23,112	18,118	0
4 380C1F1 / 380C2F1	14425	10192	150154	14425	10192	-150154	28,85	20,384	0
Construction/maintenance, 5 dgr	14425	9894	149671	14425	9894	-149671	28,85	19,788	0
Permanent loads vg= 1.0380C1F3 /	14424	9520	149114	14424	9520	-149114	28,848	19,04	0
Wind angle: 90 dgrGW / opgw	2123	1587	21763	2123	1587	-21763	4,246	3,174	0
Comp. gl	4367	2864	44015	4367	2864	-44015	8,734	5,728	0
1a 380C1F1 / 380C2F1	12423	16603	153485	12422	14713	-146571	24,845	31,316	6,914
Wind, 10 dgr 380C1F2/ 380C2F2	12423	15702	150118	12422	13968	-144014	24,845	29,67	6,104
Permanent loads vg= 1.0380C1F3 /	12422	14574	146083	12422	13036	-140978	24,844	27,61	5,105
Wind angle: -45 dgrGW / opgw	1623	2713	22404	1622	2372	-20964	3,245	5,085	1,44
Comp. gl	3365	4367	41236	3365	3877	-39438	6,73	8,244	1,798
1b 380C1F1 / 380C2F1	12415	8764	155393	12415	8430	-155030	24,83	17,194	0,363
Wind, -20 dgr 380C1F2/ 380C2F2	12415	8605	155213	12415	8298	-154904	24,83	16,903	0,309
Permanent loads vg= 1.0380C1F3 /	12415	8406	155006	12415	8132	-154758	24,83	16,538	0,248
Wind angle: -45 dgrGW / opgw	1621	1223	20077	1621	1164	-19988	3,242	2,387	0,089
Comp. gl	3363	2293	40762	3363	2206	-40669	6,726	4,499	0,093
3 380C1F1 / 380C2F1	19607	14201	198583	19607	13249	-197078	39,214	27,45	1,505
Wind+ice, -5 dgr 380C1F2/ 380C2F	19607	13747	197838	19607	12872	-196548	39,214	26,619	1,29
Permanent loads vg= 1.0380C1F3 /	19607	13178	196976	19607	12399	-195937	39,214	25,577	1,039
Wind angle: -45 dgrGW / opgw	5711	3828	46848	5711	3523	-46421	11,422	7,351	0,427
Comp. gl	11555	6700	93178	11555	6258	-92713	23,11	12,958	0,465
4 380C1F1 / 380C2F1	14424	8434	147824	14424	8104	-147534	28,848	16,538	0,29
Construction/maintenance, 5 dgr	14424	8277	147680	14424	7973	-147433	28,848	16,25	0,247
Permanent loads vg= 1.0380C1F3 /	14424	8080	147515	14424	7808	-147318	28,848	15,888	0,197
Wind angle: -45 dgrGW / opgw	2123	1276	21280	2123	1218	-21219	4,246	2,494	0,061
Comp. gl	4367	2413	43500	4367	2327	-43436	8,734	4,74	0,064

Belastingen op mastvoet, per lijn

	M_{langs}	M_{dwars}	N	V_{langs}	V_{dwars}
1a 380C1F1 / 380C2F1	0	613,3732	24,842	0	11,196
Wind, 10 dgr 380C1F2/ 380C2F2	0	518,0612	24,842	0	11,192
Permanent loads vg= 1.0380C1F3 /	0	422,7612	24,842	0	11,186
Wind angle: 0 dgrGW / opgw	0	69,01005	3,244	0	1,466
Comp. gl	0	60,83571	6,73	0	3,032
1b 380C1F1 / 380C2F1	0	716,0103	24,83	0	13,478
Wind, -20 dgr 380C1F2/ 380C2F2	0	601,4473	24,83	0	13,478
Permanent loads vg= 1.0380C1F3 /	0	486,8283	24,83	0	13,476
Wind angle: 0 dgrGW / opgw	0	82,29216	3,242	0	1,73
Comp. gl	0	72,9388	6,726	0	3,536
3 380C1F1 / 380C2F1	0	935,0537	39,214	0	16,936
Wind+ice, -5 dgr 380C1F2/ 380C2F	0	790,9517	39,214	0	16,932
Permanent loads vg= 1.0380C1F3 /	0	646,9177	39,214	0	16,928
Wind angle: 0 dgrGW / opgw	0	183,4401	11,422	0	3,978
Comp. gl	0	151,506	23,11	0	8,02
4 380C1F1 / 380C2F1	0	705,0197	28,848	0	12,84
Construction/maintenance, 5 dgr	0	595,8067	28,848	0	12,838
Permanent loads vg= 1.0380C1F3 /	0	486,6837	28,848	0	12,838
Wind angle: 0 dgrGW / opgw	0	86,56253	4,246	0	1,844
Comp. gl	0	75,33062	8,734	0	3,784
1a 380C1F1 / 380C2F1	-311,13	1518,786	24,845	-6,914	31,316
Wind, 10 dgr 380C1F2/ 380C2F2	-222,796	1192,521	24,845	-6,104	29,67
Permanent loads vg= 1.0380C1F3 /	-142,94	882,642	24,844	-5,105	27,61
Wind angle: 45 dgrGW / opgw	-72,432	251,0443	3,245	-1,44	5,085
Comp. gl	-43,152	185,9237	6,73	-1,798	8,244
1b 380C1F1 / 380C2F1	-16,335	883,2303	24,83	0,363	17,194
Wind, -20 dgr 380C1F2/ 380C2F2	-11,2785	726,4598	24,83	-0,309	16,903
Permanent loads vg= 1.0380C1F3 /	-6,944	572,5643	24,83	-0,248	16,538
Wind angle: 45 dgrGW / opgw	-4,4767	115,3393	3,242	-0,089	2,387
Comp. gl	-2,232	96,0508	6,726	-0,093	4,499
3 380C1F1 / 380C2F1	-67,725	1408,184	39,214	-1,505	27,45
Wind+ice, -5 dgr 380C1F2/ 380C2F	-47,085	1144,527	39,214	-1,29	26,619
Permanent loads vg= 1.0380C1F3 /	-29,092	889,0897	39,214	-1,039	25,577
Wind angle: 45 dgrGW / opgw	-21,4781	353,102	11,422	-0,427	7,351
Comp. gl	-11,16	270,018	23,11	-0,465	12,958
4 380C1F1 / 380C2F1	-13,05	871,4297	28,848	-0,29	16,538
Construction/maintenance, 5 dgr	-9,0155	720,3447	28,848	-0,247	16,25
Permanent loads vg= 1.0380C1F3 /	-5,516	572,0837	28,848	-0,197	15,888
Wind angle: 45 dgrGW / opgw	-3,0683	119,2575	4,246	-0,061	2,494
Comp. gl	-1,536	98,27462	8,734	-0,064	4,74
1a 380C1F1 / 380C2F1	0	2516,836	24,854	0	53,494
Wind, 10 dgr 380C1F2/ 380C2F2	0	1937,006	24,852	0	50,066
Permanent loads vg= 1.0380C1F3 /	0	1390,589	24,85	0	45,75
Wind angle: 90 dgrGW / opgw	0	450,2811	3,246	0	9,046
Comp. gl	0	324,2562	6,732	0	14,008
1b 380C1F1 / 380C2F1	0	1058,55	24,83	0	21,09
Wind, -20 dgr 380C1F2/ 380C2F2	0	857,1663	24,83	0	20,484
Permanent loads vg= 1.0380C1F3 /	0	661,7723	24,83	0	19,724
Wind angle: 90 dgrGW / opgw	0	150,5996	3,242	0	3,088
Comp. gl	0	120,2668	6,726	0	5,508
3 380C1F1 / 380C2F1	0	1912,381	39,218	0	38,654
Wind+ice, -5 dgr 380C1F2/ 380C2F	0	1520,02	39,218	0	36,906
Permanent loads vg= 1.0380C1F3 /	0	1145,047	39,216	0	34,718
Wind angle: 90 dgrGW / opgw	0	532,5192	11,424	0	10,918
Comp. gl	0	393,8544	23,112	0	18,118
4 380C1F1 / 380C2F1	0	1044,509	28,85	0	20,384
Construction/maintenance, 5 dgr	0	849,4905	28,85	0	19,788
Permanent loads vg= 1.0380C1F3 /	0	660,3397	28,848	0	19,04
Wind angle: 90 dgrGW / opgw	0	153,4615	4,246	0	3,174
Comp. gl	0	121,9866	8,734	0	5,728
1a 380C1F1 / 380C2F1	311,13	1518,786	24,845	6,914	31,316
Wind, 10 dgr 380C1F2/ 380C2F2	222,796	1192,521	24,845	6,104	29,67
Permanent loads vg= 1.0380C1F3 /	142,94	882,642	24,844	5,105	27,61
Wind angle: -45 dgrGW / opgw	72,432	251,0443	3,245	1,44	5,085
Comp. gl	43,152	185,9237	6,73	1,798	8,244
1b 380C1F1 / 380C2F1	16,335	883,2303	24,83	0,363	17,194
Wind, -20 dgr 380C1F2/ 380C2F2	11,2785	726,4598	24,83	0,309	16,903
Permanent loads vg= 1.0380C1F3 /	6,944	572,5643	24,83	0,248	16,538
Wind angle: -45 dgrGW / opgw	4,4767	115,3393	3,242	0,089	2,387
Comp. gl	2,232	96,0508	6,726	0,093	4,499
3 380C1F1 / 380C2F1	67,725	1408,184	39,214	1,505	27,45
Wind+ice, -5 dgr 380C1F2/ 380C2F	47,085	1144,527	39,214	1,29	26,619
Permanent loads vg= 1.0380C1F3 /	29,092	889,0897	39,214	1,039	25,577
Wind angle: -45 dgrGW / opgw	21,4781	353,102	11,422	0,427	7,351
Comp. gl	11,16	270,018	23,11	0,465	12,958
4 380C1F1 / 380C2F1	13,05	871,4297	28,848	0,29	16,538
Construction/maintenance, 5 dgr	9,0155	720,3447	28,848	0,247	16,25
Permanent loads vg= 1.0380C1F3 /	5,516	572,0837	28,848	0,197	15,888
Wind angle: -45 dgrGW / opgw	3,0683	119,2575	4,246	0,061	2,494
Comp. gl	1,536	98,27462	8,734	0,064	4,74

Belasting op mastvoet, belastinggeval

		M_{langs}	M_{dwars}	N	V_{langs}	V_{dwars}
1a 380C1F1	0	1684,041	84,5	0	38,072	
Wind angle: 0 dgrGW / opgw						
1b 380C1F1	0	1959,517	84,458	0	45,698	
Wind angle: 0 dgrGW / opgw						
3 380C1F1 ,	0	2707,869	152,174	0	62,794	
Wind angle: 0 dgrGW / opgw						
4 380C1F1 ,	0	1949,403	99,524	0	44,144	
Wind angle: 0 dgrGW / opgw						
1a 380C1F1	-792,45	4030,918	84,509	-21,361	101,925	
Wind angle: 45 dgrGW / opgw						
1a 380C1F1	0	6618,968	84,534	0	172,364	
Wind angle: 90 dgrGW / opgw						
1b 380C1F1	0	2848,355	84,458	0	69,894	
Wind angle: 90 dgrGW / opgw						
3 380C1F1 ,	0	5503,822	152,188	0	139,314	
Wind angle: 90 dgrGW / opgw						
4 380C1F1 ,	0	2829,787	99,528	0	68,114	
Wind angle: 90 dgrGW / opgw						
1a 380C1F1	792,45	4030,918	84,509	21,361	101,925	
Wind angle: -45 dgrGW / opgw						
1b 380C1F1	41,2662	2393,644	84,458	1,102	57,521	
Wind angle: -45 dgrGW / opgw						
3 380C1F1 ,	-176,54	4064,921	152,174	-4,726	99,955	
Wind angle: 45 dgrGW / opgw						
4 380C1F1 ,	-32,1858	2381,39	99,524	-0,859	55,91	
Wind angle: 45 dgrGW / opgw						
3 380C1F1 ,	176,5401	4064,921	152,174	4,726	99,955	
Wind angle: -45 dgrGW / opgw						
4 380C1F1 ,	32,1858	2381,39	99,524	0,859	55,91	
Wind angle: -45 dgrGW / opgw						

Hoogte mast	Ber & bijlage		50	m			
Hoogte onderste stroomdraad (F3)			24	m			
			Hoogte		Excentriciteit ophanging t.o.v. hart mast		
Bliksemdraad = GW / C H_{mast} -	0,512	m =	49,488	m	0,761	m	
1e traverse - 380C1F1 F2 +	8,5	m =	41	m	0	m	
2e traverse - 380C1F2 F3 +	8,5	m =	32,5	m	0	m	
3e traverse - 380C1F3			24	m	0	m	
Passieve lijn = Comp C. F3 -	7,5	m =	16,5	m	2,087	m	

Uit mast (excl belastingsfactoren) N [kN]	V [kN]	M [kNm]	Uit lijnen (incl belastingsfactoren) Nmin [kN]	Nmax [kN]	Vmax [kN]	Mlangs;max [kNm]	Mdwars;max [kNm]
565	86	2042	38	102	948	30001	3814

Belastingen uit lijnen / Belasting uit mast

			M_{langs}	M_{dwars}	N	V_{langs}	V_{dwars}	N	V	M
Perm load 1,2	0 deg	1a	-15909	710	51	-499	22	565	86	2042
		1b	-18834	833	51	-590	26	565	16	383
		3	-27639	1250	101	-878	38	565	24	574
		4	-18947	842	62	-595	26	565	16	383
		6	-17409	771	57	-546	24			
	45 deg	1a	-19888	2332	51	-618	71	565	86	2042
		1b	-19026	1131	51	-596	35	565	16	383
		3	-28365	2175	101	-899	67	565	24	574
		4	-19088	1138	62	-599	35	565	16	383
	90 deg	1a	-25969	**3814**	51	-802	**116**	565	86	2042
		1b	-19482	1394	51	-610	43	565	16	383
		3	**-30001**	2997	**102**	**-948**	92	565	24	574
		4	-19434	1396	62	-610	43	565	16	383
	-45 deg	1a	-18863	2054	51	-587	63	565	86	2042
		1b	-18968	1082	51	-594	33	565	16	383
		3	-28150	2022	101	-893	62	565	24	574
		4	-19045	1089	62	-598	34	565	16	383
Perm load 0,9	0 deg	1a	**-12726**	568	38	**-399**	18	424	86	2042
		1b	-15550	687	**38**	-487	21	424	16	383
		3	-25037	1134	89	-796	35	424	24	574
		4	-15952	709	49	-501	22	424	16	383
		6	-12726	**563**	38	-399	**17**			
	45 deg	1a	-17898	2242	38	-554	69	424	86	2042
		1b	-15835	989	**38**	-496	31	424	16	383
		3	-25914	2066	89	-822	63	424	24	574
		4	-16146	1007	49	-507	31	424	16	383
	90 deg	1a	-24777	3759	38	-764	115	424	86	2042
		1b	-16485	1261	38	-515	39	424	16	383
		3	-27832	2899	89	-879	89	424	24	574
		4	-16608	1270	49	-521	39	424	16	383
	-45 deg	1a	-16651	1955	38	-517	60	424	86	2042
		1b	-15750	939	**38**	-493	29	424	16	383
		3	-25657	1911	89	-815	59	424	24	574
		4	-16087	958	49	-505	30	424	16	383

Totaal

regel			Loadcase	M_{langs}	M_{dwars}	N	V_{langs}	V_{dwars}	Totaal moment		M_{langs}	M_{dwars}	N	V_{langs}	V_{dwars}	Totaal mom	Nmin
1	Perm load 1,2	0 deg	1a	17951	710	616	585	22	17965,13	1							
2	Perm load 1,2	0 deg	1b	19217	833	616	607	26	19234,83	2							
3	Perm load 1,2	0 deg	3	28213	1250	666	902	38	28240,6	3							
4	Perm load 1,2	0 deg	4	19330	842	627	611	26	19348,08	4							
5	Perm load 1,2	0 deg	6							5							
6										6							
7	Perm load 1,2	45 deg	1a	21332	3776	616	679	132	21663,79	7							
8	Perm load 1,2	45 deg	1b	19296	1402	616	607	46	19347,28	8							
9	Perm load 1,2	45 deg	3	28771	2582	666	916	84	28886,4	9							
10	Perm load 1,2	45 deg	4	19359	1408	627	611	46	19410,09	10							
11										11							
12	Perm load 1,2	90 deg	1a	28011	3814	616	888	202	28269,27	12		x			x		
13	Perm load 1,2	90 deg	1b	19865	1394	616	626	59	19913,47	13							
14	Perm load 1,2	90 deg	3	30575	2997	667	972	116	30721,56	14	x		x	x		x	
15	Perm load 1,2	90 deg	4 Construct	19817	1396	627	626	59	19865,67	15							
16										16							
17	Perm load 1,2	-45 deg	1a	20307	3498	616	648	124	20606,05	17							
18	Perm load 1,2	-45 deg	1b	19239	1353	616	606	45	19286,13	18							
19	Perm load 1,2	-45 deg	3	28556	2428	666	910	79	28658,71	19							
20	Perm load 1,2	-45 deg	4	19316	1360	627	610	45	19363,6	20							
21										21							
22	Perm load 0,9	0 deg	1a	14768	568	462	485	18	14779,07	22							
23	Perm load 0,9	0 deg	1b	15933	687	462	503	21	15947,92	23							x
24	Perm load 0,9	0 deg	3	25612	1134	513	821	35	25636,67	24							
25	Perm load 0,9	0 deg	4	16334	709	473	518	22	16349,82	25							
26	Perm load 0,9	0 deg	6							26							
27										27							
28	Perm load 0,9	45 deg	1a	19342	3686	462	615	129	19689,84	28							
29	Perm load 0,9	45 deg	1b	16106	1260	462	507	42	16154,84	29							x
30	Perm load 0,9	45 deg	3	26320	2472	513	839	81	26435,73	30							
31	Perm load 0,9	45 deg	4 Construct	16417	1277	473	519	42	16466,2	31							
32										32							
33	Perm load 0,9	90 deg	1a	26819	3759	462	850	201	27081,42	33							
34	Perm load 0,9	90 deg	1b	16868	1261	462	531	55	16914,96	34							
35	Perm load 0,9	90 deg	3	28406	2899	513	904	113	28553,46	35							
36	Perm load 0,9	90 deg	4	16991	1270	473	537	55	17038,02	36							
37										37							
38	Perm load 0,9	-45 deg	1a	18095	3399	462	577	121	18411,31	38							
39	Perm load 0,9	-45 deg	1b	16021	1210	462	505	40	16066,8	39							x
40	Perm load 0,9	-45 deg	3	26063	2317	513	832	76	26165,56	40							
41	Perm load 0,9	-45 deg	4	16358	1228	473	517	41	16404,14	41							
			Max	30575	3814	667 462	972	202	30722								

samenvatting

	Mast	Bijlage		Wind	Loadcase	M_{langs}	M_{dwars}	N	V_{langs}	V_{dwars}
12	W2E350	10-E	Perm load :	90 deg	1a	28011	3814	616	888	202
14	W2E350	10-E	Perm load :	90 deg	3	30575	2997	667	972	116
29	W2E350	10-E	Perm load (	45 deg	1b	16106	1260	462	507	42

W2E350 TOWER (rev 6.0, date: 05-11-2012) AppendixE

Loadcases for tower strength (ultimate limit state)

Loadcase according	Attachment point	**BACK** [N]	[N]	[N]	[N]	**AHEAD** [N]	[N]	Totaal Vert [kN]	Dwars [kN]	Langs [kN]	Belastingen op mastvoet, per lijn M_{langs}	M_{dwars}	N	V_{langs}	V_{dwars}
1a	380C1F1 /	14907	6453	-146657	0	0	0	14,907	6,453	-146,657	-6012,94	264,573	14,907	-146,657	6,453
Wind, 10 dgr	380C1F2 /	14907	6448	-146657	0	0	0	14,907	6,448	-146,657	-4766,35	209,56	14,907	-146,657	6,448
Permanent loads yg=	380C1F3 /	14907	6443	-146657	0	0	0	14,907	6,443	-146,657	-3519,77	154,632	14,907	-146,657	6,443
Wind angle: 0 dgr	GW / opgv	1947	849	-19242	0	0	0	1,947	0,849	-19,242	-952,248	43,49698	1,947	-19,242	0,849
	Comp. gl	4038	1753	-39867	0	0	0	4,038	1,753	-39,867	-657,806	37,35181	4,038	-39,867	1,753
1b	380C1F1 /	14900	7606	-173968	0	0	0	14,9	7,606	-173,968	-7132,69	311,846	14,9	-173,968	7,606
Wind, -20 dgr	380C1F2 /	14900	7605	-173968	0	0	0	14,9	7,605	-173,968	-5653,96	247,1625	14,9	-173,968	7,605
Permanent loads yg=	380C1F3 /	14900	7603	-173968	0	0	0	14,9	7,603	-173,968	-4175,23	182,472	14,9	-173,968	7,603
Wind angle: 0 dgr	GW / opgv	1946	984	-22489	0	0	0	1,946	0,984	-22,489	-1112,94	50,1771	1,946	-22,489	0,984
	Comp. gl	4036	2011	-46005	0	0	0	4,036	2,011	-46,005	-759,083	41,60463	4,036	-46,005	2,011
3	380C1F1 /	25691	10255	-234233	0	0	0	25,691	10,255	-234,233	-9603,55	420,455	25,691	-234,233	10,255
Wind+ice, -5 dgr	380C1F2 /	25691	10252	-234233	0	0	0	25,691	10,252	-234,233	-7612,57	333,19	25,691	-234,233	10,252
Permanent loads yg=	380C1F3 /	25691	10249	-234233	0	0	0	25,691	10,249	-234,233	-5621,59	245,976	25,691	-234,233	10,249
Wind angle: 0 dgr	GW / opgv	8083	2542	-58024	0	0	0	8,083	2,542	-58,024	-2871,49	131,9497	8,083	-58,024	2,542
	Comp. gl	16332	5118	-116933	0	0	0	16,332	5,118	-116,933	-1929,39	118,5319	16,332	-116,933	5,118
4	380C1F1 /	17913	7550	-172685	0	0	0	17,913	7,55	-172,685	-7080,09	309,55	17,913	-172,685	7,55
Construction/maintenance, +5 c		17913	7549	-172685	0	0	0	17,913	7,549	-172,685	-5612,26	245,3425	17,913	-172,685	7,549
Permanent loads yg=	380C1F3 /	17913	7547	-172685	0	0	0	17,913	7,547	-172,685	-4144,44	181,128	17,913	-172,685	7,547
Wind angle: 0 dgr	GW / opgv	2699	1108	-25331	0	0	0	2,699	1,108	-25,331	-1253,58	56,88664	2,699	-25,331	1,108
	Comp. gl	5542	2269	-51910	0	0	0	5,542	2,269	-51,91	-856,515	49,00465	5,542	-51,91	2,269
6	380C1F1 /	16772	7005	-160442	0	0	0	16,772	7,005	-160,442	-6578,12	287,205	16,772	-160,442	7,005
Permanent, +10 dgr	380C1F2 /	16772	7005	-160442	0	0	0	16,772	7,005	-160,442	-5214,37	227,6625	16,772	-160,442	7,005
Permanent loads yg=	380C1F3 /	16772	7005	-160442	0	0	0	16,772	7,005	-160,442	-3850,61	168,12	16,772	-160,442	7,005
	GW / opgv	2190	922	-21111	0	0	0	2,19	0,922	-21,111	-1044,74	47,29453	2,19	-21,111	0,922
	Comp. gl	4543	1908	-43708	0	0	0	4,543	1,908	-43,708	-721,182	40,96324	4,543	-43,708	1,908
1a	380C1F1 /	14911	22378	-186711	0	0	0	14,911	22,378	-186,711	-7655,15	917,498	14,911	-186,711	22,378
Wind, 10 dgr	380C1F2 /	14911	20820	-180779	0	0	0	14,911	20,82	-180,779	-5875,32	676,65	14,911	-180,779	20,82
Permanent loads yg=	380C1F3 /	14910	18812	-173464	0	0	0	14,91	18,812	-173,464	-4163,14	451,488	14,91	-173,464	18,812
Wind angle: 45 dgr	GW / opgv	1948	3732	-28005	0	0	0	1,948	3,732	-28,005	-1385,91	186,1716	1,948	-28,005	3,732
	Comp. gl	4039	5561	-49016	0	0	0	4,039	5,561	-49,016	-808,764	100,1859	4,039	-49,016	5,561
1b	380C1F1 /	14900	10523	-175912	0	0	0	14,9	10,523	-175,912	-7212,39	431,443	14,9	-175,912	10,523
Wind, -20 dgr	380C1F2 /	14900	10249	-175566	0	0	0	14,9	10,249	-175,566	-5705,9	333,0925	14,9	-175,566	10,249
Permanent loads yg=	380C1F3 /	14900	9894	-175167	0	0	0	14,9	9,894	-175,167	-4204,01	237,456	14,9	-175,167	9,894
Wind angle: 45 dgr	GW / opgv	1946	1505	-22980	0	0	0	1,946	1,505	-22,98	-1137,23	75,96035	1,946	-22,98	1,505
	Comp. gl	4036	2711	-46434	0	0	0	4,036	2,711	-46,434	-766,161	53,15463	4,036	-46,434	2,711
3	380C1F1 /	25692	18492	-241527	0	0	0	25,692	18,492	-241,527	-9902,61	758,172	25,692	-241,527	18,492
Wind+ice, -5 dgr	380C1F2 /	25692	17711	-240261	0	0	0	25,692	17,711	-240,261	-7808,48	575,6075	25,692	-240,261	17,711
Permanent loads yg=	380C1F3 /	25692	16704	-238783	0	0	0	25,692	16,704	-238,783	-5730,79	400,896	25,692	-238,783	16,704
Wind angle: 45 dgr	GW / opgv	8084	5196	-59918	0	0	0	8,084	5,196	-59,918	-2965,22	263,2916	8,084	-59,918	5,196
	Comp. gl	16332	8689	-118643	0	0	0	16,332	8,689	-118,643	-1957,61	177,4534	16,332	-118,643	8,689
4	380C1F1 /	17914	10449	-174163	0	0	0	17,914	10,449	-174,163	-7140,68	428,409	17,914	-174,163	10,449
Construction/maintenance, +5 c		17914	10177	-173897	0	0	0	17,914	10,177	-173,897	-5651,65	330,7525	17,914	-173,897	10,177
Permanent loads yg=	380C1F3 /	17913	9827	-173590	0	0	0	17,913	9,827	-173,59	-4166,16	235,848	17,913	-173,59	9,827
Wind angle: 45 dgr	GW / opgv	2699	1621	-25638	0	0	0	2,699	1,621	-25,638	-1268,77	82,27399	2,699	-25,638	1,621
	Comp. gl	5542	2962	-52177	0	0	0	5,542	2,962	-52,177	-860,921	60,43915	5,542	-52,177	2,962
1a	380C1F1 /	14918	36905	-246735	0	0	0	14,918	36,905	-246,735	-10116,1	1513,105	14,918	-246,735	36,905
Wind, 10 dgr	380C1F2 /	14916	33977	-234344	0	0	0	14,916	33,977	-234,344	-7616,18	1104,253	14,916	-234,344	33,977
Permanent loads yg=	380C1F3 /	14915	30176	-218354	0	0	0	14,915	30,176	-218,354	-5240,5	724,224	14,915	-218,354	30,176
Wind angle: 90 dgr	GW / opgv	1949	6328	-39342	0	0	0	1,949	6,328	-39,342	-1946,96	314,6433	1,949	-39,342	6,328
	Comp. gl	4040	9059	-63577	0	0	0	4,04	9,059	-63,577	-1049,02	157,905	4,04	-63,577	9,059
1b	380C1F1 /	14900	13102	-180525	0	0	0	14,9	13,102	-180,525	-7401,53	537,182	14,9	-180,525	13,102
Wind, -20 dgr	380C1F2 /	14900	12577	-179401	0	0	0	14,9	12,577	-179,401	-5830,53	408,7525	14,9	-179,401	12,577
Permanent loads yg=	380C1F3 /	14900	11900	-178084	0	0	0	14,9	11,9	-178,084	-4274,02	285,6	14,9	-178,084	11,9
Wind angle: 90 dgr	GW / opgv	1946	1973	-24097	0	0	0	1,946	1,973	-24,097	-1192,51	99,12073	1,946	-24,097	1,973
	Comp. gl	4037	3328	-47464	0	0	0	4,037	3,328	-47,464	-783,156	63,33722	4,037	-47,464	3,328
3	380C1F1 /	25695	25846	-257733	0	0	0	25,695	25,846	-257,733	-10567,1	1059,686	25,695	-257,733	25,846
Wind+ice, -5 dgr	380C1F2 /	25694	24346	-253893	0	0	0	25,694	24,346	-253,893	-8251,52	791,245	25,694	-253,893	24,346
Permanent loads yg=	380C1F3 /	25693	22414	-249311	0	0	0	25,693	22,414	-249,311	-5983,46	537,936	25,693	-249,311	22,414
Wind angle: 90 dgr	GW / opgv	8086	7537	-64132	0	0	0	8,086	7,537	-64,132	-3173,76	379,1445	8,086	-64,132	7,537
	Comp. gl	16334	11802	-122723	0	0	0	16,334	11,802	-122,723	-2024,93	228,8221	16,334	-122,723	11,802
4	380C1F1 /	17914	12984	-177756	0	0	0	17,914	12,984	-177,756	-7288	532,344	17,914	-177,756	12,984
Construction/maintenance, +5 c		17914	12469	-176874	0	0	0	17,914	12,469	-176,874	-5748,41	405,2425	17,914	-176,874	12,469
Permanent loads yg=	380C1F3 /	17914	11804	-175846	0	0	0	17,914	11,804	-175,846	-4220,3	283,296	17,914	-175,846	11,804
Wind angle: 90 dgr	GW / opgv	2699	2073	-26371	0	0	0	2,699	2,073	-26,371	-1305,05	104,6426	2,699	-26,371	2,073
	Comp. gl	5542	3563	-52845	0	0	0	5,542	3,563	-52,845	-871,943	70,35565	5,542	-52,845	3,563
1a	380C1F1 /	14910	19648	-176459	0	0	0	14,91	19,648	-176,459	-7234,82	805,568	14,91	-176,459	19,648
Wind, 10 dgr	380C1F2 /	14910	18357	-171869	0	0	0	14,91	18,357	-171,869	-5585,74	596,6025	14,91	-171,869	18,357
Permanent loads yg=	380C1F3 /	14909	16696	-166279	0	0	0	14,909	16,696	-166,279	-3990,7	400,704	14,909	-166,279	16,696
Wind angle: -45 dgr	GW / opgv	1947	3239	-25919	0	0	0	1,947	3,239	-25,919	-1282,68	161,7733	1,947	-25,919	3,239
	Comp. gl	4039	4907	-46614	0	0	0	4,039	4,907	-46,614	-769,131	89,39489	4,039	-46,614	4,907
1b	380C1F1 /	14900	10042	-175327	0	0	0	14,9	10,042	-175,327	-7188,41	411,722	14,9	-175,327	10,042
Wind, -20 dgr	380C1F2 /	14900	9814	-175083	0	0	0	14,9	9,814	-175,083	-5690,2	318,955	14,9	-175,083	9,814
Permanent loads yg=	380C1F3 /	14900	9518	-174802	0	0	0	14,9	9,518	-174,802	-4195,25	228,432	14,9	-174,802	9,518
Wind angle: -45 dgr	GW / opgv	1946	1418	-22834	0	0	0	1,946	1,418	-22,834	-1130,01	71,65489	1,946	-22,834	1,418
	Comp. gl	4036	2596	-46305	0	0	0	4,036	2,596	-46,305	-764,033	51,25713	4,036	-46,305	2,596
3	380C1F1 /	25692	17124	-239377	0	0	0	25,692	17,124	-239,377	-9814,46	702,084	25,692	-239,377	17,124
Wind+ice, -5 dgr	380C1F2 /	25691	16475	-238474	0	0	0	25,691	16,475	-238,474	-7750,41	535,4375	25,691	-238,474	16,475
Permanent loads yg=	380C1F3 /	25691	15638	-237424	0	0	0	25,691	15,638	-237,424	-5698,18	375,312	25,691	-237,424	15,638
Wind angle: -45 dgr	GW / opgv	8084	4757	-59357	0	0	0	8,084	4,757	-59,357	-2937,46	241,5663	8,084	-59,357	4,757
0 Comp. gl		16332	8104	-118124	0	0	0	16,332	8,104	-118,124	-1949,05	167,8009	16,332	-118,124	8,104
4	380C1F1 /	17913	9973	-173713	0	0	0	17,913	9,973	-173,713	-7122,23	408,893	17,913	-173,713	9,973
Construction/maintenance, +5 c		17913	9747	-173527	0	0	0	17,913	9,747	-173,527	-5639,63	316,7775	17,913	-173,527	9,747
Permanent loads yg=	380C1F3 /	17913	9454	-173311	0	0	0	17,913	9,454	-173,311	-4159,46	226,896	17,913	-173,311	9,454
Wind angle: -45 dgr	GW / opgv	2699	1537	-25545	0	0	0	2,699	1,537	-25,545	-1264,17	78,117	2,699	-25,545	1,537
	Comp. gl	5542	2849	-52094	0	0	0	5,542	2,849	-52,094	-859,551	58,57465	5,542	-52,094	2,849
1a	380C1F1 /	11178	5175	-117394	0	0	0	11,178	5,175	-117,394	-4813,15	212,175	11,178	-117,394	5,175
Wind, 10 dgr	380C1F2 /	11178	5171	-117394	0	0	0	11,178	5,171	-117,394	-3815,31	168,0575	11,178	-117,394	5,171
Permanent loads yg=	380C1F3 /	11178	5165	-117394	0	0	0	11,178	5,165	-117,394	-2817,46	123,96	11,178	-117,394	5,165
Wind angle: 0 dgr	GW / opgv	1460	676	-15289	0	0	0	1,46	0,676	-15,289	-756,622	34,56495	1,46	-15,289	0,676
	Comp. gl	3028	1398	-31734	0	0	0	3,028	1,398	-31,734	-523,611	29,38644	3,028	-31,734	1,398
1b	380C1F1 /	11172	6289	-143819	0	0	0	11,172	6,289	-143,819	-5896,58	257,849	11,172	-143,819	6,289
Wind, -20 dgr	380C1F2 /	11172	6288	-143819	0	0	0	11,172	6,288	-143,819	-4674,12	204,36	11,172	-143,819	6,288
Permanent loads yg=	380C1F3 /	11172	6287	-143819	0	0	0	11,172	6,287	-143,819	-3451,66	150,888	11,172	-143,819	6,287
Wind angle: 0 dgr	GW / opgv	1459	803	-18356	0	0	0	1,459	0,803	-18,356	-908,402	40,84916	1,459	-18,356	0,803
	Comp. gl	3027	1642	-37544	0	0	0	3,027	1,642	-37,544	-619,476	33,41035	3,027	-37,544	1,642
3	380C1F1 /	21959	9183	-209682	0	0	0	21,959	9,183	-209,682	-8596,96	376,503	21,959	-209,682	9,183
Wind+ice, -5 dgr	380C1F2 /	21959	9180	-209682	0	0	0	21,959	9,18	-209,682	-6814,67	298,35	21,959	-209,682	9,18
Permanent loads yg=	380C1F3 /	21959	9177	-209682	0	0	0	21,959	9,177	-209,682	-5032,37	220,248	21,959	-209,682	9,177
Wind angle: 0 dgr	GW / opgv	7595	2434	-55540	0	0	0	7,595	2,434	-55,54	-2748,56	126,2336	7,595	-55,54	2,434
	Comp. gl	15319	4894	-111800	0	0	0	15,319	4,894	-111,8	-1844,7	112,7218	15,319	-111,8	4,894
4	380C1F1 /	14184	6342	-145028	0	0	0	14,184	6,342	-145,028	-5946,15	260,022	14,184	-145,028	6,342
Construction/maintenance, +5 c		14184	6341	-145028	0	0	0	14,184	6,341	-145,028	-4713,41	206,0825	14,184	-145,028	6,341
Permanent loads yg=	380C1F3 /	14184	6340	-145028	0	0	0	14,184	6,34	-145,028	-3480,67	152,16	14,184	-145,028	6,34
Wind angle: 0 dgr	GW / opgv	2211	951	-21752	0	0	0	2,211	0,951	-21,752	-1076,46	48,74566	2,211	-21,752	0,951
	Comp. gl	4531	1947	-44539	0	0	0	4,531	1,947	-44,539	-734,894	41,5817	4,531	-44,539	1,947
6	380C1F1 /	11178	5126	-117395	0	0	0	11,178	5,126	-117,395	-4813,2	210,166	11,178	-117,395	5,126
Permanent, +10 dgr	380C1F2 /	11178	5126	-117395	0	0	0	11,178	5,126	-117,395	-3815,34	166,595	11,178	-117,395	5,126

Belasting op mastvoet, belastinggeval

	M_{langs}	M_{dwars}	N	V_{langs}	V_{dwars}
1a Wind angle: 0 dgr	-15909,1	709,6138	50,706	-499,08	21,946
1b Wind angle: 0 dgr	-18833,9	833,2622	50,682	-590,398	25,809
3 Wind angle: 0 dgr	-27638,6	1250,103	101,488	-877,656	38,416
4 Wind angle: 0 dgr	-18946,9	841,9118	61,98	-595,296	26,023
6 0	-17409	771,2453	57,049	-546,145	23,845
1a Wind angle: 45 dgr	-19888,3	2331,994	50,719	-617,975	71,303
1b Wind angle: 45 dgr	-19025,7	1131,106	50,682	-596,059	34,882
3 Wind angle: 45 dgr	-28364,7	2175,42	101,492	-899,132	66,792
4 Wind angle: 45 dgr	-19088,2	1137,723	61,982	-599,465	35,036
1a Wind angle: 90 dgr	-25968,8	3814,13	50,738	-802,352	116,445
1b Wind angle: 90 dgr	-19481,7	1393,992	50,683	-609,571	42,88
3 Wind angle: 90 dgr	-30000,7	2996,834	101,502	-947,792	91,945
4 Wind angle: 90 dgr	-19433,7	1395,881	61,983	-609,692	42,893
1a Wind angle: -45 dgr	-18863,1	2054,043	50,715	-587,14	62,847
1b Wind angle: -45 dgr	-18967,9	1082,021	50,682	-594,351	33,388
3 Wind angle: -45 dgr	-28149,5	2022,201	101,49	-892,756	62,098
4 Wind angle: -45 dgr	-19045	1089,258	61,98	-598,19	33,56
1a Wind angle: 0 dgr	-12726,1	568,1439	38,022	-399,205	17,585
1b Wind angle: 0 dgr	-15550,2	687,3565	38,002	-487,357	21,309
3 Wind angle: 0 dgr	-25037,3	1134,056	88,791	-796,386	34,868
4 Wind angle: 0 dgr	-15951,6	708,5919	49,294	-501,375	21,921
6 0	-12726,2	563,1425	38,022	-399,208	17,432

Permanent loads yg=	380C1F3 / 11178	5126	-117395	0	0	0	11,178	5,126	-117,395	-2817,48	123,024	11,178	-117,395	5,126											
	GW / opgv	1460	668	-15289	0	0	0	1,46	0,668	-15,289	-756,622	34,16904	1,46	-15,289	0,668										
	Comp. gl	3028	1386	-31734	0	0	0	3,028	1,386	-31,734	-523,611	29,18844	3,028	-31,734	1,386										
1a	380C1F1 / 11182	21612	-169225	0	0	0	11,182	21,612	-169,225	-6938,23	886,092	11,182	-169,225	21,612	1a	-17897,8	2242,359	38,034	-554,366	68,518					
Wind, 10 dgr	380C1F2 / 11181	20003	-162117	0	0	0	11,181	20,003	-162,117	-5268,8	650,0975	11,181	-162,117	20,003	Wind angle: 45 dgr										
Permanent loads yg=	380C1F3 / 11181	17924	-153158	0	0	0	11,181	17,924	-153,158	-3675,79	430,176	11,181	-153,158	17,924											
Wind angle: 45 dgr	GW / opgv	1461	3650	-26136	0	0	0	1,461	3,65	-26,136	-1293,42	181,743	1,461	-26,136	3,65										
	Comp. gl	3029	5329	-43730	0	0	0	3,029	5,329	-43,73	-721,545	94,25002	3,029	-43,73	5,329										
1b	380C1F1 / 11172	9248	-146703	0	0	0	11,172	9,248	-146,703	-6014,82	379,168	11,172	-146,703	9,248	1b	-15834,9	989,2711	38,002	-495,77	30,502					
Wind, -20 dgr	380C1F2 / 11172	8966	-146199	0	0	0	11,172	8,966	-146,199	-4751,47	291,395	11,172	-146,199	8,966	Wind angle: 45 dgr										
Permanent loads yg=	380C1F3 / 11172	8603	-145613	0	0	0	11,172	8,603	-145,613	-3494,71	206,472	11,172	-145,613	8,603											
Wind angle: 45 dgr	GW / opgv	1459	1334	-19073	0	0	0	1,459	1,334	-19,073	-943,885	67,12729	1,459	-19,073	1,334										
	Comp. gl	3027	2351	-38182	0	0	0	3,027	2,351	-38,182	-630,003	45,10885	3,027	-38,182	2,351										
3	380C1F1 / 21960	17492	-218645	0	0	0	21,96	17,492	-218,645	-8964,45	717,172	21,96	-218,645	17,492	3	-25913,8	2065,793	88,795	-822,33	63,435					
Wind+ice, -5 dgr	380C1F2 / 21960	16699	-217109	0	0	0	21,96	16,699	-217,109	-7056,04	542,7175	21,96	-217,109	16,699	Wind angle: 45 dgr										
Permanent loads yg=	380C1F3 / 21960	15678	-215308	0	0	0	21,96	15,678	-215,308	-5167,39	376,272	21,96	-215,308	15,678											
Wind angle: 45 dgr	GW / opgv	7596	5094	-57597	0	0	0	7,596	5,094	-57,597	-2850,36	257,8724	7,596	-57,597	5,094										
	Comp. gl	15319	8472	-113671	0	0	0	15,319	8,472	-113,671	-1875,57	171,7588	15,319	-113,671	8,472										
4	380C1F1 / 14184	9265	-147069	0	0	0	14,184	9,265	-147,069	-6029,83	379,865	14,184	-147,069	9,265	4	-16145,8	1006,719	49,294	-507,113	31,002					
Construction/maintenance, +5 d	14184	8990	-146707	0	0	0	14,184	8,99	-146,707	-4767,98	292,175	14,184	-146,707	8,99	Wind angle: 45 dgr										
Permanent loads yg=	380C1F3 / 14184	8634	-146288	0	0	0	14,184	8,634	-146,288	-3510,91	207,216	14,184	-146,288	8,634											
Wind angle: 45 dgr	GW / opgv	2211	1469	-22154	0	0	0	2,211	1,469	-22,154	-1096,36	74,38044	2,211	-22,154	1,469										
	Comp. gl	4531	2644	-44895	0	0	0	4,531	2,644	-44,895	-740,768	53,0822	4,531	-44,895	2,644										
1a	380C1F1 / 11187	36459	-236577	0	0	0	11,187	36,459	-236,577	-9699,66	1494,819	11,187	-236,577	36,459	1a	-24777,2	3759,359	38,049	-763,922	114,759					
Wind, 10 dgr	380C1F2 / 11186	33485	-223131	0	0	0	11,186	33,485	-223,131	-7251,76	1088,263	11,186	-223,131	33,485	Wind angle: 90 dgr										
Permanent loads yg=	380C1F3 / 11185	29613	-205504	0	0	0	11,185	29,613	-205,504	-4932,1	710,712	11,185	-205,504	29,613											
Wind angle: 90 dgr	GW / opgv	1461	6284	-38347	0	0	0	1,461	6,284	-38,347	-1897,72	312,0944	1,461	-38,347	6,284										
	Comp. gl	3030	8918	-60363	0	0	0	3,03	8,918	-60,363	-995,99	153,4706	3,03	-60,363	8,918										
1b	380C1F1 / 11173	11911	-153273	0	0	0	11,173	11,911	-153,273	-6284,19	488,351	11,173	-153,273	11,911	1b	-16485	1260,537	38,005	-515,077	38,75					
Wind, -20 dgr	380C1F2 / 11173	11366	-151695	0	0	0	11,173	11,366	-151,695	-4930,09	369,395	11,173	-151,695	11,366	Wind angle: 90 dgr										
Permanent loads yg=	380C1F3 / 11173	10665	-149830	0	0	0	11,173	10,665	-149,83	-3595,92	255,96	11,173	-149,83	10,665											
Wind angle: 90 dgr	GW / opgv	1459	1821	-20621	0	0	0	1,459	1,821	-20,621	-1020,49	91,22795	1,459	-20,621	1,821										
	Comp. gl	3027	2987	-39658	0	0	0	3,027	2,987	-39,658	-654,357	55,60285	3,027	-39,658	2,987										
3	380C1F1 / 21964	24977	-237878	0	0	0	21,964	24,977	-237,878	-9753	1024,057	21,964	-237,878	24,977	3	-27831,6	2899,47	88,808	-879,434	88,955					
Wind+ice, -5 dgr	380C1F2 / 21963	23449	-233383	0	0	0	21,963	23,449	-233,383	-7584,95	762,0925	21,963	-233,383	23,449	Wind angle: 90 dgr										
Permanent loads yg=	380C1F3 / 21962	21481	-227974	0	0	0	21,962	21,481	-227,974	-5471,38	515,544	21,962	-227,974	21,481											
Wind angle: 90 dgr	GW / opgv	7598	7449	-62112	0	0	0	7,598	7,449	-62,112	-3073,8	374,4182	7,598	-62,112	7,449										
	Comp. gl	15321	11599	-118087	0	0	0	15,321	11,599	-118,087	-1948,44	223,3584	15,321	-118,087	11,599										
4	380C1F1 / 14184	11854	-151890	0	0	0	14,184	11,854	-151,89	-6227,49	486,014	14,184	-151,89	11,854	4	-16607,8	1269,906	49,295	-520,801	39,009					
Construction/maintenance, +5 d	14184	11326	-150717	0	0	0	14,184	11,326	-150,717	-4898,3	368,095	14,184	-150,717	11,326	Wind angle: 90 dgr										
Permanent loads yg=	380C1F3 / 14184	10646	-149342	0	0	0	14,184	10,646	-149,342	-3584,21	255,504	14,184	-149,342	10,646											
Wind angle: 90 dgr	GW / opgv	2212	1929	-23090	0	0	0	2,212	1,929	-23,09	-1142,68	97,14568	2,212	-23,09	1,929										
	Comp. gl	4531	3254	-45762	0	0	0	4,531	3,254	-45,762	-755,073	63,1472	4,531	-45,762	3,254										
1a	380C1F1 / 11181	18791	-156855	0	0	0	11,181	18,791	-156,855	-6431,06	770,431	11,181	-156,855	18,791	1a	-16651	1954,826	38,031	-516,658	59,765					
Wind, 10 dgr	380C1F2 / 11181	17452	-151172	0	0	0	11,181	17,452	-151,172	-4913,09	567,19	11,181	-151,172	17,452	Wind angle: -45 dgr										
Permanent loads yg=	380C1F3 / 11180	15726	-144105	0	0	0	11,18	15,726	-144,105	-3458,52	377,424	11,18	-144,105	15,726											
Wind angle: -45 dgr	GW / opgv	1460	3144	-23755	0	0	0	1,46	3,144	-23,755	-1175,59	156,7013	1,46	-23,755	3,144										
	Comp. gl	3029	4652	-40771	0	0	0	3,029	4,652	-40,771	-672,722	83,07952	3,029	-40,771	4,652										
1b	380C1F1 / 11172	8754	-145848	0	0	0	11,172	8,754	-145,848	-5979,77	358,914	11,172	-145,848	8,754	1b	-15750,5	939,0112	38,002	-493,271	28,973					
Wind, -20 dgr	380C1F2 / 11172	8521	-145491	0	0	0	11,172	8,521	-145,491	-4728,46	276,9325	11,172	-145,491	8,521	Wind angle: -45 dgr										
Permanent loads yg=	380C1F3 / 11172	8220	-145076	0	0	0	11,172	8,22	-145,076	-3481,82	197,28	11,172	-145,076	8,22											
Wind angle: -45 dgr	GW / opgv	1459	1245	-18864	0	0	0	1,459	1,245	-18,864	-933,542	62,72286	1,459	-18,864	1,245										
	Comp. gl	3027	2233	-37992	0	0	0	3,027	2,233	-37,992	-626,868	43,16185	3,027	-37,992	2,233										
3	380C1F1 / 21960	16103	-216033	0	0	0	21,96	16,103	-216,033	-8857,35	660,223	21,96	-216,033	16,103	3	-25656,7	1910,748	88,795	-814,704	58,686					
Wind+ice, -5 dgr	380C1F2 / 21960	15446	-214930	0	0	0	21,96	15,446	-214,93	-6985,23	501,995	21,96	-214,93	15,446	Wind angle: -45 dgr										
Permanent loads yg=	380C1F3 / 21960	14599	-213644	0	0	0	21,96	14,599	-213,644	-5127,46	350,376	21,96	-213,644	14,599											
Wind angle: -45 dgr	GW / opgv	7596	4654	-56992	0	0	0	7,596	4,654	-56,992	-2820,42	236,0977	7,596	-56,992	4,654										
0 Comp. gl		15319	7884	-113105	0	0	0	15,319	7,884	-113,105	-1866,23	162,0568	15,319	-113,105	7,884										
4	380C1F1 / 14184	8782	-146456	0	0	0	14,184	8,782	-146,456	-6004,7	360,062	14,184	-146,456	8,782	4	-16087,4	957,5282	49,294	-505,383	29,505					
Construction/maintenance, +5 d	14184	8553	-146201	0	0	0	14,184	8,553	-146,201	-4751,53	277,9725	14,184	-146,201	8,553	Wind angle: -45 dgr										
Permanent loads yg=	380C1F3 / 14184	8257	-145906	0	0	0	14,184	8,257	-145,906	-3501,74	198,168	14,184	-145,906	8,257											
Wind angle: -45 dgr	GW / opgv	2211	1383	-22034	0	0	0	2,211	1,383	-22,034	-1090,42	70,12448	2,211	-22,034	1,383										
	Comp. gl	4531	2530	-44786	0	0	0	4,531	2,53	-44,786	-738,969	51,2012	4,531	-44,786	2,53										

W2E350 10-E2

Hoogte mast		Ber & bijlage	50 m
Hoogte onderste stroomdraad (F3)			24 m

			Hoogte	Excentriciteit ophanging t.o.v. hart mast
Bliksemdraad = GW / OPGW	H_{boat} -	0,512 m =	49,488 m	0,761 m
1e traverse - 380C1F1	F2 +	8,5 m =	41 m	0 m
2e traverse - 380C1F2	F3 +	8,5 m =	32,5 m	0 m
3e traverse - 380C1F3			24 m	0 m
Passieve lijn = Comp C.	F3 -	7,5 m =	16,5 m	2,087 m

Uit mast
ULS (incl bel factoren)

N	V	M
[kN]	[kN]	[kNm]
565	86	2042

Uit lijnen
SLS

Nmin	Nmax	Vmax	Mlangs;max	Mdwars;max
[kN]	[kN]	[kN]	[kNm]	[kNm]
42	76	764	24180	2672

Belastingen uit lijnen

			M_{langs}	M_{dwars}	N	V_{langs}	V_{dwars}
SLS	0 deg	1a	**-13818**	**615**	42	**-433**	**19**
		1b	-16680	737	**42**	-523	23
		3	-22625	1018	76	-718	31
		4	-16078	713	50	-505	22
	45 deg	1a	-16210	1685	42	-505	52
		1b	-16788	935	**42**	-526	29
		3	-23097	1635	76	-731	50
		4	-16161	910	50	-507	28
	90 deg	1a	-20260	**2672**	42	-627	**82**
		1b	-17050	1108	**42**	-534	34
		3	**-24180**	2182	**76**	**-764**	67
		4	-16367	1081	50	-514	33
	-45 deg	1a	-15568	1501	42	-485	46
		1b	-16755	902	**42**	-525	28
		3	-22957	1533	76	-727	47
		4	-16136	878	50	-507	27

Belasting uit mast

N	V	M
471	57	1361
471	57	1361
471	57	1361
471	57	1361
471	57	1361
471	57	1361
471	57	1361
471	57	1361
471	57	1361
471	57	1361
471	57	1361
471	57	1361
471	57	1361
471	57	1361
471	57	1361
471	57	1361

Totaal

regel		Loadcase	M_{langs}	M_{dwars}	N	V_{langs}	V_{dwars}	Totaal moment	M langs max	M dwars max	N max	V langs max	V dwars max	M tot max	N min
1 Perm load 1,2	0 deg	1a	15179	1976	513	491	76	15307,38	1						
2 Perm load 1,2	0 deg	1b	18042	2099	513	580	80	18163,36	2					x	
3 Perm load 1,2	0 deg	3	23986	2380	547	775	89	24103,99	3						
4 Perm load 1,2	0 deg	4	17439	2075	521	562	79	17562,33	4						
5									5						
6 Perm load 1,2	45 deg	1a	17572	3046	513	562	109	17833,65	6						
7 Perm load 1,2	45 deg	1b	18150	2296	513	583	86	18294,31	7					x	
8 Perm load 1,2	45 deg	3	24459	2996	547	789	108	24641,34	8						
9 Perm load 1,2	45 deg	4	17522	2271	521	565	85	17668,96	9						
10									10						
11 Perm load 1,2	90 deg	1a	21622	4034	513	684	139	21994,62	11	x		x			
12 Perm load 1,2	90 deg	1b	18412	2470	513	591	91	18576,59	12					x	
13 Perm load 1,2	90 deg	3	25542	3543	547	821	124	25786,18	13	x	x	x	x		
14 Perm load 1,2	90 deg	4 Construc	17729	2442	521	571	91	17896,03	14						
15									15						
16 Perm load 1,2	-45 deg	1a	16530	2863	513	543	103	16776,25	16						
17 Perm load 1,2	-45 deg	1b	17718	2264	513	582	85	17862,12	17					x	
18 Perm load 1,2	-45 deg	3	23919	2894	547	785	104	24093,61	18						
19 Perm load 1,2	-45 deg	4	17098	2239	521	564	84	17244,16	19						
			25542	4034	547	821	139	25786							
					513										

samenvatting

	Mast	Bijlage	Wind	Loadcase	M_{langs}	M_{dwars}	N	V_{langs}	V_{dwars}
7	W2E350	10-E2	Perm load 45 deg	1b	18150	2296	513	583	86
11	W2E350	10-E2	Perm load 90 deg	1a	21622	4034	513	684	139
12	W2E350	10-E2	Perm load 90 deg	1b	18412	2470	513	591	91
13	W2E350	10-E2	Perm load 90 deg	3	25542	3543	547	821	124
	W2E350	10-E2	#N/B #N/B	#N/B	#N/B	#N/B	#N/B	#N/B	#N/B
	W2E350	10-E2	#N/B #N/B	#N/B	#N/B	#N/B	#N/B	#N/B	#N/B

W2E350 TOWER (rev 6.0, date: 05-11-2012) Appendix: E2
Loadcase according to 50341-3-15

	Attachment point	BACK [N]	[N]	[N]	AHEAD [N]	[N]	[N]
1a	380C1F1 / 380C2F1	12421	5597	-127433	0	0	0
Wind, 10	380C1F2 / 380C2F2	12421	5594	-127433	0	0	0
Permanen	380C1F3 / 380C2F3	12421	5590	-127433	0	0	0
Wind angl	GW / opgw	1622	732	-16643	0	0	0
	Comp. gl	3365	1515	-34521	0	0	0
1b	380C1F1 / 380C2F1	12415	6739	-154196	0	0	0
Wind, -20	380C1F2 / 380C2F2	12415	6738	-154196	0	0	0
Permanen	380C1F3 / 380C2F3	12415	6738	-154196	0	0	0
Wind angl	GW / opgw	1621	865	-19778	0	0	0
	Comp. gl	3363	1768	-40455	0	0	0
3	380C1F1 / 380C2F1	19607	8467	-193497	0	0	0
Wind+ice,	380C1F2 / 380C2F2	19607	8465	-193497	0	0	0
Permanen	380C1F3 / 380C2F3	19607	8463	-193497	0	0	0
Wind angl	GW / opgw	5711	1988	-45404	0	0	0
	Comp. gl	11555	4009	-91636	0	0	0
4	380C1F1 / 380C2F1	14424	6419	-146877	0	0	0
Construct	380C1F2 / 380C2F2	14424	6419	-146877	0	0	0
Permanen	380C1F3 / 380C2F3	14424	6418	-146877	0	0	0
Wind angl	GW / opgw	2123	922	-21079	0	0	0
	Comp. gl	4367	1892	-43294	0	0	0
1a	380C1F1 / 380C2F1	12423	16100	-151591	0	0	0
Wind, 10	380C1F2 / 380C2F2	12423	15070	-147833	0	0	0
Permanen	380C1F3 / 380C2F3	12422	13746	-143273	0	0	0
Wind angl	GW / opgw	1623	2636	-22075	0	0	0
	Comp. gl	3365	4025	-39965	0	0	0
1b	380C1F1 / 380C2F1	12415	8675	-155290	0	0	0
Wind, -20	380C1F2 / 380C2F2	12415	8494	-155094	0	0	0
Permanen	380C1F3 / 380C2F3	12415	8259	-154868	0	0	0
Wind angl	GW / opgw	1621	1210	-20056	0	0	0
	Comp. gl	3363	2233	-40696	0	0	0
3	380C1F1 / 380C2F1	19607	13948	-198161	0	0	0
Wind+ice,	380C1F2 / 380C2F2	19607	13429	-197345	0	0	0
Permanen	380C1F3 / 380C2F3	19607	12759	-196397	0	0	0
Wind angl	GW / opgw	5711	3760	-46747	0	0	0
	Comp. gl	11555	6392	-92846	0	0	0
4	380C1F1 / 380C2F1	14424	8347	-147742	0	0	0
Construct	380C1F2 / 380C2F2	14424	8167	-147585	0	0	0
Permanen	380C1F3 / 380C2F3	14424	7934	-147405	0	0	0
Wind angl	GW / opgw	2123	1263	-21265	0	0	0
	Comp. gl	4367	2353	-43454	0	0	0
1a	380C1F1 / 380C2F1	12427	25791	-191857	0	0	0
Wind, 10	380C1F2 / 380C2F2	12426	23826	-183282	0	0	0
Permanen	380C1F3 / 380C2F3	12425	21284	-172391	0	0	0
Wind angl	GW / opgw	1623	4380	-29959	0	0	0
	Comp. gl	3366	6350	-49542	0	0	0
1b	380C1F1 / 380C2F1	12415	10376	-157943	0	0	0
Wind, -20	380C1F2 / 380C2F2	12415	10030	-157291	0	0	0
Permanen	380C1F3 / 380C2F3	12415	9584	-156533	0	0	0
Wind angl	GW / opgw	1621	1518	-20707	0	0	0
	Comp. gl	3363	2639	-41285	0	0	0
3	380C1F1 / 380C2F1	19609	18840	-208752	0	0	0
Wind+ice,	380C1F2 / 380C2F2	19608	17841	-206217	0	0	0
Permanen	380C1F3 / 380C2F3	19608	16556	-203213	0	0	0
Wind angl	GW / opgw	5712	5329	-49761	0	0	0
	Comp. gl	11556	8473	-95741	0	0	0
4	380C1F1 / 380C2F1	14425	10025	-149881	0	0	0
Construct	380C1F2 / 380C2F2	14425	9685	-149353	0	0	0
Permanen	380C1F3 / 380C2F3	14424	9245	-148740	0	0	0
Wind angl	GW / opgw	2123	1562	-21716	0	0	0
	Comp. gl	4367	2752	-43861	0	0	0
1a	380C1F1 / 380C2F1	12422	14297	-145130	0	0	0
Wind, 10	380C1F2 / 380C2F2	12422	13447	-142291	0	0	0
Permanen	380C1F3 / 380C2F3	12422	12353	-138883	0	0	0
Wind angl	GW / opgw	1622	2308	-20706	0	0	0
	Comp. gl	3365	3594	-38479	0	0	0
1b	380C1F1 / 380C2F1	12415	8357	-154958	0	0	0
Wind, -20	380C1F2 / 380C2F2	12415	8206	-154820	0	0	0
Permanen	380C1F3 / 380C2F3	12415	8010	-154661	0	0	0
Wind angl	GW / opgw	1621	1153	-19973	0	0	0
	Comp. gl	3363	2156	-40622	0	0	0
3	380C1F1 / 380C2F1	19607	13038	-196778	0	0	0
Wind+ice,	380C1F2 / 380C2F2	19607	12607	-196198	0	0	0
Permanen	380C1F3 / 380C2F3	19607	12050	-195526	0	0	0
Wind angl	GW / opgw	5711	3467	-46349	0	0	0
	Comp. gl	11555	6001	-92479	0	0	0
4	380C1F1 / 380C2F1	14424	8031	-147477	0	0	0
Construct	380C1F2 / 380C2F2	14424	7881	-147367	0	0	0
Permanen	380C1F3 / 380C2F3	14424	7686	-147241	0	0	0
Wind angl	GW / opgw	2123	1207	-21209	0	0	0
	Comp. gl	4367	2278	-43405	0	0	0

Totaal

	Vert [kN]	Dwars [kN]	Langs [kN]
1a	12,421	5,597	-127,433
Wind angle: 0 dgr	12,421	5,594	-127,433
	12,421	5,59	-127,433
	1,622	0,732	-16,643
	3,365	1,515	-34,521
1b	12,415	6,739	-154,196
Wind angle: 0 dgr	12,415	6,738	-154,196
	12,415	6,738	-154,196
	1,621	0,865	-19,778
	3,363	1,768	-40,455
3	19,607	8,467	-193,497
Wind angle: 0 dgr	19,607	8,465	-193,497
	19,607	8,463	-193,497
	5,711	1,988	-45,404
	11,555	4,009	-91,636
4	14,424	6,419	-146,877
Wind angle: 0 dgr	14,424	6,419	-146,877
	14,424	6,418	-146,877
	2,123	0,922	-21,079
	4,367	1,892	-43,294
1a	12,423	16,1	-151,591
Wind angle: 45 dgr	12,423	15,07	-147,833
	12,422	13,746	-143,273
	1,623	2,636	-22,075
	3,365	4,025	-39,965
1b	12,415	8,675	-155,29
Wind angle: 45 dgr	12,415	8,494	-155,094
	12,415	8,259	-154,868
	1,621	1,21	-20,056
	3,363	2,233	-40,696
3	19,607	13,948	-198,161
Wind angle: 45 dgr	19,607	13,429	-197,345
	19,607	12,759	-196,397
	5,711	3,76	-46,747
	11,555	6,392	-92,846
4	14,424	8,347	-147,742
Wind angle: 45 dgr	14,424	8,167	-147,585
	14,424	7,934	-147,405
	2,123	1,263	-21,265
	4,367	2,353	-43,454
1a	12,427	25,791	-191,857
Wind angle: 90 dgr	12,426	23,826	-183,282
	12,425	21,284	-172,391
	1,623	4,38	-29,959
	3,366	6,35	-49,542
1b	12,415	10,376	-157,943
Wind angle: 90 dgr	12,415	10,03	-157,291
	12,415	9,584	-156,533
	1,621	1,518	-20,707
	3,363	2,639	-41,285
3	19,609	18,84	-208,752
Wind angle: 90 dgr	19,608	17,841	-206,217
	19,608	16,556	-203,213
	5,712	5,329	-49,761
	11,556	8,473	-95,741
4	14,425	10,025	-149,881
Wind angle: 90 dgr	14,425	9,685	-149,353
	14,424	9,245	-148,74
	2,123	1,562	-21,716
	4,367	2,752	-43,861
1a	12,422	14,297	-145,13
Wind angle: -45 dgr	12,422	13,447	-142,291
	12,422	12,353	-138,883
	1,622	2,308	-20,706
	3,365	3,594	-38,479
1b	12,415	8,357	-154,958
Wind angle: -45 dgr	12,415	8,206	-154,82
	12,415	8,01	-154,661
	1,621	1,153	-19,973
	3,363	2,156	-40,622
3	19,607	13,038	-196,778
Wind angle: -45 dgr	19,607	12,607	-196,198
	19,607	12,05	-195,526
	5,711	3,467	-46,349
	11,555	6,001	-92,479
4	14,424	8,031	-147,477
Wind angle: -45 dgr	14,424	7,881	-147,367
	14,424	7,686	-147,241
	2,123	1,207	-21,209
	4,367	2,278	-43,405

Belastingen op mastvoet, per lijn

	M_{langs}	M_{dwars}	N	V_{langs}	V_{dwars}
1a	-5224,75	229,477	12,421	-127,433	5,597
Wind angle: 0 dgr	-4141,57	181,805	12,421	-127,433	5,594
	-3058,39	134,16	12,421	-127,433	5,59
	-823,629	37,45956	1,622	-16,643	0,732
	-569,597	32,02026	3,365	-34,521	1,515
1b	-6322,04	276,299	12,415	-154,196	6,739
Wind angle: 0 dgr	-5011,37	218,985	12,415	-154,196	6,738
	-3700,7	161,712	12,415	-154,196	6,738
	-978,774	44,0407	1,621	-19,778	0,865
	-667,508	36,19058	3,363	-40,455	1,768
3	-7933,38	347,147	19,607	-193,497	8,467
Wind angle: 0 dgr	-6288,65	275,1125	19,607	-193,497	8,465
	-4643,93	203,112	19,607	-193,497	8,463
	-2246,95	102,7282	5,711	-45,404	1,988
	-1511,99	90,26379	11,555	-91,636	4,009
4	-6021,96	263,179	14,424	-146,877	6,419
Wind angle: 0 dgr	-4773,5	208,6175	14,424	-146,877	6,419
	-3525,05	154,032	14,424	-146,877	6,418
	-1043,16	47,24354	2,123	-21,079	0,922
	-714,351	40,33193	4,367	-43,294	1,892
1a	-6215,23	660,1	12,423	-151,591	16,1
Wind angle: 45 dgr	-4804,57	489,775	12,423	-147,833	15,07
	-3438,55	329,904	12,422	-143,273	13,746
	-1092,45	131,6855	1,623	-22,075	2,636
	-659,423	73,43526	3,365	-39,965	4,025
1b	-6366,89	355,675	12,415	-155,29	8,675
Wind angle: 45 dgr	-5040,56	276,055	12,415	-155,094	8,494
	-3716,83	198,216	12,415	-154,868	8,259
	-992,531	61,11406	1,621	-20,056	1,21
	-671,484	43,86308	3,363	-40,696	2,233
3	-8124,6	571,868	19,607	-198,161	13,948
Wind angle: 45 dgr	-6413,71	436,4425	19,607	-197,345	13,429
	-4713,53	306,216	19,607	-196,397	12,759
	-2313,42	190,421	5,711	-46,747	3,76
	-1531,96	129,5833	11,555	-92,846	6,392
4	-6057,42	342,227	14,424	-147,742	8,347
Wind angle: 45 dgr	-4796,51	265,4275	14,424	-147,585	8,167
	-3537,72	190,416	14,424	-147,405	7,934
	-1052,36	64,11895	2,123	-21,265	1,263
	-716,991	47,93843	4,367	-43,454	2,353
1a	-7866,14	1057,431	12,427	-191,857	25,791
Wind angle: 90 dgr	-5956,67	774,345	12,426	-183,282	23,826
	-4137,38	510,816	12,425	-172,391	21,284
	-1482,61	217,9925	1,623	-29,959	4,38
	-817,443	111,7998	3,366	-49,542	6,35
1b	-6475,66	425,416	12,415	-157,943	10,376
Wind angle: 90 dgr	-5111,96	325,975	12,415	-157,291	10,03
	-3756,79	230,016	12,415	-156,533	9,584
	-1024,75	76,35637	1,621	-20,707	1,518
	-681,203	50,56208	3,363	-41,285	2,639
3	-8558,83	772,44	19,609	-208,752	18,84
Wind angle: 90 dgr	-6702,05	579,8325	19,608	-206,217	17,841
	-4877,11	397,344	19,608	-203,213	16,556
	-2462,57	268,0684	5,712	-49,761	5,329
	-1579,73	163,9219	11,556	-95,741	8,473
4	-6145,12	411,025	14,425	-149,881	10,025
Wind angle: 90 dgr	-4853,97	334,7625	14,425	-149,353	9,685
	-3569,76	221,88	14,424	-148,74	9,245
	-1074,68	78,91586	2,123	-21,716	1,562
	-723,707	54,52193	4,367	-43,861	2,752
1a	-5950,33	586,177	12,422	-145,13	14,297
Wind angle: -45 dgr	-4624,46	437,0275	12,422	-142,291	13,447
	-3333,19	296,472	12,422	-138,883	12,353
	-1024,7	115,4526	1,622	-20,706	2,308
	-634,904	66,32376	3,365	-38,479	3,594
1b	-6353,28	342,637	12,415	-154,958	8,357
Wind angle: -45 dgr	-5031,65	266,695	12,415	-154,82	8,206
	-3711,86	192,24	12,415	-154,661	8,01
	-988,424	58,29125	1,621	-19,973	1,153
	-670,263	42,59258	3,363	-40,622	2,156
3	-8067,9	534,558	19,607	-196,778	13,038
Wind angle: -45 dgr	-6376,44	409,7275	19,607	-196,198	12,607
	-4692,62	289,2	19,607	-195,526	12,05
	-2293,72	175,921	5,711	-46,349	3,467
	-1525,9	123,1318	11,555	-92,479	6,001
4	-6046,56	329,271	14,424	-147,477	8,031
Wind angle: -45 dgr	-4789,43	256,1325	14,424	-147,367	7,881
	-3533,78	184,464	14,424	-147,241	7,686
	-1049,59	61,34762	2,123	-21,209	1,207
	-716,183	46,70093	4,367	-43,405	2,278

Belasting op mastvoet, belastinggeval

	M_{langs}	M_{dwars}	N	V_{langs}	V_{dwars}
1a	-13817,9	614,9218	42,25	-433,463	19,028
Wind angle: 0 dgr					
1b	-16680,4	737,2273	42,229	-522,821	22,848
Wind angle: 0 dgr					
3	-22624,9	1018,364	76,087	-717,531	31,392
Wind angle: 0 dgr					
4	-16078	713,404	49,762	-505,004	22,07
Wind angle: 0 dgr					
1a	-16210,2	1684,9	42,256	-504,737	51,577
Wind angle: 45 dgr					
1b	-16788,3	934,9231	42,229	-526,004	28,871
Wind angle: 45 dgr					
3	-23097,2	1634,531	76,087	-731,496	50,288
Wind angle: 45 dgr					
4	-16161	910,1279	49,762	-507,451	28,064
Wind angle: 45 dgr					
1a	-20260,2	2672,384	42,267	-627,031	81,631
Wind angle: 90 dgr					
1b	-17050,4	1108,325	42,229	-533,759	34,147
Wind angle: 90 dgr					
3	-24180,3	2181,607	76,093	-763,684	67,039
Wind angle: 90 dgr					
4	-16367,2	1081,105	49,764	-513,551	33,269
Wind angle: 90 dgr					
1a	-15567,6	1501,453	42,253	-485,489	45,999
Wind angle: -45 dgr					
1b	-16755,5	902,4578	42,229	-525,034	27,882
Wind angle: -45 dgr					
3	-22956,6	1532,538	76,087	-727,33	47,163
Wind angle: -45 dgr					
4	-16135,5	877,916	49,762	-506,699	27,083
Wind angle: -45 dgr					

W4H400Z+ 14-Y

Hoogte mast	Ber & bijlage		58 m		
Hoogte onderste stroomdraad (F3)			32 m		
			Hoogte	Excentriciteit ophanging t.o.v. hart mast	
Bliksemdraad = GW / (H_{mast} -	0,57	m =	57,43 m	0,761	m
1e traverse - 380C1F1	F2 + 8,5	m =	49 m	0	m
1e traverse - 150C1F1			49	5,5	m
2e traverse - 380C1F2	F3 + 8,5	m =	40,5 m	0	m
2e traverse - 150C1F2	F3 +		40,5 m	5,5	m
3e traverse - 380C1F3			32 m	0	m
3e traverse - 150C1F3			32	5,5	m
Passieve lijn = Comp C	F3 - 7,5	m =	24,5 m	2,05	m

	Uit mast (excl belastingsfactoren) N [kN]	V [kN]	M [kNm]	Uit lijnen (incl belastingsfactoren) Nmin [kN]	Nmax [kN]	Vmax [kN]	Mlangs;max [kNm]	Mdwars;max [kNm]
Belasting Y	857	116	3147	106	276	1087	14471	43609
Belasting Y1				53	135	756	24201	19719
	857	116	3147	53	276,194	1086,678	24201,5	43608,73

Belastingen uit lijnen / Belasting uit mast

			Belastingen uit lijnen M_{langs}	M_{dwars}	N	V_{langs}	V_{dwars}	Belasting uit mast N	V	M
Perm load 1,2	0 deg	1a	0	23342	142	0	578	857	116	3147
		1b	0	24335	141	0	604	857	22	590
		3	0	37601	276	0	940	857	33	885
		4	0	24883	169	0	618	857	22	590
		6	0	23010	159	0	571			
	45 deg	1a	-11850	32056	142	-289	792	857	116	3147
		1b	-549	25299	141	-13	628	857	22	590
		3	-2190	40758	276	-52	1017	857	33	885
		4	-354	25761	169	-8	639	857	22	590
	90 deg	1a	0	39953	142	0	985	857	116	3147
		1b	0	26174	141	0	649	857	22	590
		3	0	43609	276	0	1087	857	33	885
		4	0	26570	169	0	659	857	22	590
	-45 deg	1a	11850	32056	142	289	792	857	116	3147
		1b	549	25299	141	13	628	857	22	590
		3	2190	40758	276	52	1017	857	33	885
		4	354	25761	169	8	639	857	22	590
	0 deg	1a	0	19276	106	0	477	643	116	3147
		1b	0	19730	106	0	490	643	22	590
		3	0	33940	241	0	849	643	33	885
		4	0	20690	133	0	514	643	22	590
		6	0	16532	106	0	410			
	45 deg	1a	-14471	29034	106	-354	717	643	116	3147
		1b	-919	20857	106	-22	517	643	22	590
		3	-2764	37348	241	-66	933	643	33	885
		4	-581	21668	133	-14	538	643	22	590
	90 deg	1a	0	38028	106	0	937	643	116	3147
		1b	0	21862	106	0	542	643	22	590
		3	0	40405	241	0	1007	643	33	885
		4	0	22555	133	0	560	643	22	590
	-45 deg	1a	**14471**	29034	106	**354**	717	643	116	3147
		1b	919	**20857**	**106**	22	**517**	643	22	590
		3	2764	**37348**	**241**	66	**933**	643	33	885
		4	**581**	21668	133	**14**	538	643	22	590

regel			Loadcase	Totaal M_{langs}	M_{dwars}	N	V_{langs}	V_{dwars}	Totaal moment					
1	Perm load 1,2	0 deg	1a	3147	23342	999	116	578	23553,02	1				
2	Perm load 1,2	0 deg	1b	590	24335	998	22	604	24342,19	2				
3	Perm load 1,2	0 deg	3	885	37601	1133	33	940	37611,91	3				
4	Perm load 1,2	0 deg	4	590	24883	1026	22	618	24890,38	4				
5	Perm load 1,2	0 deg	6							5				
6										6				
7	Perm load 1,2	45 deg	1a	14075	34281	999	371	874	37058,31	7				
8	Perm load 1,2	45 deg	1b	966	25716	998	28	643	25734,16	8				
9	Perm load 1,2	45 deg	3	2816	41384	1133	76	1040	41479,49	9				
10	Perm load 1,2	45 deg	4	771	26178	1026	24	655	26189,81	10				
11										11				
12	Perm load 1,2	90 deg	1a	0	43100	999	0	1101	43100,48	12				
13	Perm load 1,2	90 deg	1b	0	26764	998	0	671	26764,28	13				
14	Perm load 1,2	90 deg	3	0	44494	1133	0	1119	44493,83	14	x	x	x	x
15	Perm load 1,2	90 deg	4 Construc	0	27160	1026	0	681	27159,68	15				
16										16				
17	Perm load 1,2	-45 deg	1a	14075	34281	999	371	874	37058,31	17				
18	Perm load 1,2	-45 deg	1b	966	25716	998	28	643	25734,16	18				
19	Perm load 1,2	-45 deg	3	2816	41384	1133	76	1040	41479,49	19				
20	Perm load 1,2	-45 deg	4	771	26178	1026	24	655	26189,81	20				
21										21				
22	Perm load 0,9	0 deg	1a	3147	19276	749	116	477	19531,44	22				
23	Perm load 0,9	0 deg	1b	590	19730	749	22	490	19738,96	23				
24	Perm load 0,9	0 deg	3	885	33940	883	33	849	33951,33	24				
25	Perm load 0,9	0 deg	4	590	20690	776	22	514	20698,03	25				
26	Perm load 0,9	0 deg	6							26				
27										27				
28	Perm load 0,9	45 deg	1a	16697	31259	749	436	799	35438,81	28	x		x	
29	Perm load 0,9	45 deg	1b	1336	21274	749	37	533	21316,32	29				
30	Perm load 0,9	45 deg	3	3390	37974	883	89	956	38124,93	30				
31	Perm load 0,9	45 deg	4 Construc	998	22085	776	29	553	22107,61	31				
32										32				
33	Perm load 0,9	90 deg	1a	0	41175	749	0	1053	41174,81	33				
34	Perm load 0,9	90 deg	1b	0	22452	749	0	564	22451,94	34				
35	Perm load 0,9	90 deg	3	0	41290	884	0	1040	41289,97	35				
36	Perm load 0,9	90 deg	4	0	23145	776	0	581	23144,8	36				
37										37				
38	Perm load 0,9	-45 deg	1a	16697	31259	749	436	799	35438,81	38	x		x	
39	Perm load 0,9	-45 deg	1b	1336	21274	749	37	533	21316,32	39				
40	Perm load 0,9	-45 deg	3	3390	37974	883	89	956	38124,93	40				
41	Perm load 0,9	-45 deg	4	998	22085	776	29	553	22107,61	41				
			Max	16697	44494	1133	436	1119	44494					

samenvatting

	Mast	Bijlage		Wind	Loadcase	M_{langs}	M_{dwars}	N	V_{langs}	V_{dwars}
14	W4H400Z+	14-Y	Perm load	90 deg	3	0	44494	1133	0	1119
28	W4H400Z+	14-Y	Perm load	45 deg	1a	16697	31259	749	436	799

W4H400Z+5 TOWER (Rev.6.0 05-11-2(APPENDIX: Y

Loadcases for tower strength (ultimate limit state)

Loadcase according to

50341-3-15

	Attachment po	[N]	AHEAD [N]	[N]	[N]	BACK [N]	[N]	Totaal Vert [kN]	Dwars [kN]	Langs [kN]	Belastingen op mastvoet, per lijn M_{langs}	M_{dwars}	N	V_{langs}	V_{dwars}	Belasting op mastvoet, belastinggeval	M_{langs}	M_{dwars}	N	V_{langs}	V_{dwars}
1a	Comp. gl	4617	18864	37163	4617	18864	-37163	9,234	37,728	0	0	943,2657	9,234	0	37,728	1a	0	23341,83	141,524	0	578,258
Wind, 10 dg	GW / opgw	2226	9744	18536	2226	9744	-18536	4,452	19,488	0	0	1122,584	4,452	0	19,488	Wind angle: 0 dgr					
Permanent loads yg= 1.		17046	70229	137350	17046	70229	-137350	34,092	140,458	0	0	6882,442	34,092	0	140,458						
Wind angle:	380C1F2 / 3	17045	69520	136767	17045	69520	-136767	34,09	139,04	0	0	5631,12	34,09	0	139,04						
	380C1F3 / 3	17045	68668	136110	17045	68668	-136110	34,09	137,336	0	0	4394,752	34,09	0	137,336						
	150C1F1 / 1	4261	17557	34338	4261	17557	-34338	8,522	35,114	0	0	1767,457	8,522	0	35,114						
	150C1F2 / 1	4261	17380	34192	4261	17380	-34192	8,522	34,76	0	0	1454,651	8,522	0	34,76						
	150C1F3 / 1	4261	17167	34028	4261	17167	-34028	8,522	34,334	0	0	1145,559	8,522	0	34,334						
1b	Comp. gl	4615	19347	40832	4615	19347	-40832	9,23	38,694	0	0	966,9245	9,23	0	38,694	1b	0	24335,04	141,45	0	604,084
Wind, -20 d	GW / opgw	2225	9503	19908	2225	9503	-19908	4,45	19,006	0	0	1094,901	4,45	0	19,006	Wind angle: 0 dgr					
Permanent loads yg= 1.		17036	72945	153781	17036	72945	-153781	34,072	145,89	0	0	7148,61	34,072	0	145,89						
Wind angle:	380C1F2 / 3	17036	72858	153782	17036	72858	-153782	34,072	145,716	0	0	5901,498	34,072	0	145,716						
	380C1F3 / 3	17036	72751	153785	17036	72751	-153785	34,072	145,502	0	0	4656,064	34,072	0	145,502						
	150C1F1 / 1	4259	18236	38445	4259	18236	-38445	8,518	36,472	0	0	1833,977	8,518	0	36,472						
	150C1F2 / 1	4259	18214	38445	4259	18214	-38445	8,518	36,428	0	0	1522,183	8,518	0	36,428						
	150C1F3 / 1	4259	18188	38446	4259	18188	-38446	8,518	36,376	0	0	1210,881	8,518	0	36,376						
3	Comp. gl	18676	53224	110761	18676	53224	-110761	37,352	106,448	0	0	2684,548	37,352	0	106,448	3	0	37601,5	276,16	0	939,594
Wind+ice, -	GW / opgw	9244	26754	54947	9244	26754	-54947	18,488	53,508	0	0	3087,034	18,488	0	53,508	Wind angle: 0 dgr					
Permanent loads yg= 1.		29376	104230	216114	29376	104230	-216114	58,752	208,46	0	0	10214,54	58,752	0	208,46						
Wind angle:	380C1F2 / 3	29376	103971	216083	29376	103971	-216083	58,752	207,942	0	0	8421,651	58,752	0	207,942						
	380C1F3 / 3	29376	103654	216058	29376	103654	-216058	58,752	207,308	0	0	6633,856	58,752	0	207,308						
	150C1F1 / 1	7344	26057	54029	7344	26057	-54029	14,688	52,114	0	0	2634,37	14,688	0	52,114						
	150C1F2 / 1	7344	25993	54021	7344	25993	-54021	14,688	51,986	0	0	2186,217	14,688	0	51,986						
	150C1F3 / 1	7344	25914	54014	7344	25914	-54014	14,688	51,828	0	0	1739,28	14,688	0	51,828						
4	Comp. gl	6122	21974	46465	6122	21974	-46465	12,244	43,948	0	0	1101,826	12,244	0	43,948	4	0	24883,39	168,596	0	617,84
Constructio	GW opgw	2978	10779	22643	2978	10779	-22643	5,956	21,558	0	0	1242,608	5,956	0	21,558	Wind angle: 0 dgr					
Permanent loads yg= 1.		20053	73735	155473	20053	73735	-155473	40,106	147,47	0	0	7226,03	40,106	0	147,47						
Wind angle:	380C1F2 / 3	20053	73651	155481	20053	73651	-155481	40,106	147,302	0	0	5965,731	40,106	0	147,302						
	380C1F3 / 3	20053	73547	155493	20053	73547	-155493	40,106	147,094	0	0	4707,008	40,106	0	147,094						
	150C1F1 / 1	5013	18434	38868	5013	18434	-38868	10,026	36,868	0	0	1861,675	10,026	0	36,868						
	150C1F2 / 1	5013	18413	38870	5013	18413	-38870	10,026	36,826	0	0	1546,596	10,026	0	36,826						
	150C1F3 / 1	5013	18387	38873	5013	18387	-38873	10,026	36,774	0	0	1231,911	10,026	0	36,774						
6	Comp. gl	5195	18706	40116	5195	18706	-40116	10,39	37,412	0	0	937,8935	10,39	0	37,412	6	0	23009,92	159,226	0	570,848
Permanent,	GW / opgw	2505	9033	19371	2505	9033	-19371	5,01	18,066	0	0	1041,343	5,01	0	18,066	0					
Permanent loads yg= 1.		19177	68716	147362	19177	68716	-147362	38,354	137,432	0	0	6734,168	38,354	0	137,432						
	380C1F2 / 3	19177	68716	147362	19177	68716	-147362	38,354	137,432	0	0	5565,996	38,354	0	137,432						
	380C1F3 / 3	19177	68716	147362	19177	68716	-147362	38,354	137,432	0	0	4397,824	38,354	0	137,432						
	150C1F1 / 1	4794	17179	36841	4794	17179	-36841	9,588	34,358	0	0	1736,276	9,588	0	34,358						
	150C1F2 / 1	4794	17179	36841	4794	17179	-36841	9,588	34,358	0	0	1444,233	9,588	0	34,358						
	150C1F3 / 1	4794	17179	36841	4794	17179	-36841	9,588	34,358	0	0	1152,19	9,588	0	34,358						
1a	Comp. gl	4617	18081	36619	4620	33409	-55362	9,237	51,49	-18,743	-459,204	1280,441	9,237	-18,743	51,49	1a	-11849,8	32056,09	141,568	-288,882	791,523
Wind, 10 dg	GW / opgw	2226	9074	17914	2228	21142	-33659	4,454	30,216	-15,745	-904,235	1738,694	4,454	-15,745	30,216	Wind angle: 45 dgr					
Permanent loads yg= 1.		17045	66993	134985	17057	129043	-211148	34,102	196,036	-76,163	-3731,99	9605,764	34,102	-76,163	196,036						
Wind angle:	380C1F2 / 3	17045	66603	134762	17056	123174	-203211	34,101	189,777	-68,449	-2772,18	7685,969	34,101	-68,449	189,777						
	380C1F3 / 3	17045	66131	134516	17054	115909	-193419	34,099	182,04	-58,903	-1884,9	5825,28	34,099	-58,903	182,04						
	150C1F1 / 1	4261	16748	33746	4264	32261	-52787	8,525	49,009	-19,041	-933,009	2448,329	8,525	-19,041	49,009						
	150C1F2 / 1	4261	16651	33691	4264	30794	-50803	8,525	47,445	-17,112	-693,036	1968,41	8,525	-17,112	47,445						
	150C1F3 / 1	4261	16533	33629	4264	28977	-48355	8,525	45,51	-14,726	-471,232	1503,208	8,525	-14,726	45,51						
1b	Comp. gl	4615	19245	40840	4615	20946	-41664	9,23	40,191	-0,824	-20,188	1003,601	9,23	-0,824	40,191	1b	-548,645	25298,79	141,451	-13,103	627,602
Wind, -20 d	GW / opgw	2225	9424	19902	2225	10847	-20929	4,45	20,271	-1,027	-58,9806	1167,55	4,45	-1,027	20,271	Wind angle: 45 dgr					
Permanent loads yg= 1.		17036	72530	153806	17037	79525	-157441	34,073	152,055	-3,635	-178,115	7450,695	34,073	-3,635	152,055						
Wind angle:	380C1F2 / 3	17036	72476	153813	17036	78813	-156840	34,072	151,289	-3,027	-122,594	6127,205	34,072	-3,027	151,289						
	380C1F3 / 3	17036	72410	153824	17036	77958	-156163	34,072	150,368	-2,339	-74,848	4811,776	34,072	-2,339	150,368						
	150C1F1 / 1	4259	18133	38451	4259	19881	-39360	8,518	38,014	-0,909	-44,541	1909,535	8,518	-0,909	38,014						
	150C1F2 / 1	4259	18119	38453	4259	19703	-39210	8,518	37,822	-0,757	-30,6585	1578,64	8,518	-0,757	37,822						
	150C1F3 / 1	4259	18103	38456	4259	19489	-39041	8,518	37,592	-0,585	-18,72	1249,793	8,518	-0,585	37,592						
3	Comp. gl	18676	52715	110835	18679	60793	-113667	37,355	113,508	-2,832	-69,384	2857,524	37,355	-2,832	113,508	3	-2189,86	40757,96	276,181	-52,469	1016,845
Wind+ice, -	GW / opgw	9244	26368	54956	9247	32885	-58520	18,491	59,253	-3,564	-204,681	3416,971	18,491	-3,564	59,253	Wind angle: 45 dgr					
Permanent loads yg= 1.		29376	103008	216050	29381	124621	-230625	58,757	227,629	-14,575	-714,175	11153,82	58,757	-14,575	227,629						
Wind angle:	380C1F2 / 3	29376	102851	216057	29380	122400	-228455	58,756	225,251	-12,398	-502,119	9122,666	58,756	-12,398	225,251						
	380C1F3 / 3	29376	102659	216072	29379	119728	-225957	58,755	222,387	-9,885	-316,32	7116,384	58,755	-9,885	222,387						
	150C1F1 / 1	7344	25752	54012	7345	31155	-57656	14,689	56,907	-3,644	-178,556	2869,233	14,689	-3,644	56,907						
	150C1F2 / 1	7344	25713	54014	7345	30600	-57114	14,689	56,313	-3,1	-125,55	2361,466	14,689	-3,1	56,313						
	150C1F3 / 1	7344	25665	54018	7345	29932	-56489	14,689	55,597	-2,471	-79,072	1859,894	14,689	-2,471	55,597						
4	Comp. gl	6122	21877	46484	6122	23381	-46885	12,244	45,258	-0,401	-9,8245	1133,921	12,244	-0,401	45,258	4	-353,737	25761,22	168,596	-8,395	639,283
Constructio	GW opgw	2978	10706	22649	2978	11922	-23233	5,956	22,628	-0,584	-33,5391	1304,059	5,956	-0,584	22,628	Wind angle: 45 dgr					
Permanent loads yg= 1.		20053	73334	155528	20053	79779	-157978	40,106	153,113	-2,45	-120,05	7502,537	40,106	-2,45	153,113						
Wind angle:	380C1F2 / 3	20053	73281	155539	20053	79139	-157533	40,106	152,42	-1,994	-80,757	6173,01	40,106	-1,994	152,42						
	380C1F3 / 3	20053	73217	155553	20053	78368	-157037	40,106	151,585	-1,484	-47,488	4850,72	40,106	-1,484	151,585						
	150C1F1 / 1	5013	18333	38882	5013	19945	-39495	10,026	38,278	-0,613	-30,037	1930,765	10,026	-0,613	38,278						
	150C1F2 / 1	5013	18320	38885	5013	19785	-39383	10,026	38,105	-0,498	-20,169	1598,396	10,026	-0,498	38,105						
	150C1F3 / 1	5013	18304	38888	5013	19592	-39259	10,026	37,896	-0,371	-11,872	1267,815	10,026	-0,371	37,896						
1a	Comp. gl	4620	31951	53373	4620	31951	-53373	9,24	63,902	0	0	1584,541	9,24	0	63,902	1a	0	39953,48	141,606	0	984,566
Wind, 10 dg	GW / opgw	2228	20081	32201	2228	20081	-32201	4,456	40,162	0	0	2309,895	4,456	0	40,162	Wind angle: 90 dgr					
Permanent loads yg= 1.		17056	123258	203324	17056	123258	-203324	34,112	246,516	0	0	12079,28	34,112	0	246,516						
Wind angle:	380C1F2 / 3	17055	117826	195998	17055	117826	-195998	34,11	235,652	0	0	9543,906	34,11	0	235,652						
	380C1F3 / 3	17053	111117	186995	17053	111117	-186995	34,106	222,234	0	0	7111,488	34,106	0	222,234						
	150C1F1 / 1	4264	30815	50831	4264	30815	-50831	8,528	61,63	0	0	3066,774	8,528	0	61,63						
	150C1F2 / 1	4264	29456	48999	4264	29456	-48999	8,528	58,912	0	0	2432,84	8,528	0	58,912						
	150C1F3 / 1	4263	27779	46749	4263	27779	-46749	8,526	55,558	0	0	1824,749	8,526	0	55,558						
1b	Comp. gl	4615	20776	41527	4615	20776	-41527	9,23	41,552	0	0	1036,946	9,23	0	41,552	1b	0	26174,22	141,45	0	648,984
Wind, -20 d	GW / opgw	2225	10700	20777	2225	10700	-20777	4,45	21,4	0	0	1232,388	4,45	0	21,4	Wind angle: 90 dgr					
Permanent loads yg= 1.		17036	78823	156849	17036	78823	-156849	34,072	157,646	0	0	7724,654	34,072	0	157,646						
Wind angle:	380C1F2 / 3	17036	78180	156335	17036	78180	-156335	34,072	156,36	0	0	6332,58	34,072	0	156,36						
	380C1F3 / 3	17036	77410	155757	17036	77410	-155757	34,072	154,82	0	0	4954,24	34,072	0	154,82						
	150C1F1 / 1	4259	19706	39212	4259	19706	-39212	8,518	39,412	0	0	1978,037	8,518	0	39,412						
	150C1F2 / 1	4259	19545	39084	4259	19545	-39084	8,518	39,09	0	0	1629,994	8,518	0	39,09						
	150C1F3 / 1	4259	19352	38939	4259	19352	-38939	8,518	38,704	0	0	1285,377	8,518	0	38,704						
3	Comp. gl	18678	60012	113159	18678	60012	-113159	37,356	120,024	0	0	3017,168	37,356	0	120,024	3	0	43608,73	276,194	0	1086,678
Wind+ice, -	GW / opgw	9246	32242	57978	9246	32242	-57978	18,492	64,484	0	0	3717,389	18,492	0	64,484	Wind angle: 90 dgr					
Permanent loads yg= 1.		29380	122431	228485	29380	122431	-228485	58,76	244,862	0	0	11998,24	58,76	0	244,862						
Wind angle:	380C1F2 / 3	29379	120425	226595	29379	120425	-226595	58,758	240,85	0	0	9754,425	58,758	0	240,85						
	380C1F3 / 3	29379	118012	224428	29379	118012	-224428	58,758	236,024	0	0	7552,768	58,758	0	236,024						
	150C1F1 / 1	7345	30608	57121	7345	30608	-57121	14,69	61,216	0	0	3080,379	14,69	0	61,216						
	150C1F2 / 1	7345	30106	56649	7345	30106	-56649	14,69	60,212	0	0	2519,381	14,69	0	60,212						
	150C1F3 / 1	7345	29503	56107	7345	29503	-56107	14,69	59,006	0	0	1968,987	14,69	0	59,006						
4	Comp. gl	6122	23237	46803	6122	23237	-46803	12,244	46,474	0	0	1163,713	12,244	0	46,474	4	0	26569,62	168,596	0	659,048
Constructio	GW opgw	2978	11801	23136	2978	11801	-23136	5,956	23,602	0	0	1359,995	5,956	0	23,602	Wind angle: 90 dgr					
Permanent loads yg= 1.		20053	79148	157539	20053	79148	-157539	40,106	158,296	0	0	7756,504	40,106	0	158,296						
Wind angle:	380C1F2 / 3	20053	78569	157162	20053	78569	-157162	40,106	157,138	0	0	6364,089	40,106	0	157,138						
	380C1F3 / 3	20053	77872	156743	20053	77872	-156743	40,106	155,744	0	0	4983,808	40,106	0	155,744						
	150C1F1 / 1	5013	19787	39385	5013	19787	-39385	10,026	39,574	0	0	1994,269	10,026	0	39,574						

	150C1F2 /	15013	19642	39291	5013	19642	-39291	10,026	39,284	0	0	1646,145	10,026	0	39,284						
	150C1F3 /	15013	19468	39186	5013	19468	-39186	10,026	38,936	0	0	1301,095	10,026	0	38,936						
1a	Comp. gl	4620	33409	55362	4617	18081	-36619	9,237	51,49	18,743	459,2035	1280,441	9,237	18,743	51,49	1a	11849,78	32056,09	141,568	288,882	791,523
Wind, 10 dg	GW / opgw	2228	21142	33659	2226	9074	-17914	4,454	30,216	15,745	904,2354	1738,694	4,454	15,745	30,216	Wind angle: -45 dgr					
Permanent loads yg= 1.:		17057	129043	211148	17045	66993	-134985	34,102	196,036	76,163	3731,987	9605,764	34,102	76,163	196,036						
Wind angle:	380C1F2 / 3	17056	123174	203211	17045	66603	-134762	34,101	189,777	68,449	2772,185	7685,969	34,101	68,449	189,777						
	380C1F3 / 3	17054	115909	193419	17045	66131	-134516	34,099	182,04	58,903	1884,896	5825,28	34,099	58,903	182,04						
	150C1F1 /	14264	32261	52787	4261	16748	-33746	8,525	49,009	19,041	933,009	2448,329	8,525	19,041	49,009						
	150C1F2 /	14264	30794	50803	4261	16651	-33691	8,525	47,445	17,112	693,036	1968,41	8,525	17,112	47,445						
	150C1F3 /	14264	28977	48355	4261	16533	-33629	8,525	45,51	14,726	471,232	1503,208	8,525	14,726	45,51						
1b	Comp. gl	4615	20946	41664	4615	19245	-40840	9,23	40,191	0,824	20,188	1003,601	9,23	0,824	40,191	1b	548,6446	25298,79	141,451	13,103	627,602
Wind, -20 d	GW / opgw	2225	10847	20929	2225	9424	-19902	4,45	20,271	1,027	58,98061	1167,55	4,45	1,027	20,271	Wind angle: -45 dgr					
Permanent loads yg= 1.:		17037	79525	157441	17036	72530	-153806	34,073	152,055	3,635	178,115	7450,695	34,073	3,635	152,055						
Wind angle:	380C1F2 / 3	17036	78813	156840	17036	72476	-153813	34,072	151,289	3,027	122,5935	6127,205	34,072	3,027	151,289						
	380C1F3 / 3	17036	77958	156163	17036	72410	-153824	34,072	150,368	2,339	74,848	4811,776	34,072	2,339	150,368						
	150C1F1 /	14259	19881	39360	4259	18133	-38451	8,518	38,014	0,909	44,541	1909,535	8,518	0,909	38,014						
	150C1F2 /	14259	19703	39210	4259	18119	-38453	8,518	37,822	0,757	30,6585	1578,64	8,518	0,757	37,822						
	150C1F3 /	14259	19489	39041	4259	18103	-38456	8,518	37,592	0,585	18,72	1249,793	8,518	0,585	37,592						
3	Comp. gl	18679	60793	113667	18676	52715	-110835	37,355	113,508	2,832	69,384	2857,524	37,355	2,832	113,508	3	2189,857	40757,96	276,181	52,469	1016,845
Wind+ice, -	GW / opgw	9247	32885	58520	9244	26368	-54956	18,491	59,253	3,564	204,6805	3416,971	18,491	3,564	59,253	Wind angle: -45 dgr					
Permanent loads yg= 1.:		29381	124621	230625	29376	103008	-216050	58,757	227,629	14,575	714,175	11153,82	58,757	14,575	227,629						
Wind angle:	380C1F2 / 3	29380	122400	228455	29376	102851	-216057	58,756	225,251	12,398	502,119	9122,666	58,756	12,398	225,251						
	380C1F3 / 3	29379	119728	225957	29376	102659	-216072	58,755	222,387	9,885	316,32	7116,384	58,755	9,885	222,387						
	150C1F1 /	17345	31155	57656	7344	25752	-54012	14,689	56,907	3,644	178,556	2869,233	14,689	3,644	56,907						
	150C1F2 /	17345	30600	57114	7344	25713	-54014	14,689	56,313	3,1	125,55	2361,466	14,689	3,1	56,313						
	150C1F3 /	17345	29932	56489	7344	25665	-54018	14,689	55,597	2,471	79,072	1859,894	14,689	2,471	55,597						
4	Comp. gl	6122	23381	46885	6122	21877	-46484	12,244	45,258	0,401	9,8245	1133,921	12,244	0,401	45,258	4	353,7366	25761,22	168,596	8,395	639,283
Constructio	GW opgw	2978	11922	23233	2978	10706	-22649	5,956	22,628	0,584	33,53912	1304,059	5,956	0,584	22,628	Wind angle: -45 dgr					
Permanent loads yg= 1.:		20053	79779	157978	20053	73334	-155528	40,106	153,113	2,45	120,05	7502,537	40,106	2,45	153,113						
Wind angle:	380C1F2 / 3	20053	79139	157533	20053	73281	-155539	40,106	152,42	1,994	80,757	6173,01	40,106	1,994	152,42						
	380C1F3 / 3	20053	78368	157037	20053	73217	-155553	40,106	151,585	1,484	47,488	4850,72	40,106	1,484	151,585						
	150C1F1 /	15013	19945	39495	5013	18333	-38882	10,026	38,278	0,613	30,037	1930,765	10,026	0,613	38,278						
	150C1F2 /	15013	19785	39383	5013	18320	-38885	10,026	38,105	0,498	20,169	1598,396	10,026	0,498	38,105						
	150C1F3 /	15013	19592	39259	5013	18304	-38888	10,026	37,896	0,371	11,872	1267,815	10,026	0,371	37,896						
1a	Comp. gl	3462	15495	29938	3462	15495	-29938	6,924	30,99	0	0	773,4492	6,924	0	30,99	1a	0	19276,25	106,122	0	477,332
Wind, 10 dg	GW / opgw	1669	8229	15287	1669	8229	-15287	3,338	16,458	0	0	947,7232	3,338	0	16,458	Wind angle: 0 dgr					
Permanent loads yg= 0.!		12782	58216	111589	12782	58216	-111589	25,564	116,432	0	0	5705,168	25,564	0	116,432						
Wind angle:	380C1F2 / 3	12782	57373	110722	12782	57373	-110722	25,564	114,746	0	0	4647,213	25,564	0	114,746						
	380C1F3 / 3	12781	56365	109729	12781	56365	-109729	25,562	112,73	0	0	3607,36	25,562	0	112,73						
	150C1F1 /	13195	14554	27897	3195	14554	-27897	6,39	29,108	0	0	1461,437	6,39	0	29,108						
	150C1F2 /	13195	14343	27680	3195	14343	-27680	6,39	28,686	0	0	1196,928	6,39	0	28,686						
	150C1F3 /	13195	14091	27432	3195	14091	-27432	6,39	28,182	0	0	936,969	6,39	0	28,182						
1b	Comp. gl	3461	15550	32688	3461	15550	-32688	6,922	31,1	0	0	776,1401	6,922	0	31,1	1b	0	19730,14	106,06	0	489,924
Wind, -20 d	GW / opgw	1668	7657	15948	1668	7657	-15948	3,336	15,314	0	0	882,0217	3,336	0	15,314	Wind angle: 0 dgr					
Permanent loads yg= 0.!		12774	59236	124383	12774	59236	-124383	25,548	118,472	0	0	5805,128	25,548	0	118,472						
Wind angle:	380C1F2 / 3	12774	59142	124368	12774	59142	-124368	25,548	118,284	0	0	4790,502	25,548	0	118,284						
	380C1F3 / 3	12774	59026	124354	12774	59026	-124354	25,548	118,052	0	0	3777,664	25,548	0	118,052						
	150C1F1 /	13193	14809	31096	3193	14809	-31096	6,386	29,618	0	0	1486,405	6,386	0	29,618						
	150C1F2 /	13193	14785	31092	3193	14785	-31092	6,386	29,57	0	0	1232,708	6,386	0	29,57						
	150C1F3 /	13193	14757	31089	3193	14757	-31089	6,386	29,514	0	0	979,571	6,386	0	29,514						
3	Comp. gl	17518	50875	105724	17518	50875	-105724	35,036	101,75	0	0	2564,699	35,036	0	101,75	3	0	33939,79	240,722	0	849,264
Wind+ice, -	GW / opgw	8685	25623	52521	8685	25623	-52521	17,37	51,246	0	0	2956,276	17,37	0	51,246	Wind angle: 0 dgr					
Permanent loads yg= 0.!		25109	93127	192307	25109	93127	-192307	50,218	186,254	0	0	9126,446	50,218	0	186,254						
Wind angle:	380C1F2 / 3	25109	92856	192248	25109	92856	-192248	50,218	185,712	0	0	7521,336	50,218	0	185,712						
	380C1F3 / 3	25109	92524	192190	25109	92524	-192190	50,218	185,048	0	0	5921,536	50,218	0	185,048						
	150C1F1 /	16277	23282	48077	6277	23282	-48077	12,554	46,564	0	0	2350,683	12,554	0	46,564						
	150C1F2 /	16277	23214	48062	6277	23214	-48062	12,554	46,428	0	0	1949,381	12,554	0	46,428						
	150C1F3 /	16277	23131	48048	6277	23131	-48048	12,554	46,262	0	0	1549,431	12,554	0	46,262						
4	Comp. gl	4966	18625	39284	4966	18625	-39284	9,932	37,25	0	0	932,9856	9,932	0	37,25	4	0	20689,62	133,184	0	514,002
Constructio	GW opgw	2421	9157	19166	2421	9157	-19166	4,842	18,314	0	0	1055,458	4,842	0	18,314	Wind angle: 0 dgr					
Permanent loads yg= 0.!		15788	61220	128636	15788	61220	-128636	31,576	122,44	0	0	5999,56	31,576	0	122,44						
Wind angle:	380C1F2 / 3	15788	61132	128635	15788	61132	-128635	31,576	122,264	0	0	4951,692	31,576	0	122,264						
	380C1F3 / 3	15788	61023	128636	15788	61023	-128636	31,576	122,046	0	0	3905,472	31,576	0	122,046						
	150C1F1 /	13947	15305	32159	3947	15305	-32159	7,894	30,61	0	0	1543,307	7,894	0	30,61						
	150C1F2 /	13947	15283	32159	3947	15283	-32159	7,894	30,566	0	0	1281,34	7,894	0	30,566						
	150C1F3 /	13947	15256	32159	3947	15256	-32159	7,894	30,512	0	0	1019,801	7,894	0	30,512						
6	Comp. gl	3462	13367	28666	3462	13367	-28666	6,924	26,734	0	0	669,1772	6,924	0	26,734	6	0	16532,18	106,118	0	410,362
Permanent,	GW / opgw	1669	6441	13813	1669	6441	-13813	3,338	12,882	0	0	742,3535	3,338	0	12,882	0					
Permanent loads yg= 1.:		12781	49433	106010	12781	49433	-106010	25,562	98,866	0	0	4844,434	25,562	0	98,866						
	380C1F2 / 3	12781	49433	106010	12781	49433	-106010	25,562	98,866	0	0	4004,073	25,562	0	98,866						
	380C1F3 / 3	12781	49433	106010	12781	49433	-106010	25,562	98,866	0	0	3163,712	25,562	0	98,866						
	150C1F1 /	13195	12358	26502	3195	12358	-26502	6,39	24,716	0	0	1246,229	6,39	0	24,716						
	150C1F2 /	13195	12358	26502	3195	12358	-26502	6,39	24,716	0	0	1036,143	6,39	0	24,716						
	150C1F3 /	13195	12358	26502	3195	12358	-26502	6,39	24,716	0	0	826,057	6,39	0	24,716						
1a	Comp. gl	3462	14575	29100	3465	31889	-52105	6,927	46,464	-23,005	-563,623	1152,568	6,927	-23,005	46,464	1a	-14471,4	29033,81	106,159	-353,832	716,536
Wind, 10 dg	GW / opgw	1669	7433	14394	1671	20653	-32612	3,34	28,086	-18,218	-1046,26	1615,521	3,34	-18,218	28,086	Wind angle: 45 dgr					
Permanent loads yg= 0.!		12781	54398	107977	12791	124045	-200436	25,572	178,443	-92,459	-4530,49	8743,707	25,572	-92,459	178,443						
Wind angle:	380C1F2 / 3	12781	53943	107616	12791	117800	-191692	25,572	171,743	-84,076	-3405,08	6955,592	25,572	-84,076	171,743						
	380C1F3 / 3	12781	53398	107211	12789	110005	-180763	25,57	163,403	-73,552	-2353,66	5228,896	25,57	-73,552	163,403						
	150C1F1 /	13195	13600	26994	3198	31011	-50109	6,393	44,611	-23,115	-1132,64	2221,101	6,393	-23,115	44,611						
	150C1F2 /	13195	13486	26904	3198	29450	-47923	6,393	42,936	-21,019	-851,27	1774,07	6,393	-21,019	42,936						
	150C1F3 /	13195	13349	26803	3197	27501	-45191	6,392	40,85	-18,388	-588,416	1342,356	6,392	-18,388	40,85						
1b	Comp. gl	3461	15441	32682	3461	17403	-34068	6,922	32,844	-1,386	-33,957	818,8681	6,922	-1,386	32,844	1b	-918,672	20857,18	106,066	-22,062	517,396
Wind, -20 d	GW / opgw	1668	7571	15926	1669	9248	-17501	3,337	16,819	-1,575	-90,4523	968,4546	3,337	-1,575	16,819	Wind angle: 45 dgr					
Permanent loads yg= 0.!		12774	58791	124344	12775	66909	-130388	25,549	125,7	-6,044	-296,156	6159,3	25,549	-6,044	125,7						
Wind angle:	380C1F2 / 3	12774	58735	124345	12775	66054	-129483	25,549	124,789	-5,138	-208,089	5053,955	25,549	-5,138	124,789						
	380C1F3 / 3	12774	58665	124348	12774	65032	-128446	25,548	123,697	-4,098	-131,136	3958,304	25,548	-4,098	123,697						
	150C1F1 /	13193	14698	31086	3194	16727	-32597	6,387	31,425	-1,511	-74,039	1574,954	6,387	-1,511	31,425						
	150C1F2 /	13193	14684	31086	3194	16514	-32371	6,387	31,198	-1,285	-52,0425	1298,648	6,387	-1,285	31,198						
	150C1F3 /	13193	14666	31087	3194	16258	-32112	6,387	30,924	-1,025	-32,8	1024,697	6,387	-1,025	30,924						
3	Comp. gl	17518	50360	105786	17520	58644	-109062	35,038	109,004	-3,276	-80,262	2742,426	35,038	-3,276	109,004	3	-2764,03	37348,07	240,741	-66,398	932,625
Wind+ice, -	GW / opgw	8685	25231	52518	8688	31935	-56483	17,373	57,166	-3,965	-227,71	3296,264	17,373	-3,965	57,166	Wind angle: 45 dgr					
Permanent loads yg= 0.!		25109	91851	192124	25113	115309	-210660	50,222	207,16	-18,536	-908,264	10150,84	50,222	-18,536	207,16						
Wind angle:	380C1F2 / 3	25109	91689	192120	25113	112877	-208039	50,222	204,566	-15,919	-644,72	8284,923	50,222	-15,919	204,566						
	380C1F3 / 3	25109	91490	192121	25112	109949	-204991	50,221	201,439	-12,87	-411,84	6446,048	50,221	-12,87	201,439						
	150C1F1 /	16277	22963	48031	6278	28827	-52665	12,555	51,79	-4,634	-227,066	2606,763	12,555	-4,634	51,79						
	150C1F2 /	16277	22922	48030	6278	28219	-52010	12,555	51,141	-3,98	-161,19	2140,263	12,555	-3,98	51,141						
	150C1F3 /	16277	22872	48030	6278	27487	-51248	12,555	50,359	-3,218	-102,976	1680,541	12,555	-3,218	50,359						
4	Comp. gl	4966	18525	39296	4966	20153	-39964	9,932	38,678	-0,668	-16,366	967,9716	9,932	-0,668	38,678	4	-580,622	21667,84	133,185	-13,881	537,872
Constructio	GW opgw	2421	9081	19165	2421	10421	-20014	4,842	19,502	-0,849	-48,7581	1123,685	4,842	-0,849	19,502	Wind angle: 45 dgr					
Permanent loads yg= 0.!		15788	60801	128652	15789	67957	-132629	31,577	128,758	-3,977	-194,873	6309,142	31,577	-3,977	128,758						
Wind angle:	380C1F2 / 3	15788	60747	128658	15788	67224	-131985	31,576	127,971	-3,327	-134,744	5182,826	31,576	-3,327	127,971						
	380C1F3 / 3	15788	60680	128668	15788	66345	-131256	31,576	127,025	-2,588	-82,816	4064,8	31,576	-2,588	127,025						
	150C1F1 /	13947	15200	32163	3947	16989	-33157	7,894	32,189	-0,994	-48,706	1620,678	7,894	-0,994	32,189						
	150C1F2 /	13947	15187	32165	3947	16806	-32996	7,894	31,993	-0,831	-33,6555	1339,134	7,894	-0,831	31,993						
	150C1F3 /	13947	15170	32167	3947	16586	-32814	7,894	31,756	-0,647	-20,704	1059,609	7,894	-0,647	31,756						
1a	Comp. gl	3464	30325	49888	3464	30325	-49888	6,928	60,65	0	0	1500,127	6,928	0	60,65	1a	0	38027,81	106,194	0	936,694
Wind, 10 dg	GW / opgw	1671	19552	31066	1671	19552	-31066	3,342	39,104	0	0	2248,286	3,342	0	39,104	Wind angle: 90 dgr					
Permanent loads yg= 0.!		12791	117890	191818	12791	117890	-191818	25,582	235,78	0	0	11553,22	25,582	0	235,78						
Wind angle:	380C1F2 / 3	12790	112069	183658	12790	112069	-183658	25,58	224,138	0	0	9077,589	25,58	0	224,138						
	380C1F3 / 3	12789	104817	173489	12789	104817	-173489	25,578	209,634	0	0	6708,288	25,578	0	209,634						
	150C1F1 /	13198	29473	47954	3198	29473	-47954	6,396	58,946	0	0	2923,532	6,396	0	58,946						
	150C1F2 /	13197	28017	45914	3197	28017	-45914	6,394	56,034	0	0	2304,544	6,394	0	56,034						
	150C1F3 /	13197	26204	43372	3197	26204	-43372	6,394	52,408	0	0	1712,223	6,394	0	52,408						
1b	Comp. gl	3461	17200	33860	3461	17200	-33860	6,922	34,4	0	0	856,9901	6,922	0	34,4	1b	0	21861,88	106,07	0	541,904
Wind, -20 d	GW / opgw	1669	9072	17285	1669	9072	-17285	3,338	18,144	0	0	1044,55	3,338	0	18,144	Wind angle: 90 dgr					
Permanent loads yg= 0.!		12775	66066	129496	12775	66066	-129496	25,55	132,132	0	0	6474,468	25,55	0	132,132						
Wind angle:	380C1F2 / 3	12774	65298	128711	12774	65298	-128711	25,548	130,596	0	0	5289,138	25,548	0	130,596						
	380C1F3 / 3	12774	64379	127815	12774	64379	-127815	25,548	128,758	0	0	4120,256	25,548	0	128,758						
	150C1F1 /	13194	16517	32374	3194	16517	-32374	6,388	33,034	0	0	1653,8	6,388	0	33,034						
	150C1F2 /	13194	16325	32178	3194	16325	-32178	6,388	32,65	0	0	1357,459	6,388	0	32,65						
	150C1F3 /	13194	16095	31954	3194	16095	-31954	6,388	32,19	0	0	1065,214	6,388	0	32,19						
3	Comp. gl	17520	57838	108499	17520	57838	-108499	35,04	115,676	0	0	2905,894	35,04	0	115,676	3	0	40404,88	240,758	0	1007,45
Wind+ice, -	GW / opgw	8688	31271	55896	8688	31271	-55896	17,376	62,542	0	0	3605,01	17,376	0	62,542	Wind angle: 90 dgr					
Permanent loads yg= 0.!		25113	112911	208075	25113	112911	-208075	50,226	225,822	0	0	11065,28	50,226	0	225,822						
Wind angle:	380C1F2 / 3	25112	110713	205773	25112	110713	-205773	50,224	221,426	0	0	8967,753	50,224	0	221,426						
	380C1F3 / 3	25112	108069	203109	25112	108069	-203109	50,224	216,138	0	0	6916,416	50,224	0	216,138						
	150C1F1 /	16278	28228	52019	6278	28228	-52019	12,556	56,456	0	0	2835,402	12,556	0	56,456						
	150C1F2 /	16278	27678	51443	6278	27678	-51443	12,556	55,356	0	0	2310,976	12,556	0	55,356						
	150C1F3 /	16278	27017	50777	6278	27017	-50777	12,556	54,034	0	0	1798,146	12,556	0	54,034						
4	Comp. gl	4966	19993	39847	4966	19993	-39847	9,932	39,986	0	0	1000,018	9,932	0	39,986	4	0	22554,74	133,184	0	559,534
Constructio	GW opgw	2421	10284	19884	2421	10284	-19884	4,842	20,568	0	0	1184,905	4,842	0	20,568	Wind angle: 90 dgr					
Permanent loads yg= 0.!		15788	67235	131994	15788	67235	-131994	31,576	134,47	0	0	6589,03	31,576	0	134,47						
Wind angle:	380C1F2 / 3	15788	66574	131441	15788	66574	-131441	31,576	133,148	0	0	5392,494	31,576	0	133,148						
	380C1F3 / 3	15788	65782	130818	15788	65782	-130818	31,576	131,564	0	0	4210,048	31,576	0	131,564						
	150C1F1 /	13947	16809	32998	3947	16809	-32998	7,894	33,618	0	0	1690,699	7,894	0	33,618						
	150C1F2 /	13947	16644	32860	3947	16644	-32860	7,894	33,288	0	0	1391,581	7,894	0	33,288						
	150C1F3 /	13947	16446	32704	3947	16446	-32704	7,894	32,892	0	0	1095,961	7,894	0	32,892						
1a	Comp. gl	3465	31889	52105	3462	14575	-29100	6,927	46,464	23,005	563,6225	1152,568	6,927	23,005	46,464	1a	14471,44	29033,81	106,159	353,832	716,536
Wind, 10 dg	GW / opgw	1671	20653	32612	1669	7433	-14394	3,34	28,086	18,218	1046,26	1615,521	3,34	18,218	28,086	Wind angle: -45 dgr					
Permanent loads yg= 0.!		12791	124045	200436	12781	54398	-107977	25,572	178,443	92,459	4530,491	8743,707	25,572	92,459	178,443						
Wind angle:	380C1F2 / 3	12791	117800	191692	12781	53943	-107616	25,572	171,743	84,076	3405,078	6955,592	25,572	84,076	171,743						
	380C1F3 / 3	12789	110005	180763	12781	53398	-107211	25,57	163,403	73,552	2353,664	5228,896	25,57	73,552	163,403						
	150C1F1 /	13198	31011	50109	3195	13600	-26994	6,393	44,611	23,115	1132,635	2221,101	6,393	23,115	44,611						
	150C1F2 /	13198	29450	47923	3195	13486	-26904	6,393	42,936	21,019	851,2695	1774,07	6,393	21,019	42,936						
	150C1F3 /	13197	27501	45191	3195	13349	-26803	6,392	40,85	18,388	588,416	1342,356	6,392	18,388	40,85						
1b	Comp. gl	3461	17403	34068	3461	15441	-32682	6,922	32,844	1,386	33,957	818,8681	6,922	1,386	32,844	1b	918,6718	20857,18	106,066	22,062	517,396
Wind, -20 d	GW / opgw	1669	9248	17501	1668	7571	-15926	3,337	16,819	1,575	90,45225	968,4546	3,337	1,575	16,819	Wind angle: -45 dgr					
Permanent loads yg= 0.!		12775	66909	130388	12774	58791	-124344	25,549	125,7	6,044	296,156	6159,3	25,549	6,044	125,7						
Wind angle:	380C1F2 / 3	12775	66054	129483	12774	58735	-124345	25,549	124,789	5,138	208,089	5053,955	25,549	5,138	124,789						
	380C1F3 / 3	12774	65032	128446	12774	58665	-124348	25,548	123,697	4,098	131,136	3958,304	25,548	4,098	123,697						
	150C1F1 /	13194	16727	32597	3193	14698	-31086	6,387	31,425	1,511	74,039	1574,954	6,387	1,511	31,425						
	150C1F2 /	13194	16514	32371	3193	14684	-31086	6,387	31,198	1,285	52,0425	1298,648	6,387	1,285	31,198						
	150C1F3 /	13194	16258	32112	3193	14666	-31087	6,387	30,924	1,025	32,8	1024,697	6,387	1,025	30,924						
3	Comp. gl	17520	58644	109062	17518	50360	-105786	35,038	109,004	3,276	80,262	2742,426	35,038	3,276	109,004	3	2764,027	37348,07	240,741	66,398	932,625
Wind+ice, -	GW / opgw	8688	31935	56483	8685	25231	-52518	17,373	57,166	3,965	227,71	3296,264	17,373	3,965	57,166	Wind angle: -45 dgr					

Permanent loads yg= 0.125113		115309	210660	25109	91851	-192124	50,222	207,16	18,536	908,264	10150,84	50,222	18,536	207,16			
Wind angle:	380C1F2 / 325113	112877	208039	25109	91689	-192120	50,222	204,566	15,919	644,7195	8284,923	50,222	15,919	204,566			
	380C1F3 / 325112	109949	204991	25109	91490	-192121	50,221	201,439	12,87	411,84	6446,048	50,221	12,87	201,439			
	150C1F1 / 16278	28827	52665	6277	22963	-48031	12,555	51,79	4,634	227,066	2606,763	12,555	4,634	51,79			
	150C1F2 / 16278	28219	52010	6277	22922	-48030	12,555	51,141	3,98	161,19	2140,263	12,555	3,98	51,141			
	150C1F3 / 16278	27487	51248	6277	22872	-48030	12,555	50,359	3,218	102,976	1680,541	12,555	3,218	50,359			
4	Comp. gl 4966	20153	39964	4966	18525	-39296	9,932	38,678	0,668	16,366	967,9716	9,932	0,668	38,678			
Constructior GW cqqw	2421	10421	20014	2421	9081	-19165	4,842	19,502	0,849	48,75807	1123,685	4,842	0,849	19,502			
Permanent loads yg= 0.115789		67957	132629	15788	60801	-128652	31,577	128,758	3,977	194,873	6309,142	31,577	3,977	128,758			
Wind angle:	380C1F2 / 315788	67224	131985	15788	60747	-128658	31,576	127,971	3,327	134,7435	5182,826	31,576	3,327	127,971			
	380C1F3 / 315788	66345	131256	15788	60680	-128668	31,576	127,025	2,588	82,816	4064,8	31,576	2,588	127,025			
	150C1F1 / 13947	16989	33157	3947	15200	-32163	7,894	32,189	0,994	48,706	1620,678	7,894	0,994	32,189			
	150C1F2 / 13947	16806	32996	3947	15187	-32165	7,894	31,993	0,831	33,6555	1339,134	7,894	0,831	31,993			
	150C1F3 / 13947	16586	32814	3947	15170	-32167	7,894	31,756	0,647	20,704	1059,609	7,894	0,647	31,756			
															4	580,6221	21667,84	133,185	13,881	537,872
															Wind angle: -45 dgr					

W4H400Z+14-Y1

Hoogte mast	Ber & bijlage		50	m		
Hoogte onderste stroomdraad (F3)			24	m		
			Hoogte		Excentriciteit ophanging t.o.v. hart mast	
Bliksemdraad = GW / (H_{mast} -	0,57	m =	49,43	m	0,761	m
1e traverse - 380C1F1 F2 +	8,5	m =	41	m	0	m
1e traverse - 150C1F1			41		5,5	m
2e traverse - 380C1F2 F3 +	8,5	m =	32,5	m	0	m
2e traverse - 150C1F2 F3 +			32,5	m	5,5	m
3e traverse - 380C1F3			24	m	0	m
3e traverse - 150C1F3			24		5,5	m
Passieve lijn = Comp C F3 -	7,5	m =	16,5	m	2,087	m

Uit mast (excl belastingsfactoren)			Uit lijnen (incl belastingsfactoren)				
N	V	M	Nmin	Nmax	Vmax	Mlangs;ma	Mdwars;max
[kN]	[kN]	[kNm]	[kN]	[kN]	[kN]	[kNm]	[kNm]
857	116	3147	53	135	756	24201	19719

			Belastingen uit lijnen					Belasting uit mast							Totaal							
			M_{langs}	M_{dwars}	N	V_{langs}	V_{dwars}	N	V	M	regel			Loadcase	M_{langs}	M_{dwars}	N	V_{langs}	V_{dwars}	Totaal moment		
Perm load 1,2	0 deg	1a	-17847	8812	71	-558	273	857	116	3147	1	Perm load 1,2	0 deg	1a	-14700	8812	928	-442	273	17138,61	1	
		1b	-20401	9720	71	-637	301	857	22	590	2	Perm load 1,2	0 deg	1b	-19811	9720	928	-616	301	22067,31	2	
		3	-21942	10714	86	-689	333	857	33	885	3	Perm load 1,2	0 deg	3	-21057	10714	943	-656	333	23625,95	3	
		4	-20314	9693	82	-636	300	857	22	590	4	Perm load 1,2	0 deg	4	-19724	9693	939	-614	300	21976,84	4	
		6	-19579	9222	80	-612	285				5	Perm load 1,2	0 deg	6							5	
											6										6	
	45 deg	1a	-21033	11910	71	-653	366	857	116	3147	7	Perm load 1,2	45 deg	1a	23258	14136	928	735	449	27216,93	7	
		1b	-20655	10334	71	-645	320	857	22	590	8	Perm load 1,2	45 deg	1b	21072	10752	928	660	335	23656,52	8	
		3	-24201	13270	86	-756	411	857	33	885	9	Perm load 1,2	45 deg	3	24827	13896	943	780	434	28451,53	9	x x x
		4	-20482	10267	82	-641	318	857	22	590	10	Perm load 1,2	45 deg	4	20899	10684	939	656	333	23471,44	10	
											11										11	
	90 deg	1a	-20619	11576	71	-641	356	857	116	3147	12	Perm load 1,2	90 deg	1a	-20619	14723	928	-641	472	25335,48	12	
		1b	-20610	10270	71	-644	318	857	22	590	13	Perm load 1,2	90 deg	1b	-20610	10860	928	-644	340	23296,56	13	
		3	-23891	12993	86	-747	402	857	33	885	14	Perm load 1,2	90 deg	3	-23891	13879	943	-747	435	27629,2	14	
		4	-20449	10208	82	-640	316	857	22	590	15	Perm load 1,2	90 deg	4 Construc	-20449	10798	939	-640	338	23124,5	15	
											16										16	
	-45 deg	1a	-17790	8645	71	-556	268	857	116	3147	17	Perm load 1,2	-45 deg	1a	20016	10870	928	638	350	22776,94	17	
		1b	-20407	9680	71	-638	300	857	22	590	18	Perm load 1,2	-45 deg	1b	20824	10097	928	653	315	23142,77	18	
		3	-21914	10569	86	-688	328	857	33	885	19	Perm load 1,2	-45 deg	3	22540	11195	943	711	352	25166,94	19	
		4	-20322	9653	82	-636	299	857	22	590	20	Perm load 1,2	-45 deg	4	20739	10070	939	651	314	23054,57	20	
											21										21	
	0 deg	1a	-14196	7089	53	-444	219	857	116	3147	22	Perm load 0,9	0 deg	1a	-11049	7089	910	-328	219	13127,79	22	
		1b	-16482	7872	53	-515	244	857	22	590	23	Perm load 0,9	0 deg	1b	-15892	7872	910	-493	244	17734,54	23	
		3	-18371	9028	68	-577	281	857	33	885	24	Perm load 0,9	0 deg	3	-17486	9028	925	-545	281	19679,32	24	
		4	-16713	7993	64	-523	248	857	22	590	25	Perm load 0,9	0 deg	4	-16123	7993	921	-501	248	17995,12	25	
		6	-14076	6625	53	-440	205				26	Perm load 0,9	0 deg	6							26	
											27										27	
	45 deg	1a	-18519	10717	53	-574	329	857	116	3147	28	Perm load 0,9	45 deg	1a	20744	12943	910	656	411	24450,75	28	
		1b	-16929	8576	53	-528	265	857	22	590	29	Perm load 0,9	45 deg	1b	17346	8994	910	544	281	19538,75	29	
		3	-21386	11936	68	-668	369	857	33	885	30	Perm load 0,9	45 deg	3	22012	12562	925	691	392	25344,28	30	
		4	-17007	8626	64	-532	267	857	22	590	31	Perm load 0,9	45 deg	4 Construc	17424	9043	921	547	282	19631,25	31	
											32										32	
	90 deg	1a	-18000	10334	53	-558	318	857	116	3147	33	Perm load 0,9	90 deg	1a	-18000	13481	910	-558	434	22488,96	33	
		1b	-16858	8500	53	-526	263	857	22	590	34	Perm load 0,9	90 deg	1b	-16858	9090	910	-526	285	19153,1	34	
		3	-20995	11622	68	-656	360	857	33	885	35	Perm load 0,9	90 deg	3	-20995	12507	925	-656	392	24437,97	35	
		4	-16957	8559	64	-530	265	857	22	590	36	Perm load 0,9	90 deg	4	-16957	9149	921	-530	287	19267,81	36	
											37										37	
	-45 deg	1a	-14093	**6900**	53	-440	**214**	857	116	3147	38	Perm load 0,9	-45 deg	1a	16318	9126	910	522	296	18696,63	38	
		1b	-16482	7829	**53**	-515	243	857	22	590	39	Perm load 0,9	-45 deg	1b	16899	8246	910	530	258	18804,09	39	
		3	**-18317**	8871	68	**-576**	276	857	33	885	40	Perm load 0,9	-45 deg	3	18943	9497	925	599	299	21190,52	40	
		4	-16717	7952	64	-523	247	857	22	590	41	Perm load 0,9	-45 deg	4	17134	8369	921	539	262	19069,02	41	
											42										42	
	0 deg	1a	**-8081**	13624	113	**-222**	436	857	116	3147	43	Perm load 1,2	0 deg	1a	-4934	13624	970	-106	436	14489,98	43	
		1b	-9212	15050	113	-253	483	857	22	590	44	Perm load 1,2	0 deg	1b	-8622	15050	970	-231	483	17344,64	44	
		3	-10257	16398	135	-287	526	857	33	885	45	Perm load 1,2	0 deg	3	-9372	16398	992	-255	526	18887,54	45	
		4	-9268	14962	130	-256	479	857	22	590	46	Perm load 1,2	0 deg	4	-8678	14962	987	-234	479	17296,58	46	
		6	-8859	14274	128	-244	457				47	Perm load 1,2	0 deg	6							47	
											48										48	
	45 deg	1a	-11292	16637	113	-319	527	857	116	3147	49	Perm load 1,2	45 deg	1a	13518	18863	970	401	609	23206,29	49	
		1b	-9463	15643	113	-260	501	857	22	590	50	Perm load 1,2	45 deg	1b	9880	16060	970	276	516	18855,71	50	
		3	-12525	18888	135	-355	602	857	33	885	51	Perm load 1,2	45 deg	3	13151	19514	992	378	625	23531,65	51	
		4	-9432	15516	130	-261	496	857	22	590	52	Perm load 1,2	45 deg	4	9849	15933	987	276	512	18731,14	52	
											53										53	
	90 deg	1a	-9505	17776	113	-260	567	857	116	3147	54	Perm load 1,2	90 deg	1a	-9505	20923	970	-260	683	22980,94	54	x x
		1b	-9327	15877	113	-256	509	857	22	590	55	Perm load 1,2	90 deg	1b	-9327	16467	970	-256	530	18925,21	55	
		3	-11374	**19719**	**135**	-318	**631**	857	33	885	56	Perm load 1,2	90 deg	3	-11374	20604	992	-318	663	23534,82	56	x
		4	-9342	15740	130	-258	504	857	22	590	57	Perm load 1,2	90 deg	4 Construc	-9342	16330	987	-258	526	18812,86	57	
											58										58	
	-45 deg	1a	-6471	15014	113	-168	484	857	116	3147	59	Perm load 1,2	-45 deg	1a	8697	17239	970	250	566	19308,68	59	
		1b	-9102	15319	113	-249	492	857	22	590	60	Perm load 1,2	-45 deg	1b	9519	15736	970	265	507	18391,5	60	
		3	-9259	17422	135	-254	561	857	33	885	61	Perm load 1,2	-45 deg	3	9885	18047	992	277	584	20577,21	61	
		4	-9199	15214	130	-254	488	857	22	590	62	Perm load 1,2	-45 deg	4	9616	15631	987	269	504	18352,58	62	
											63										63	
	0 deg	1a	-6431	10956	85	-177	351	857	116	3147	64	Perm load 0,9	0 deg	1a	-3284	10956	942	-61	351	11438,06	64	
		1b	-7435	12191	85	-204	391	857	22	590	65	Perm load 0,9	0 deg	1b	-6845	12191	942	-182	391	13981,06	65	
		3	-8660	13780	107	-243	443	857	33	885	66	Perm load 0,9	0 deg	3	-7775	13780	964	-211	443	15822,61	66	
		4	-7641	12330	102	-211	395	857	22	590	67	Perm load 0,9	0 deg	4	-7051	12330	959	-190	395	14203,59	67	
		6	-6363	10256	85	-175	329				68	Perm load 0,9	0 deg	6							68	
											69										69	
	45 deg	1a	-10802	14489	85	-309	458	857	116	3147	70	Perm load 0,9	45 deg	1a	13027	16714	942	391	540	21191,62	70	
		1b	-7882	12873	85	-217	412	857	22	590	71	Perm load 0,9	45 deg	1b	8299	13290	942	233	427	15668,16	71	
		3	-11696	16616	107	-335	529	857	33	885	72	Perm load 0,9	45 deg	3	12322	17242	964	358	552	21192,64	72	
		4	-7933	12942	102	-220	414	857	22	590	73	Perm load 0,9	45 deg	4 Construc	8350	13359	959	235	429	15753,89	73	
											74										74	
	90 deg	1a	-8361	15835	85	-228	505	857	116	3147	75	Perm load 0,9	90 deg	1a	-8361	18982	942	-228	621	20742	75	
		1b	-7636	13134	85	-209	421	857	22	590	76	Perm load 0,9	90 deg	1b	-7636	13725	942	-209	443	15705,7	76	
		3	-10119	17571	107	-283	562	857	33	885	77	Perm load 0,9	90 deg	3	-10119	18456	964	-283	595	21047,85	77	
		4	-7769	13184	102	-215	422	857	22	590	78	Perm load 0,9	90 deg	4	-7769	13774	959	-215	444	15814,19	78	
											79										79	
	-45 deg	1a	-4193	12596	85	-102	407	857	116	3147	80	Perm load 0,9	-45 deg	1a	6418	14821	942	184	489	16151,15	80	
		1b	-7226	12501	85	-197	402	857	22	590	81	Perm load 0,9	-45 deg	1b	7643	12919	942	212	417	15010,38	81	
		3	-7262	14966	107	-197	483	857	33	885	82	Perm load 0,9	-45 deg	3	7887	15592	964	220	506	17473,54	82	
		4	-7505	12610	102	-207	405	857	22	590	83	Perm load 0,9	-45 deg	4	7922	13028	959	222	420	15247,29	83	
											84										84	
	0 deg	1a	-9766	12813	99	-336	382	857	116	3147	85	Perm load 1,2	0 deg	1a	-6619	12813	956	-220	382	14421,27	85	
		1b	-11189	14112	99	-384	421	857	22	590	86	Perm load 1,2	0 deg	1b	-10599	14112	956	-363	421	17648,65	86	
		3	-11685	15742	122	-402	472	857	33	885	87	Perm load 1,2	0 deg	3	-10800	15742	979	-369	472	19090,98	87	
		4	-11046	14117	115	-380	421	857	22	590	88	Perm load 1,2	0 deg	4	-10455	14117	972	-358	421	17566,87	88	
		6	-10721	13392	111	-368	399				89	Perm load 1,2	0 deg	6							89	
											90										90	
	45 deg	1a	-12983	15828	99	-432	473	857	116	3147	91	Perm load 1,2	45 deg	1a	15209	18053	956	514	555	23605,55	91	
		1b	-11440	14706	99	-392	439	857	22	590	92	Perm load 1,2	45 deg	1b	11857	15123	956	407	454	19217,28	92	
		3	-13963	18221	122	-470	548	857	33	885	93	Perm load 1,2	45 deg	3	14589	18847	979	493	571	23833,86	93	
		4	-11210	14671	115	-384	438	857	22	590	94	Perm load 1,2	45 deg	4	11627	15089	972	400	454	19048,57	94	
											95										95	
	90 deg	1a	-11113	16952	99	-381	502	857	116	3147	96	Perm load 1,2	90 deg	1a	-11113	20099	956	-381	618	22966,43	96	
		1b	-11284	14934	99	-388	445	857	22	590	97	Perm load 1,2	90 deg	1b	-11284	15524	956	-388	466	19191,17	97	
		3	-12517	19261	122	-429	576	857	33	885	98	Perm load 1,2	90 deg	3	-12517	20146	979	-429	609	23718,11	98	
		4	-11107	14885	115	-382	444	857	22	590	99	Perm load 1,2	90 deg	4 Construc	-11107	15475	972	-382	466	19048,19	99	
											100										100	
	-45 deg	1a	-8076	14186	99	-290	418	857	116	3147	101	Perm load 1,2	-45 deg	1a	10302	16412	956	373	500	19376,87	101	
		1b	-11056	14375	99	-381	428	857	22	590	102	Perm load 1,2	-45 deg	1b	11474	14792	956	396	443	18720,42	102	
		3	-10368	16986	122	-366	506	857	33	885	103	Perm load 1,2	-45 deg	3	10993	17612	979	389	529	20761,66	103	
		4	-10962,699	14358,78	114,554	-377,486	427,709	857	22	590	104	Perm load 1,2	-45 deg	4	11380	14776	972	393	443	18650,29	104	
											105										105	
	0 deg	1a	-7764,899	10311,79	74,166	-266,761	307,051	857	116	3147	106	Perm load 0,9	0 deg	1a	-4618	10312	931	-151	307	11298,58	106	
		1b	-9046,132	11426,32	74,126	-310,863	340,741	857	22	590	107	Perm load 0,9	0 deg	1b	-8456	11426	931	-289	341	14214,99	107	
		3	-9710,964	13303,57	97,382	-333,674	399,968	857	33	885	108	Perm load 0,9	0 deg	3	-8826	13304	954	-301	400	15964,99	108	
		4	-9072	11649	90	-312	348	857	22	590	109	Perm load 0,9	0 deg	4	-8482	11649	947	-290	348	14409,73	109	
		6	-7712,195	9618,159	74,166	-265,024	286,78				110	Perm load 0,9	0 deg	6							110	
											111										111	
	45 deg	1a	-12143,099	13845,87	74,182	-398,515	414,615	857	116	3147	112	Perm load 0,9	45 deg	1a	14368	16071	931	481	497	21557,62	112	
		1b	-9493,4401	12109,21	74,129	-324,116	361,512	857	22	590	113	Perm load 0,9	45 deg	1b	9911	12526	931	339	377	15972,9	113	
		3	-12758,344	16127,8	97,394	-425,275	486,206	857	33	885	114	Perm load 0,9	45 deg	3	13384	16754	954	448	509	21443,46	114	
		4	-9364,3406	12262,1	89,806	-320,371	366,685	857	22	590	115	Perm load 0,9	45 deg	4 Construc	9782	12679	947	336	382	16013,9	115	
											116										116	
	90 deg	1a	-9639,02	15167,68	74,188	-329,849	448,662	857	116	3147	117	Perm load 0,9	90 deg	1a	-9639	18315	931	-330	565	20696,34	117	
		1b	-9222,6365	12366,26	74,13	-316,755	368,133	857	22	590	118	Perm load 0,9	90 deg	1b	-9223	12956	931	-317	390	15903,56	118	
		3	-10875,731	17296,33	97,4	-372,789	517,516	857	33	885	119	Perm load 0,9	90 deg	3	-10876	18181	954	-373	550	21185,98	119	
		4	-9187,8085	12494,02	89,806	-315,607	372,661	857	22	590	120	Perm load 0,9	90 deg	4	-9188	13084	947	-316	394	15987,77	120	
											121										121	
	-45 deg	1a	-5474,2985	11922,11	74,173	-205,331	349,579	857	116	3147	122	Perm load 0,9	-45 deg	1a	7700	14147	931	287	432	16106,88	122	
		1b	-8809,7364	11733,25	74,127	-304,658	348,801	857	22	590	123	Perm load 0,9	-45 deg	1b	9227	12150	931	320	364	15256,85	123	
		3	-7986,877	14712,77	97,388	-286,542	438,388	857	33	885	124	Perm load 0,9	-45 deg	3	8613	15339	954	310	461	17591,26	124	
		4	-8922,2894	11919,34	89,805	-307,891	355,089	857	22	590	125	Perm load 0,9	-45 deg	4	9340	12337	947	323	370	15473,14	125	
															24827	20923	992	780	683	28452		

samenvatting

	Mast	Bijlage	Wind		Loadcase	M_{langs}	M_{dwars}	N	V_{langs}	V_{dwars}
9	W4H400Z+14-Y1		Perm load	45 deg	3	24827	13896	943	780	434
54	W4H400Z+14-Y1		Perm load	90 deg	1a	-9505	20923	970	-260	683
56	W4H400Z+14-Y1		Perm load	90 deg	3	-11374	20604	992	-318	663

W4H400Z+5 TOWER APPENDIX: Y1

Loadcases for tower strength (Special limit state)

Loadcase according to

50341-3-15			**AHEAD**			**BACK**	
	Attachmentpc	[N]	[N]	[N]	[N]	[N]	[N]
1a	Comp. gl	4617	17812	-36487	0	0	0
Wind, 10 dg	GW / opgw	2226	8849	-17748	0	0	0
Permanent loads yg= 1.:		17045	65886	-134400	0	0	0
Wind angle:	380C1F2 / 3	17045	65601	-134276	0	0	0
	380C1F3 / 3	17045	65254	-134141	0	0	0
	150C1F1 / 1	4261	16472	-33600	0	0	0
	150C1F2 / 1	4261	16400	-33569	0	0	0
	150C1F3 / 1	4261	16314	-33535	0	0	0
1b	Comp. gl	4615	19287	-40835	0	0	0
Wind, -20 d	GW / opgw	2225	9457	-19902	0	0	0
Permanent loads yg= 1.:		17036	72701	-153788	0	0	0
Wind angle:	380C1F2 / 3	17036	72634	-153794	0	0	0
	380C1F3 / 3	17036	72551	-153803	0	0	0
	150C1F1 / 1	4259	18175	-38447	0	0	0
	150C1F2 / 1	4259	18158	-38448	0	0	0
	150C1F3 / 1	4259	18138	-38451	0	0	0
3	Comp. gl	7762	28198	-57773	0	0	0
Wind+ice, -	GW / opgw	3796	14204	-28522	0	0	0

Totaal			Belastingen op mastvoet, per lijn				
Vert	Dwars	Langs	M_{langs}	M_{dwars}	N	V_{langs}	V_{dwars}
[kN]	[kN]	[kN]					
4,617	17,812	-36,487	-602,036	303,5337	4,617	-36,487	17,812
2,226	8,849	-17,748	-877,284	439,1001	2,226	-17,748	8,849
17,045	65,886	-134,4	-5510,4	2701,326	17,045	-134,4	65,886
17,045	65,601	-134,276	-4363,97	2132,033	17,045	-134,276	65,601
17,045	65,254	-134,141	-3219,38	1566,096	17,045	-134,141	65,254
4,261	16,472	-33,6	-1377,6	698,7875	4,261	-33,6	16,472
4,261	16,4	-33,569	-1090,99	556,4355	4,261	-33,569	16,4
4,261	16,314	-33,535	-804,84	414,9715	4,261	-33,535	16,314
4,615	19,287	-40,835	-673,778	327,867	4,615	-40,835	19,287
2,225	9,457	-19,902	-983,756	469,1527	2,225	-19,902	9,457
17,036	72,701	-153,788	-6305,31	2980,741	17,036	-153,788	72,701
17,036	72,634	-153,794	-4998,31	2360,605	17,036	-153,794	72,634
17,036	72,551	-153,803	-3691,27	1741,224	17,036	-153,803	72,551
4,259	18,175	-38,447	-1576,33	768,5995	4,259	-38,447	18,175
4,259	18,158	-38,448	-1249,56	613,5595	4,259	-38,448	18,158
4,259	18,138	-38,451	-922,824	458,7365	4,259	-38,451	18,138
7,762	28,198	-57,773	-953,255	481,4663	7,762	-57,773	28,198
3,796	14,204	-28,522	-1409,84	704,9925	3,796	-28,522	14,204

Belasting op mastvoet, belastinggeval

	M_{langs}	M_{dwars}	N	V_{langs}	V_{dwars}
1a	-17846,5	8812,283	70,761	-557,756	272,588
Wind angle: 0 dgr					
1b	-20401,1	9720,485	70,725	-637,468	301,101
Wind angle: 0 dgr					
3	-21942,3	10713,57	85,817	-688,693	332,869
Wind angle: 0 dgr					

Permanent loads yg= 1.:		19802	77697	-160698	0	0	0	19,802	77,697	-160,698	-6588,62	3185,577	19,802	-160,698	77,697						
Wind angle:	380C1F2 / 3	19802	77474	-160640	0	0	0	19,802	77,474	-160,64	-5220,8	2517,905	19,802	-160,64	77,474						
	380C1F3 / 3	19802	77203	-160581	0	0	0	19,802	77,203	-160,581	-3853,94	1852,872	19,802	-160,581	77,203						
	150C1F1 / 1	4951	19424	-40174	0	0	0	4,951	19,424	-40,174	-1647,13	823,6145	4,951	-40,174	19,424						
	150C1F2 / 1	4951	19368	-40160	0	0	0	4,951	19,368	-40,16	-1305,2	656,6905	4,951	-40,16	19,368						
	150C1F3 / 1	4951	19301	-40145	0	0	0	4,951	19,301	-40,145	-963,48	490,4545	4,951	-40,145	19,301						
4	Comp. gl	5821	21063	-44642	0	0	0	5,821	21,063	-44,642	-736,593	359,6879	5,821	-44,642	21,063	4	-20313,9	9692,831	81,591	-635,712	300,285
Constructio	GW opgw	2828	10306	-21724	0	0	0	2,828	10,306	-21,724	-1073,82	511,5777	2,828	-21,724	10,306	Wind angle: 0 dgr					
Permanent loads yg= 1.:		19451	71782	-151815	0	0	0	19,451	71,782	-151,815	-6224,42	2943,062	19,451	-151,815	71,782						
Wind angle:	380C1F2 / 3	19451	71716	-151824	0	0	0	19,451	71,716	-151,824	-4934,28	2330,77	19,451	-151,824	71,716						
	380C1F3 / 3	19451	71635	-151838	0	0	0	19,451	71,635	-151,838	-3644,11	1719,24	19,451	-151,838	71,635						
	150C1F1 / 1	4863	17945	-37954	0	0	0	4,863	17,945	-37,954	-1556,11	762,4915	4,863	-37,954	17,945						
	150C1F2 / 1	4863	17929	-37956	0	0	0	4,863	17,929	-37,956	-1233,57	609,439	4,863	-37,956	17,929						
	150C1F3 / 1	4863	17909	-37959	0	0	0	4,863	17,909	-37,959	-911,016	456,5625	4,863	-37,959	17,909						
6	Comp. gl	5195	18706	-40116	0	0	0	5,195	18,706	-40,116	-661,914	319,491	5,195	-40,116	18,706	6	-19579,2	9221,762	79,613	-612,096	285,424
Permanent,	GW / opgw	2505	9033	-19371	0	0	0	2,505	9,033	-19,371	-957,509	448,4075	2,505	-19,371	9,033	0					
Permanent loads yg= 1.:		19177	68716	-147362	0	0	0	19,177	68,716	-147,362	-6041,84	2817,356	19,177	-147,362	68,716						
	380C1F2 / 3	19177	68716	-147362	0	0	0	19,177	68,716	-147,362	-4789,27	2233,27	19,177	-147,362	68,716						
	380C1F3 / 3	19177	68716	-147362	0	0	0	19,177	68,716	-147,362	-3536,69	1649,184	19,177	-147,362	68,716						
	150C1F1 / 1	4794	17179	-36841	0	0	0	4,794	17,179	-36,841	-1510,48	730,706	4,794	-36,841	17,179						
	150C1F2 / 1	4794	17179	-36841	0	0	0	4,794	17,179	-36,841	-1197,33	584,6845	4,794	-36,841	17,179						
	150C1F3 / 1	4794	17179	-36841	0	0	0	4,794	17,179	-36,841	-884,184	438,663	4,794	-36,841	17,179						
1a	Comp. gl	4618	23814	-42605	0	0	0	4,618	23,814	-42,605	-702,983	402,5688	4,618	-42,605	23,814	1a	-21033	11910,25	70,777	-653,387	366,498
Wind, 10 dg	GW / opgw	2227	13884	-23705	0	0	0	2,227	13,884	-23,705	-1171,74	687,9809	2,227	-23,705	13,884	Wind angle: 45 dgr					
Permanent loads yg= 1.:		17049	90568	-160135	0	0	0	17,049	90,568	-160,135	-6565,54	3713,288	17,049	-160,135	90,568						
Wind angle:	380C1F2 / 3	17049	87869	-156762	0	0	0	17,049	87,869	-156,762	-5094,77	2855,743	17,049	-156,762	87,869						
	380C1F3 / 3	17048	84603	-152765	0	0	0	17,048	84,603	-152,765	-3666,36	2030,472	17,048	-152,765	84,603						
	150C1F1 / 1	4262	22642	-40034	0	0	0	4,262	22,642	-40,034	-1641,39	951,763	4,262	-40,034	22,642						
	150C1F2 / 1	4262	21967	-39190	0	0	0	4,262	21,967	-39,19	-1273,68	737,3685	4,262	-39,19	21,967						
	150C1F3 / 1	4262	21151	-38191	0	0	0	4,262	21,151	-38,191	-916,584	531,065	4,262	-38,191	21,151						
1b	Comp. gl	4615	20473	-41302	0	0	0	4,615	20,473	-41,302	-681,483	347,436	4,615	-41,302	20,473	1b	-20654,8	10334,41	70,725	-644,922	319,739
Wind, -20 d	GW / opgw	2225	10440	-20522	0	0	0	2,225	10,44	-20,522	-1014,4	517,7424	2,225	-20,522	10,44	Wind angle: 45 dgr					
Permanent loads yg= 1.:		17036	77573	-155875	0	0	0	17,036	77,573	-155,875	-6390,88	3180,493	17,036	-155,875	77,573						
Wind angle:	380C1F2 / 3	17036	77055	-155507	0	0	0	17,036	77,055	-155,507	-5053,98	2504,288	17,036	-155,507	77,055						
	380C1F3 / 3	17036	76433	-155096	0	0	0	17,036	76,433	-155,096	-3722,3	1834,392	17,036	-155,096	76,433						
	150C1F1 / 1	4259	19393	-38969	0	0	0	4,259	19,393	-38,969	-1597,73	818,5375	4,259	-38,969	19,393						
	150C1F2 / 1	4259	19264	-38877	0	0	0	4,259	19,264	-38,877	-1263,5	649,5045	4,259	-38,877	19,264						
	150C1F3 / 1	4259	19108	-38774	0	0	0	4,259	19,108	-38,774	-930,576	482,0165	4,259	-38,774	19,108						
3	Comp. gl	7764	36772	-65513	0	0	0	7,764	36,772	-65,513	-1080,96	622,9415	7,764	-65,513	36,772	3	-24201,5	13269,9	85,83	-756,447	410,723
Wind+ice, -	GW / opgw	3797	21330	-36151	0	0	0	3,797	21,33	-36,151	-1786,94	1057,231	3,797	-36,151	21,33	Wind angle: 45 dgr					
Permanent loads yg= 1.:		19806	96215	-177046	0	0	0	19,806	96,215	-177,046	-7258,89	3944,815	19,806	-177,046	96,215						
Wind angle:	380C1F2 / 3	19805	94170	-174735	0	0	0	19,805	94,17	-174,735	-5678,89	3060,525	19,805	-174,735	94,17						
	380C1F3 / 3	19805	91711	-172045	0	0	0	19,805	91,711	-172,045	-4129,08	2201,064	19,805	-172,045	91,711						
	150C1F1 / 1	4951	24054	-44262	0	0	0	4,951	24,054	-44,262	-1814,74	1013,445	4,951	-44,262	24,054						
	150C1F2 / 1	4951	23543	-43684	0	0	0	4,951	23,543	-43,684	-1419,73	792,378	4,951	-43,684	23,543						
	150C1F3 / 1	4951	22928	-43011	0	0	0	4,951	22,928	-43,011	-1032,26	577,5025	4,951	-43,011	22,928						
4	Comp. gl	5821	22141	-44877	0	0	0	5,821	22,141	-44,877	-740,471	377,4749	5,821	-44,877	22,141	4	-20481,5	10266,89	81,591	-640,592	317,731
Constructio	GW opgw	2828	11174	-22095	0	0	0	2,828	11,174	-22,095	-1092,16	554,4829	2,828	-22,095	11,174	Wind angle: 45 dgr					
Permanent loads yg= 1.:		19451	76354	-153254	0	0	0	19,451	76,354	-153,254	-6283,41	3130,514	19,451	-153,254	76,354						
Wind angle:	380C1F2 / 3	19451	75877	-152975	0	0	0	19,451	75,877	-152,975	-4971,69	2466,003	19,451	-152,975	75,877						
	380C1F3 / 3	19451	75302	-152666	0	0	0	19,451	75,302	-152,666	-3663,98	1807,248	19,451	-152,666	75,302						
	150C1F1 / 1	4863	19088	-38314	0	0	0	4,863	19,088	-38,314	-1570,87	809,3545	4,863	-38,314	19,088						
	150C1F2 / 1	4863	18969	-38244	0	0	0	4,863	18,969	-38,244	-1242,93	643,239	4,863	-38,244	18,969						
	150C1F3 / 1	4863	18826	-38167	0	0	0	4,863	18,826	-38,167	-916,008	478,5705	4,863	-38,167	18,826						
1a	Comp. gl	4618	23161	-41797	0	0	0	4,618	23,161	-41,797	-689,651	391,7943	4,618	-41,797	23,161	1a	-20618,5	11575,87	70,776	-640,867	356,343
Wind, 10 dg	GW / opgw	2227	13358	-23000	0	0	0	2,227	13,358	-23	-1136,89	661,9807	2,227	-23	13,358	Wind angle: 90 dgr					
Permanent loads yg= 1.:		17049	87907	-156809	0	0	0	17,049	87,907	-156,809	-6429,17	3604,187	17,049	-156,809	87,907						
Wind angle:	380C1F2 / 3	17048	85456	-153799	0	0	0	17,048	85,456	-153,799	-4998,47	2777,32	17,048	-153,799	85,456						
	380C1F3 / 3	17048	82496	-150248	0	0	0	17,048	82,496	-150,248	-3605,95	1979,904	17,048	-150,248	82,496						
	150C1F1 / 1	4262	21977	-39202	0	0	0	4,262	21,977	-39,202	-1607,28	924,498	4,262	-39,202	21,977						
	150C1F2 / 1	4262	21364	-38450	0	0	0	4,262	21,364	-38,45	-1249,63	717,771	4,262	-38,45	21,364						
	150C1F3 / 1	4262	20624	-37562	0	0	0	4,262	20,624	-37,562	-901,488	518,417	4,262	-37,562	20,624						
1b	Comp. gl	4615	20350	-41219	0	0	0	4,615	20,35	-41,219	-680,114	345,4065	4,615	-41,219	20,35	1b	-20610,2	10270,31	70,725	-643,598	317,797
Wind, -20 d	GW / opgw	2225	10334	-20425	0	0	0	2,225	10,334	-20,425	-1009,61	512,5028	2,225	-20,425	10,334	Wind angle: 90 dgr					
Permanent loads yg= 1.:		17036	77063	-155512	0	0	0	17,036	77,063	-155,512	-6375,99	3159,583	17,036	-155,512	77,063						
Wind angle:	380C1F2 / 3	17036	76595	-155199	0	0	0	17,036	76,595	-155,199	-5043,97	2489,338	17,036	-155,199	76,595						
	380C1F3 / 3	17036	76032	-154852	0	0	0	17,036	76,032	-154,852	-3716,45	1824,768	17,036	-154,852	76,032						
	150C1F1 / 1	4259	19266	-38878	0	0	0	4,259	19,266	-38,878	-1594	813,3305	4,259	-38,878	19,266						
	150C1F2 / 1	4259	19149	-38800	0	0	0	4,259	19,149	-38,8	-1261	645,767	4,259	-38,8	19,149						
	150C1F3 / 1	4259	19008	-38713	0	0	0	4,259	19,008	-38,713	-929,112	479,6165	4,259	-38,713	19,008						
3	Comp. gl	7763	35850	-64466	0	0	0	7,763	35,85	-64,466	-1063,69	607,7264	7,763	-64,466	35,85	3	-23890,6	12993,42	85,827	-747,047	402,292
Wind+ice, -	GW / opgw	3797	20587	-35227	0	0	0	3,797	20,587	-35,227	-1741,27	1020,505	3,797	-35,227	20,587	Wind angle: 90 dgr					
Permanent loads yg= 1.:		19805	94199	-174767	0	0	0	19,805	94,199	-174,767	-7165,45	3862,159	19,805	-174,767	94,199						
Wind angle:	380C1F2 / 3	19805	92352	-172736	0	0	0	19,805	92,352	-172,736	-5613,92	3001,44	19,805	-172,736	92,352						
	380C1F3 / 3	19804	90133	-170380	0	0	0	19,804	90,133	-170,38	-4089,12	2163,192	19,804	-170,38	90,133						
	150C1F1 / 1	4951	23550	-43692	0	0	0	4,951	23,55	-43,692	-1791,37	992,7805	4,951	-43,692	23,55						
	150C1F2 / 1	4951	23088	-43184	0	0	0	4,951	23,088	-43,184	-1403,48	777,5905	4,951	-43,184	23,088						
	150C1F3 / 1	4951	22533	-42595	0	0	0	4,951	22,533	-42,595	-1022,28	568,0225	4,951	-42,595	22,533						
4	Comp. gl	5821	22032	-44825	0	0	0	5,821	22,032	-44,825	-739,613	375,6764	5,821	-44,825	22,032	4	-20448,5	10208,13	81,591	-639,616	315,949
Constructio	GW opgw	2828	11083	-22030	0	0	0	2,828	11,083	-22,03	-1088,94	549,9848	2,828	-22,03	11,083	Wind angle: 90 dgr					
Permanent loads yg= 1.:		19451	75884	-152978	0	0	0	19,451	75,884	-152,978	-6272,1	3111,244	19,451	-152,978	75,884						
Wind angle:	380C1F2 / 3	19451	75452	-152744	0	0	0	19,451	75,452	-152,744	-4964,18	2452,19	19,451	-152,744	75,452						
	380C1F3 / 3	19451	74931	-152486	0	0	0	19,451	74,931	-152,486	-3659,66	1798,344	19,451	-152,486	74,931						
	150C1F1 / 1	4863	18971	-38245	0	0	0	4,863	18,971	-38,245	-1568,05	804,5575	4,863	-38,245	18,971						
	150C1F2 / 1	4863	18863	-38186	0	0	0	4,863	18,863	-38,186	-1241,05	639,794	4,863	-38,186	18,863						
	150C1F3 / 1	4863	18733	-38122	0	0	0	4,863	18,733	-38,122	-914,928	476,3385	4,863	-38,122	18,733						
1a	Comp. gl	4617	17489	-36384	0	0	0	4,617	17,489	-36,384	-600,336	298,2042	4,617	-36,384	17,489	1a	-17790,4	8645,051	70,761	-556,115	267,508
Wind, 10 dg	GW / opgw	2226	8584	-17604	0	0	0	2,226	8,584	-17,604	-870,166	426,0011	2,226	-17,604	8,584	Wind angle: -45 dgr					
Permanent loads yg= 1.:		17045	64560	-133935	0	0	0	17,045	64,56	-133,935	-5491,34	2646,96	17,045	-133,935	64,56						
Wind angle:	380C1F2 / 3	17045	64395	-133900	0	0	0	17,045	64,395	-133,9	-4351,75	2092,838	17,045	-133,9	64,395						
	380C1F3 / 3	17045	64193	-133866	0	0	0	17,045	64,193	-133,866	-3212,78	1540,632	17,045	-133,866	64,193						
	150C1F1 / 1	4261	16140	-33484	0	0	0	4,261	16,14	-33,484	-1372,84	685,1755	4,261	-33,484	16,14						
	150C1F2 / 1	4261	16099	-33475	0	0	0	4,261	16,099	-33,475	-1087,94	546,653	4,261	-33,475	16,099						
	150C1F3 / 1	4261	16048	-33467	0	0	0	4,261	16,048	-33,467	-803,208	408,5875	4,261	-33,467	16,048						
1b	Comp. gl	4615	19208	-40847	0	0	0	4,615	19,208	-40,847	-673,976	326,5635	4,615	-40,847	19,208	1b	-20406,8	9679,733	70,725	-637,648	299,858
Wind, -20 d	GW / opgw	2225	9396	-19903	0	0	0	2,225	9,396	-19,903	-983,805	466,1375	2,225	-19,903	9,396	Wind angle: -45 dgr					
Permanent loads yg= 1.:		17036	72380	-153830	0	0	0	17,036	72,38	-153,83	-6307,03	2967,58	17,036	-153,83	72,38						
Wind angle:	380C1F2 / 3	17036	72338	-153838	0	0	0	17,036	72,338	-153,838	-4999,74	2350,985	17,036	-153,838	72,338						
	380C1F3 / 3	17036	72286	-153850	0	0	0	17,036	72,286	-153,85	-3692,4	1734,864	17,036	-153,85	72,286						
	150C1F1 / 1	4259	18095	-38458	0	0	0	4,259	18,095	-38,458	-1576,78	765,3195	4,259	-38,458	18,095						
	150C1F2 / 1	4259	18084	-38460	0	0	0	4,259	18,084	-38,46	-1249,95	611,1545	4,259	-38,46	18,084						
	150C1F3 / 1	4259	18071	-38462	0	0	0	4,259	18,071	-38,462	-923,088	457,1285	4,259	-38,462	18,071						
3	Comp. gl	7762	27716	-57669	0	0	0	7,762	27,716	-57,669	-951,539	473,5133	7,762	-57,669	27,716	3	-21914,1	10569,01	85,817	-687,895	328,451
Wind+ice, -	GW / opgw	3796	13816	-28358	0	0	0	3,796	13,816	-28,358	-1401,74	685,8136	3,796	-28,358	13,816	Wind angle: -45 dgr					
Permanent loads yg= 1.:		19802	76654	-160505	0	0	0	19,802	76,654	-160,505	-6580,71	3142,814	19,802	-160,505	76,654						
Wind angle:	380C1F2 / 3	19802	76522	-160497	0	0	0	19,802	76,522	-160,497	-5216,15	2486,965	19,802	-160,497	76,522						
0	380C1F3 / 3	19802	76360	-160493	0	0	0	19,802	76,36	-160,493	-3851,83	1832,64	19,802	-160,493	76,36						
	150C1F1 / 1	4951	19163	-40126	0	0	0	4,951	19,163	-40,126	-1645,17	812,9135	4,951	-40,126	19,163						
	150C1F2 / 1	4951	19130	-40124	0	0	0	4,951	19,13	-40,124	-1304,03	648,9555	4,951	-40,124	19,13						
	150C1F3 / 1	4951	19090	-40123	0	0	0	4,951	19,09	-40,123	-962,952	485,3905	4,951	-40,123	19,09						
4	Comp. gl	5821	20986	-44660	0	0	0	5,821	20,986	-44,66	-736,89	358,4174	5,821	-44,66	20,986	4	-20321,7	9653,065	81,591	-635,956	299,071
Constructio	GW opgw	2828	10249	-21731	0	0	0	2,828	10,249	-21,731	-1074,16	508,7602	2,828	-21,731	10,249	Wind angle: -45 dgr					
Permanent loads yg= 1.:		19451	71467	-151873	0	0	0	19,451	71,467	-151,873	-6226,79	2930,147	19,451	-151,873	71,467						
Wind angle:	380C1F2 / 3	19451	71426	-151883	0	0	0	19,451	71,426	-151,883	-4936,2	2321,345	19,451	-151,883	71,426						
	380C1F3 / 3	19451	71375	-151896	0	0	0	19,451	71,375	-151,896	-3645,5	1713	19,451	-151,896	71,375						
	150C1F1 / 1	4863	17867	-37968	0	0	0	4,863	17,867	-37,968	-1556,69	759,2935	4,863	-37,968	17,867						
	150C1F2 / 1	4863	17857	-37971	0	0	0	4,863	17,857	-37,971	-1234,06	607,099	4,863	-37,971	17,857						
	150C1F3 / 1	4863	17844	-37974	0	0	0	4,863	17,844	-37,974	-911,376	455,0025	4,863	-37,974	17,844						
1a	Comp. gl	3462	14265	-28881	0	0	0	3,462	14,265	-28,881	-476,537	242,5977	3,462	-28,881	14,265	1a	-14195,9	7089,422	53,059	-443,501	219,306
Wind, 10 dg	GW / opgw	1669	7167	-14143	0	0	0	1,669	7,167	-14,143	-699,088	355,5349	1,669	-14,143	7,167	Wind angle: 0 dgr					
Permanent loads yg= 0.!		12781	53116	-107016	0	0	0	12,781	53,116	-107,016	-4387,66	2177,756	12,781	-107,016	53,116						
Wind angle:	380C1F2 / 3	12781	52789	-106802	0	0	0	12,781	52,789	-106,802	-3471,07	1715,643	12,781	-106,802	52,789						
	380C1F3 / 3	12781	52394	-106564	0	0	0	12,781	52,394	-106,564	-2557,54	1257,456	12,781	-106,564	52,394						
	150C1F1 / 1	3195	13279	-26754	0	0	0	3,195	13,279	-26,754	-1096,91	562,0115	3,195	-26,754	13,279						
	150C1F2 / 1	3195	13197	-26700	0	0	0	3,195	13,197	-26,7	-867,75	446,475	3,195	-26,7	13,197						
	150C1F3 / 1	3195	13099	-26641	0	0	0	3,195	13,099	-26,641	-639,384	331,9485	3,195	-26,641	13,099						
1b	Comp. gl	3461	15485	-32682	0	0	0	3,461	15,485	-32,682	-539,253	262,7256	3,461	-32,682	15,485	1b	-16481,6	7872,303	53,03	-514,914	243,951
Wind, -20 d	GW / opgw	1668	7606	-15933	0	0	0	1,668	7,606	-15,933	-787,568	377,2339	1,668	-15,933	7,606	Wind angle: 0 dgr					
Permanent loads yg= 0.!		12774	58974	-124350	0	0	0	12,774	58,974	-124,35	-5098,35	2417,934	12,774	-124,35	58,974						
Wind angle:	380C1F2 / 3	12774	58902	-124346	0	0	0	12,774	58,902	-124,346	-4041,25	1914,315	12,774	-124,346	58,902						
	380C1F3 / 3	12774	58813	-124344	0	0	0	12,774	58,813	-124,344	-2984,26	1411,512	12,774	-124,344	58,813						
	150C1F1 / 1	3193	14743	-31087	0	0	0	3,193	14,743	-31,087	-1274,57	622,0245	3,193	-31,087	14,743						
	150C1F2 / 1	3193	14725	-31086	0	0	0	3,193	14,725	-31,086	-1010,3	496,124	3,193	-31,086	14,725						
	150C1F3 / 1	3193	14703	-31086	0	0	0	3,193	14,703	-31,086	-746,064	370,4335	3,193	-31,086	14,703						
3	Comp. gl	6606	25101	-51132	0	0	0	6,606	25,101	-51,132	-843,678	427,9532	6,606	-51,132	25,101	3	-18371,4	9027,986	68,114	-577,165	280,861
Wind+ice, -	GW / opgw	3239	12729	-25358	0	0	0	3,239	12,729	-25,358	-1253,45	631,6593	3,239	-25,358	12,729	Wind angle: 0 dgr					
Permanent loads yg= 0.!		15538	65071	-133622	0	0	0	15,538	65,071	-133,622	-5478,5	2667,911	15,538	-133,622	65,071						
Wind angle:	380C1F2 / 3	15538	64825	-133516	0	0	0	15,538	64,825	-133,516	-4339,27	2106,813	15,538	-133,516	64,825						
	380C1F3 / 3	15538	64529	-133402	0	0	0	15,538	64,529	-133,402	-3201,65	1548,696	15,538	-133,402	64,529						
	150C1F1 / 1	3885	16268	-33406	0	0	0	3,885	16,268	-33,406	-1369,65	688,3555	3,885	-33,406	16,268						
	150C1F2 / 1	3885	16206	-33379	0	0	0	3,885	16,206	-33,379	-1084,82	548,0625	3,885	-33,379	16,206						
	150C1F3 / 1	3885	16132	-33350	0	0	0	3,885	16,132	-33,35	-800,4	408,5355	3,885	-33,35	16,132						
4	Comp. gl	4665	17660	-37346	0	0	0	4,665	17,66	-37,346	-616,209	301,1259	4,665	-37,346	17,66	4	-16712,6	7993,022	63,885	-523,148	247,793
Constructio	GW opgw	2271	8657	-18188	0	0	0	2,271	8,657	-18,188	-899,033	429,6437	2,271	-18,188	8,657	Wind angle: 0 dgr					
Permanent loads yg= 0.!		15186	59134	-124693	0	0	0	15,186	59,134	-124,693	-5112,41	2424,494	15,186	-124,693	59,134						
Wind angle:	380C1F2 / 3	15186	59066	-124696	0	0	0	15,186	59,066	-124,696	-4052,62	1919,645	15,186	-124,696	59,066						
	380C1F3 / 3	15186	58981	-124702	0	0	0	15,186	58,981	-124,702	-2992,85	1415,544	15,186	-124,702	58,981						
	150C1F1 / 1	3797	14784	-31173	0	0	0	3,797	14,784	-31,173	-1278,09	627,0275	3,797	-31,173	14,784						
	150C1F2 / 1	3797	14766	-31174	0	0	0	3,797	14,766	-31,174	-1013,16	500,7785	3,797	-31,174	14,766						
	150C1F3 / 1	3797	14745	-31176	0	0	0	3,797	14,745	-31,176	-748,224	374,7635	3,797	-31,176	14,745						
6	Comp. gl	3462	13367	-28666	0	0	0	3,462	13,367	-28,666	-472,989	227,7807	3,462	-28,666	13,367	6	-14075,7	6624,769	53,059	-440,015	205,181
Permanent,	GW / opgw	1669	6441	-13813	0	0	0	1,669	6,441	-13,813	-682,777	319,6487	1,669	-13,813	6,441	0					
Permanent loads yg= 1.:		12781	49433	-106010	0	0	0	12,781	49,433	-106,01	-4346,41	2026,753	12,781	-106,01	49,433						
	380C1F2 / 3	12781	49433	-106010	0	0	0	12,781	49,433	-106,01	-3445,33	1606,573	12,781	-106,01	49,433						
	380C1F3 / 3	12781	49433	-106010	0	0	0	12,781	49,433	-106,01	-2544,24	1186,392	12,781	-106,01	49,433						
	150C1F1 / 1	3195	12358	-26502	0	0	0	3,195	12,358	-26,502	-1086,58	524,2505	3,195	-26,502	12,358						

	150C1F2 / 1	3195	12358	-26502	0	0	0	3,195	12,358	-26,502	-861,315	419,2075	3,195	-26,502	12,358						
	150C1F3 / 1	3195	12358	-26502	0	0	0	3,195	12,358	-26,502	-636,048	314,1645	3,195	-26,502	12,358						
1a	Comp. gl	3463	21310	-37236	0	0	0	3,463	21,31	-37,236	-614,394	358,8423	3,463	-37,236	21,31	1a	-18519,1	10717,32	53,075	-573,811	329,383
Wind, 10 dg	GW / opgw	1670	12957	-21716	0	0	0	1,67	12,957	-21,716	-1073,42	641,7354	1,67	-21,716	12,957	Wind angle: 45 dgr					
Permanent loads yg= 0.!		12785	82007	-141781	0	0	0	12,785	82,007	-141,781	-5813,02	3362,287	12,785	-141,781	82,007						
Wind angle:	380C1F2 / 3	12785	78924	-137584	0	0	0	12,785	78,924	-137,584	-4471,48	2565,03	12,785	-137,584	78,924						
	380C1F3 / 3	12784	75162	-132522	0	0	0	12,784	75,162	-132,522	-3180,53	1803,888	12,784	-132,522	75,162						
	150C1F1 / 1	3196	20502	-35445	0	0	0	3,196	20,502	-35,445	-1453,25	858,16	3,196	-35,445	20,502						
	150C1F2 / 1	3196	19731	-34396	0	0	0	3,196	19,731	-34,396	-1117,87	658,8355	3,196	-34,396	19,731						
	150C1F3 / 1	3196	18790	-33131	0	0	0	3,196	18,79	-33,131	-795,144	468,538	3,196	-33,131	18,79						
1b	Comp. gl	3461	16840	-33512	0	0	0	3,461	16,84	-33,512	-552,948	285,0831	3,461	-33,512	16,84	1b	-16928,6	8576,292	53,033	-528,164	265,289
Wind, -20 d	GW / opgw	1668	8758	-16916	0	0	0	1,668	8,758	-16,916	-836,158	434,1773	1,668	-16,916	8,758	Wind angle: 45 dgr					
Permanent loads yg= 0.!		12774	64574	-128000	0	0	0	12,774	64,574	-128	-5248	2647,534	12,774	-128	64,574						
Wind angle:	380C1F2 / 3	12774	63958	-127422	0	0	0	12,774	63,958	-127,422	-4141,22	2078,635	12,774	-127,422	63,958						
	380C1F3 / 3	12774	63221	-126766	0	0	0	12,774	63,221	-126,766	-3042,38	1517,304	12,774	-126,766	63,221						
	150C1F1 / 1	3194	16143	-32000	0	0	0	3,194	16,143	-32	-1312	679,43	3,194	-32	16,143						
	150C1F2 / 1	3194	15990	-31856	0	0	0	3,194	15,99	-31,856	-1035,32	537,242	3,194	-31,856	15,99						
	150C1F3 / 1	3194	15805	-31692	0	0	0	3,194	15,805	-31,692	-760,608	396,887	3,194	-31,692	15,805						
3	Comp. gl	6608	34473	-60583	0	0	0	6,608	34,473	-60,583	-999,62	582,5954	6,608	-60,583	34,473	3	-21386	11936,35	68,127	-667,898	369,424
Wind+ice, -	GW / opgw	3240	20451	-34266	0	0	0	3,24	20,451	-34,266	-1693,77	1013,359	3,24	-34,266	20,451	Wind angle: 45 dgr					
Permanent loads yg= 0.!		15542	86376	-155950	0	0	0	15,542	86,376	-155,95	-6393,95	3541,416	15,542	-155,95	86,376						
Wind angle:	380C1F2 / 3	15541	84029	-152992	0	0	0	15,541	84,029	-152,992	-4972,24	2730,943	15,541	-152,992	84,029						
	380C1F3 / 3	15541	81195	-149498	0	0	0	15,541	81,195	-149,498	-3587,95	1948,68	15,541	-149,498	81,195						
	150C1F1 / 1	3885	21594	-38987	0	0	0	3,885	21,594	-38,987	-1598,47	906,7215	3,885	-38,987	21,594						
	150C1F2 / 1	3885	21007	-38248	0	0	0	3,885	21,007	-38,248	-1243,06	704,095	3,885	-38,248	21,007						
	150C1F3 / 1	3885	20299	-37374	0	0	0	3,885	20,299	-37,374	-896,976	508,5435	3,885	-37,374	20,299						
4	Comp. gl	4665	18828	-37773	0	0	0	4,665	18,828	-37,773	-623,255	320,3979	4,665	-37,773	18,828	4	-17007	8626,084	63,887	-531,826	267,007
Constructio	GW opgw	2271	9615	-18753	0	0	0	2,271	9,615	-18,753	-926,961	476,9977	2,271	-18,753	9,615	Wind angle: 45 dgr					
Permanent loads yg= 0.!		15187	64197	-127187	0	0	0	15,187	64,197	-127,187	-5214,67	2632,077	15,187	-127,187	64,197						
Wind angle:	380C1F2 / 3	15187	63654	-126764	0	0	0	15,187	63,654	-126,764	-4119,83	2068,755	15,187	-126,764	63,654						
	380C1F3 / 3	15186	63001	-126289	0	0	0	15,186	63,001	-126,289	-3030,94	1512,024	15,186	-126,289	63,001						
	150C1F1 / 1	3797	16049	-31797	0	0	0	3,797	16,049	-31,797	-1303,68	678,8925	3,797	-31,797	16,049						
	150C1F2 / 1	3797	15913	-31691	0	0	0	3,797	15,913	-31,691	-1029,96	538,056	3,797	-31,691	15,913						
	150C1F3 / 1	3797	15750	-31572	0	0	0	3,797	15,75	-31,572	-757,728	398,8835	3,797	-31,572	15,75						
1a	Comp. gl	3463	20558	-36215	0	0	0	3,463	20,558	-36,215	-597,548	346,4343	3,463	-36,215	20,558	1a	-18000,2	10334,26	53,074	-558,063	317,723
Wind, 10 dg	GW / opgw	1670	12376	-20894	0	0	0	1,67	12,376	-20,894	-1032,79	613,0166	1,67	-20,894	12,376	Wind angle: 90 dgr					
Permanent loads yg= 0.!		12785	78968	-137644	0	0	0	12,785	78,968	-137,644	-5643,4	3237,688	12,785	-137,644	78,968						
Wind angle:	380C1F2 / 3	12784	76148	-133842	0	0	0	12,784	76,148	-133,842	-4349,87	2474,81	12,784	-133,842	76,148						
	380C1F3 / 3	12784	72715	-129277	0	0	0	12,784	72,715	-129,277	-3102,65	1745,16	12,784	-129,277	72,715						
	150C1F1 / 1	3196	19742	-34411	0	0	0	3,196	19,742	-34,411	-1410,85	827	3,196	-34,411	19,742						
	150C1F2 / 1	3196	19037	-33461	0	0	0	3,196	19,037	-33,461	-1087,48	636,2805	3,196	-33,461	19,037						
	150C1F3 / 1	3196	18179	-32319	0	0	0	3,196	18,179	-32,319	-775,656	453,874	3,196	-32,319	18,179						
1b	Comp. gl	3461	16694	-33380	0	0	0	3,461	16,694	-33,38	-550,77	282,6741	3,461	-33,38	16,694	1b	-16858,4	8500,251	53,033	-526,071	262,988
Wind, -20 d	GW / opgw	1668	8631	-16773	0	0	0	1,668	8,631	-16,773	-829,089	427,8997	1,668	-16,773	8,631	Wind angle: 90 dgr					
Permanent loads yg= 0.!		12774	63967	-127430	0	0	0	12,774	63,967	-127,43	-5224,63	2622,647	12,774	-127,43	63,967						
Wind angle:	380C1F2 / 3	12774	63413	-126933	0	0	0	12,774	63,413	-126,933	-4125,32	2060,923	12,774	-126,933	63,413						
	380C1F3 / 3	12774	62750	-126371	0	0	0	12,774	62,75	-126,371	-3032,9	1506	12,774	-126,371	62,75						
	150C1F1 / 1	3194	15992	-31858	0	0	0	3,194	15,992	-31,858	-1306,18	673,239	3,194	-31,858	15,992						
	150C1F2 / 1	3194	15853	-31733	0	0	0	3,194	15,853	-31,733	-1031,32	532,7895	3,194	-31,733	15,853						
	150C1F3 / 1	3194	15688	-31593	0	0	0	3,194	15,688	-31,593	-758,232	394,079	3,194	-31,593	15,688						
3	Comp. gl	6608	33469	-59363	0	0	0	6,608	33,469	-59,363	-979,49	566,0294	6,608	-59,363	33,469	3	-20994,7	11622,36	68,126	-656,027	359,84
Wind+ice, -	GW / opgw	3240	19660	-33241	0	0	0	3,24	19,66	-33,241	-1643,1	974,2594	3,24	-33,241	19,66	Wind angle: 90 dgr					
Permanent loads yg= 0.!		15541	84063	-153034	0	0	0	15,541	84,063	-153,034	-6274,39	3446,583	15,541	-153,034	84,063						
Wind angle:	380C1F2 / 3	15541	81935	-150401	0	0	0	15,541	81,935	-150,401	-4888,03	2662,888	15,541	-150,401	81,935						
	380C1F3 / 3	15541	79370	-147304	0	0	0	15,541	79,37	-147,304	-3535,3	1904,88	15,541	-147,304	79,37						
	150C1F1 / 1	3885	21016	-38258	0	0	0	3,885	21,016	-38,258	-1568,58	883,0235	3,885	-38,258	21,016						
	150C1F2 / 1	3885	20484	-37600	0	0	0	3,885	20,484	-37,6	-1222	687,0975	3,885	-37,6	20,484						
	150C1F3 / 1	3885	19843	-36826	0	0	0	3,885	19,843	-36,826	-883,824	497,5995	3,885	-36,826	19,843						
4	Comp. gl	4665	18707	-37695	0	0	0	4,665	18,707	-37,695	-621,968	318,4014	4,665	-37,695	18,707	4	-16956,9	8559,402	63,886	-530,336	264,987
Constructio	GW opgw	2271	9513	-18663	0	0	0	2,271	9,513	-18,663	-922,512	471,9558	2,271	-18,663	9,513	Wind angle: 90 dgr					
Permanent loads yg= 0.!		15187	63661	-126769	0	0	0	15,187	63,661	-126,769	-5197,53	2610,101	15,187	-126,769	63,661						
Wind angle:	380C1F2 / 3	15186	63171	-126409	0	0	0	15,186	63,171	-126,409	-4108,29	2053,058	15,186	-126,409	63,171						
	380C1F3 / 3	15186	62582	-126005	0	0	0	15,186	62,582	-126,005	-3024,12	1501,968	15,186	-126,005	62,582						
	150C1F1 / 1	3797	15915	-31692	0	0	0	3,797	15,915	-31,692	-1299,37	673,3985	3,797	-31,692	15,915						
	150C1F2 / 1	3797	15793	-31602	0	0	0	3,797	15,793	-31,602	-1027,07	534,156	3,797	-31,602	15,793						
	150C1F3 / 1	3797	15645	-31501	0	0	0	3,797	15,645	-31,501	-756,024	396,3635	3,797	-31,501	15,645						
1a	Comp. gl	3462	13901	-28691	0	0	0	3,462	13,901	-28,691	-473,402	236,5917	3,462	-28,691	13,901	1a	-14093	6900,41	53,059	-440,46	213,574
Wind, 10 dg	GW / opgw	1669	6860	-13909	0	0	0	1,669	6,86	-13,909	-687,522	340,3599	1,669	-13,909	6,86	Wind angle: -45 dgr					
Permanent loads yg= 0.!		12781	51614	-106172	0	0	0	12,781	51,614	-106,172	-4353,05	2116,174	12,781	-106,172	51,614						
Wind angle:	380C1F2 / 3	12781	51430	-106098	0	0	0	12,781	51,43	-106,098	-3448,19	1671,475	12,781	-106,098	51,43						
	380C1F3 / 3	12781	51207	-106018	0	0	0	12,781	51,207	-106,018	-2544,43	1228,968	12,781	-106,018	51,207						
	150C1F1 / 1	3195	12903	-26543	0	0	0	3,195	12,903	-26,543	-1088,26	546,5955	3,195	-26,543	12,903						
	150C1F2 / 1	3195	12857	-26524	0	0	0	3,195	12,857	-26,524	-862,03	435,425	3,195	-26,524	12,857						
	150C1F3 / 1	3195	12802	-26505	0	0	0	3,195	12,802	-26,505	-636,12	324,8205	3,195	-26,505	12,802						
1b	Comp. gl	3461	15402	-32684	0	0	0	3,461	15,402	-32,684	-539,286	261,3561	3,461	-32,684	15,402	1b	-16482,2	7829,219	53,03	-514,942	242,639
Wind, -20 d	GW / opgw	1668	7541	-15924	0	0	0	1,668	7,541	-15,924	-787,123	374,021	1,668	-15,924	7,541	Wind angle: -45 dgr					
Permanent loads yg= 0.!		12774	58633	-124351	0	0	0	12,774	58,633	-124,351	-5098,39	2403,953	12,774	-124,351	58,633						
Wind angle:	380C1F2 / 3	12774	58589	-124355	0	0	0	12,774	58,589	-124,355	-4041,54	1904,143	12,774	-124,355	58,589						
	380C1F3 / 3	12774	58535	-124361	0	0	0	12,774	58,535	-124,361	-2984,66	1404,84	12,774	-124,361	58,535						
	150C1F1 / 1	3193	14658	-31088	0	0	0	3,193	14,658	-31,088	-1274,61	618,5395	3,193	-31,088	14,658						
	150C1F2 / 1	3193	14647	-31089	0	0	0	3,193	14,647	-31,089	-1010,39	493,589	3,193	-31,089	14,647						
	150C1F3 / 1	3193	14634	-31090	0	0	0	3,193	14,634	-31,09	-746,16	368,7775	3,193	-31,09	14,634						
3	Comp. gl	6606	24590	-50966	0	0	0	6,606	24,59	-50,966	-840,939	419,5217	6,606	-50,966	24,59	3	-18317,3	8871,303	68,113	-575,589	276,081
Wind+ice, -	GW / opgw	3238	12311	-25131	0	0	0	3,238	12,311	-25,131	-1242,23	610,9968	3,238	-25,131	12,311	Wind angle: -45 dgr					
Permanent loads yg= 0.!		15538	63933	-133227	0	0	0	15,538	63,933	-133,227	-5462,31	2621,253	15,538	-133,227	63,933						
Wind angle:	380C1F2 / 3	15538	63792	-133198	0	0	0	15,538	63,792	-133,198	-4328,94	2073,24	15,538	-133,198	63,792						
0	380C1F3 / 3	15538	63619	-133169	0	0	0	15,538	63,619	-133,169	-3196,06	1526,856	15,538	-133,169	63,619						
	150C1F1 / 1	3885	15983	-33307	0	0	0	3,885	15,983	-33,307	-1365,59	676,6705	3,885	-33,307	15,983						
	150C1F2 / 1	3885	15948	-33299	0	0	0	3,885	15,948	-33,299	-1082,22	539,6775	3,885	-33,299	15,948						
	150C1F3 / 1	3885	15905	-33292	0	0	0	3,885	15,905	-33,292	-799,008	403,0875	3,885	-33,292	15,905						
4	Comp. gl	4665	17581	-37358	0	0	0	4,665	17,581	-37,358	-616,407	299,8224	4,665	-37,358	17,581	4	-16717,1	7951,814	63,885	-523,295	246,536
Constructio	GW opgw	2271	8598	-18190	0	0	0	2,271	8,598	-18,19	-899,132	426,7274	2,271	-18,19	8,598	Wind angle: -45 dgr					
Permanent loads yg= 0.!		15186	58808	-124724	0	0	0	15,186	58,808	-124,724	-5113,68	2411,128	15,186	-124,724	58,808						
Wind angle:	380C1F2 / 3	15186	58765	-124732	0	0	0	15,186	58,765	-124,732	-4053,79	1909,863	15,186	-124,732	58,765						
	380C1F3 / 3	15186	58713	-124742	0	0	0	15,186	58,713	-124,742	-2993,81	1409,112	15,186	-124,742	58,713						
	150C1F1 / 1	3797	14702	-31181	0	0	0	3,797	14,702	-31,181	-1278,42	623,6655	3,797	-31,181	14,702						
	150C1F2 / 1	3797	14691	-31183	0	0	0	3,797	14,691	-31,183	-1013,45	498,341	3,797	-31,183	14,691						
	150C1F3 / 1	3797	14678	-31185	0	0	0	3,797	14,678	-31,185	-748,44	373,1555	3,797	-31,185	14,678						
1a	Comp. gl	4617	17812	-36487	0	0	0	4,617	17,812	-36,487	-602,036	303,5337	4,617	-36,487	17,812	1a	-8080,71	13624,17	113,373	-222,204	436,229
Wind, 10 dg	GW / opgw	2226	8849	-17748	0	0	0	2,226	8,849	-17,748	-877,284	439,1001	2,226	-17,748	8,849	Wind angle: 0 dgr					
Permanent loads yg= 1.:		17045	65886	-134400	0	0	0	17,045	65,886	-134,4	-5510,4	2701,326	17,045	-134,4	65,886						
Wind angle:	380C1F2 / 3	17045	65601	-134276	17045	65601	134276	34,09	131,202	0	0	4264,065	34,09	0	131,202						
	380C1F3 / 3	17045	65254	-134141	17045	65254	134141	34,09	130,508	0	0	3132,192	34,09	0	130,508						
	150C1F1 / 1	4261	16472	-33600	4261	16472	33600	8,522	32,944	0	0	1397,575	8,522	0	32,944						
	150C1F2 / 1	4261	16400	-33569	0	0	0	4,261	16,4	-33,569	-1090,99	556,4355	4,261	-33,569	16,4						
	150C1F3 / 1	4261	16314	-33535	4261	16314	33535	8,522	32,628	0	0	829,943	8,522	0	32,628						
1b	Comp. gl	4615	19287	-40835	0	0	0	4,615	19,287	-40,835	-673,778	327,867	4,615	-40,835	19,287	1b	-9212,4	15049,65	113,315	-252,973	482,599
Wind, -20 d	GW / opgw	2225	9457	-19902	0	0	0	2,225	9,457	-19,902	-983,756	469,1527	2,225	-19,902	9,457	Wind angle: 0 dgr					
Permanent loads yg= 1.:		17036	72701	-153788	0	0	0	17,036	72,701	-153,788	-6305,31	2980,741	17,036	-153,788	72,701						
Wind angle:	380C1F2 / 3	17036	72634	-153794	17036	72634	153794	34,072	145,268	0	0	4721,21	34,072	0	145,268						
	380C1F3 / 3	17036	72551	-153803	17036	72551	153803	34,072	145,102	0	0	3482,448	34,072	0	145,102						
	150C1F1 / 1	4259	18175	-38447	4259	18175	38447	8,518	36,35	0	0	1537,199	8,518	0	36,35						
	150C1F2 / 1	4259	18158	-38448	0	0	0	4,259	18,158	-38,448	-1249,56	613,5595	4,259	-38,448	18,158						
	150C1F3 / 1	4259	18138	-38451	4259	18138	38451	8,518	36,276	0	0	917,473	8,518	0	36,276						
3	Comp. gl	7762	28198	-57773	0	0	0	7,762	28,198	-57,773	-953,255	481,4663	7,762	-57,773	28,198	3	-10256,9	16398,42	135,323	-287,153	526,271
Wind+ice, -	GW / opgw	3796	14204	-28522	0	0	0	3,796	14,204	-28,522	-1409,84	704,9925	3,796	-28,522	14,204	Wind angle: 0 dgr					
Permanent loads yg= 1.:		19802	77697	-160698	0	0	0	19,802	77,697	-160,698	-6588,62	3185,577	19,802	-160,698	77,697						
Wind angle:	380C1F2 / 3	19802	77474	-160640	19802	77474	160640	39,604	154,948	0	0	5035,81	39,604	0	154,948						
	380C1F3 / 3	19802	77203	-160581	19802	77203	160581	39,604	154,406	0	0	3705,744	39,604	0	154,406						
	150C1F1 / 1	4951	19424	-40174	4951	19424	40174	9,902	38,848	0	0	1647,229	9,902	0	38,848						
	150C1F2 / 1	4951	19368	-40160	0	0	0	4,951	19,368	-40,16	-1305,2	656,6905	4,951	-40,16	19,368						
	150C1F3 / 1	4951	19301	-40145	4951	19301	40145	9,902	38,602	0	0	980,909	9,902	0	38,602						
4	Comp. gl	5821	21063	-44642	0	0	0	5,821	21,063	-44,642	-736,593	359,6879	5,821	-44,642	21,063	4	-9268,4	14961,89	130,219	-256,137	479,49
Constructio	GW opgw	2828	10306	-21724	0	0	0	2,828	10,306	-21,724	-1073,82	511,5777	2,828	-21,724	10,306	Wind angle: 0 dgr					
Permanent loads yg= 1.:		19451	71782	-151815	0	0	0	19,451	71,782	-151,815	-6224,42	2943,062	19,451	-151,815	71,782						
Wind angle:	380C1F2 / 3	19451	71716	-151824	19451	71716	151824	38,902	143,432	0	0	4661,54	38,902	0	143,432						
	380C1F3 / 3	19451	71635	-151838	19451	71635	151838	38,902	143,27	0	0	3438,48	38,902	0	143,27						
	150C1F1 / 1	4863	17945	-37954	4863	17945	37954	9,726	35,89	0	0	1524,983	9,726	0	35,89						
	150C1F2 / 1	4863	17929	-37956	0	0	0	4,863	17,929	-37,956	-1233,57	609,439	4,863	-37,956	17,929						
	150C1F3 / 1	4863	17909	-37959	4863	17909	37959	9,726	35,818	0	0	913,125	9,726	0	35,818						
6	Comp. gl	5195	18706	-40116	0	0	0	5,195	18,706	-40,116	-661,914	319,491	5,195	-40,116	18,706	6	-8858,6	14273,58	127,555	-243,69	457,214
Permanent,	GW / opgw	2505	9033	-19371	0	0	0	2,505	9,033	-19,371	-957,509	448,4075	2,505	-19,371	9,033	0					
Permanent loads yg= 1.:		19177	68716	-147362	0	0	0	19,177	68,716	-147,362	-6041,84	2817,356	19,177	-147,362	68,716						
	380C1F2 / 3	19177	68716	-147362	19177	68716	147362	38,354	137,432	0	0	4466,54	38,354	0	137,432						
	380C1F3 / 3	19177	68716	-147362	19177	68716	147362	38,354	137,432	0	0	3298,368	38,354	0	137,432						
	150C1F1 / 1	4794	17179	-36841	4794	17179	36841	9,588	34,358	0	0	1461,412	9,588	0	34,358						
	150C1F2 / 1	4794	17179	-36841	0	0	0	4,794	17,179	-36,841	-1197,33	584,6845	4,794	-36,841	17,179						
	150C1F3 / 1	4794	17179	-36841	4794	17179	36841	9,588	34,358	0	0	877,326	9,588	0	34,358						
1a	Comp. gl	4618	23814	-42605	0	0	0	4,618	23,814	-42,605	-702,983	402,5688	4,618	-42,605	23,814	1a	-11292,4	16637,48	113,389	-318,67	527,274
Wind, 10 dg	GW / opgw	2227	13884	-23705	0	0	0	2,227	13,884	-23,705	-1171,74	687,9809	2,227	-23,705	13,884	Wind angle: 45 dgr					
Permanent loads yg= 1.:		17049	90568	-160135	0	0	0	17,049	90,568	-160,135	-6565,54	3713,288	17,049	-160,135	90,568						
Wind angle:	380C1F2 / 3	17049	87869	-156762	17045	64395	133900	34,094	152,264	-22,862	-743,015	4948,58	34,094	-22,862	152,264						
	380C1F3 / 3	17048	84603	-152765	17045	64193	133866	34,093	148,796	-18,899	-453,576	3571,104	34,093	-18,899	148,796						
	150C1F1 / 1	4262	22642	-40034	4261	16140	33484	8,523	38,782	-6,55	-268,55	1636,939	8,523	-6,55	38,782						
	150C1F2 / 1	4262	21967	-39190	0	0	0	4,262	21,967	-39,19	-1273,68	737,3685	4,262	-39,19	21,967						
	150C1F3 / 1	4262	21151	-38191	4261	16048	33467	8,523	37,199	-4,724	-113,376	939,6525	8,523	-4,724	37,199						
1b	Comp. gl	4615	20473	-41302	0	0	0	4,615	20,473	-41,302	-681,483	347,436	4,615	-41,302	20,473	1b	-9462,85	15642,71	113,315	-260,314	500,529
Wind, -20 d	GW / opgw	2225	10440	-20522	0	0	0	2,225	10,44	-20,522	-1014,4	517,7424	2,225	-20,522	10,44	Wind angle: 45 dgr					
Permanent loads yg= 1.:		17036	77573	-155875	0	0	0	17,036	77,573	-155,875	-6390,88	3180,493	17,036	-155,875	77,573						
Wind angle:	380C1F2 / 3	17036	77055	-155507	17036	72338	153838	34,072	149,393	-1,669	-54,2425	4855,273	34,072	-1,669	149,393						
	380C1F3 / 3	17036	76433	-155096	17036	72286	153850	34,072	148,719	-1,246	-29,904	3569,256	34,072	-1,246	148,719						
	150C1F1 / 1	4259	19393	-38969	4259	18095	38458	8,518	37,488	-0,511	-20,951	1583,857	8,518	-0,511	37,488						
	150C1F2 / 1	4259	19264	-38877	0	0	0	4,259	19,264	-38,877	-1263,5	649,5045	4,259	-38,877	19,264						
	150C1F3 / 1	4259	19108	-38774	4259	18071	38462	8,518	37,179	-0,312	-7,488	939,145	8,518	-0,312	37,179						
3	Comp. gl	7764	36772	-65513	0	0	0	7,764	36,772	-65,513	-1080,96	622,9415	7,764	-65,513	36,772	3	-12525,4	18887,81	135,336	-355,208	601,858
Wind+ice, -	GW / opgw	3797	21330	-36151	0	0	0	3,797	21,33	-36,151	-1786,94	1057,231	3,797	-36,151	21,33	Wind angle: 45 dgr					

Permanent loads yg= 1.		19806	96215	-177046	0	0	0	19,806	96,215	-177,046	-7258,89	3944,815	19,806	-177,046	96,215						
Wind angle:	380C1F2 / 3	19805	94170	-174735	19802	76522	160497	39,607	170,692	-14,238	-462,735	5547,49	39,607	-14,238	170,692						
	380C1F3 / 3	19805	91711	-172045	19802	76360	160493	39,607	168,071	-11,552	-277,248	4033,704	39,607	-11,552	168,071						
	150C1F1 / 1	4951	24054	-44262	4951	19163	40126	9,902	43,217	-4,136	-169,576	1826,358	9,902	-4,136	43,217						
	150C1F2 / 1	4951	23543	-43684	0	0	0	4,951	23,543	-43,684	-1419,73	792,378	4,951	-43,684	23,543						
	150C1F3 / 1	4951	22928	-43011	4951	19090	40123	9,902	42,018	-2,888	-69,312	1062,893	9,902	-2,888	42,018						
4	Comp. gl	5821	22141	-44877	0	0	0	5,821	22,141	-44,877	-740,471	377,4749	5,821	-44,877	22,141	4	-9431,76	15515,53	130,219	-260,871	496,243
Constructioi	GW opgw	2828	11174	-22095	0	0	0	2,828	11,174	-22,095	-1092,16	554,4829	2,828	-22,095	11,174	Wind angle: 45 dgr					
Permanent loads yg= 1.		19451	76354	-153254	0	0	0	19,451	76,354	-153,254	-6283,41	3130,514	19,451	-153,254	76,354						
Wind angle:	380C1F2 / 3	19451	75877	-152975	19451	71426	151883	38,902	147,303	-1,092	-35,49	4787,348	38,902	-1,092	147,303						
	380C1F3 / 3	19451	75302	-152666	19451	71375	151896	38,902	146,677	-0,77	-18,48	3520,248	38,902	-0,77	146,677						
	150C1F1 / 1	4863	19088	-38314	4863	17867	37968	9,726	36,955	-0,346	-14,186	1568,648	9,726	-0,346	36,955						
	150C1F2 / 1	4863	18969	-38244	0	0	0	4,863	18,969	-38,244	-1242,93	643,239	4,863	-38,244	18,969						
	150C1F3 / 1	4863	18826	-38167	4863	17844	37974	9,726	36,67	-0,193	-4,632	933,573	9,726	-0,193	36,67						
1a	Comp. gl	4618	23161	-41797	0	0	0	4,618	23,161	-41,797	-689,651	391,7943	4,618	-41,797	23,161	1a	-9505,33	17776,01	113,396	-260,056	566,896
Wind, 10 dg	GW / opgw	2227	13358	-23000	0	0	0	2,227	13,358	-23	-1136,89	661,9807	2,227	-23	13,358	Wind angle: 90 dgr					
Permanent loads yg= 1.		17049	87907	-156809	0	0	0	17,049	87,907	-156,809	-6429,17	3604,187	17,049	-156,809	87,907						
Wind angle:	380C1F2 / 3	17048	85456	-153799	17048	85456	153799	34,096	170,912	0	0	5554,64	34,096	0	170,912						
	380C1F3 / 3	17048	82496	-150248	17048	82496	150248	34,096	164,992	0	0	3959,808	34,096	0	164,992						
	150C1F1 / 1	4262	21977	-39202	4262	21977	39202	8,524	43,954	0	0	1848,996	8,524	0	43,954						
	150C1F2 / 1	4262	21364	-38450	0	0	0	4,262	21,364	-38,45	-1249,63	717,771	4,262	-38,45	21,364						
	150C1F3 / 1	4262	20624	-37562	4262	20624	37562	8,524	41,248	0	0	1036,834	8,524	0	41,248						
1b	Comp. gl	4615	20350	-41219	0	0	0	4,615	20,35	-41,219	-680,114	345,4065	4,615	-41,219	20,35	1b	-9326,71	15877,36	113,315	-255,956	508,698
Wind, -20 d	GW / opgw	2225	10334	-20425	0	0	0	2,225	10,334	-20,425	-1009,61	512,5028	2,225	-20,425	10,334	Wind angle: 90 dgr					
Permanent loads yg= 1.		17036	77063	-155512	0	0	0	17,036	77,063	-155,512	-6375,99	3159,583	17,036	-155,512	77,063						
Wind angle:	380C1F2 / 3	17036	76595	-155199	17036	76595	155199	34,072	153,19	0	0	4978,675	34,072	0	153,19						
	380C1F3 / 3	17036	76032	-154852	17036	76032	154852	34,072	152,064	0	0	3649,536	34,072	0	152,064						
	150C1F1 / 1	4259	19266	-38878	4259	19266	38878	8,518	38,532	0	0	1626,661	8,518	0	38,532						
	150C1F2 / 1	4259	19149	-38800	0	0	0	4,259	19,149	-38,8	-1261	645,767	4,259	-38,8	19,149						
	150C1F3 / 1	4259	19008	-38713	4259	19008	38713	8,518	38,016	0	0	959,233	8,518	0	38,016						
3	Comp. gl	7763	35850	-64466	0	0	0	7,763	35,85	-64,466	-1063,69	607,7264	7,763	-64,466	35,85	3	-11373,9	19718,85	135,338	-317,644	630,86
Wind+ice, -	GW / opgw	3797	20587	-35227	0	0	0	3,797	20,587	-35,227	-1741,27	1020,505	3,797	-35,227	20,587	Wind angle: 90 dgr					
Permanent loads yg= 1.		19805	94199	-174767	0	0	0	19,805	94,199	-174,767	-7165,45	3862,159	19,805	-174,767	94,199						
Wind angle:	380C1F2 / 3	19805	92352	-172736	19805	92352	172736	39,61	184,704	0	0	6002,88	39,61	0	184,704						
	380C1F3 / 3	19804	90133	-170380	19804	90133	170380	39,608	180,266	0	0	4326,384	39,608	0	180,266						
	150C1F1 / 1	4951	23550	-43692	4951	23550	43692	9,902	47,1	0	0	1985,561	9,902	0	47,1						
	150C1F2 / 1	4951	23088	-43184	0	0	0	4,951	23,088	-43,184	-1403,48	777,5905	4,951	-43,184	23,088						
	150C1F3 / 1	4951	22533	-42595	4951	22533	42595	9,902	45,066	0	0	1136,045	9,902	0	45,066						
4	Comp. gl	5821	22032	-44825	0	0	0	5,821	22,032	-44,825	-739,613	375,6764	5,821	-44,825	22,032	4	-9341,7	15739,56	130,219	-258,019	504,036
Constructioi	GW opgw	2828	11083	-22030	0	0	0	2,828	11,083	-22,03	-1088,94	549,9848	2,828	-22,03	11,083	Wind angle: 90 dgr					
Permanent loads yg= 1.		19451	75884	-152978	0	0	0	19,451	75,884	-152,978	-6272,1	3111,244	19,451	-152,978	75,884						
Wind angle:	380C1F2 / 3	19451	75452	-152744	19451	75452	152744	38,902	150,904	0	0	4904,38	38,902	0	150,904						
	380C1F3 / 3	19451	74931	-152486	19451	74931	152486	38,902	149,862	0	0	3596,688	38,902	0	149,862						
	150C1F1 / 1	4863	18971	-38245	4863	18971	38245	9,726	37,942	0	0	1609,115	9,726	0	37,942						
	150C1F2 / 1	4863	18863	-38186	0	0	0	4,863	18,863	-38,186	-1241,05	639,794	4,863	-38,186	18,863						
	150C1F3 / 1	4863	18733	-38122	4863	18733	38122	9,726	37,466	0	0	952,677	9,726	0	37,466						
1a	Comp. gl	4617	17489	-36384	0	0	0	4,617	17,489	-36,384	-600,336	298,2042	4,617	-36,384	17,489	1a	-6471,26	15014,09	113,382	-168,363	483,773
Wind, 10 dg	GW / opgw	2226	8584	-17604	0	0	0	2,226	8,584	-17,604	-870,166	426,0011	2,226	-17,604	8,584	Wind angle: -45 dgr					
Permanent loads yg= 1.		17045	64560	-133935	0	0	0	17,045	64,56	-133,935	-5491,34	2646,96	17,045	-133,935	64,56						
Wind angle:	380C1F2 / 3	17045	64395	-133900	17049	87869	156762	34,094	152,264	22,862	743,015	4948,58	34,094	22,862	152,264						
	380C1F3 / 3	17045	64193	-133866	17048	84603	152765	34,093	148,796	18,899	453,576	3571,104	34,093	18,899	148,796						
	150C1F1 / 1	4261	16140	-33484	4262	22642	40034	8,523	38,782	6,55	268,55	1636,939	8,523	6,55	38,782						
	150C1F2 / 1	4261	16099	-33475	0	0	0	4,261	16,099	-33,475	-1087,94	546,653	4,261	-33,475	16,099						
	150C1F3 / 1	4261	16048	-33467	4262	21151	38191	8,523	37,199	4,724	113,376	939,6525	8,523	4,724	37,199						
1b	Comp. gl	4615	19208	-40847	0	0	0	4,615	19,208	-40,847	-673,976	326,5635	4,615	-40,847	19,208	1b	-9102,18	15318,97	113,315	-249,302	491,847
Wind, -20 d	GW / opgw	2225	9396	-19903	0	0	0	2,225	9,396	-19,903	-983,805	466,1375	2,225	-19,903	9,396	Wind angle: -45 dgr					
Permanent loads yg= 1.		17036	72380	-153830	0	0	0	17,036	72,38	-153,83	-6307,03	2967,58	17,036	-153,83	72,38						
Wind angle:	380C1F2 / 3	17036	72338	-153838	17036	77055	155507	34,072	149,393	1,669	54,2425	4855,273	34,072	1,669	149,393						
	380C1F3 / 3	17036	72286	-153850	17036	76433	155096	34,072	148,719	1,246	29,904	3569,256	34,072	1,246	148,719						
	150C1F1 / 1	4259	18095	-38458	4259	19393	38969	8,518	37,488	0,511	20,951	1583,857	8,518	0,511	37,488						
	150C1F2 / 1	4259	18084	-38460	0	0	0	4,259	18,084	-38,46	-1249,95	611,1545	4,259	-38,46	18,084						
	150C1F3 / 1	4259	18071	-38462	4259	19108	38774	8,518	37,179	0,312	7,488	939,145	8,518	0,312	37,179						
3	Comp. gl	7762	27716	-57669	0	0	0	7,762	27,716	-57,669	-951,539	473,5133	7,762	-57,669	27,716	3	-9259,14	17421,54	135,329	-253,842	561,314
Wind+ice, -	GW / opgw	3796	13816	-28358	0	0	0	3,796	13,816	-28,358	-1401,74	685,8136	3,796	-28,358	13,816	Wind angle: -45 dgr					
Permanent loads yg= 1.		19802	76654	-160505	0	0	0	19,802	76,654	-160,505	-6580,71	3142,814	19,802	-160,505	76,654						
Wind angle:	380C1F2 / 3	19802	76522	-160497	19805	94170	174735	39,607	170,692	14,238	462,735	5547,49	39,607	14,238	170,692						
0	380C1F3 / 3	19802	76360	-160493	19805	91711	172045	39,607	168,071	11,552	277,248	4033,704	39,607	11,552	168,071						
	150C1F1 / 1	4951	19163	-40126	4951	24054	44262	9,902	43,217	4,136	169,576	1826,358	9,902	4,136	43,217						
	150C1F2 / 1	4951	19130	-40124	0	0	0	4,951	19,13	-40,124	-1304,03	648,9555	4,951	-40,124	19,13						
	150C1F3 / 1	4951	19090	-40123	4951	22928	43011	9,902	42,018	2,888	69,312	1062,893	9,902	2,888	42,018						
4	Comp. gl	5821	20986	-44660	0	0	0	5,821	20,986	-44,66	-736,89	358,4174	5,821	-44,66	20,986	4	-9199,12	15214,24	130,219	-253,834	488,164
Constructioi	GW opgw	2828	10249	-21731	0	0	0	2,828	10,249	-21,731	-1074,16	508,7602	2,828	-21,731	10,249	Wind angle: -45 dgr					
Permanent loads yg= 1.		19451	71467	-151873	0	0	0	19,451	71,467	-151,873	-6226,79	2930,147	19,451	-151,873	71,467						
Wind angle:	380C1F2 / 3	19451	71426	-151883	19451	75877	152975	38,902	147,303	1,092	35,49	4787,348	38,902	1,092	147,303						
	380C1F3 / 3	19451	71375	-151896	19451	75302	152666	38,902	146,677	0,77	18,48	3520,248	38,902	0,77	146,677						
	150C1F1 / 1	4863	17867	-37968	4863	19088	38314	9,726	36,955	0,346	14,186	1568,648	9,726	0,346	36,955						
	150C1F2 / 1	4863	17857	-37971	0	0	0	4,863	17,857	-37,971	-1234,06	607,099	4,863	-37,971	17,857						
	150C1F3 / 1	4863	17844	-37974	4863	18826	38167	9,726	36,67	0,193	4,632	933,573	9,726	0,193	36,67						
1a	Comp. gl	3462	14265	-28881	0	0	0	3,462	14,265	-28,881	-476,537	242,5977	3,462	-28,881	14,265	1a	-6431,03	10956,48	85,011	-176,74	350,867
Wind, 10 dg	GW / opgw	1669	7167	-14143	0	0	0	1,669	7,167	-14,143	-699,088	355,5349	1,669	-14,143	7,167	Wind angle: 0 dgr					
Permanent loads yg= 0.		12781	53116	-107016	0	0	0	12,781	53,116	-107,016	-4387,66	2177,756	12,781	-107,016	53,116						
Wind angle:	380C1F2 / 3	12781	52789	-106802	12781	52789	106802	25,562	105,578	0	0	3431,285	25,562	0	105,578						
	380C1F3 / 3	12781	52394	-106564	12781	52394	106564	25,562	104,788	0	0	2514,912	25,562	0	104,788						
	150C1F1 / 1	3195	13279	-26754	3195	13279	26754	6,39	26,558	0	0	1124,023	6,39	0	26,558						
	150C1F2 / 1	3195	13197	-26700	0	0	0	3,195	13,197	-26,7	-867,75	446,475	3,195	-26,7	13,197						
	150C1F3 / 1	3195	13099	-26641	3195	13099	26641	6,39	26,198	0	0	663,897	6,39	0	26,198						
1b	Comp. gl	3461	15485	-32682	0	0	0	3,461	15,485	-32,682	-539,253	262,7256	3,461	-32,682	15,485	1b	-7435,47	12190,59	84,964	-204,051	391,112
Wind, -20 d	GW / opgw	1668	7606	-15933	0	0	0	1,668	7,606	-15,933	-787,568	377,2339	1,668	-15,933	7,606	Wind angle: 0 dgr					
Permanent loads yg= 0.		12774	58974	-124350	0	0	0	12,774	58,974	-124,35	-5098,35	2417,934	12,774	-124,35	58,974						
Wind angle:	380C1F2 / 3	12774	58902	-124346	12774	58902	124346	25,548	117,804	0	0	3828,63	25,548	0	117,804						
	380C1F3 / 3	12774	58813	-124344	12774	58813	124344	25,548	117,626	0	0	2823,024	25,548	0	117,626						
	150C1F1 / 1	3193	14743	-31087	3193	14743	31087	6,386	29,486	0	0	1244,049	6,386	0	29,486						
	150C1F2 / 1	3193	14725	-31086	0	0	0	3,193	14,725	-31,086	-1010,3	496,124	3,193	-31,086	14,725						
	150C1F3 / 1	3193	14703	-31086	3193	14703	31086	6,386	29,406	0	0	740,867	6,386	0	29,406						
3	Comp. gl	6606	25101	-51132	0	0	0	6,606	25,101	-51,132	-843,678	427,9532	6,606	-51,132	25,101	3	-8660,44	13780,39	106,96	-243,491	442,615
Wind+ice, -	GW / opgw	3239	12729	-25358	0	0	0	3,239	12,729	-25,358	-1253,45	631,6593	3,239	-25,358	12,729	Wind angle: 0 dgr					
Permanent loads yg= 0.		15538	65071	-133622	0	0	0	15,538	65,071	-133,622	-5478,5	2667,911	15,538	-133,622	65,071						
Wind angle:	380C1F2 / 3	15538	64825	-133516	15538	64825	133516	31,076	129,65	0	0	4213,625	31,076	0	129,65						
	380C1F3 / 3	15538	64529	-133402	15538	64529	133402	31,076	129,058	0	0	3097,392	31,076	0	129,058						
	150C1F1 / 1	3885	16268	-33406	3885	16268	33406	7,77	32,536	0	0	1376,711	7,77	0	32,536						
	150C1F2 / 1	3885	16206	-33379	0	0	0	3,885	16,206	-33,379	-1084,82	548,0625	3,885	-33,379	16,206						
	150C1F3 / 1	3885	16132	-33350	3885	16132	33350	7,77	32,264	0	0	817,071	7,77	0	32,264						
4	Comp. gl	4665	17660	-37346	0	0	0	4,665	17,66	-37,346	-616,209	301,1259	4,665	-37,346	17,66	4	-7640,81	12330	101,851	-211,401	395,369
Constructioi	GW opgw	2271	8657	-18188	0	0	0	2,271	8,657	-18,188	-899,033	429,6437	2,271	-18,188	8,657	Wind angle: 0 dgr					
Permanent loads yg= 0.		15186	59134	-124693	0	0	0	15,186	59,134	-124,693	-5112,41	2424,494	15,186	-124,693	59,134						
Wind angle:	380C1F2 / 3	15186	59066	-124696	15186	59066	124696	30,372	118,132	0	0	3839,29	30,372	0	118,132						
	380C1F3 / 3	15186	58981	-124702	15186	58981	124702	30,372	117,962	0	0	2831,088	30,372	0	117,962						
	150C1F1 / 1	3797	14784	-31173	3797	14784	31173	7,594	29,568	0	0	1254,055	7,594	0	29,568						
	150C1F2 / 1	3797	14766	-31174	0	0	0	3,797	14,766	-31,174	-1013,16	500,7785	3,797	-31,174	14,766						
	150C1F3 / 1	3797	14745	-31176	3797	14745	31176	7,594	29,49	0	0	749,527	7,594	0	29,49						
6	Comp. gl	3462	13367	-28666	0	0	0	3,462	13,367	-28,666	-472,989	227,7807	3,462	-28,666	13,367	6	-6363,49	10256,15	85,011	-174,991	328,763
Permanent,	GW / opgw	1669	6441	-13813	0	0	0	1,669	6,441	-13,813	-682,777	319,6487	1,669	-13,813	6,441	0					
Permanent loads yg= 1.		12781	49433	-106010	0	0	0	12,781	49,433	-106,01	-4346,41	2026,753	12,781	-106,01	49,433						
	380C1F2 / 3	12781	49433	-106010	12781	49433	106010	25,562	98,866	0	0	3213,145	25,562	0	98,866						
	380C1F3 / 3	12781	49433	-106010	12781	49433	106010	25,562	98,866	0	0	2372,784	25,562	0	98,866						
	150C1F1 / 1	3195	12358	-26502	3195	12358	26502	6,39	24,716	0	0	1048,501	6,39	0	24,716						
	150C1F2 / 1	3195	12358	-26502	0	0	0	3,195	12,358	-26,502	-861,315	419,2075	3,195	-26,502	12,358						
	150C1F3 / 1	3195	12358	-26502	3195	12358	26502	6,39	24,716	0	0	628,329	6,39	0	24,716						
1a	Comp. gl	3463	21310	-37236	0	0	0	3,463	21,31	-37,236	-614,394	358,8423	3,463	-37,236	21,31	1a	-10802,1	14489,18	85,027	-308,647	457,725
Wind, 10 dg	GW / opgw	1670	12957	-21716	0	0	0	1,67	12,957	-21,716	-1073,42	641,7354	1,67	-21,716	12,957	Wind angle: 45 dgr					
Permanent loads yg= 0.		12785	82007	-141781	0	0	0	12,785	82,007	-141,781	-5813,02	3362,287	12,785	-141,781	82,007						
Wind angle:	380C1F2 / 3	12785	78924	-137584	12781	51430	106098	25,566	130,354	-31,486	-1023,3	4236,505	25,566	-31,486	130,354						
	380C1F3 / 3	12784	75162	-132522	12781	51207	106018	25,565	126,369	-26,504	-636,096	3032,856	25,565	-26,504	126,369						
	150C1F1 / 1	3196	20502	-35445	3195	12903	26543	6,391	33,405	-8,902	-364,982	1404,756	6,391	-8,902	33,405						
	150C1F2 / 1	3196	19731	-34396	0	0	0	3,196	19,731	-34,396	-1117,87	658,8355	3,196	-34,396	19,731						
	150C1F3 / 1	3196	18790	-33131	3195	12802	26505	6,391	31,592	-6,626	-159,024	793,3585	6,391	-6,626	31,592						
1b	Comp. gl	3461	16840	-33512	0	0	0	3,461	16,84	-33,512	-552,948	285,0831	3,461	-33,512	16,84	1b	-7881,66	12872,59	84,967	-217,27	411,705
Wind, -20 d	GW / opgw	1668	8758	-16916	0	0	0	1,668	8,758	-16,916	-836,158	434,1773	1,668	-16,916	8,758	Wind angle: 45 dgr					
Permanent loads yg= 0.		12774	64574	-128000	0	0	0	12,774	64,574	-128	-5248	2647,534	12,774	-128	64,574						
Wind angle:	380C1F2 / 3	12774	63958	-127422	12774	58589	124355	25,548	122,547	-3,067	-99,6775	3982,778	25,548	-3,067	122,547						
	380C1F3 / 3	12774	63221	-126766	12774	58535	124361	25,548	121,756	-2,405	-57,72	2922,144	25,548	-2,405	121,756						
	150C1F1 / 1	3194	16143	-32000	3193	14658	31088	6,387	30,801	-0,912	-37,392	1297,97	6,387	-0,912	30,801						
	150C1F2 / 1	3194	15990	-31856	0	0	0	3,194	15,99	-31,856	-1035,32	537,242	3,194	-31,856	15,99						
	150C1F3 / 1	3194	15805	-31692	3193	14634	31090	6,387	30,439	-0,602	-14,448	765,6645	6,387	-0,602	30,439						
3	Comp. gl	6608	34473	-60583	0	0	0	6,608	34,473	-60,583	-999,62	582,5954	6,608	-60,583	34,473	3	-11696,4	16616,21	106,973	-334,932	528,723
Wind+ice, -	GW / opgw	3240	20451	-34266	0	0	0	3,24	20,451	-34,266	-1693,77	1013,359	3,24	-34,266	20,451	Wind angle: 45 dgr					
Permanent loads yg= 0.		15542	86376	-155950	0	0	0	15,542	86,376	-155,95	-6393,95	3541,416	15,542	-155,95	86,376						
Wind angle:	380C1F2 / 3	15541	84029	-152992	15538	63792	133198	31,079	147,821	-19,794	-643,305	4804,183	31,079	-19,794	147,821						
	380C1F3 / 3	15541	81195	-149498	15538	63619	133169	31,079	144,814	-16,329	-391,896	3475,536	31,079	-16,329	144,814						
	150C1F1 / 1	3885	21594	-38987	3885	15983	33307	7,77	37,577	-5,68	-232,88	1583,392	7,77	-5,68	37,577						
	150C1F2 / 1	3885	21007	-38248	0	0	0	3,885	21,007	-38,248	-1243,06	704,095	3,885	-38,248	21,007						
	150C1F3 / 1	3885	20299	-37374	3885	15905	33292	7,77	36,204	-4,082	-97,968	911,631	7,77	-4,082	36,204						
4	Comp. gl	4665	18828	-37773	0	0	0	4,665	18,828	-37,773	-623,255	320,3979	4,665	-37,773	18,828	4	-7932,55	12941,88	101,853	-219,986	413,865
Constructioi	GW opgw	2271	9615	-18753	0	0	0	2,271	9,615	-18,753	-926,961	476,9977	2,271	-18,753	9,615	Wind angle: 45 dgr					
Permanent loads yg= 0.		15187	64197	-127187	0	0	0	15,187	64,197	-127,187	-5214,67	2632,077	15,187	-127,187	64,197						
Wind angle:	380C1F2 / 3	15187	63654	-126764	15186	58765	124732	30,373	122,419	-2,032	-66,04	3978,618	30,373	-2,032	122,419						
	380C1F3 / 3	15186	63001	-126289	15186	58713	124742	30,372	121,714	-1,547	-37,128	2921,136	30,372	-1,547	121,714						
	150C1F1 / 1	3797	16049	-31797	3797	14702	31181	7,594	30,751	-0,616	-25,256	1302,558	7,594	-0,616	30,751						
	150C1F2 / 1	3797	15913	-31691	0	0	0	3,797	15,913	-31,691	-1029,96	538,056	3,797	-31,691	15,913						
	150C1F3 / 1	3797	15750	-31572	3797	14678	31185	7,594	30,428	-0,387	-9,288	772,039	7,594	-0,387	30,428						
1a	Comp. gl	3463	20558	-36215	0	0	0	3,463	20,558	-36,215	-597,548	346,4343	3,463	-36,215	20,558	1a	-8361,22	15835,11	85,034	-228,214	504,507
Wind, 10 dg	GW / opgw	1670	12376	-20894	0	0	0	1,67	12,376	-20,894	-1032,79	613,0166	1,67	-20,894	12,376	Wind angle: 90 dgr					
Permanent loads yg= 0.		12785	78968	-137644	0	0	0	12,785	78,968	-137,644	-5643,4	3237,688	12,785	-137,644	78,968						
Wind angle:	380C1F2 / 3	12784	76148	-133842	12784	76148	133842	25,568	152,296	0	0	4949,62	25,568	0	152,296						
	380C1F3 / 3	12784	72715	-129277	12784	72715	129277	25,568	145,43	0	0	3490,32	25,568	0	145,43						
	150C1F1 / 1	3196	19742	-34411	3196	19742	34411	6,392	39,484	0	0	1654	6,392	0	39,484						

	150C1F2 /	13196	19037	-33461	0	0	0	3,196	19,037	-33,461	-1087,48	636,2805	3,196	-33,461	19,037						
	150C1F3 /	13196	18179	-32319	3196	18179	32319	6,392	36,358	0	0	907,748	6,392	0	36,358						
1b	Comp. gl	3461	16694	-33380	0	0	0	3,461	16,694	-33,38	-550,77	282,6741	3,461	-33,38	16,694	1b	-7635,81	13134,49	84,969	-209,316	420,831
Wind, -20 d	GW / opgw	1668	8631	-16773	0	0	0	1,668	8,631	-16,773	-829,089	427,8997	1,668	-16,773	8,631	Wind angle: 90 dgr					
Permanent loads yg= 0.!		12774	63967	-127430	0	0	0	12,774	63,967	-127,43	-5224,63	2622,647	12,774	-127,43	63,967						
Wind angle:	380C1F2 / 3	12774	63413	-126933	12774	63413	126933	25,548	126,826	0	0	4121,845	25,548	0	126,826						
	380C1F3 / 3	12774	62750	-126371	12774	62750	126371	25,548	125,5	0	0	3012	25,548	0	125,5						
	150C1F1 /	13194	15992	-31858	3194	15992	31858	6,388	31,984	0	0	1346,478	6,388	0	31,984						
	150C1F2 /	13194	15853	-31733	0	0	0	3,194	15,853	-31,733	-1031,32	532,7895	3,194	-31,733	15,853						
	150C1F3 /	13194	15688	-31593	3194	15688	31593	6,388	31,376	0	0	788,158	6,388	0	31,376						
3	Comp. gl	6608	33469	-59363	0	0	0	6,608	33,469	-59,363	-979,49	566,0294	6,608	-59,363	33,469	3	-10119	17570,75	106,978	-283,238	562,004
Wind+ice, -	GW / opgw	3240	19660	-33241	0	0	0	3,24	19,66	-33,241	-1643,1	974,2594	3,24	-33,241	19,66	Wind angle: 90 dgr					
Permanent loads yg= 0.!		15541	84063	-153034	0	0	0	15,541	84,063	-153,034	-6274,39	3446,583	15,541	-153,034	84,063						
Wind angle:	380C1F2 / 3	15541	81935	-150401	15541	81935	150401	31,082	163,87	0	0	5325,775	31,082	0	163,87						
	380C1F3 / 3	15541	79370	-147304	15541	79370	147304	31,082	158,74	0	0	3809,76	31,082	0	158,74						
	150C1F1 /	13885	21016	-38258	3885	21016	38258	7,77	42,032	0	0	1766,047	7,77	0	42,032						
	150C1F2 /	13885	20484	-37600	0	0	0	3,885	20,484	-37,6	-1222	687,0975	3,885	-37,6	20,484						
	150C1F3 /	13885	19843	-36826	3885	19843	36826	7,77	39,686	0	0	995,199	7,77	0	39,686						
4	Comp. gl	4665	18707	-37695	0	0	0	4,665	18,707	-37,695	-621,968	318,4014	4,665	-37,695	18,707	4	-7769,07	13184,19	101,852	-214,729	422,3
Constructio	GW opgw	2271	9513	-18663	0	0	0	2,271	9,513	-18,663	-922,512	471,9558	2,271	-18,663	9,513	Wind angle: 90 dgr					
Permanent loads yg= 0.!		15187	63661	-126769	0	0	0	15,187	63,661	-126,769	-5197,53	2610,101	15,187	-126,769	63,661						
Wind angle:	380C1F2 / 3	15186	63171	-126409	15186	63171	126409	30,372	126,342	0	0	4106,115	30,372	0	126,342						
	380C1F3 / 3	15186	62582	-126005	15186	62582	126005	30,372	125,164	0	0	3003,936	30,372	0	125,164						
	150C1F1 /	13797	15915	-31692	3797	15915	31692	7,594	31,83	0	0	1346,797	7,594	0	31,83						
	150C1F2 /	13797	15793	-31602	0	0	0	3,797	15,793	-31,602	-1027,07	534,156	3,797	-31,602	15,793						
	150C1F3 /	13797	15645	-31501	3797	15645	31501	7,594	31,29	0	0	792,727	7,594	0	31,29						
1a	Comp. gl	3462	13901	-28691	0	0	0	3,462	13,901	-28,691	-473,402	236,5917	3,462	-28,691	13,901	1a	-4192,61	12596,03	85,02	-101,778	406,952
Wind, 10 dg	GW / opgw	1669	6860	-13909	0	0	0	1,669	6,86	-13,909	-687,522	340,3599	1,669	-13,909	6,86	Wind angle: -45 dgr					
Permanent loads yg= 0.!		12781	51614	-106172	0	0	0	12,781	51,614	-106,172	-4353,05	2116,174	12,781	-106,172	51,614						
Wind angle:	380C1F2 / 3	12781	51430	-106098	12785	78924	137584	25,566	130,354	31,486	1023,295	4236,505	25,566	31,486	130,354						
	380C1F3 / 3	12781	51207	-106018	12784	75162	132522	25,565	126,369	26,504	636,096	3032,856	25,565	26,504	126,369						
	150C1F1 /	13195	12903	-26543	3196	20502	35445	6,391	33,405	8,902	364,982	1404,756	6,391	8,902	33,405						
	150C1F2 /	13195	12857	-26524	0	0	0	3,195	12,857	-26,524	-862,03	435,425	3,195	-26,524	12,857						
	150C1F3 /	13195	12802	-26505	3196	18790	33131	6,391	31,592	6,626	159,024	793,3585	6,391	6,626	31,592						
1b	Comp. gl	3461	15402	-32684	0	0	0	3,461	15,402	-32,684	-539,286	261,3561	3,461	-32,684	15,402	1b	-7225,96	12501,47	84,966	-197,062	401,766
Wind, -20 d	GW / opgw	1668	7541	-15924	0	0	0	1,668	7,541	-15,924	-787,123	374,021	1,668	-15,924	7,541	Wind angle: -45 dgr					
Permanent loads yg= 0.!		12774	58633	-124351	0	0	0	12,774	58,633	-124,351	-5098,39	2403,953	12,774	-124,351	58,633						
Wind angle:	380C1F2 / 3	12774	58589	-124355	12774	63958	127422	25,548	122,547	3,067	99,6775	3982,778	25,548	3,067	122,547						
	380C1F3 / 3	12774	58535	-124361	12774	63221	126766	25,548	121,756	2,405	57,72	2922,144	25,548	2,405	121,756						
	150C1F1 /	13193	14658	-31088	3194	16143	32000	6,387	30,801	0,912	37,392	1297,97	6,387	0,912	30,801						
	150C1F2 /	13193	14647	-31089	0	0	0	3,193	14,647	-31,089	-1010,39	493,589	3,193	-31,089	14,647						
	150C1F3 /	13193	14634	-31090	3194	15805	31692	6,387	30,439	0,602	14,448	765,6645	6,387	0,602	30,439						
3	Comp. gl	6606	24590	-50966	0	0	0	6,606	24,59	-50,966	-840,939	419,5217	6,606	-50,966	24,59	3	-7261,64	14966,19	106,965	-196,738	483,198
Wind+ice, -	GW / opgw	3238	12311	-25131	0	0	0	3,238	12,311	-25,131	-1242,23	610,9968	3,238	-25,131	12,311	Wind angle: -45 dgr					
Permanent loads yg= 0.!		15538	63933	-133227	0	0	0	15,538	63,933	-133,227	-5462,31	2621,253	15,538	-133,227	63,933						
Wind angle:	380C1F2 / 3	15538	63792	-133198	15541	84029	152992	31,079	147,821	19,794	643,305	4804,183	31,079	19,794	147,821						
0	380C1F3 / 3	15538	63619	-133169	15541	81195	149498	31,079	144,814	16,329	391,896	3475,536	31,079	16,329	144,814						
	150C1F1 /	13885	15983	-33307	3885	21594	38987	7,77	37,577	5,68	232,88	1583,392	7,77	5,68	37,577						
	150C1F2 /	13885	15948	-33299	0	0	0	3,885	15,948	-33,299	-1082,22	539,6775	3,885	-33,299	15,948						
	150C1F3 /	13885	15905	-33292	3885	20299	37374	7,77	36,204	4,082	97,968	911,631	7,77	4,082	36,204						
4	Comp. gl	4665	17581	-37358	0	0	0	4,665	17,581	-37,358	-616,407	299,8224	4,665	-37,358	17,581	4	-7504,96	12610,37	101,852	-206,873	404,99
Constructio	GW opgw	2271	8598	-18190	0	0	0	2,271	8,598	-18,19	-899,132	426,7274	2,271	-18,19	8,598	Wind angle: -45 dgr					
Permanent loads yg= 0.!		15186	58808	-124724	0	0	0	15,186	58,808	-124,724	-5113,68	2411,128	15,186	-124,724	58,808						
Wind angle:	380C1F2 / 3	15186	58765	-124732	15187	63654	126764	30,373	122,419	2,032	66,04	3978,618	30,373	2,032	122,419						
	380C1F3 / 3	15186	58713	-124742	15186	63001	126289	30,372	121,714	1,547	37,128	2921,136	30,372	1,547	121,714						
	150C1F1 /	13797	14702	-31181	3797	16049	31797	7,594	30,751	0,616	25,256	1302,558	7,594	0,616	30,751						
	150C1F2 /	13797	14691	-31183	0	0	0	3,797	14,691	-31,183	-1013,45	498,341	3,797	-31,183	14,691						
	150C1F3 /	13797	14678	-31185	3797	15750	31572	7,594	30,428	0,387	9,288	772,039	7,594	0,387	30,428						
1a	Comp. gl	4617	17812	-36487	4617	17812	36487	9,234	35,624	0	0	607,0674	9,234	0	35,624	1a	-9765,79	12812,68	98,91	-335,552	381,535
Wind, 10 dg	GW / opgw	2226	8849	-17748	2226	8849	17748	4,452	17,698	0	0	878,2001	4,452	0	17,698	Wind angle: 0 dgr					
Permanent loads yg= 1.:		17045	65886	-134400	17045	65886	134400	34,09	131,772	0	0	5402,652	34,09	0	131,772						
Wind angle:	380C1F2 / 3	17045	65601	-134276	0	0	0	17,045	65,601	-134,276	-4363,97	2132,033	17,045	-134,276	65,601						
	380C1F3 / 3	17045	65254	-134141	0	0	0	17,045	65,254	-134,141	-3219,38	1566,096	17,045	-134,141	65,254						
	150C1F1 /	14261	16472	-33600	0	0	0	4,261	16,472	-33,6	-1377,6	698,7875	4,261	-33,6	16,472						
	150C1F2 /	14261	16400	-33569	4261	16400	33569	8,522	32,8	0	0	1112,871	8,522	0	32,8						
	150C1F3 /	14261	16314	-33535	0	0	0	4,261	16,314	-33,535	-804,84	414,9715	4,261	-33,535	16,314						
1b	Comp. gl	4615	19287	-40835	4615	19287	40835	9,23	38,574	0	0	655,734	9,23	0	38,574	1b	-11188,7	14111,81	98,86	-384,495	420,704
Wind, -20 d	GW / opgw	2225	9457	-19902	2225	9457	19902	4,45	18,914	0	0	938,3055	4,45	0	18,914	Wind angle: 0 dgr					
Permanent loads yg= 1.:		17036	72701	-153788	17036	72701	153788	34,072	145,402	0	0	5961,482	34,072	0	145,402						
Wind angle:	380C1F2 / 3	17036	72634	-153794	0	0	0	17,036	72,634	-153,794	-4998,31	2360,605	17,036	-153,794	72,634						
	380C1F3 / 3	17036	72551	-153803	0	0	0	17,036	72,551	-153,803	-3691,27	1741,224	17,036	-153,803	72,551						
	150C1F1 /	14259	18175	-38447	0	0	0	4,259	18,175	-38,447	-1576,33	768,5995	4,259	-38,447	18,175						
	150C1F2 /	14259	18158	-38448	4259	18158	38448	8,518	36,316	0	0	1227,119	8,518	0	36,316						
	150C1F3 /	14259	18138	-38451	0	0	0	4,259	18,138	-38,451	-922,824	458,7365	4,259	-38,451	18,138						
3	Comp. gl	7762	28198	-57773	7762	28198	57773	15,524	56,396	0	0	962,9326	15,524	0	56,396	3	-11685,4	15742,3	122,128	-401,54	472,336
Wind+ice, -	GW / opgw	3796	14204	-28522	3796	14204	28522	7,592	28,408	0	0	1409,985	7,592	0	28,408	Wind angle: 0 dgr					
Permanent loads yg= 1.:		19802	77697	-160698	19802	77697	160698	39,604	155,394	0	0	6371,154	39,604	0	155,394						
Wind angle:	380C1F2 / 3	19802	77474	-160640	0	0	0	19,802	77,474	-160,64	-5220,8	2517,905	19,802	-160,64	77,474						
	380C1F3 / 3	19802	77203	-160581	0	0	0	19,802	77,203	-160,581	-3853,94	1852,872	19,802	-160,581	77,203						
	150C1F1 /	14951	19424	-40174	0	0	0	4,951	19,424	-40,174	-1647,13	823,6145	4,951	-40,174	19,424						
	150C1F2 /	14951	19368	-40160	4951	19368	40160	9,902	38,736	0	0	1313,381	9,902	0	38,736						
	150C1F3 /	14951	19301	-40145	0	0	0	4,951	19,301	-40,145	-963,48	490,4545	4,951	-40,145	19,301						
4	Comp. gl	5821	21063	-44642	5821	21063	44642	11,642	42,126	0	0	719,3759	11,642	0	42,126	4	-11045,5	14116,6	114,554	-379,575	421,365
Constructio	GW opgw	2828	10306	-21724	2828	10306	21724	5,656	20,612	0	0	1023,155	5,656	0	20,612	Wind angle: 0 dgr					
Permanent loads yg= 1.:		19451	71782	-151815	19451	71782	151815	38,902	143,564	0	0	5886,124	38,902	0	143,564						
Wind angle:	380C1F2 / 3	19451	71716	-151824	0	0	0	19,451	71,716	-151,824	-4934,28	2330,77	19,451	-151,824	71,716						
	380C1F3 / 3	19451	71635	-151838	0	0	0	19,451	71,635	-151,838	-3644,11	1719,24	19,451	-151,838	71,635						
	150C1F1 /	14863	17945	-37954	0	0	0	4,863	17,945	-37,954	-1556,11	762,4915	4,863	-37,954	17,945						
	150C1F2 /	14863	17929	-37956	4863	17929	37956	9,726	35,858	0	0	1218,878	9,726	0	35,858						
	150C1F3 /	14863	17909	-37959	0	0	0	4,863	17,909	-37,959	-911,016	456,5625	4,863	-37,959	17,909						
6	Comp. gl	5195	18706	-40116	5195	18706	40116	10,39	37,412	0	0	638,9819	10,39	0	37,412	6	-10720,6	13391,7	111,284	-368,406	399,058
Permanent,	GW / opgw	2505	9033	-19371	2505	9033	19371	5,01	18,066	0	0	896,815	5,01	0	18,066	0					
Permanent loads yg= 1.:		19177	68716	-147362	19177	68716	147362	38,354	137,432	0	0	5634,712	38,354	0	137,432						
	380C1F2 / 3	19177	68716	-147362	0	0	0	19,177	68,716	-147,362	-4789,27	2233,27	19,177	-147,362	68,716						
	380C1F3 / 3	19177	68716	-147362	0	0	0	19,177	68,716	-147,362	-3536,69	1649,184	19,177	-147,362	68,716						
	150C1F1 /	14794	17179	-36841	0	0	0	4,794	17,179	-36,841	-1510,48	730,706	4,794	-36,841	17,179						
	150C1F2 /	14794	17179	-36841	4794	17179	36841	9,588	34,358	0	0	1169,369	9,588	0	34,358						
	150C1F3 /	14794	17179	-36841	0	0	0	4,794	17,179	-36,841	-884,184	438,663	4,794	-36,841	17,179						
1a	Comp. gl	4618	23814	-42605	4617	17489	36384	9,235	41,303	-6,221	-102,647	700,7729	9,235	-6,221	41,303	1a	-12983,3	15828,07	98,926	-431,989	473,23
Wind, 10 dg	GW / opgw	2227	13884	-23705	2226	8584	17604	4,453	22,468	-6,101	-301,572	1113,982	4,453	-6,101	22,468	Wind angle: 45 dgr					
Permanent loads yg= 1.:		17049	90568	-160135	17045	64560	133935	34,094	155,128	-26,2	-1074,2	6360,248	34,094	-26,2	155,128						
Wind angle:	380C1F2 / 3	17049	87869	-156762	0	0	0	17,049	87,869	-156,762	-5094,77	2855,743	17,049	-156,762	87,869						
	380C1F3 / 3	17048	84603	-152765	0	0	0	17,048	84,603	-152,765	-3666,36	2030,472	17,048	-152,765	84,603						
	150C1F1 /	14262	22642	-40034	0	0	0	4,262	22,642	-40,034	-1641,39	951,763	4,262	-40,034	22,642						
	150C1F2 /	14262	21967	-39190	4261	16099	33475	8,523	38,066	-5,715	-185,738	1284,022	8,523	-5,715	38,066						
	150C1F3 /	14262	21151	-38191	0	0	0	4,262	21,151	-38,191	-916,584	531,065	4,262	-38,191	21,151						
1b	Comp. gl	4615	20473	-41302	4615	19208	40847	9,23	39,681	-0,455	-7,5075	673,9995	9,23	-0,455	39,681	1b	-11440,1	14705,84	98,86	-391,882	438,807
Wind, -20 d	GW / opgw	2225	10440	-20522	2225	9396	19903	4,45	19,836	-0,619	-30,5972	983,8799	4,45	-0,619	19,836	Wind angle: 45 dgr					
Permanent loads yg= 1.:		17036	77573	-155875	17036	72380	153830	34,072	149,953	-2,045	-83,845	6148,073	34,072	-2,045	149,953						
Wind angle:	380C1F2 / 3	17036	77055	-155507	0	0	0	17,036	77,055	-155,507	-5053,98	2504,288	17,036	-155,507	77,055						
	380C1F3 / 3	17036	76433	-155096	0	0	0	17,036	76,433	-155,096	-3722,3	1834,392	17,036	-155,096	76,433						
	150C1F1 /	14259	19393	-38969	0	0	0	4,259	19,393	-38,969	-1597,73	818,5375	4,259	-38,969	19,393						
	150C1F2 /	14259	19264	-38877	4259	18084	38460	8,518	37,348	-0,417	-13,5525	1260,659	8,518	-0,417	37,348						
	150C1F3 /	14259	19108	-38774	0	0	0	4,259	19,108	-38,774	-930,576	482,0165	4,259	-38,774	19,108						
3	Comp. gl	7764	36772	-65513	7762	27716	57669	15,526	64,488	-7,844	-129,426	1096,455	15,526	-7,844	64,488	3	-13963,5	18221	122,141	-469,791	548,039
Wind+ice, -	GW / opgw	3797	21330	-36151	3796	13816	28358	7,593	35,146	-7,793	-385,208	1743,045	7,593	-7,793	35,146	Wind angle: 45 dgr					
Permanent loads yg= 1.:		19806	96215	-177046	19802	76654	160505	39,608	172,869	-16,541	-678,181	7087,629	39,608	-16,541	172,869						
Wind angle:	380C1F2 / 3	19805	94170	-174735	0	0	0	19,805	94,17	-174,735	-5678,89	3060,525	19,805	-174,735	94,17						
	380C1F3 / 3	19805	91711	-172045	0	0	0	19,805	91,711	-172,045	-4129,08	2201,064	19,805	-172,045	91,711						
	150C1F1 /	14951	24054	-44262	0	0	0	4,951	24,054	-44,262	-1814,74	1013,445	4,951	-44,262	24,054						
	150C1F2 /	14951	23543	-43684	4951	19130	40124	9,902	42,673	-3,56	-115,7	1441,334	9,902	-3,56	42,673						
	150C1F3 /	14951	22928	-43011	0	0	0	4,951	22,928	-43,011	-1032,26	577,5025	4,951	-43,011	22,928						
4	Comp. gl	5821	22141	-44877	5821	20986	44660	11,642	43,127	-0,217	-3,5805	735,8924	11,642	-0,217	43,127	4	-11209,6	14671,31	114,554	-384,357	438,29
Constructio	GW opgw	2828	11174	-22095	2828	10249	21731	5,656	21,423	-0,364	-17,9925	1063,243	5,656	-0,364	21,423	Wind angle: 45 dgr					
Permanent loads yg= 1.:		19451	76354	-153254	19451	71467	151873	38,902	147,821	-1,381	-56,621	6060,661	38,902	-1,381	147,821						
Wind angle:	380C1F2 / 3	19451	75877	-152975	0	0	0	19,451	75,877	-152,975	-4971,69	2466,003	19,451	-152,975	75,877						
	380C1F3 / 3	19451	75302	-152666	0	0	0	19,451	75,302	-152,666	-3663,98	1807,248	19,451	-152,666	75,302						
	150C1F1 /	14863	19088	-38314	0	0	0	4,863	19,088	-38,314	-1570,87	809,3545	4,863	-38,314	19,088						
	150C1F2 /	14863	18969	-38244	4863	17857	37971	9,726	36,826	-0,273	-8,8725	1250,338	9,726	-0,273	36,826						
	150C1F3 /	14863	18826	-38167	0	0	0	4,863	18,826	-38,167	-916,008	478,5705	4,863	-38,167	18,826						
1a	Comp. gl	4618	23161	-41797	4618	23161	41797	9,236	46,322	0	0	783,5885	9,236	0	46,322	1a	-11113,2	16951,6	98,932	-380,811	502,133
Wind, 10 dg	GW / opgw	2227	13358	-23000	2227	13358	23000	4,454	26,716	0	0	1323,961	4,454	0	26,716	Wind angle: 90 dgr					
Permanent loads yg= 1.:		17049	87907	-156809	17049	87907	156809	34,098	175,814	0	0	7208,374	34,098	0	175,814						
Wind angle:	380C1F2 / 3	17048	85456	-153799	0	0	0	17,048	85,456	-153,799	-4998,47	2777,32	17,048	-153,799	85,456						
	380C1F3 / 3	17048	82496	-150248	0	0	0	17,048	82,496	-150,248	-3605,95	1979,904	17,048	-150,248	82,496						
	150C1F1 /	14262	21977	-39202	0	0	0	4,262	21,977	-39,202	-1607,28	924,498	4,262	-39,202	21,977						
	150C1F2 /	14262	21364	-38450	4262	21364	38450	8,524	42,728	0	0	1435,542	8,524	0	42,728						
	150C1F3 /	14262	20624	-37562	0	0	0	4,262	20,624	-37,562	-901,488	518,417	4,262	-37,562	20,624						
1b	Comp. gl	4615	20350	-41219	4615	20350	41219	9,23	40,7	0	0	690,813	9,23	0	40,7	1b	-11283,5	14933,57	98,86	-387,642	444,693
Wind, -20 d	GW / opgw	2225	10334	-20425	2225	10334	20425	4,45	20,668	0	0	1025,006	4,45	0	20,668	Wind angle: 90 dgr					
Permanent loads yg= 1.:		17036	77063	-155512	17036	77063	155512	34,072	154,126	0	0	6319,166	34,072	0	154,126						
Wind angle:	380C1F2 / 3	17036	76595	-155199	0	0	0	17,036	76,595	-155,199	-5043,97	2489,338	17,036	-155,199	76,595						
	380C1F3 / 3	17036	76032	-154852	0	0	0	17,036	76,032	-154,852	-3716,45	1824,768	17,036	-154,852	76,032						
	150C1F1 /	14259	19266	-38878	0	0	0	4,259	19,266	-38,878	-1594	813,3305	4,259	-38,878	19,266						
	150C1F2 /	14259	19149	-38800	4259	19149	38800	8,518	38,298	0	0	1291,534	8,518	0	38,298						
	150C1F3 /	14259	19008	-38713	0	0	0	4,259	19,008	-38,713	-929,112	479,6165	4,259	-38,713	19,008						
3	Comp. gl	7763	35850	-64466	7763	35850	64466	15,526	71,7	0	0	1215,453	15,526	0	71,7	3	-12516,7	19261,4	122,143	-429,403	576,016
Wind+ice, -	GW / opgw	3797	20587	-35227	3797	20587	35227	7,594	41,174	0	0	2041,01	7,594	0	41,174	Wind angle: 90 dgr					
Permanent loads yg= 1.:		19805	94199	-174767	19805	94199	174767	39,61	188,398	0	0	7724,318	39,61	0	188,398						
Wind angle:	380C1F2 / 3	19805	92352	-172736	0	0	0	19,805	92,352	-172,736	-5613,92	3001,44	19,805	-172,736	92,352						
	380C1F3 / 3	19804	90133	-170380	0	0	0	19,804	90,133	-170,38	-4089,12	2163,192	19,804	-170,38	90,133						
	150C1F1 /	14951	23550	-43692	0	0	0	4,951	23,55	-43,692	-1791,37	992,7805	4,951	-43,692	23,55						
	150C1F2 /	14951	23088	-43184	4951	23088	43184	9,902	46,176	0	0	1555,181	9,902	0	46,176						
	150C1F3 /	14951	22533	-42595	0	0	0	4,951	22,533	-42,595	-1022,28	568,0225	4,951	-42,595	22,533						
4	Comp. gl	5821	22032	-44825	5821	22032	44825	11,642	44,064	0	0	751,3529	11,642	0	44,064	4	-11106,8	14884,83	114,554	-381,597	443,811
Constructio	GW opgw	2828	11083	-22030	2828	11083	22030	5,656	22,166	0	0	1099,97	5,656	0	22,166	Wind angle: 90 dgr					

Permanent loads yg= 1.:		19451	75884	-152978	19451	75884	152978	38,902	151,768	0	0	6222,488	38,902	0	151,768						
Wind angle:	380C1F2 / 3	19451	75452	-152744	0	0	0	19,451	75,452	-152,744	-4964,18	2452,19	19,451	-152,744	75,452						
	380C1F3 / 3	19451	74931	-152486	0	0	0	19,451	74,931	-152,486	-3659,66	1798,344	19,451	-152,486	74,931						
	150C1F1 / 1	4863	18971	-38245	0	0	0	4,863	18,971	-38,245	-1568,05	804,5575	4,863	-38,245	18,971						
	150C1F2 / 1	4863	18863	-38186	4863	18863	38186	9,726	37,726	0	0	1279,588	9,726	0	37,726						
	150C1F3 / 1	4863	18733	-38122	0	0	0	4,863	18,733	-38,122	-914,928	476,3385	4,863	-38,122	18,733						
1a	Comp. gl	4617	17489	-36384	4618	23814	42605	9,235	41,303	6,221	102,6465	700,7729	9,235	6,221	41,303	1a	-8076,43	14186,26	98,917	-290,48	417,741
Wind, 10 dg	GW / opgw	2226	8584	-17604	2227	13884	23705	4,453	22,468	6,101	301,5724	1113,982	4,453	6,101	22,468	Wind angle: -45 dgr					
Permanent loads yg= 1.:		17045	64560	-133935	17049	90568	160135	34,094	155,128	26,2	1074,2	6360,248	34,094	26,2	155,128						
Wind angle:	380C1F2 / 3	17045	64395	-133900	0	0	0	17,045	64,395	-133,9	-4351,75	2092,838	17,045	-133,9	64,395						
	380C1F3 / 3	17045	64193	-133866	0	0	0	17,045	64,193	-133,866	-3212,78	1540,632	17,045	-133,866	64,193						
	150C1F1 / 1	4261	16140	-33484	0	0	0	4,261	16,14	-33,484	-1372,84	685,1755	4,261	-33,484	16,14						
	150C1F2 / 1	4261	16099	-33475	4262	21967	39190	8,523	38,066	5,715	185,7375	1284,022	8,523	5,715	38,066						
	150C1F3 / 1	4261	16048	-33467	0	0	0	4,261	16,048	-33,467	-803,208	408,5875	4,261	-33,467	16,048						
1b	Comp. gl	4615	19208	-40847	4615	20473	41302	9,23	39,681	0,455	7,5075	673,9995	9,23	0,455	39,681	1b	-11056,5	14374,91	98,86	-381,072	427,608
Wind, -20 d	GW / opgw	2225	9396	-19903	2225	10440	20522	4,45	19,836	0,619	30,59717	983,8799	4,45	0,619	19,836	Wind angle: -45 dgr					
Permanent loads yg= 1.:		17036	72380	-153830	17036	77573	155875	34,072	149,953	2,045	83,845	6148,073	34,072	2,045	149,953						
Wind angle:	380C1F2 / 3	17036	72338	-153838	0	0	0	17,036	72,338	-153,838	-4999,74	2350,985	17,036	-153,838	72,338						
	380C1F3 / 3	17036	72286	-153850	0	0	0	17,036	72,286	-153,85	-3692,4	1734,864	17,036	-153,85	72,286						
	150C1F1 / 1	4259	18095	-38458	0	0	0	4,259	18,095	-38,458	-1576,78	765,3195	4,259	-38,458	18,095						
	150C1F2 / 1	4259	18084	-38460	4259	19264	38877	8,518	37,348	0,417	13,5525	1260,659	8,518	0,417	37,348						
	150C1F3 / 1	4259	18071	-38462	0	0	0	4,259	18,071	-38,462	-923,088	457,1285	4,259	-38,462	18,071						
3	Comp. gl	7762	27716	-57669	7764	36772	65513	15,526	64,488	7,844	129,426	1096,455	15,526	7,844	64,488	3	-10367,6	16986,37	122,135	-365,501	506,311
Wind+ice, -	GW / opgw	3796	13816	-28358	3797	21330	36151	7,593	35,146	7,793	385,208	1743,045	7,593	7,793	35,146	Wind angle: -45 dgr					
Permanent loads yg= 1.:		19802	76654	-160505	19806	96215	177046	39,608	172,869	16,541	678,181	7087,629	39,608	16,541	172,869						
Wind angle:	380C1F2 / 3	19802	76522	-160497	0	0	0	19,802	76,522	-160,497	-5216,15	2486,965	19,802	-160,497	76,522						
	380C1F3 / 3	19802	76360	-160493	0	0	0	19,802	76,36	-160,493	-3851,83	1832,64	19,802	-160,493	76,36						
	150C1F1 / 1	4951	19163	-40126	0	0	0	4,951	19,163	-40,126	-1645,17	812,9135	4,951	-40,126	19,163						
	150C1F2 / 1	4951	19130	-40124	4951	23543	43684	9,902	42,673	3,56	115,7	1441,334	9,902	3,56	42,673						
	150C1F3 / 1	4951	19090	-40123	0	0	0	4,951	19,09	-40,123	-962,952	485,3905	4,951	-40,123	19,09						
4	Comp. gl	5821	20986	-44660	5821	22141	44877	11,642	43,127	0,217	3,5805	735,8924	11,642	0,217	43,127	4	-10962,7	14358,78	114,554	-377,486	427,709
Constructio	GW opgw	2828	10249	-21731	2828	11174	22095	5,656	21,423	0,364	17,99252	1063,243	5,656	0,364	21,423	Wind angle: -45 dgr					
Permanent loads yg= 1.:		19451	71467	-151873	19451	76354	153254	38,902	147,821	1,381	56,621	6060,661	38,902	1,381	147,821						
Wind angle:	380C1F2 / 3	19451	71426	-151883	0	0	0	19,451	71,426	-151,883	-4936,2	2321,345	19,451	-151,883	71,426						
	380C1F3 / 3	19451	71375	-151896	0	0	0	19,451	71,375	-151,896	-3645,5	1713	19,451	-151,896	71,375						
	150C1F1 / 1	4863	17867	-37968	0	0	0	4,863	17,867	-37,968	-1556,69	759,2935	4,863	-37,968	17,867						
	150C1F2 / 1	4863	17857	-37971	4863	18969	38244	9,726	36,826	0,273	8,8725	1250,338	9,726	0,273	36,826						
	150C1F3 / 1	4863	17844	-37974	0	0	0	4,863	17,844	-37,974	-911,376	455,0025	4,863	-37,974	17,844						
1a	Comp. gl	3462	14265	-28881	3462	14265	28881	6,924	28,53	0	0	485,1954	6,924	0	28,53	1a	-7764,9	10311,79	74,166	-266,761	307,051
Wind, 10 dg	GW / opgw	1669	7167	-14143	1669	7167	14143	3,338	14,334	0	0	711,0698	3,338	0	14,334	Wind angle: 0 dgr					
Permanent loads yg= 0.!		12781	53116	-107016	12781	53116	107016	25,562	106,232	0	0	4355,512	25,562	0	106,232						
Wind angle:	380C1F2 / 3	12781	52789	-106802	0	0	0	12,781	52,789	-106,802	-3471,07	1715,643	12,781	-106,802	52,789						
	380C1F3 / 3	12781	52394	-106564	0	0	0	12,781	52,394	-106,564	-2557,54	1257,456	12,781	-106,564	52,394						
	150C1F1 / 1	3195	13279	-26754	0	0	0	3,195	13,279	-26,754	-1096,91	562,0115	3,195	-26,754	13,279						
	150C1F2 / 1	3195	13197	-26700	3195	13197	26700	6,39	26,394	0	0	892,95	6,39	0	26,394						
	150C1F3 / 1	3195	13099	-26641	0	0	0	3,195	13,099	-26,641	-639,384	331,9485	3,195	-26,641	13,099						
1b	Comp. gl	3461	15485	-32682	3461	15485	32682	6,922	30,97	0	0	525,4512	6,922	0	30,97	1b	-9046,13	11426,32	74,126	-310,863	340,741
Wind, -20 d	GW / opgw	1668	7606	-15933	1668	7606	15933	3,336	15,212	0	0	754,4679	3,336	0	15,212	Wind angle: 0 dgr					
Permanent loads yg= 0.!		12774	58974	-124350	12774	58974	124350	25,548	117,948	0	0	4835,868	25,548	0	117,948						
Wind angle:	380C1F2 / 3	12774	58902	-124346	0	0	0	12,774	58,902	-124,346	-4041,25	1914,315	12,774	-124,346	58,902						
	380C1F3 / 3	12774	58813	-124344	0	0	0	12,774	58,813	-124,344	-2984,26	1411,512	12,774	-124,344	58,813						
	150C1F1 / 1	3193	14743	-31087	0	0	0	3,193	14,743	-31,087	-1274,57	622,0245	3,193	-31,087	14,743						
	150C1F2 / 1	3193	14725	-31086	3193	14725	31086	6,386	29,45	0	0	992,248	6,386	0	29,45						
	150C1F3 / 1	3193	14703	-31086	0	0	0	3,193	14,703	-31,086	-746,064	370,4335	3,193	-31,086	14,703						
3	Comp. gl	6606	25101	-51132	6606	25101	51132	13,212	50,202	0	0	855,9064	13,212	0	50,202	3	-9710,96	13303,57	97,382	-333,674	399,968
Wind+ice, -	GW / opgw	3239	12729	-25358	3239	12729	25358	6,478	25,458	0	0	1263,319	6,478	0	25,458	Wind angle: 0 dgr					
Permanent loads yg= 0.!		15538	65071	-133622	15538	65071	133622	31,076	130,142	0	0	5335,822	31,076	0	130,142						
Wind angle:	380C1F2 / 3	15538	64825	-133516	0	0	0	15,538	64,825	-133,516	-4339,27	2106,813	15,538	-133,516	64,825						
	380C1F3 / 3	15538	64529	-133402	0	0	0	15,538	64,529	-133,402	-3201,65	1548,696	15,538	-133,402	64,529						
	150C1F1 / 1	3885	16268	-33406	0	0	0	3,885	16,268	-33,406	-1369,65	688,3555	3,885	-33,406	16,268						
	150C1F2 / 1	3885	16206	-33379	3885	16206	33379	7,77	32,412	0	0	1096,125	7,77	0	32,412						
	150C1F3 / 1	3885	16132	-33350	0	0	0	3,885	16,132	-33,35	-800,4	408,5355	3,885	-33,35	16,132						
4	Comp. gl	4665	17660	-37346	4665	17660	37346	9,33	35,32	0	0	602,2517	9,33	0	35,32	4	-9071,79	11649,06	89,804	-311,747	348,01
Constructio	GW opgw	2271	8657	-18188	2271	8657	18188	4,542	17,314	0	0	859,2875	4,542	0	17,314	Wind angle: 0 dgr					
Permanent loads yg= 0.!		15186	59134	-124693	15186	59134	124693	30,372	118,268	0	0	4848,988	30,372	0	118,268						
Wind angle:	380C1F2 / 3	15186	59066	-124696	0	0	0	15,186	59,066	-124,696	-4052,62	1919,645	15,186	-124,696	59,066						
	380C1F3 / 3	15186	58981	-124702	0	0	0	15,186	58,981	-124,702	-2992,85	1415,544	15,186	-124,702	58,981						
	150C1F1 / 1	3797	14784	-31173	0	0	0	3,797	14,784	-31,173	-1278,09	627,0275	3,797	-31,173	14,784						
	150C1F2 / 1	3797	14766	-31174	3797	14766	31174	7,594	29,532	0	0	1001,557	7,594	0	29,532						
	150C1F3 / 1	3797	14745	-31176	0	0	0	3,797	14,745	-31,176	-748,224	374,7635	3,797	-31,176	14,745						
6	Comp. gl	3462	13367	-28666	3462	13367	28666	6,924	26,734	0	0	455,5614	6,924	0	26,734	6	-7712,2	9618,159	74,166	-265,024	286,78
Permanent,	GW / opgw	1669	6441	-13813	1669	6441	13813	3,338	12,882	0	0	639,2975	3,338	0	12,882	0					
Permanent loads yg= 1.:		12781	49433	-106010	12781	49433	106010	25,562	98,866	0	0	4053,506	25,562	0	98,866						
	380C1F2 / 3	12781	49433	-106010	0	0	0	12,781	49,433	-106,01	-3445,33	1606,573	12,781	-106,01	49,433						
	380C1F3 / 3	12781	49433	-106010	0	0	0	12,781	49,433	-106,01	-2544,24	1186,392	12,781	-106,01	49,433						
	150C1F1 / 1	3195	12358	-26502	0	0	0	3,195	12,358	-26,502	-1086,58	524,2505	3,195	-26,502	12,358						
	150C1F2 / 1	3195	12358	-26502	3195	12358	26502	6,39	24,716	0	0	838,415	6,39	0	24,716						
	150C1F3 / 1	3195	12358	-26502	0	0	0	3,195	12,358	-26,502	-636,048	314,1645	3,195	-26,502	12,358						
1a	Comp. gl	3463	21310	-37236	3462	13901	28691	6,925	35,211	-8,545	-140,993	595,434	6,925	-8,545	35,211	1a	-12143,1	13845,87	74,182	-398,515	414,615
Wind, 10 dg	GW / opgw	1670	12957	-21716	1669	6860	13909	3,339	19,817	-7,807	-385,9	982,0953	3,339	-7,807	19,817	Wind angle: 45 dgr					
Permanent loads yg= 0.!		12785	82007	-141781	12781	51614	106172	25,566	133,621	-35,609	-1459,97	5478,461	25,566	-35,609	133,621						
Wind angle:	380C1F2 / 3	12785	78924	-137584	0	0	0	12,785	78,924	-137,584	-4471,48	2565,03	12,785	-137,584	78,924						
	380C1F3 / 3	12784	75162	-132522	0	0	0	12,784	75,162	-132,522	-3180,53	1803,888	12,784	-132,522	75,162						
	150C1F1 / 1	3196	20502	-35445	0	0	0	3,196	20,502	-35,445	-1453,25	858,16	3,196	-35,445	20,502						
	150C1F2 / 1	3196	19731	-34396	3195	12857	26524	6,391	32,588	-7,872	-255,84	1094,261	6,391	-7,872	32,588						
	150C1F3 / 1	3196	18790	-33131	0	0	0	3,196	18,79	-33,131	-795,144	468,538	3,196	-33,131	18,79						
1b	Comp. gl	3461	16840	-33512	3461	15402	32684	6,922	32,242	-0,828	-13,662	546,4392	6,922	-0,828	32,242	1b	-9493,44	12109,21	74,129	-324,116	361,512
Wind, -20 d	GW / opgw	1668	8758	-16916	1668	7541	15924	3,336	16,299	-0,992	-49,0346	808,1983	3,336	-0,992	16,299	Wind angle: 45 dgr					
Permanent loads yg= 0.!		12774	64574	-128000	12774	58633	124351	25,548	123,207	-3,649	-149,609	5051,487	25,548	-3,649	123,207						
Wind angle:	380C1F2 / 3	12774	63958	-127422	0	0	0	12,774	63,958	-127,422	-4141,22	2078,635	12,774	-127,422	63,958						
	380C1F3 / 3	12774	63221	-126766	0	0	0	12,774	63,221	-126,766	-3042,38	1517,304	12,774	-126,766	63,221						
	150C1F1 / 1	3194	16143	-32000	0	0	0	3,194	16,143	-32	-1312	679,43	3,194	-32	16,143						
	150C1F2 / 1	3194	15990	-31856	3193	14647	31089	6,387	30,637	-0,767	-24,9275	1030,831	6,387	-0,767	30,637						
	150C1F3 / 1	3194	15805	-31692	0	0	0	3,194	15,805	-31,692	-760,608	396,887	3,194	-31,692	15,805						
3	Comp. gl	6608	34473	-60583	6606	24590	50966	13,214	59,063	-9,617	-158,681	1002,117	13,214	-9,617	59,063	3	-12758,3	16127,8	97,394	-425,275	486,206
Wind+ice, -	GW / opgw	3240	20451	-34266	3238	12311	25131	6,478	32,762	-9,135	-451,543	1624,355	6,478	-9,135	32,762	Wind angle: 45 dgr					
Permanent loads yg= 0.!		15542	86376	-155950	15538	63933	133227	31,08	150,309	-22,723	-931,643	6162,669	31,08	-22,723	150,309						
Wind angle:	380C1F2 / 3	15541	84029	-152992	0	0	0	15,541	84,029	-152,992	-4972,24	2730,943	15,541	-152,992	84,029						
	380C1F3 / 3	15541	81195	-149498	0	0	0	15,541	81,195	-149,498	-3587,95	1948,68	15,541	-149,498	81,195						
	150C1F1 / 1	3885	21594	-38987	0	0	0	3,885	21,594	-38,987	-1598,47	906,7215	3,885	-38,987	21,594						
	150C1F2 / 1	3885	21007	-38248	3885	15948	33299	7,77	36,955	-4,949	-160,843	1243,773	7,77	-4,949	36,955						
	150C1F3 / 1	3885	20299	-37374	0	0	0	3,885	20,299	-37,374	-896,976	508,5435	3,885	-37,374	20,299						
4	Comp. gl	4665	18828	-37773	4665	17581	37358	9,33	36,409	-0,415	-6,8475	620,2202	9,33	-0,415	36,409	4	-9364,34	12262,1	89,806	-320,371	366,685
Constructio	GW opgw	2271	9615	-18753	2271	8598	18190	4,542	18,213	-0,563	-27,8291	903,7251	4,542	-0,563	18,213	Wind angle: 45 dgr					
Permanent loads yg= 0.!		15187	64197	-127187	15186	58808	124724	30,373	123,005	-2,463	-100,983	5043,205	30,373	-2,463	123,005						
Wind angle:	380C1F2 / 3	15187	63654	-126764	0	0	0	15,187	63,654	-126,764	-4119,83	2068,755	15,187	-126,764	63,654						
	380C1F3 / 3	15186	63001	-126289	0	0	0	15,186	63,001	-126,289	-3030,94	1512,024	15,186	-126,289	63,001						
	150C1F1 / 1	3797	16049	-31797	0	0	0	3,797	16,049	-31,797	-1303,68	678,8925	3,797	-31,797	16,049						
	150C1F2 / 1	3797	15913	-31691	3797	14691	31183	7,594	30,604	-0,508	-16,51	1036,397	7,594	-0,508	30,604						
	150C1F3 / 1	3797	15750	-31572	0	0	0	3,797	15,75	-31,572	-757,728	398,8835	3,797	-31,572	15,75						
1a	Comp. gl	3463	20558	-36215	3463	20558	36215	6,926	41,116	0	0	692,8686	6,926	0	41,116	1a	-9639,02	15167,68	74,188	-329,849	448,662
Wind, 10 dg	GW / opgw	1670	12376	-20894	1670	12376	20894	3,34	24,752	0	0	1226,033	3,34	0	24,752	Wind angle: 90 dgr					
Permanent loads yg= 0.!		12785	78968	-137644	12785	78968	137644	25,57	157,936	0	0	6475,376	25,57	0	157,936						
Wind angle:	380C1F2 / 3	12784	76148	-133842	0	0	0	12,784	76,148	-133,842	-4349,87	2474,81	12,784	-133,842	76,148						
	380C1F3 / 3	12784	72715	-129277	0	0	0	12,784	72,715	-129,277	-3102,65	1745,16	12,784	-129,277	72,715						
	150C1F1 / 1	3196	19742	-34411	0	0	0	3,196	19,742	-34,411	-1410,85	827	3,196	-34,411	19,742						
	150C1F2 / 1	3196	19037	-33461	3196	19037	33461	6,392	38,074	0	0	1272,561	6,392	0	38,074						
	150C1F3 / 1	3196	18179	-32319	0	0	0	3,196	18,179	-32,319	-775,656	453,874	3,196	-32,319	18,179						
1b	Comp. gl	3461	16694	-33380	3461	16694	33380	6,922	33,388	0	0	565,3482	6,922	0	33,388	1b	-9222,64	12366,26	74,13	-316,755	368,133
Wind, -20 d	GW / opgw	1668	8631	-16773	1668	8631	16773	3,336	17,262	0	0	855,7994	3,336	0	17,262	Wind angle: 90 dgr					
Permanent loads yg= 0.!		12774	63967	-127430	12774	63967	127430	25,548	127,934	0	0	5245,294	25,548	0	127,934						
Wind angle:	380C1F2 / 3	12774	63413	-126933	0	0	0	12,774	63,413	-126,933	-4125,32	2060,923	12,774	-126,933	63,413						
	380C1F3 / 3	12774	62750	-126371	0	0	0	12,774	62,75	-126,371	-3032,9	1506	12,774	-126,371	62,75						
	150C1F1 / 1	3194	15992	-31858	0	0	0	3,194	15,992	-31,858	-1306,18	673,239	3,194	-31,858	15,992						
	150C1F2 / 1	3194	15853	-31733	3194	15853	31733	6,388	31,706	0	0	1065,579	6,388	0	31,706						
	150C1F3 / 1	3194	15688	-31593	0	0	0	3,194	15,688	-31,593	-758,232	394,079	3,194	-31,593	15,688						
3	Comp. gl	6608	33469	-59363	6608	33469	59363	13,216	66,938	0	0	1132,059	13,216	0	66,938	3	-10875,7	17296,33	97,4	-372,789	517,516
Wind+ice, -	GW / opgw	3240	19660	-33241	3240	19660	33241	6,48	39,32	0	0	1948,519	6,48	0	39,32	Wind angle: 90 dgr					
Permanent loads yg= 0.!		15541	84063	-153034	15541	84063	153034	31,082	168,126	0	0	6893,166	31,082	0	168,126						
Wind angle:	380C1F2 / 3	15541	81935	-150401	0	0	0	15,541	81,935	-150,401	-4888,03	2662,888	15,541	-150,401	81,935						
	380C1F3 / 3	15541	79370	-147304	0	0	0	15,541	79,37	-147,304	-3535,3	1904,88	15,541	-147,304	79,37						
	150C1F1 / 1	3885	21016	-38258	0	0	0	3,885	21,016	-38,258	-1568,58	883,0235	3,885	-38,258	21,016						
	150C1F2 / 1	3885	20484	-37600	3885	20484	37600	7,77	40,968	0	0	1374,195	7,77	0	40,968						
	150C1F3 / 1	3885	19843	-36826	0	0	0	3,885	19,843	-36,826	-883,824	497,5995	3,885	-36,826	19,843						
4	Comp. gl	4665	18707	-37695	4665	18707	37695	9,33	37,414	0	0	636,8027	9,33	0	37,414	4	-9187,81	12494,02	89,806	-315,607	372,661
Constructio	GW opgw	2271	9513	-18663	2271	9513	18663	4,542	19,026	0	0	943,9116	4,542	0	19,026	Wind angle: 90 dgr					
Permanent loads yg= 0.!		15187	63661	-126769	15187	63661	126769	30,374	127,322	0	0	5220,202	30,374	0	127,322						
Wind angle:	380C1F2 / 3	15186	63171	-126409	0	0	0	15,186	63,171	-126,409	-4108,29	2053,058	15,186	-126,409	63,171						
	380C1F3 / 3	15186	62582	-126005	0	0	0	15,186	62,582	-126,005	-3024,12	1501,968	15,186	-126,005	62,582						
	150C1F1 / 1	3797	15915	-31692	0	0	0	3,797	15,915	-31,692	-1299,37	673,3985	3,797	-31,692	15,915						
	150C1F2 / 1	3797	15793	-31602	3797	15793	31602	7,594	31,586	0	0	1068,312	7,594	0	31,586						
	150C1F3 / 1	3797	15645	-31501	0	0	0	3,797	15,645	-31,501	-756,024	396,3635	3,797	-31,501	15,645						
1a	Comp. gl	3462	13901	-28691	3463	21310	37236	6,925	35,211	8,545	140,9925	595,434	6,925	8,545	35,211	1a	-5474,3	11922,11	74,173	-205,331	349,579
Wind, 10 dg	GW / opgw	1669	6860	-13909	1670	12957	21716	3,339	19,817	7,807	385,9	982,0953	3,339	7,807	19,817	Wind angle: -45 dgr					
Permanent loads yg= 0.!		12781	51614	-106172	12785	82007	141781	25,566	133,621	35,609	1459,969	5478,461	25,566	35,609	133,621						
Wind angle:	380C1F2 / 3	12781	51430	-106098	0	0	0	12,781	51,43	-106,098	-3448,19	1671,475	12,781	-106,098	51,43						
	380C1F3 / 3	12781	51207	-106018	0	0	0	12,781	51,207	-106,018	-2544,43	1228,968	12,781	-106,018	51,207						
	150C1F1 / 1	3195	12903	-26543	0	0	0	3,195	12,903	-26,543	-1088,26	546,5955	3,195	-26,543	12,903						
	150C1F2 / 1	3195	12857	-26524	3196	19731	34396	6,391	32,588	7,872	255,84	1094,261	6,391	7,872	32,588						
	150C1F3 / 1	3195	12802	-26505	0	0	0	3,195	12,802	-26,505	-636,12	324,8205	3,195	-26,505	12,802						
1b	Comp. gl	3461	15402	-32684	3461	16840	33512	6,922	32,242	0,828	13,662	546,4392	6,922	0,828	32,242	1b	-8809,74	11733,25	74,127	-304,658	348,801
Wind, -20 d	GW / opgw	1668	7541	-15924	1668	8758	16916	3,336	16,299	0,992	49,03456	808,1983	3,336	0,992	16,299	Wind angle: -45 dgr					
Permanent loads yg= 0.!		12774	58633	-124351	12774	64574	128000	25,548	123,207	3,649	149,609	5051,487	25,548	3,649	123,207						
Wind angle:	380C1F2 / 3	12774	58589	-124355	0	0	0	12,774	58,589	-124,355	-4041,54	1904,143	12,774	-124,355	58,589						
	380C1F3 / 3	12774	58535	-124361	0	0	0	12,774	58,535	-124,361	-2984,66	1404,84	12,774	-124,361	58,535						
	150C1F1 / 1	3193	14658	-31088	0	0	0	3,193	14,658	-31,088	-1274,61	618,5395	3,193	-31,088	14,658						

	150C1F2 / 13193	14647	-31089	3194	15990	31856	6,387	30,637	0,767	24,9275	1030,831	6,387	0,767	30,637								
	150C1F3 / 13193	14634	-31090	0	0	0	3,193	14,634	-31,09	-746,16	368,7775	3,193	-31,09	14,634								
3	Comp. gl 6606	24590	-50966	6608	34473	60583	13,214	59,063	9,617	158,6805	1002,117	13,214	9,617	59,063		3	-7986,88	14712,77	97,388	-286,542	438,388
Wind+ice, -	GW / opgw 3238	12311	-25131	3240	20451	34266	6,478	32,762	9,135	451,5431	1624,355	6,478	9,135	32,762		Wind angle: -45 dgr					
Permanent loads yg= 0.!	15538	63933	-133227	15542	86376	155950	31,08	150,309	22,723	931,643	6162,669	31,08	22,723	150,309							
Wind angle:	380C1F2 / 3 15538	63792	-133198	0	0	0	15,538	63,792	-133,198	-4328,94	2073,24	15,538	-133,198	63,792							
	380C1F3 / 3 15538	63619	-133169	0	0	0	15,538	63,619	-133,169	-3196,06	1526,856	15,538	-133,169	63,619							
	150C1F1 / 13885	15983	-33307	0	0	0	3,885	15,983	-33,307	-1365,59	676,6705	3,885	-33,307	15,983							
	150C1F2 / 13885	15948	-33299	3885	21007	38248	7,77	36,955	4,949	160,8425	1243,773	7,77	4,949	36,955							
	150C1F3 / 13885	15905	-33292	0	0	0	3,885	15,905	-33,292	-799,008	403,0875	3,885	-33,292	15,905							
4	Comp. gl 4665	17581	-37358	4665	18828	37773	9,33	36,409	0,415	6,8475	620,2202	9,33	0,415	36,409		4	-8922,29	11919,34	89,805	-307,891	355,089
Constructio	GW opgw 2271	8598	-18190	2271	9615	18753	4,542	18,213	0,563	27,82909	903,7251	4,542	0,563	18,213		Wind angle: -45 dgr					
Permanent loads yg= 0.!	15186	58808	-124724	15187	64197	127187	30,373	123,005	2,463	100,983	5043,205	30,373	2,463	123,005							
Wind angle:	380C1F2 / 3 15186	58765	-124732	0	0	0	15,186	58,765	-124,732	-4053,79	1909,863	15,186	-124,732	58,765							
	380C1F3 / 3 15186	58713	-124742	0	0	0	15,186	58,713	-124,742	-2993,81	1409,112	15,186	-124,742	58,713							
	150C1F1 / 13797	14702	-31181	0	0	0	3,797	14,702	-31,181	-1278,42	623,6655	3,797	-31,181	14,702							
	150C1F2 / 13797	14691	-31183	3797	15913	31691	7,594	30,604	0,508	16,51	1036,397	7,594	0,508	30,604							
	150C1F3 / 13797	14678	-31185	0	0	0	3,797	14,678	-31,185	-748,44	373,1555	3,797	-31,185	14,678							

W4H400Z+ 14-Y2

Hoogte mast	Ber & bijlage		58	m		
Hoogte onderste stroomdraad (F3)			32	m		
			Hoogte		Excentriciteit ophanging t.o.v. hart mast	
Bliksemdraad = GW / C H_{mast} -	0,57	m =	57,43	m	0,761	m
1e traverse - 380C1F1 F2 +	8,5	m =	49	m	0	m
1e traverse - 150C1F1			49		5,5	m
2e traverse - 380C1F2 F3 +	8,5	m =	40,5	m	0	m
2e traverse - 150C1F2 F3 +			40,5	m	5,5	m
3e traverse - 380C1F3			32	m	0	m
3e traverse - 150C1F3			32		5,5	m
Passieve lijn = Comp C. F3 -	7,5	m =	24,5	m	2,05	m

Uit mast			Uit lijnen				
ULS (incl bel factoren)			SLS				
N	V	M	Nmin	Nmax	Vmax	Mlangs;ma	Mdwars;max
[kN]	[kN]	[kNm]	[kN]	[kN]	[kN]	[kNm]	[kNm]
857	116	3147	118	208	854	7458	34240

		Belastingen uit lijnen						Belasting uit mast		
			M_{langs}	M_{dwars}	N	V_{langs}	V_{dwars}	N	V	M
Perm load 1,2	0 deg	1a	0	19563	118	0	485	714	77	2098
		1b	0	21179	118	0	526	714	77	2098
		3	0	30272	208	0	756	714	77	2098
		4	0	20911	136	0	519	714	77	2098
	45 deg	1a	-7458	25210	118	-181	623	714	77	2098
		1b	-283	21785	118	-7	541	714	77	2098
		3	-1417	32358	208	-34	807	714	77	2098
		4	-184	21473	136	-4	533	714	77	2098
	90 deg	1a	0	30255	118	0	746	714	77	2098
		1b	0	22340	118	0	554	714	77	2098
		3	0	34240	208	0	854	714	77	2098
		4	0	21994	136	0	546	714	77	2098
	-45 deg	1a	7458	25210	118	181	623	714	77	2098
		1b	283	21785	118	7	541	714	77	2098
		3	1417	32358	208	34	807	714	77	2098
		4	184	21473	136	4	533	714	77	2098

regel			Loadcase	Totaal M_{langs}	M_{dwars}	N	V_{langs}	V_{dwars}	Totaal moment		M langs max	M dwars max	N max	V langs max	V dwars max	M tot max	N min
1	Perm load 1,2	0 deg	1a	2098	21661	832	77	562	21762,69	1							
2	Perm load 1,2	0 deg	1b	2098	23277	832	77	603	23371,59	2							x
3	Perm load 1,2	0 deg	3	2098	32370	922	77	834	32438,13	3							
4	Perm load 1,2	0 deg	4	2098	23009	850	77	597	23104,5	4							
5										5							
6	Perm load 1,2	45 deg	1a	9556	27308	832	259	700	28931,74	6	x			x			
7	Perm load 1,2	45 deg	1b	2381	23883	832	84	618	24001,5	7							
8	Perm load 1,2	45 deg	3	3515	34456	922	111	885	34634,41	8							
9	Perm load 1,2	45 deg	4	2282	23571	850	82	610	23681,69	9							
10										10							
11	Perm load 1,2	90 deg	1a	2098	32353	832	77	823	32420,81	11							
12	Perm load 1,2	90 deg	1b	2098	24438	832	77	632	24527,71	12							
13	Perm load 1,2	90 deg	3	2098	36338	922	77	931	36398,1	13		x	x		x	x	
14	Perm load 1,2	90 deg	4 Construct	2098	24092	850	77	623	24183,59	14							
15										15							
16	Perm load 1,2	-45 deg	1a	8941	27308	832	259	700	28734,63	16				x			
17	Perm load 1,2	-45 deg	1b	1767	23883	832	84	618	23948,34	17							
18	Perm load 1,2	-45 deg	3	2900	34456	922	111	885	34577,45	18							
19	Perm load 1,2	-45 deg	4	1668	23571	850	82	610	23630,39	19							
				9556	36338	922	259	931	36398								
						832											

samenvatting

	Mast	Bijlage		Wind	Loadcase	M_{langs}	M_{dwars}	N	V_{langs}	V_{dwars}
2	W4H400Z+	14-Y2	Perm load :	0 deg	1b	2098	23277	832	77	603
6	W4H400Z+	14-Y2	Perm load :	45 deg	1a	9556	27308	832	259	700
13	W4H400Z+	14-Y2	Perm load :	90 deg	3	2098	36338	922	77	931
	W4H400Z+	14-Y2	#N/B	#N/B	#N/B	#N/B	#N/B	#N/B	#N/B	#N/B
	W4H400Z+	14-Y2	#N/B	#N/B	#N/B	#N/B	#N/B	#N/B	#N/B	#N/B
	W4H400Z+	14-Y2	#N/B	#N/B	#N/B	#N/B	#N/B	#N/B	#N/B	#N/B

W4H400Z+5 TOWER APPENDIX: Y2

Loadcases for tower strength (serviceability limit state)

Loadcase according to

50341-3-15			AHEAD			BACK	Totaal Vert	Dwars	Langs	Belastingen op mastvoet, per lijn M_{langs}	M_{dwars}	N	V_{langs}	V_{dwars}	Belasting op mastvoet, belastinggeval	M_{langs}	M_{dwars}	N	V_{langs}	V_{dwars}
	Attachment po [N]	[N]	[N]	[N]	[N]	[N]	[kN]	[kN]	[kN]											
1a Comp. gl	3847	15792	31671	3847	15792	-31671	7,694	31,584	0	0	789,5807	7,694	0	31,584	1a	0	19563,33	117,922	0	484,966
Wind, 10 dgr GW / opgw	1855	8009	15602	1855	8009	-15602	3,71	16,018	0	0	922,7371	3,71	0	16,018	Wind angle: 0 dgr					
Permanent loads yg= 1.0:	14202	58785	117229	14202	58785	-117229	28,404	117,57	0	0	5760,93	28,404	0	117,57						
Wind angle: 380C1F2 / 3	14202	58345	116911	14202	58345	-116911	28,404	116,69	0	0	4725,945	28,404	0	116,69						
380C1F3 / 3	14202	57816	116556	14202	57816	-116556	28,404	115,632	0	0	3700,224	28,404	0	115,632						
150C1F1 / 1	3551	14696	29307	3551	14696	-29307	7,102	29,392	0	0	1479,269	7,102	0	29,392						
150C1F2 / 1	3551	14586	29228	3551	14586	-29228	7,102	29,172	0	0	1220,527	7,102	0	29,172						
150C1F3 / 1	3551	14454	29139	3551	14454	-29139	7,102	28,908	0	0	964,117	7,102	0	28,908						
1b Comp. gl	3845	16749	35479	3845	16749	-35479	7,69	33,498	0	0	836,4655	7,69	0	33,498	1b	0	21179,23	117,856	0	525,898
Wind, -20 dg GW / opgw	1854	8209	17289	1854	8209	-17289	3,708	16,418	0	0	945,7075	3,708	0	16,418	Wind angle: 0 dgr					
Permanent loads yg= 1.0:	14194	63525	134464	14194	63525	-134464	28,388	127,05	0	0	6225,45	28,388	0	127,05						
Wind angle: 380C1F2 / 3	14194	63469	134468	14194	63469	-134468	28,388	126,938	0	0	5140,989	28,388	0	126,938						
380C1F3 / 3	14194	63399	134474	14194	63399	-134474	28,388	126,798	0	0	4057,536	28,388	0	126,798						
150C1F1 / 1	3549	15881	33616	3549	15881	-33616	7,098	31,762	0	0	1595,377	7,098	0	31,762						
150C1F2 / 1	3549	15867	33617	3549	15867	-33617	7,098	31,734	0	0	1324,266	7,098	0	31,734						
150C1F3 / 1	3549	15850	33619	3549	15850	-33619	7,098	31,7	0	0	1053,439	7,098	0	31,7						
3 Comp. gl	13213	41150	85996	13213	41150	-85996	26,426	82,3	0	0	2070,523	26,426	0	82,3	3	0	30272,21	207,63	0	756,388
Wind+ice, -5 GW / opgw	6530	20619	42601	6530	20619	-42601	13,06	41,238	0	0	2378,237	13,06	0	41,238	Wind angle: 0 dgr					
Permanent loads yg= 1.0:	22419	84563	176410	22419	84563	-176410	44,838	169,126	0	0	8287,174	44,838	0	169,126						
Wind angle: 380C1F2 / 3	22419	84393	176393	22419	84393	-176393	44,838	168,786	0	0	6835,833	44,838	0	168,786						
380C1F3 / 3	22419	84184	176381	22419	84184	-176381	44,838	168,368	0	0	5387,776	44,838	0	168,368						
150C1F1 / 1	5605	21141	44102	5605	21141	-44102	11,21	42,282	0	0	2133,473	11,21	0	42,282						
150C1F2 / 1	5605	21098	44098	5605	21098	-44098	11,21	42,196	0	0	1770,593	11,21	0	42,196						
150C1F3 / 1	5605	21046	44095	5605	21046	-44095	11,21	42,092	0	0	1408,599	11,21	0	42,092						
4 Comp. gl	4850	18179	38547	4850	18179	-38547	9,7	36,358	0	0	910,656	9,7	0	36,358	4	0	20911,05	135,96	0	519,31
Construction GW opgw	2356	8887	18744	2356	8887	-18744	4,712	17,774	0	0	1024,347	4,712	0	17,774	Wind angle: 0 dgr					
Permanent loads yg= 1.0:	16206	62083	131371	16206	62083	-131371	32,412	124,166	0	0	6084,134	32,412	0	124,166						
Wind angle: 380C1F2 / 3	16206	62028	131378	16206	62028	-131378	32,412	124,056	0	0	5024,268	32,412	0	124,056						
380C1F3 / 3	16206	61960	131388	16206	61960	-131388	32,412	123,92	0	0	3965,44	32,412	0	123,92						
150C1F1 / 1	4052	15521	32843	4052	15521	-32843	8,104	31,042	0	0	1565,63	8,104	0	31,042						
150C1F2 / 1	4052	15507	32844	4052	15507	-32844	8,104	31,014	0	0	1300,639	8,104	0	31,014						
150C1F3 / 1	4052	15490	32847	4052	15490	-32847	8,104	30,98	0	0	1035,932	8,104	0	30,98						
1a Comp. gl	3847	15304	31383	3849	25141	-43062	7,696	40,445	-11,679	-286,136	1006,679	7,696	-11,679	40,445	1a	-7457,96	25210,05	117,945	-181,355	622,954
Wind, 10 dgr GW / opgw	1855	7595	15258	1856	15557	-25580	3,711	23,152	-10,322	-592,792	1332,443	3,711	-10,322	23,152	Wind angle: 45 dgr					
Permanent loads yg= 1.0:	14202	56772	115961	14208	96926	-164152	28,41	153,698	-48,191	-2361,36	7531,202	28,41	-48,191	153,698						
Wind angle: 380C1F2 / 3	14202	56527	115846	14208	92953	-158730	28,41	149,48	-42,884	-1736,8	6053,94	28,41	-42,884	149,48						
380C1F3 / 3	14202	56231	115721	14207	88077	-152129	28,409	144,308	-36,408	-1165,06	4617,856	28,409	-36,408	144,308						
150C1F1 / 1	3551	14193	28990	3552	24231	-41038	7,103	38,424	-12,048	-590,352	1921,843	7,103	-12,048	38,424						
150C1F2 / 1	3551	14132	28961	3552	23238	-39682	7,103	37,37	-10,721	-434,201	1552,552	7,103	-10,721	37,37						
150C1F3 / 1	3551	14058	28930	3552	22019	-38032	7,103	36,077	-9,102	-291,264	1193,531	7,103	-9,102	36,077						
1b Comp. gl	3845	16682	35488	3846	17755	-35908	7,691	34,437	-0,42	-10,29	859,4731	7,691	-0,42	34,437	1b	-283,127	21785,09	117,86	-6,735	540,689
Wind, -20 dg GW / opgw	1854	8158	17289	1854	9047	-17847	3,708	17,205	-0,558	-32,0459	990,9049	3,708	-0,558	17,205	Wind angle: 45 dgr					
Permanent loads yg= 1.0:	14194	63255	134495	14195	67668	-136382	28,389	130,923	-1,887	-92,463	6415,227	28,389	-1,887	130,923						
Wind angle: 380C1F2 / 3	14194	63220	134501	14195	67225	-136050	28,389	130,445	-1,549	-62,7345	5283,023	28,389	-1,549	130,445						
380C1F3 / 3	14194	63177	134510	14195	66693	-135679	28,389	129,87	-1,169	-37,408	4155,84	28,389	-1,169	129,87						
150C1F1 / 1	3549	15814	33624	3549	16917	-34096	7,098	32,731	-0,472	-23,128	1642,858	7,098	-0,472	32,731						
150C1F2 / 1	3549	15805	33625	3549	16806	-34013	7,098	32,611	-0,388	-15,714	1359,785	7,098	-0,388	32,611						
150C1F3 / 1	3549	15794	33628	3549	16673	-33920	7,098	32,467	-0,292	-9,344	1077,983	7,098	-0,292	32,467						
3 Comp. gl	13213	40808	86040	13214	46287	-88135	26,427	87,095	-2,095	-51,3275	2188,003	26,427	-2,095	87,095	3	-1416,93	32357,59	207,637	-33,923	807,422
Wind+ice, -5 GW / opgw	6530	20359	42602	6531	24810	-45208	13,061	45,169	-2,606	-149,663	2603,995	13,061	-2,606	45,169	Wind angle: 45 dgr					
Permanent loads yg= 1.0:	22419	83757	176384	22421	97961	-185669	44,84	181,718	-9,285	-454,965	8904,182	44,84	-9,285	181,718						
Wind angle: 380C1F2 / 3	22419	83653	176391	22421	96495	-184254	44,84	180,148	-7,863	-318,452	7295,994	44,84	-7,863	180,148						
380C1F3 / 3	22419	83526	176403	22420	94735	-182634	44,839	178,261	-6,231	-199,392	5704,352	44,839	-6,231	178,261						
150C1F1 / 1	5605	20939	44096	5605	24490	-46417	11,21	45,429	-2,321	-113,729	2287,676	11,21	-2,321	45,429						
150C1F2 / 1	5605	20913	44098	5605	24124	-46063	11,21	45,037	-1,965	-79,5825	1885,654	11,21	-1,965	45,037						
150C1F3 / 1	5605	20881	44101	5605	23684	-45658	11,21	44,565	-1,557	-49,824	1487,735	11,21	-1,557	44,565						
4 Comp. gl	4850	18115	38561	4850	19090	-38769	9,7	37,205	-0,208	-5,096	931,4075	9,7	-0,208	37,205	4	-184,135	21473,47	135,963	-4,347	533,054
Construction GW opgw	2356	8839	18750	2356	9623	-19080	4,712	18,462	-0,33	-18,9519	1063,858	4,712	-0,33	18,462	Wind angle: 45 dgr					
Permanent loads yg= 1.0:	16206	61820	131416	16207	65954	-132701	32,413	127,774	-1,285	-62,965	6260,926	32,413	-1,285	127,774						
Wind angle: 380C1F2 / 3	16206	61786	131424	16207	65548	-132450	32,413	127,334	-1,026	-41,553	5157,027	32,413	-1,026	127,334						
380C1F3 / 3	16206	61743	131435	16207	65059	-132172	32,413	126,802	-0,737	-23,584	4057,664	32,413	-0,737	126,802						
150C1F1 / 1	4052	15455	32854	4052	16488	-33175	8,104	31,943	-0,321	-15,729	1609,779	8,104	-0,321	31,943						
150C1F2 / 1	4052	15446	32856	4052	16387	-33112	8,104	31,833	-0,256	-10,368	1333,809	8,104	-0,256	31,833						
150C1F3 / 1	4052	15436	32859	4052	16265	-33043	8,104	31,701	-0,184	-5,888	1059,004	8,104	-0,184	31,701						
1a Comp. gl	3848	24165	41727	3848	24165	-41727	7,696	48,33	0	0	1199,862	7,696	0	48,33	1a	0	30254,85	117,962	0	746,12
Wind, 10 dgr GW / opgw	1856	14822	24546	1856	14822	-24546	3,712	29,644	0	0	1705,28	3,712	0	29,644	Wind angle: 90 dgr					
Permanent loads yg= 1.0:	14208	93010	158807	14208	93010	-158807	28,416	186,02	0	0	9114,98	28,416	0	186,02						
Wind angle: 380C1F2 / 3	14207	89359	153857	14207	89359	-153857	28,414	178,718	0	0	7238,079	28,414	0	178,718						
380C1F3 / 3	14206	84889	147858	14206	84889	-147858	28,412	169,778	0	0	5432,896	28,412	0	169,778						
150C1F1 / 1	3552	23253	39702	3552	23253	-39702	7,104	46,506	0	0	2317,866	7,104	0	46,506						
150C1F2 / 1	3552	22340	38464	3552	22340	-38464	7,104	44,68	0	0	1848,612	7,104	0	44,68						
150C1F3 / 1	3552	21222	36964	3552	21222	-36964	7,104	42,444	0	0	1397,28	7,104	0	42,444						
1b Comp. gl	3846	17650	35833	3846	17650	-35833	7,692	35,3	0	0	880,6186	7,692	0	35,3	1b	0	22339,82	117,864	0	554,246
Wind, -20 dg GW / opgw	1854	8956	17760	1854	8956	-17760	3,708	17,912	0	0	1031,508	3,708	0	17,912	Wind angle: 90 dgr					
Permanent loads yg= 1.0:	14195	67231	136055	14195	67231	-136055	28,39	134,462	0	0	6588,638	28,39	0	134,462						
Wind angle: 380C1F2 / 3	14195	66831	135772	14195	66831	-135772	28,39	133,662	0	0	5413,311	28,39	0	133,662						
380C1F3 / 3	14195	66351	135458	14195	66351	-135458	28,39	132,702	0	0	4246,464	28,39	0	132,702						
150C1F1 / 1	3549	16808	34014	3549	16808	-34014	7,098	33,616	0	0	1686,223	7,098	0	33,616						
150C1F2 / 1	3549	16708	33943	3549	16708	-33943	7,098	33,416	0	0	1392,387	7,098	0	33,416						
150C1F3 / 1	3549	16588	33865	3549	16588	-33865	7,098	33,176	0	0	1100,671	7,098	0	33,176						
3 Comp. gl	13214	45753	87767	13214	45753	-87767	26,428	91,506	0	0	2296,074	26,428	0	91,506	3	0	34239,58	207,642	0	853,526
Wind+ice, -5 GW / opgw	6531	24365	44814	6531	24365	-44814	13,062	48,73	0	0	2808,504	13,062	0	48,73	Wind angle: 90 dgr					
Permanent loads yg= 1.0:	22421	96515	184273	22421	96515	-184273	44,842	193,03	0	0	9458,47	44,842	0	193,03						
Wind angle: 380C1F2 / 3	22420	95194	183047	22420	95194	-183047	44,84	190,388	0	0	7710,714	44,84	0	190,388						
380C1F3 / 3	22420	93607	181648	22420	93607	-181648	44,84	187,214	0	0	5990,848	44,84	0	187,214						
150C1F1 / 1	5605	24129	46068	5605	24129	-46068	11,21	48,258	0	0	2426,297	11,21	0	48,258						
150C1F2 / 1	5605	23798	45762	5605	23798	-45762	11,21	47,596	0	0	1989,293	11,21	0	47,596						
150C1F3 / 1	5605	23402	45412	5605	23402	-45412	11,21	46,804	0	0	1559,383	11,21	0	46,804						
4 Comp. gl	4850	18997	38722	4850	18997	-38722	9,7	37,994	0	0	950,738	9,7	0	37,994	4	0	21994,42	135,964	0	545,796
Construction GW opgw	2356	9545	19023	2356	9545	-19023	4,712	19,09	0	0	1099,925	4,712	0	19,09	Wind angle: 90 dgr					
Permanent loads yg= 1.0:	16207	65554	132453	16207	65554	-132453	32,414	131,108	0	0	6424,292	32,414	0	131,108						
Wind angle: 380C1F2 / 3	16207	65187	132241	16207	65187	-132241	32,414	130,374	0	0	5280,147	32,414	0	130,374						
380C1F3 / 3	16206	64744	132009	16206	64744	-132009	32,412	129,488	0	0	4143,616	32,412	0	129,488						
150C1F1 / 1	4052	16388	33113	4052	16388	-33113	8,104	32,776	0	0	1650,596	8,104	0	32,776						
150C1F2 / 1	4052	16297	33060	4052	16297	-33060	8,104	32,594	0	0	1364,629	8,104	0	32,594						
150C1F3 / 1	4052	16186	33002	4052	16186	-33002	8,104	32,372	0	0	1080,476	8,104	0	32,372						
1a Comp. gl	3849	25141	43062	3847	15304	-31383	7,696	40,445	11,679	286,1355	1006,679	7,696	11,679	40,445	1a	7457,961	25210,05	117,945	181,355	622,954
Wind, 10 dgr GW / opgw	1856	15557	25580	1855	7595	-15258	3,711	23,152	10,322	592,7925	1332,443	3,711	10,322	23,152	Wind angle: -45 dgr					
Permanent loads yg= 1.0:	14208	96926	164152	14202	56772	-115961	28,41	153,698	48,191	2361,359	7531,202	28,41	48,191	153,698						
Wind angle: 380C1F2 / 3	14208	92953	158730	14202	56527	-115846	28,41	149,48	42,884	1736,802	6053,94	28,41	42,884	149,48						
380C1F3 / 3	14207	88077	152129	14202	56231	-115721	28,409	144,308	36,408	1165,056	4617,856	28,409	36,408	144,308						
150C1F1 / 1	3552	24231	41038	3551	14193	-28990	7,103	38,424	12,048	590,352	1921,843	7,103	12,048	38,424						
150C1F2 / 1	3552	23238	39682	3551	14132	-28961	7,103	37,37	10,721	434,2005	1552,552	7,103	10,721	37,37						
150C1F3 / 1	3552	22019	38032	3551	14058	-28930	7,103	36,077	9,102	291,264	1193,531	7,103	9,102	36,077						
1b Comp. gl	3846	17755	35908	3845	16682	-35488	7,691	34,437	0,42	10,29	859,4731	7,691	0,42	34,437	1b	283,1274	21785,09	117,86	6,735	540,689
Wind, -20 dg GW / opgw	1854	9047	17847	1854	8158	-17289	3,708	17,205	0,558	32,04594	990,9049	3,708	0,558	17,205	Wind angle: -45 dgr					

Permanent loads yg= 1.0		14195	67668	136382	14194	63255	-134495	28,389	130,923	1,887	92,463	6415,227	28,389	1,887	130,923						
Wind angle:	380C1F2 / 3	14195	67225	136050	14194	63220	-134501	28,389	130,445	1,549	62,7345	5283,023	28,389	1,549	130,445						
	380C1F3 / 3	14195	66693	135679	14194	63177	-134510	28,389	129,87	1,169	37,408	4155,84	28,389	1,169	129,87						
	150C1F1 / 1	3549	16917	34096	3549	15814	-33624	7,098	32,731	0,472	23,128	1642,858	7,098	0,472	32,731						
	150C1F2 / 1	3549	16806	34013	3549	15805	-33625	7,098	32,611	0,388	15,714	1359,785	7,098	0,388	32,611						
	150C1F3 / 1	3549	16673	33920	3549	15794	-33628	7,098	32,467	0,292	9,344	1077,983	7,098	0,292	32,467						
3	Comp. gl	13214	46287	88135	13213	40808	-86040	26,427	87,095	2,095	51,3275	2188,003	26,427	2,095	87,095	3	1416,934	32357,59	207,637	33,923	807,422
Wind+ice, -5	GW / opgw	6531	24810	45208	6530	20359	-42602	13,061	45,169	2,606	149,6626	2603,995	13,061	2,606	45,169	Wind angle: -45 dgr					
Permanent loads yg= 1.0		22421	97961	185669	22419	83757	-176384	44,84	181,718	9,285	454,965	8904,182	44,84	9,285	181,718						
Wind angle:	380C1F2 / 3	22421	96495	184254	22419	83653	-176391	44,84	180,148	7,863	318,4515	7295,994	44,84	7,863	180,148						
0	380C1F3 / 3	22420	94735	182634	22419	83526	-176403	44,839	178,261	6,231	199,392	5704,352	44,839	6,231	178,261						
	150C1F1 / 1	5605	24490	46417	5605	20939	-44096	11,21	45,429	2,321	113,729	2287,676	11,21	2,321	45,429						
	150C1F2 / 1	5605	24124	46063	5605	20913	-44098	11,21	45,037	1,965	79,5825	1885,654	11,21	1,965	45,037						
	150C1F3 / 1	5605	23684	45658	5605	20881	-44101	11,21	44,565	1,557	49,824	1487,735	11,21	1,557	44,565						
4	Comp. gl	4850	19090	38769	4850	18115	-38561	9,7	37,205	0,208	5,096	931,4075	9,7	0,208	37,205	4	184,1349	21473,47	135,963	4,347	533,054
Construction	GW opgw	2356	9623	19080	2356	8839	-18750	4,712	18,462	0,33	18,9519	1063,858	4,712	0,33	18,462	Wind angle: -45 dgr					
Permanent loads yg= 1.0		16207	65954	132701	16206	61820	-131416	32,413	127,774	1,285	62,965	6260,926	32,413	1,285	127,774						
Wind angle:	380C1F2 / 3	16207	65548	132450	16206	61786	-131424	32,413	127,334	1,026	41,553	5157,027	32,413	1,026	127,334						
	380C1F3 / 3	16207	65059	132172	16206	61743	-131435	32,413	126,802	0,737	23,584	4057,664	32,413	0,737	126,802						
	150C1F1 / 1	4052	16488	33175	4052	15455	-32854	8,104	31,943	0,321	15,729	1609,779	8,104	0,321	31,943						
	150C1F2 / 1	4052	16387	33112	4052	15446	-32856	8,104	31,833	0,256	10,368	1333,809	8,104	0,256	31,833						
	150C1F3 / 1	4052	16265	33043	4052	15436	-32859	8,104	31,701	0,184	5,888	1059,004	8,104	0,184	31,701						
								0	0	0	0	0	0	0	0	0	0	0	0	0	0
								0	0	0	0	0	0	0	0	0					
								0	0	0	0	0	0	0	0						
								0	0	0	0	0	0	0	0						
								0	0	0	0	0	0	0	0						
								0	0	0	0	0	0	0	0						
								0	0	0	0	0	0	0	0						
								0	0	0	0	0	0	0	0						
								0	0	0	0	0	0	0	0	0	0	0	0	0	0
								0	0	0	0	0	0	0	0	0					
								0	0	0	0	0	0	0	0						
								0	0	0	0	0	0	0	0						
								0	0	0	0	0	0	0	0						
								0	0	0	0	0	0	0	0						
								0	0	0	0	0	0	0	0						
								0	0	0	0	0	0	0	0						
								0	0	0	0	0	0	0	0	0	0	0	0	0	0
								0	0	0	0	0	0	0	0	0					
								0	0	0	0	0	0	0	0						
								0	0	0	0	0	0	0	0						
								0	0	0	0	0	0	0	0						
								0	0	0	0	0	0	0	0						
								0	0	0	0	0	0	0	0						
								0	0	0	0	0	0	0	0						
								0	0	0	0	0	0	0	0	0	0	0	0	0	0
								0	0	0	0	0	0	0	0	0					
								0	0	0	0	0	0	0	0						
								0	0	0	0	0	0	0	0						
								0	0	0	0	0	0	0	0						
								0	0	0	0	0	0	0	0						
								0	0	0	0	0	0	0	0						
								0	0	0	0	0	0	0	0						
								0	0	0	0	0	0	0	0	0	0	0	0	0	0
								0	0	0	0	0	0	0	0	0					
								0	0	0	0	0	0	0	0						
								0	0	0	0	0	0	0	0						
								0	0	0	0	0	0	0	0						
								0	0	0	0	0	0	0	0						
								0	0	0	0	0	0	0	0						
								0	0	0	0	0	0	0	0						
								0	0	0	0	0	0	0	0	0	0	0	0	0	0
								0	0	0	0	0	0	0	0	0					
								0	0	0	0	0	0	0	0						
								0	0	0	0	0	0	0	0						
								0	0	0	0	0	0	0	0						
								0	0	0	0	0	0	0	0						
								0	0	0	0	0	0	0	0						
								0	0	0	0	0	0	0	0						
								0	0	0	0	0	0	0	0	0	0	0	0	0	0
								0	0	0	0	0	0	0	0	0					
								0	0	0	0	0	0	0	0						
								0	0	0	0	0	0	0	0						
								0	0	0	0	0	0	0	0						
								0	0	0	0	0	0	0	0						
								0	0	0	0	0	0	0	0						
								0	0	0	0	0	0	0	0						
								0	0	0	0	0	0	0	0	0	0	0	0	0	0
								0	0	0	0	0	0	0	0	0					
								0	0	0	0	0	0	0	0						
								0	0	0	0	0	0	0	0						
								0	0	0	0	0	0	0	0						
								0	0	0	0	0	0	0	0						
								0	0	0	0	0	0	0	0						
								0	0	0	0	0	0	0	0						
								0	0	0	0	0	0	0	0	0	0	0	0	0	0
								0	0	0	0	0	0	0	0	0					
								0	0	0	0	0	0	0	0						
								0	0	0	0	0	0	0	0						
								0	0	0	0	0	0	0	0						
								0	0	0	0	0	0	0	0						
								0	0	0	0	0	0	0	0						
								0	0	0	0	0	0	0	0						
								0	0	0	0	0	0	0	0	0	0	0	0	0	0
								0	0	0	0	0	0	0	0	0					
								0	0	0	0	0	0	0	0						
								0	0	0	0	0	0	0	0						
								0	0	0	0	0	0	0	0						
								0	0	0	0	0	0	0	0						
								0	0	0	0	0	0	0	0						
								0	0	0	0	0	0	0	0						
								0	0	0	0	0	0	0	0	0	0	0	0	0	0
								0	0	0	0	0	0	0	0	0					
								0	0	0	0	0	0	0	0						
								0	0	0	0	0	0	0	0						
								0	0	0	0	0	0	0	0						
								0	0	0	0	0	0	0	0						
								0	0	0	0	0	0	0	0						
								0	0	0	0	0	0	0	0						
								0	0	0	0	0	0	0	0	0	0	0	0	0	0
								0	0	0	0	0	0	0	0	0					
								0	0	0	0	0	0	0	0						
								0	0	0	0	0	0	0	0						
								0	0	0	0	0	0	0	0						
								0	0	0	0	0	0	0	0						
								0	0	0	0	0	0	0	0						
								0	0	0	0	0	0	0	0						
								0	0	0	0	0	0	0	0	0	0	0	0	0	0
								0	0	0	0	0	0	0	0	0					
								0	0	0	0	0	0	0	0						
								0	0	0	0	0	0	0	0						
								0	0	0	0	0	0	0	0						
								0	0	0	0	0	0	0	0						
								0	0	0	0	0	0	0	0						
								0	0	0	0	0	0	0	0						
								0	0	0	0	0	0	0	0	0	0	0	0	0	0
								0	0	0	0	0	0	0	0	0					
								0	0	0	0	0	0	0	0						
								0	0	0	0	0	0	0	0						
								0	0	0	0	0	0	0	0						
								0	0	0	0	0	0	0	0						
								0	0	0	0	0	0	0	0						
								0	0	0	0	0	0	0	0						
								0	0	0	0	0	0	0	0	0	0	0	0	0	0
								0	0	0	0	0	0	0	0	0					
								0	0	0	0	0	0	0	0						
								0	0	0	0	0	0	0	0						
								0	0	0	0	0	0	0	0						
								0	0	0	0	0	0	0	0						
								0	0	0	0	0	0	0	0						
								0	0	0	0	0	0	0	0						
								0	0	0	0	0	0	0	0	0	0	0	0	0	0
								0	0	0	0	0	0	0	0	0					
								0	0	0	0	0	0	0	0						
								0	0	0	0	0	0	0	0						
								0	0	0	0	0	0	0	0						
								0	0	0	0	0	0	0	0						
								0	0	0	0	0	0	0	0						
								0	0	0	0	0	0	0	0						
								0	0	0	0	0	0	0	0	0	0	0	0	0	0
								0	0	0	0	0	0	0	0	0					
								0	0	0	0	0	0	0	0						

W4S400Z+ 15-AA

Hoogte mast	Ber & bijlage	58 m			
Hoogte onderste stroomdraad (F3)		32 m			
		Hoogte		Excentriciteit ophanging t.o.v. hart mast	
Bliksemdraad = GW / (H_{mast} -	0,716 m =	57,284 m		1,459 m	
1e traverse - 380C1F1 F2 +	8,5 m =	49 m		4,737 m	
1e traverse - 150C1F1		49		-3,358 m	
2e traverse - 380C1F2 F3 +	8,5 m =	40,5 m		4,737 m	
2e traverse - 150C1F2 F3 +		40,5 m		-3,358 m	
3e traverse - 380C1F3		32 m		4,737 m	
3e traverse - 150C1F3		32		-3,358 m	
Passieve lijn = Comp C F3 -	7,5 m =	24,5 m		1,886 m	

Uit mast			Uit lijnen				
(excl belastingsfactoren)			(incl belastingsfactoren)				
N	V	M	Nmin	Nmax	Vmax	Mlangs;ma	Mdwars;max
[kN]	[kN]	[kNm]	[kN]	[kN]	[kN]	[kNm]	[kNm]
443	102	2857	110	303	361	0	15110

			Belastingen uit lijnen					Belasting uit mast		
			M_{langs}	M_{dwars}	N	V_{langs}	V_{dwars}	N	V	M
Perm load 1,2	0 deg	1a	0	2634	157	0	54	443	102	2857
		1b	0	2938	159	0	62	443	19	536
		3	0	4607	303	0	94	443	29	804
		4	0	3071	187	0	63	443	19	536
		6	0	2882	176	0	59			
	45 deg	1a	0	9379	152	0	220	443	102	2857
		1b	0	4271	159	0	94	443	19	536
		3	0	8500	302	0	190	443	29	804
		4	0	4363	186	0	95	443	19	536
	90 deg	1a	0	15110	149	0	361	443	102	2857
		1b	0	5419	158	0	122	443	19	536
		3	0	11848	300	0	273	443	29	804
		4	0	5473	186	0	122	443	19	536
	-45 deg	1a	0	8274	153	0	193	443	102	2857
		1b	0	4053	159	0	89	443	19	536
		3	0	7864	302	0	175	443	29	804
		4	0	4152	187	0	90	443	19	536
	0 deg	1a	0	2069	118	0	43	443	102	2857
		1b	0	2349	120	0	50	443	19	536
		3	0	4117	265	0	85	443	29	804
		4	0	2526	148	0	52	443	19	536
		6	0	2047	118	0	42			
	45 deg	1a	0	8952	113	0	212	443	102	2857
		1b	0	3712	120	0	83	443	19	536
		3	0	8047	264	0	182	443	29	804
		4	0	3836	148	0	84	443	19	536
	90 deg	1a	0	14754	110	0	355	443	102	2857
		1b	0	4893	119	0	112	443	19	536
		3	0	11432	261	0	265	443	29	804
		4	0	4967	147	0	112	443	19	536
	-45 deg	1a	**0**	**7829**	**114**	**0**	**184**	443	102	2857
		1b	**0**	**3489**	120	**0**	**78**	443	19	536
		3	**0**	7404	**264**	**0**	166	443	29	804
		4	**0**	3622	148	**0**	79	443	19	536

regel				Totaal												
			Loadcase	M_{langs}	M_{dwars}	N	V_{langs}	V_{dwars}	Totaal moment							
1	Perm load 1,2	0 deg	1a	2857	2634	600	102	54	3885,78	1	x			x		
2	Perm load 1,2	0 deg	1b	536	2938	602	19	62	2985,965	2						
3	Perm load 1,2	0 deg	3	804	4607	746	29	94	4676,86	3			x			
4	Perm load 1,2	0 deg	4	536	3071	630	19	63	3117,208	4						
5	Perm load 1,2	0 deg	6							5						
6										6						
7	Perm load 1,2	45 deg	1a	2020	11399	595	72	292	11576,35	7						
8	Perm load 1,2	45 deg	1b	379	4649	602	14	108	4664,759	8						
9	Perm load 1,2	45 deg	3	568	9068	745	20	211	9085,772	9						
10	Perm load 1,2	45 deg	4	379	4741	629	14	108	4756,543	10						
11										11						
12	Perm load 1,2	90 deg	1a	0	17967	592	0	463	17967,27	12		x			x	x
13	Perm load 1,2	90 deg	1b	0	5955	601	0	142	5954,665	13						
14	Perm load 1,2	90 deg	3	0	12651	743	0	302	12651,46	14						
15	Perm load 1,2	90 deg	4 Construc	0	6008	629	0	141	6008,442	15						
16										16						
17	Perm load 1,2	-45 deg	1a	2020	10294	596	72	265	10490,32	17						
18	Perm load 1,2	-45 deg	1b	379	4432	602	14	102	4447,869	18						
19	Perm load 1,2	-45 deg	3	568	8432	745	20	195	8450,96	19						
20	Perm load 1,2	-45 deg	4	379	4531	630	14	103	4546,718	20						
21										21						
22	Perm load 0,9	0 deg	1a	2857	2069	561	102	43	3527,689	22	x			x		
23	Perm load 0,9	0 deg	1b	536	2349	563	19	50	2409,406	23						
24	Perm load 0,9	0 deg	3	804	4117	708	29	85	4194,733	24						
25	Perm load 0,9	0 deg	4	536	2526	591	19	52	2582,566	25						
26	Perm load 0,9	0 deg	6							26						
27										27						
28	Perm load 0,9	45 deg	1a	2020	10972	556	72	284	11156,85	28						
29	Perm load 0,9	45 deg	1b	379	4091	563	14	97	4108,723	29						
30	Perm load 0,9	45 deg	3	568	8615	707	20	202	8634,2	30						
31	Perm load 0,9	45 deg	4 Construc	379	4215	591	14	98	4231,589	31						
32										32						
33	Perm load 0,9	90 deg	1a	0	17611	553	0	457	17611,49	33						
34	Perm load 0,9	90 deg	1b	0	5429	562	0	131	5428,771	34						
35	Perm load 0,9	90 deg	3	0	12235	704	0	294	12235,11	35						
36	Perm load 0,9	90 deg	4	0	5503	590	0	131	5502,985	36						
37										37						
38	Perm load 0,9	-45 deg	1a	2020	9849	557	72	257	10053,82	38						
39	Perm load 0,9	-45 deg	1b	379	3868	563	14	91	3886,23	39						
40	Perm load 0,9	-45 deg	3	568	7972	707	20	186	7992,409	40						
41	Perm load 0,9	-45 deg	4	379	4001	591	14	93	4018,461	41						
			Max	2857	17967	746	102	463	17967							

samenvatting

	Mast	Bijlage		Wind	Loadcase	M_{langs}	M_{dwars}	N	V_{langs}	V_{dwars}
1	W4S400Z+	15-AA	Perm load	0 deg	1a	2857	2634	600	102	54
3	W4S400Z+	15-AA	Perm load	0 deg	3	804	4607	746	29	94
12	W4S400Z+	15-AA	Perm load	90 deg	1a	0	17967	592	0	463
22	W4S400Z+	15-AA	Perm load	0 deg	1a	2857	2069	561	102	43

W4S400Z+5 TOWER APPENDIX: AA

Loadcases for tower strength (ultimate limit state)

Loadcase according to

50341-3-15

	Attachmentpo	[N]	AHEAD [N]	[N]	[N]	BACK [N]	[N]	Totaal Vert [kN]	Dwars [kN]	Langs [kN]	Belastingen op mastvoet, per lijn M_{langs}	M_{dwars}	N	V_{langs}	V_{dwars}	Belasting op mastvoet, belastinggeval	M_{langs}	M_{dwars}	N	V_{langs}	V_{dwars}
1a	Comp. gl	5122	1770	40154	5122	1770	-40154	10,244	3,54	0	0	106,0502	10,244	0	3,54	1a	0	2633,787	156,958	0	54,142
Wind, 10 dg	GW / opgw	2470	859	19377	2470	859	-19377	4,94	1,718	0	0	105,6214	4,94	0	1,718	Wind angle: 0 dgr					
Permanent loads yg= 1.:		18903	6524	147783	18903	6524	-147783	37,806	13,048	0	0	818,439	37,806	0	13,048						
Wind angle:	380C1F2 / 3	18903	6518	147783	18903	6518	-147783	37,806	13,036	0	0	707,045	37,806	0	13,036						
	380C1F3 / 3	18903	6511	147783	18903	6511	-147783	37,806	13,022	0	0	595,791	37,806	0	13,022						
	150C1F1 / 1	4726	1631	36946	4726	1631	-36946	9,452	3,262	0	0	128,0982	9,452	0	3,262						
	150C1F2 / 1	4726	1630	36946	4726	1630	-36946	9,452	3,26	0	0	100,2902	9,452	0	3,26						
	150C1F3 / 1	4726	1628	36946	4726	1628	-36946	9,452	3,256	0	0	72,45218	9,452	0	3,256						
1b	Comp. gl	5181	1972	45077	5181	1972	-45077	10,362	3,944	0	0	116,1707	10,362	0	3,944	1b	0	2937,521	159,124	0	61,56
Wind, -20 d	GW / opgw	2501	962	21970	2501	962	-21970	5,002	1,924	0	0	117,5123	5,002	0	1,924	Wind angle: 0 dgr					
Permanent loads yg= 1.:		19168	7427	169771	19168	7427	-169771	38,336	14,854	0	0	909,4436	38,336	0	14,854						
Wind angle:	380C1F2 / 3	19168	7426	169771	19168	7426	-169771	38,336	14,852	0	0	783,1036	38,336	0	14,852						
	380C1F3 / 3	19168	7424	169771	19168	7424	-169771	38,336	14,848	0	0	656,7336	38,336	0	14,848						
	150C1F1 / 1	4792	1857	42443	4792	1857	-42443	9,584	3,714	0	0	149,8029	9,584	0	3,714						
	150C1F2 / 1	4792	1856	42443	4792	1856	-42443	9,584	3,712	0	0	118,1529	9,584	0	3,712						
	150C1F3 / 1	4792	1856	42443	4792	1856	-42443	9,584	3,712	0	0	86,60093	9,584	0	3,712						
3	Comp. gl	20222	5365	122498	20222	5365	-122498	40,444	10,73	0	0	339,1624	40,444	0	10,73	3	0	4607,316	303,31	0	94,486
Wind+ice, -	GW / opgw	10011	2666	60775	10011	2666	-60775	20,022	5,332	0	0	334,6504	20,022	0	5,332	Wind angle: 0 dgr					
Permanent loads yg= 1.:		32379	10460	238677	32379	10460	-238677	64,758	20,92	0	0	1331,839	64,758	0	20,92						
Wind angle:	380C1F2 / 3	32379	10457	238677	32379	10457	-238677	64,758	20,914	0	0	1153,776	64,758	0	20,914						
	380C1F3 / 3	32379	10453	238677	32379	10453	-238677	64,758	20,906	0	0	975,7506	64,758	0	20,906						
	150C1F1 / 1	8095	2615	59669	8095	2615	-59669	16,19	5,23	0	0	201,904	16,19	0	5,23						
	150C1F2 / 1	8095	2614	59669	8095	2614	-59669	16,19	5,228	0	0	157,368	16,19	0	5,228						
	150C1F3 / 1	8095	2613	59669	8095	2613	-59669	16,19	5,226	0	0	112,866	16,19	0	5,226						
4	Comp. gl	6767	2243	51307	6767	2243	-51307	13,534	4,486	0	0	135,4321	13,534	0	4,486	4	0	3070,834	186,71	0	62,994
Constructioi	GW opgw	3293	1094	25008	3293	1094	-25008	6,586	2,188	0	0	134,9464	6,586	0	2,188	Wind angle: 0 dgr					
Permanent loads yg= 1.:		22212	7511	171693	22212	7511	-171693	44,424	15,022	0	0	946,5145	44,424	0	15,022						
Wind angle:	380C1F2 / 3	22212	7509	171693	22212	7509	-171693	44,424	15,018	0	0	818,6655	44,424	0	15,018						
	380C1F3 / 3	22212	7508	171693	22212	7508	-171693	44,424	15,016	0	0	690,9485	44,424	0	15,016						
	150C1F1 / 1	5553	1878	42923	5553	1878	-42923	11,106	3,756	0	0	146,7501	11,106	0	3,756						
	150C1F2 / 1	5553	1877	42923	5553	1877	-42923	11,106	3,754	0	0	114,7431	11,106	0	3,754						
	150C1F3 / 1	5553	1877	42923	5553	1877	-42923	11,106	3,754	0	0	82,83405	11,106	0	3,754						
6	Comp. gl	5751	1931	44221	5751	1931	-44221	11,502	3,862	0	0	116,3118	11,502	0	3,862	6	0	2881,634	176,204	0	58,916
Permanent,	GW / opgw	2773	932	21353	2773	932	-21353	5,546	1,864	0	0	114,869	5,546	0	1,864	0					
Permanent loads yg= 1.:		21221	7092	162441	21221	7092	-162441	42,442	14,184	0	0	896,0638	42,442	0	14,184						
	380C1F2 / 3	21221	7092	162441	21221	7092	-162441	42,442	14,184	0	0	775,4998	42,442	0	14,184						
	380C1F3 / 3	21221	7092	162441	21221	7092	-162441	42,442	14,184	0	0	654,9358	42,442	0	14,184						
	150C1F1 / 1	5305	1773	40610	5305	1773	-40610	10,61	3,546	0	0	138,1256	10,61	0	3,546						
	150C1F2 / 1	5305	1773	40610	5305	1773	-40610	10,61	3,546	0	0	107,9846	10,61	0	3,546						
	150C1F3 / 1	5305	1773	40610	5305	1773	-40610	10,61	3,546	0	0	77,84362	10,61	0	3,546						
1a	Comp. gl	4981	6913	50148	4981	6913	-50148	9,962	13,826	0	0	357,5253	9,962	0	13,826	1a	0	9378,508	152,33	0	219,866
Wind, 10 dg	GW / opgw	2359	4744	29248	2359	4744	-29248	4,718	9,488	0	0	550,3942	4,718	0	9,488	Wind angle: 45 dgr					
Permanent loads yg= 1.:		18290	28035	192197	18290	28035	-192197	36,58	56,07	0	0	2920,709	36,58	0	56,07						
Wind angle:	380C1F2 / 3	18347	26365	186705	18347	26365	-186705	36,694	52,73	0	0	2309,384	36,694	0	52,73						
	380C1F3 / 3	18422	24221	179939	18422	24221	-179939	36,844	48,442	0	0	1724,674	36,844	0	48,442						
	150C1F1 / 1	4573	7009	48049	4573	7009	-48049	9,146	14,018	0	0	656,1697	9,146	0	14,018						
	150C1F2 / 1	4587	6591	46676	4587	6591	-46676	9,174	13,182	0	0	503,0647	9,174	0	13,182						
	150C1F3 / 1	4606	6055	44985	4606	6055	-44985	9,212	12,11	0	0	356,5861	9,212	0	12,11						
1b	Comp. gl	5171	2981	45544	5171	2981	-45544	10,342	5,962	0	0	165,574	10,342	0	5,962	1b	0	4270,566	158,762	0	94,272
Wind, -20 d	GW / opgw	2489	1726	22530	2489	1726	-22530	4,978	3,452	0	0	205,0073	4,978	0	3,452	Wind angle: 45 dgr					
Permanent loads yg= 1.:		19118	11675	171945	19118	11675	-171945	38,236	23,35	0	0	1325,274	38,236	0	23,35						
Wind angle:	380C1F2 / 3	19125	11345	171617	19125	11345	-171617	38,25	22,69	0	0	1100,135	38,25	0	22,69						
	380C1F3 / 3	19134	10923	171236	19134	10923	-171236	38,268	21,846	0	0	880,3475	38,268	0	21,846						
	150C1F1 / 1	4780	2919	42986	4780	2919	-42986	9,56	5,838	0	0	253,9595	9,56	0	5,838						
	150C1F2 / 1	4781	2836	42904	4781	2836	-42904	9,562	5,672	0	0	197,6068	9,562	0	5,672						
	150C1F3 / 1	4783	2731	42809	4783	2731	-42809	9,566	5,462	0	0	142,6614	9,566	0	5,462						
3	Comp. gl	20178	10195	124390	20178	10195	-124390	40,356	20,39	0	0	575,6664	40,356	0	20,39	3	0	8499,806	302,012	0	190,414
Wind+ice, -	GW / opgw	9963	6316	62972	9963	6316	-62972	19,926	12,632	0	0	752,6835	19,926	0	12,632	Wind angle: 45 dgr					
Permanent loads yg= 1.:		32206	21964	246866	32206	21964	-246866	64,412	43,928	0	0	2457,592	64,412	0	43,928						
Wind angle:	380C1F2 / 3	32229	21069	245667	32229	21069	-245667	64,458	42,138	0	0	2011,927	64,458	0	42,138						
	380C1F3 / 3	32258	19924	244257	32258	19924	-244257	64,516	39,848	0	0	1580,748	64,516	0	39,848						
	150C1F1 / 1	8051	5491	61716	8051	5491	-61716	16,102	10,982	0	0	484,0475	16,102	0	10,982						
	150C1F2 / 1	8057	5267	61417	8057	5267	-61417	16,114	10,534	0	0	372,5162	16,114	0	10,534						
	150C1F3 / 1	8064	4981	61064	8064	4981	-61064	16,128	9,962	0	0	264,6262	16,128	0	9,962						
4	Comp. gl	6761	3220	51609	6761	3220	-51609	13,522	6,44	0	0	183,2825	13,522	0	6,44	4	0	4362,648	186,458	0	94,69
Constructioi	GW opgw	3285	1831	25373	3285	1831	-25373	6,57	3,662	0	0	219,3596	6,57	0	3,662	Wind angle: 45 dgr					
Permanent loads yg= 1.:		22177	11627	173368	22177	11627	-173368	44,354	23,254	0	0	1349,551	44,354	0	23,254						
Wind angle:	380C1F2 / 3	22182	11308	173113	22182	11308	-173113	44,364	22,616	0	0	1126,1	44,364	0	22,616						
	380C1F3 / 3	22188	10900	172815	22188	10900	-172815	44,376	21,8	0	0	907,8091	44,376	0	21,8						
	150C1F1 / 1	5544	2907	43342	5544	2907	-43342	11,088	5,814	0	0	247,6525	11,088	0	5,814						
	150C1F2 / 1	5545	2827	43278	5545	2827	-43278	11,09	5,654	0	0	191,7468	11,09	0	5,654						
	150C1F3 / 1	5547	2725	43204	5547	2725	-43204	11,094	5,45	0	0	137,1463	11,094	0	5,45						
1a	Comp. gl	4858	11309	66072	4858	11309	-66072	9,716	22,618	0	0	572,4654	9,716	0	22,618	1a	0	15110,27	148,564	0	360,808
Wind, 10 dg	GW / opgw	2304	8006	41910	2304	8006	-41910	4,608	16,012	0	0	923,9545	4,608	0	16,012	Wind angle: 90 dgr					
Permanent loads yg= 1.:		17833	46273	258559	17833	46273	-258559	35,666	92,546	0	0	4703,704	35,666	0	92,546						
Wind angle:	380C1F2 / 3	17890	43247	247150	17890	43247	-247150	35,78	86,494	0	0	3672,497	35,78	0	86,494						
	380C1F3 / 3	17973	39351	232576	17973	39351	-232576	35,946	78,702	0	0	2688,74	35,946	0	78,702						
	150C1F1 / 1	4458	11568	64640	4458	11568	-64640	8,916	23,136	0	0	1103,724	8,916	0	23,136						
	150C1F2 / 1	4473	10812	61787	4473	10812	-61787	8,946	21,624	0	0	845,7313	8,946	0	21,624						
	150C1F3 / 1	4493	9838	58144	4493	9838	-58144	8,986	19,676	0	0	599,457	8,986	0	19,676						
1b	Comp. gl	5149	3852	46679	5149	3852	-46679	10,298	7,704	0	0	208,17	10,298	0	7,704	1b	0	5418,977	157,982	0	122,48
Wind, -20 d	GW / opgw	2466	2390	23812	2466	2390	-23812	4,932	4,78	0	0	281,0133	4,932	0	4,78	Wind angle: 90 dgr					
Permanent loads yg= 1.:		19011	15340	177159	19011	15340	-177159	38,022	30,68	0	0	1683,43	38,022	0	30,68						
Wind angle:	380C1F2 / 3	19032	14723	176092	19032	14723	-176092	38,064	29,446	0	0	1372,872	38,064	0	29,446						
	380C1F3 / 3	19058	13935	174834	19058	13935	-174834	38,116	27,87	0	0	1072,395	38,116	0	27,87						
	150C1F1 / 1	4753	3835	44290	4753	3835	-44290	9,506	7,67	0	0	343,9089	9,506	0	7,67						
	150C1F2 / 1	4758	3681	44023	4758	3681	-44023	9,516	7,362	0	0	266,2063	9,516	0	7,362						
	150C1F3 / 1	4764	3484	43708	4764	3484	-43708	9,528	6,968	0	0	190,981	9,528	0	6,968						
3	Comp. gl	20084	14332	128955	20084	14332	-128955	40,168	28,664	0	0	778,0248	40,168	0	28,664	3	0	11847,93	299,506	0	273,02
Wind+ice, -	GW / opgw	9874	9444	67863	9874	9444	-67863	19,748	18,888	0	0	1110,793	19,748	0	18,888	Wind angle: 90 dgr					
Permanent loads yg= 1.:		31881	31881	265134	31881	31881	-265134	63,762	63,762	0	0	3426,379	63,762	0	63,762						
Wind angle:	380C1F2 / 3	31940	30219	261510	31940	30219	-261510	63,88	60,438	0	0	2750,339	63,88	0	60,438						
	380C1F3 / 3	32015	28087	257166	32015	28087	-257166	64,03	56,174	0	0	2100,878	64,03	0	56,174						
	150C1F1 / 1	7970	7970	66284	7970	7970	-66284	15,94	15,94	0	0	727,5335	15,94	0	15,94						
	150C1F2 / 1	7985	7555	65377	7985	7555	-65377	15,97	15,11	0	0	558,3277	15,97	0	15,11						
	150C1F3 / 1	8004	7022	64291	8004	7022	-64291	16,008	14,044	0	0	395,6531	16,008	0	14,044						
4	Comp. gl	6746	4057	52376	6746	4057	-52376	13,492	8,114	0	0	224,2389	13,492	0	8,114	4	0	5472,755	185,898	0	121,944
Constructioi	GW opgw	3270	2467	26251	3270	2467	-26251	6,54	4,934	0	0	292,1811	6,54	0	4,934	Wind angle: 90 dgr					
Permanent loads yg= 1.:		22099	15171	177487	22099	15171	-177487	44,198	30,342	0	0	1696,124	44,198	0	30,342						
Wind angle:	380C1F2 / 3	22114	14575	176638	22114	14575	-176638	44,228	29,15	0	0	1390,083	44,228	0	29,15						
	380C1F3 / 3	22133	13812	175640	22133	13812	-175640	44,266	27,624	0	0	1093,656	44,266	0	27,624						
	150C1F1 / 1	5525	3793	44372	5525	3793	-44372	11,05	7,586	0	0	334,6081	11,05	0	7,586						

	150C1F2 / 15529	3644	44159	5529	3644	-44159	11,058	7,288	0	0	258,0312	11,058	0	7,288										
	150C1F3 / 15533	3453	43910	5533	3453	-43910	11,066	6,906	0	0	183,8324	11,066	0	6,906										
1a	Comp. gl 5011	6067	47521	5011	6067	-47521	10,022	12,134	0	0	316,1845	10,022	0	12,134	1a	0	8273,752	153,282	0	192,696				
Wind, 10 dg	GW / opgw 2377	4111	26910	2377	4111	-26910	4,754	8,222	0	0	477,9251	4,754	0	8,222	Wind angle: -45 dgr									
Permanent loads	yg= 1,18412	24513	180840	18412	24513	-180840	36,824	49,026	0	0	2576,709	36,824	0	49,026										
Wind angle:	380C1F2 / 318462	23111	176582	18462	23111	-176582	36,924	46,222	0	0	2046,9	36,924	0	46,222										
	380C1F3 / 318528	21312	171391	18528	21312	-171391	37,056	42,624	0	0	1539,502	37,056	0	42,624										
	150C1F1 / 14603	6128	45210	4603	6128	-45210	9,206	12,256	0	0	569,6303	9,206	0	12,256										
	150C1F2 / 14616	5778	44145	4616	5778	-44145	9,232	11,556	0	0	437,0169	9,232	0	11,556										
	150C1F3 / 14632	5328	42848	4632	5328	-42848	9,264	10,656	0	0	309,8835	9,264	0	10,656										
1b	Comp. gl 5174	2816	45401	5174	2816	-45401	10,348	5,632	0	0	157,5003	10,348	0	5,632	1b	0	4052,922	158,87	0	88,928				
Wind, -20 dg	GW / opgw 2493	1601	22363	2493	1601	-22363	4,986	3,202	0	0	190,6979	4,986	0	3,202	Wind angle: -45 dgr									
Permanent loads	yg= 1,19133	10981	171285	19133	10981	-171285	38,266	21,962	0	0	1257,404	38,266	0	21,962										
Wind angle:	380C1F2 / 319138	10705	171055	19138	10705	-171055	38,276	21,41	0	0	1048,418	38,276	0	21,41										
	380C1F3 / 319144	10352	170786	19144	10352	-170786	38,288	20,704	0	0	843,8983	38,288	0	20,704										
	150C1F1 / 14783	2745	42821	4783	2745	-42821	9,566	5,49	0	0	236,8874	9,566	0	5,49										
	150C1F2 / 14784	2676	42764	4784	2676	-42764	9,568	5,352	0	0	184,6267	9,568	0	5,352										
	150C1F3 / 14786	2588	42697	4786	2588	-42697	9,572	5,176	0	0	133,4892	9,572	0	5,176										
3	Comp. gl 20190	9409	123811	20190	9409	-123811	40,38	18,818	0	0	537,1977	40,38	0	18,818	3	0	7863,656	302,378	0	174,73				
Wind+ice, -(	GW / opgw 9976	5720	62320	9976	5720	-62320	19,952	11,44	0	0	684,4389	19,952	0	11,44	Wind angle: -45 dgr									
Permanent loads	yg= 1,32254	20080	244441	32254	20080	-244441	64,508	40,16	0	0	2273,414	64,508	0	40,16										
Wind angle:	380C1F2 / 332272	19333	243586	32272	19333	-243586	64,544	38,666	0	0	1871,718	64,544	0	38,666										
	380C1F3 / 332292	18376	242584	32292	18376	-242584	64,584	36,752	0	0	1481,998	64,584	0	36,752										
	150C1F1 / 18064	5020	61110	8064	5020	-61110	16,128	10,04	0	0	437,8022	16,128	0	10,04										
	150C1F2 / 18068	4833	60896	8068	4833	-60896	16,136	9,666	0	0	337,2883	16,136	0	9,666										
	150C1F3 / 18073	4594	60646	8073	4594	-60646	16,146	9,188	0	0	239,7977	16,146	0	9,188										
4	Comp. gl 6762	3061	51515	6762	3061	-51515	13,524	6,122	0	0	175,4953	13,524	0	6,122	4	0	4152,123	186,534	0	89,524				
Constructior	GW opgw 3288	1710	26262	3288	1710	-26262	6,576	3,42	0	0	205,5057	6,576	0	3,42	Wind angle: -45 dgr									
Permanent loads	yg= 1,22187	10956	172854	22187	10956	-172854	44,374	21,912	0	0	1283,888	44,374	0	21,912										
Wind angle:	380C1F2 / 322191	10689	172675	22191	10689	-172675	44,382	21,378	0	0	1076,047	44,382	0	21,378										
	380C1F3 / 322195	10348	172466	22195	10348	-172466	44,39	20,696	0	0	872,5474	44,39	0	20,696										
	150C1F1 / 15547	2739	43213	5547	2739	-43213	11,094	5,478	0	0	231,1683	11,094	0	5,478										
	150C1F2 / 15548	2672	43169	5548	2672	-43169	11,096	5,344	0	0	179,1716	11,096	0	5,344										
	150C1F3 / 15549	2587	43117	5549	2587	-43117	11,098	5,174	0	0	128,3009	11,098	0	5,174										
1a	Comp. gl 3859	1397	31599	3859	1397	-31599	7,718	2,794	0	0	83,00915	7,718	0	2,794	1a	0	2069,334	118,312	0	42,908				
Wind, 10 dg	GW / opgw 1861	678	15226	1861	678	-15226	3,722	1,356	0	0	83,1075	3,722	0	1,356	Wind angle: 0 dgr									
Permanent loads	yg= 0,114250	5174	116855	14250	5174	-116855	28,5	10,348	0	0	642,0565	28,5	0	10,348										
Wind angle:	380C1F2 / 314250	5169	116855	14250	5169	-116855	28,5	10,338	0	0	553,6935	28,5	0	10,338										
	380C1F3 / 314250	5161	116856	14250	5161	-116856	28,5	10,322	0	0	465,3085	28,5	0	10,322										
	150C1F1 / 13562	1293	29214	3562	1293	-29214	7,124	2,586	0	0	102,7916	7,124	0	2,586										
	150C1F2 / 13562	1292	29214	3562	1292	-29214	7,124	2,584	0	0	80,72961	7,124	0	2,584										
	150C1F3 / 13562	1290	29214	3562	1290	-29214	7,124	2,58	0	0	58,63761	7,124	0	2,58										
1b	Comp. gl 3914	1578	36072	3914	1578	-36072	7,828	3,156	0	0	92,08561	7,828	0	3,156	1b	0	2349,110	120,332	0	49,738				
Wind, -20 dg	GW / opgw 1889	770	17575	1889	770	-17575	3,778	1,54	0	0	93,72946	3,778	0	1,54	Wind angle: 0 dgr									
Permanent loads	yg= 0,114497	6007	137241	14497	6007	-137241	28,994	12,014	0	0	726,0306	28,994	0	12,014										
Wind angle:	380C1F2 / 314497	6006	137241	14497	6006	-137241	28,994	12,012	0	0	623,8306	28,994	0	12,012										
	380C1F3 / 314497	6004	137241	14497	6004	-137241	28,994	12,008	0	0	521,6006	28,994	0	12,008										
	150C1F1 / 13624	1502	34310	3624	1502	-34310	7,248	3,004	0	0	122,8572	7,248	0	3,004										
	150C1F2 / 13624	1501	34310	3624	1501	-34310	7,248	3,002	0	0	97,24222	7,248	0	3,002										
	150C1F3 / 13624	1501	34310	3624	1501	-34310	7,248	3,002	0	0	71,72522	7,248	0	3,002										
3	Comp. gl 18993	5122	116923	18993	5122	-116923	37,986	10,244	0	0	322,6196	37,986	0	10,244	3	0	4117,052	265,154	0	85,1				
Wind+ice, -(	GW / opgw 9418	2548	58077	9418	2548	-58077	18,836	5,096	0	0	319,401	18,836	0	5,096	Wind angle: 0 dgr									
Permanent loads	yg= 0,127778	9305	212205	27778	9305	-212205	55,556	18,61	0	0	1175,059	55,556	0	18,61										
Wind angle:	380C1F2 / 327778	9302	212205	27778	9302	-212205	55,556	18,604	0	0	1016,631	55,556	0	18,604										
	380C1F3 / 327778	9298	212205	27778	9298	-212205	55,556	18,596	0	0	858,2408	55,556	0	18,596										
	150C1F1 / 16944	2326	53051	6944	2326	-53051	13,888	4,652	0	0	181,3121	13,888	0	4,652										
	150C1F2 / 16944	2325	53051	6944	2325	-53051	13,888	4,65	0	0	141,6891	13,888	0	4,65										
	150C1F3 / 16944	2324	53051	6944	2324	-53051	13,888	4,648	0	0	102,1001	13,888	0	4,648										
4	Comp. gl 5512	1897	43378	5512	1897	-43378	11,024	3,794	0	0	113,7443	11,024	0	3,794	4	0	2526,398	148,194	0	52,256				
Constructior	GW opgw 2687	926	21162	2687	926	-21162	5,374	1,852	0	0	113,9306	5,374	0	1,852	Wind angle: 0 dgr									
Permanent loads	yg= 0,117573	6216	142035	17573	6216	-142035	35,146	12,432	0	0	775,6546	35,146	0	12,432										
Wind angle:	380C1F2 / 317573	6215	142035	17573	6215	-142035	35,146	12,43	0	0	669,9016	35,146	0	12,43										
	380C1F3 / 317573	6213	142035	17573	6213	-142035	35,146	12,426	0	0	564,1186	35,146	0	12,426										
	150C1F1 / 14393	1554	35509	4393	1554	-35509	8,786	3,108	0	0	122,7886	8,786	0	3,108										
	150C1F2 / 14393	1554	35509	4393	1554	-35509	8,786	3,108	0	0	96,37061	8,786	0	3,108										
	150C1F3 / 14393	1553	35509	4393	1553	-35509	8,786	3,106	0	0	69,88861	8,786	0	3,106										
6	Comp. gl 3859	1380	31600	3859	1380	-31600	7,718	2,76	0	0	82,17615	7,718	0	2,76	6	0	2046,895	118,312	0	42,358				
Permanent,	GW / opgw 1861	665	15226	1861	665	-15226	3,722	1,33	0	0	81,61812	3,722	0	1,33	0									
Permanent loads	yg= 1,114250	5102	116857	14250	5102	-116857	28,5	10,204	0	0	635,0005	28,5	0	10,204										
	380C1F2 / 314250	5102	116857	14250	5102	-116857	28,5	10,204	0	0	548,2665	28,5	0	10,204										
	380C1F3 / 314250	5102	116857	14250	5102	-116857	28,5	10,204	0	0	461,5325	28,5	0	10,204										
	150C1F1 / 13562	1276	29214	3562	1276	-29214	7,124	2,552	0	0	101,1256	7,124	0	2,552										
	150C1F2 / 13562	1276	29214	3562	1276	-29214	7,124	2,552	0	0	79,43161	7,124	0	2,552										
	150C1F3 / 13562	1276	29214	3562	1276	-29214	7,124	2,552	0	0	57,74161	7,124	0	2,552										
1a	Comp. gl 3706	6647	44599	3706	6647	-44599	7,412	13,294	0	0	339,682	7,412	0	13,294	1a	0	8952,218	113,318	0	212,064				
Wind, 10 dg	GW / opgw 1753	4635	27323	1753	4635	-27323	3,506	9,27	0	0	536,1379	3,506	0	9,27	Wind angle: 45 dgr									
Permanent loads	yg= 0,113599	27124	173862	13599	27124	-173862	27,198	54,248	0	0	2786,989	27,198	0	54,248										
Wind angle:	380C1F2 / 313647	25428	167340	13647	25428	-167340	27,294	50,856	0	0	2188,96	27,294	0	50,856										
	380C1F3 / 313714	23248	159166	13714	23248	-159166	27,428	46,496	0	0	1617,798	27,428	0	46,496										
	150C1F1 / 13400	6781	43466	3400	6781	-43466	6,8	13,562	0	0	641,7036	6,8	0	13,562										
	150C1F2 / 13412	6357	41835	3412	6357	-41835	6,824	12,714	0	0	492,002	6,824	0	12,714										
	150C1F3 / 13428	5812	39791	3428	5812	-39791	6,856	11,624	0	0	348,9456	6,856	0	11,624										
1b	Comp. gl 3900	2609	36764	3900	2609	-36764	7,8	5,218	0	0	142,5518	7,8	0	5,218	1b	0	3712,437	119,83	0	83,2				
Wind, -20 dg	GW / opgw 1874	1552	18389	1874	1552	-18389	3,748	3,104	0	0	183,2779	3,748	0	3,104	Wind angle: 45 dgr									
Permanent loads	yg= 0,114427	10354	140467	14427	10354	-140467	28,854	20,708	0	0	1151,373	28,854	0	20,708										
Wind angle:	380C1F2 / 314437	10015	139991	14437	10015	-139991	28,874	20,03	0	0	947,9911	28,874	0	20,03										
	380C1F3 / 314449	9582	139433	14449	9582	-139433	28,898	19,164	0	0	750,1378	28,898	0	19,164										
	150C1F1 / 13607	2589	35117	3607	2589	-35117	7,214	5,178	0	0	229,4974	7,214	0	5,178										
	150C1F2 / 13609	2504	34998	3609	2504	-34998	7,218	5,008	0	0	178,586	7,218	0	5,008										
	150C1F3 / 13612	2395	34858	3612	2395	-34858	7,224	4,79	0	0	129,0218	7,224	0	4,79										
3	Comp. gl 18945	9969	118995	18945	9969	-118995	37,89	19,938	0	0	559,9415	37,89	0	19,938	3	0	8047,302	263,64	0	181,966				
Wind+ice, -(	GW / opgw 9366	6211	60465	9366	6211	-60465	18,732	12,422	0	0	738,9118	18,732	0	12,422	Wind angle: 45 dgr									
Permanent loads	yg= 0,127573	20938	222258	27573	20938	-222258	55,146	41,876	0	0	2313,151	55,146	0	41,876										
Wind angle:	380C1F2 / 327601	20032	220807	27601	20032	-220807	55,202	40,064	0	0	1884,084	55,202	0	40,064										
	380C1F3 / 327634	18872	219095	27634	18872	-219095	55,268	37,744	0	0	1469,613	55,268	0	37,744										
	150C1F1 / 16893	5235	55565	6893	5235	-55565	13,786	10,47	0	0	466,7366	13,786	0	10,47										
	150C1F2 / 16900	5008	55202	6900	5008	-55202	13,8	10,016	0	0	359,3076	13,8	0	10,016										
	150C1F3 / 16908	4718	54774	6908	4718	-54774	13,816	9,436	0	0	255,5579	13,816	0	9,436										
4	Comp. gl 5503	2884	43784	5503	2884	-43784	11,006	5,768	0	0	162,0733	11,006	0	5,768	4	0	3835,813	147,868	0	84,386				
Constructior	GW opgw 2678	1672	21643	2678	1672	-21643	5,356	3,344	0	0	199,3721	5,356	0	3,344	Wind angle: 45 dgr									
Permanent loads	yg= 0,117527	10391	144361	17527	10391	-144361	35,054	20,782	0	0	1184,369	35,054	0	20,782										
Wind angle:	380C1F2 / 317534	10067	144013	17534	10067	-144013	35,068	20,134	0	0	981,5441	35,068	0	20,134										
	380C1F3 / 317542	9651	143605	17542	9651	-143605	35,084	19,302	0	0	783,8569	35,084	0	19,302										
	150C1F1 / 14382	2598	36090	4382	2598	-36090	8,764	5,196	0	0	225,1745	8,764	0	5,196										
	150C1F2 / 14383	2517	36003	4383	2517	-36003	8,766	5,034	0	0	174,4408	8,766	0	5,034										
	150C1F3 / 14385	2413	35901	4385	2413	-35901	8,77	4,826	0	0	124,9823	8,77	0	4,826										
1a	Comp. gl 3610	11100	62695	3610	11100	-62695	7,22	22,2	0	0	557,5169	7,22	0	22,2	1a	0	14754,49	110,428	0	354,704				
Wind, 10 dg	GW / opgw 1715	7924	40888	1715	7924	-40888	3,43	15,848	0	0	912,8412	3,43	0	15,848	Wind angle: 90 dgr									
Permanent loads	yg= 0,113259	45567	247926	13259	45567	-247926	26,518	91,134	0	0	4591,182	26,518	0	91,134										
Wind angle:	380C1F2 / 313297	42514	235608	13297	42514	-235608	26,594	85,028	0	0	3569,61	26,594	0	85,028										
	380C1F3 / 313355	38581	219684	13355	38581	-219684	26,71	77,162	0	0	2595,709	26,71	0	77,162										
	150C1F1 / 13315	11392	61981	3315	11392	-61981	6,63	22,784	0	0	1094,152	6,63	0	22,784										
	150C1F2 / 13324	10629	58902	3324	10629	-58902	6,648	21,258	0	0	838,625	6,648	0	21,258										
	150C1F3 / 13339	9645	54921	3339	9645	-54921	6,678	19,29	0	0	594,8553	6,678	0	19,29										
1b	Comp. gl 3871	3504	38381	3871	3504	-38381	7,742	7,008	0	0	186,2974	7,742	0	7,008	1b	0	4893,083	118,808	0	112,216				
Wind, -20 dg	GW / opgw 1846	2234	20148	1846	2234	-20148	3,692	4,468	0	0	261,3315	3,692	0	4,468	Wind angle: 90 dgr									
Permanent loads	yg= 0,114288	14125	147865	14288	14125	-147865	28,576	28,25	0	0	1519,615	28,576	0	28,25										
Wind angle:	380C1F2 / 314314	13491	146376	14314	13491	-146376	28,628	26,982	0	0	1228,382	28,628	0	26,982										
	380C1F3 / 314347	12680	144605	14347	12680	-144605	28,694	25,36	0	0	947,4435	28,694	0	25,36										
	150C1F1 / 13572	3531	36966	3572	3531	-36966	7,144	7,062	0	0	322,0484	7,144	0	7,062										
	150C1F2 / 13579	3373	36594	3579	3373	-36594	7,158	6,746	0	0	249,1764	7,158	0	6,746										
	150C1F3 / 13587	3170	36151	3587	3170	-36151	7,174	6,34	0	0	178,7897	7,174	0	6,34										
3	Comp. gl 18846	14124	123934	18846	14124	-123934	37,692	28,248	0	0	763,1631	37,692	0	28,248	3	0	11431,58	260,884	0	265,478				
Wind+ice, -(	GW / opgw 9275	9352	65698	9275	9352	-65698	18,55	18,704	0	0	1098,504	18,55	0	18,704	Wind angle: 90 dgr									
Permanent loads	yg= 0,127217	30976	243880	27217	30976	-243880	54,434	61,952	0	0	3293,502	54,434	0	61,952										
Wind angle:	380C1F2 / 327280	29295	239654	27280	29295	-239654	54,56	58,59	0	0	2631,346	54,56	0	58,59										
	380C1F3 / 327360	27139	234551	27360	27139	-234551	54,72	54,278	0	0	1996,105	54,72	0	54,278										
	150C1F1 / 16804	7744	60970	6804	7744	-60970	13,608	15,488	0	0	713,2163	13,608	0	15,488										
	150C1F2 / 16820	7324	59914	6820	7324	-59914	13,64	14,648	0	0	547,4409	13,64	0	14,648										
	150C1F3 / 16840	6785	58638	6840	6785	-58638	13,68	13,57	0	0	388,3026	13,68	0	13,57										
4	Comp. gl 5485	3735	44785	5485	3735	-44785	10,97	7,47	0	0	203,7044	10,97	0	7,47	4	0	4967,298	147,164	0	112,172				
Constructior	GW opgw 2659	2319	22764	2659	2319	-22764	5,318	4,638	0	0	273,4422	5,318	0	4,638	Wind angle: 90 dgr									
Permanent loads	yg= 0,117430	14007	149890	17430	14007	-149890	34,86	28,014	0	0	1537,818	34,86	0	28,014										
Wind angle:	380C1F2 / 317449	13398	148762	17449	13398	-148762	34,898	26,796	0	0	1250,55	34,898	0	26,796										
	380C1F3 / 317472	12620	147430	17472	12620	-147430	34,944	25,24	0	0	973,2097	34,944	0	25,24										
	150C1F1 / 14357	3502	37472	4357	3502	-37472	8,714	7,004	0	0	313,9344	8,714	0	7,004										
	150C1F2 / 14362	3350	37190	4362	3350	-37190	8,724	6,7	0	0	242,0548	8,724	0	6,7										
	150C1F3 / 14368	3155	36857	4368	3155	-36857	8,736	6,31	0	0	172,5845	8,736	0	6,31										
1a	Comp. gl 3733	5786	41388	3733	5786	-41388	7,466	11,572	0	0	297,5949	7,466	0	11,572	1a	0	7828,553	114,17	0	184,43				
Wind, 10 dg	GW / opgw 1766	3994	24677	1766	3994	-24677	3,532	7,988	0	0	462,7378	3,532	0	7,988	Wind angle: -45 dgr									
Permanent loads	yg= 0,113704	23546	160264	13704	23546	-160264	27,408	47,092	0	0	2437,34	27,408	0	47,092										
Wind angle:	380C1F2 / 313751	22118	155043	13751	22118	-155043	27,502	44,236	0	0	1921,835	27,502	0	44,236										
	380C1F3 / 313814	20285	148570	13814	20285	-148570	27,628	40,57	0	0	1429,114	27,628	0	40,57										
	150C1F1 / 13426	5886	40066	3426	5886	-40066	6,852	11,772	0	0	553,819	6,852	0	11,772										
	150C1F2 / 13438	5529	38761	3438	5529	-38761	6,876	11,058	0	0	424,7594	6,876	0	11,058										
	150C1F3 / 13453	5071	37143	3453	5071	-37143	6,906	10,142	0	0	301,3537	6,906	0	10,142										
1b	Comp. gl 3904	2440	36556	3904	2440	-36556	7,808	4,88	0	0	134,2859	7,808	0	4,88	1b	0	3488,937	119,974	0	77,712				
Wind, -20 dg	GW / opgw 1878	1423	18151	1878	1423	-18151	3,756	2,846	0	0	168,5103	3,756	0	2,846	Wind angle: -45 dgr									
Permanent loads	yg= 0,114447	9641	139506	14447	9641	-139506	28,894	19,282	0	0	1081,689	28,894	0	19,282										
Wind angle:	380C1F2 / 314454	9358	139168	14454	9358	-139168	28,908	18,716	0	0	894,9352	28,908	0	18,716										
	380C1F3 / 314462	8996	138773	14462	8996	-138773	28,924	17,992	0	0	712,757	28,924	0	17,992										
	150C1F1 / 13612	2410	34876	3612	2410	-34876	7,224	4,82	0	0	211,9218	7,224	0	4,82										
	150C1F2 / 13614	2339	34792	3614	2339	-34792	7,228	4,678	0	0	165,1874	7,228	0	4,678										
	150C1F3 / 13616	2249	34693	3616	2249	-34693	7,232	4,498	0	0	119,6509	7,232	0	4,498										
3	Comp. gl 18959	9180	118364	18959	9180	-118364	37,918	18,36	0	0	521,3333	37,918	0	18,36	3	0	7404,005	264,06	0	166,102				
Wind+ice, -(	GW / opgw 9381	5613	59760	9381	5613	-59760	18,762	11,226	0	0	670,4439	18,762	0	11,226	Wind angle: -45 dgr									

Permanent loads yg= 0,127629		19030	219318	27629	19030	-219318		55,258	38,06	0		0	2126,697	55,258	0	38,06									
Wind angle:	380C1F2 / 327650	18273	218276	27650	18273	-218276		55,3	36,546	0		0	1742,069	55,3	0	36,546									
	380C1F3 / 327674	17303	217052	27674	17303	-217052		55,348	34,606	0		0	1369,575	55,348	0	34,606									
	150C1F1 / 16907	4758	54830	6907	4758	-54830		13,814	9,516	0		0	419,8966	13,814	0	9,516									
	150C1F2 / 16912	4568	54569	6912	4568	-54569		13,824	9,136	0		0	323,587	13,824	0	9,136									
	150C1F3 / 16918	4326	54263	6918	4326	-54263		13,836	8,652	0		0	230,4027	13,836	0	8,652									
4	Comp. gl 5506	2723	43659	5506	2723	-43659		11,012	5,446	0		0	154,1956	11,012	0	5,446		4	0	3621,78	147,966	0	79,132		
Constructior GW cqgw 2681		1550	21499	2681	1550	-21499		5,362	3,1	0		0	185,4036	5,362	0	3,1		Wind angle: -45 dgr							
Permanent loads yg= 0,117541		9708	143658	17541	9708	-143658		35,082	19,416	0		0	1117,567	35,082	0	19,416									
Wind angle:	380C1F2 / 317545	9437	143412	17545	9437	-143412		35,09	18,874	0		0	930,6183	35,09	0	18,874									
	380C1F3 / 317551	9090	143126	17551	9090	-143126		35,102	18,18	0		0	748,0382	35,102	0	18,18									
	150C1F1 / 14385	2427	35915	4385	2427	-35915		8,77	4,854	0		0	208,3963	8,77	0	4,854									
	150C1F2 / 14386	2359	35853	4386	2359	-35853		8,772	4,718	0		0	161,6226	8,772	0	4,718									
	150C1F3 / 14388	2272	35781	4388	2272	-35781		8,776	4,544	0		0	115,9382	8,776	0	4,544									

W454002+ 15-AA2

Hoogte mast	Ber & bijlage	58	m		
Hoogte onderste stroomdraad (F3)		32	m		
		Hoogte		Excentriciteit ophanging t.o.v. hart mast	
Bliksemdraad = GW / CH_{mast} -	0,716 m =	57,284	m	1,459	m
1e traverse - 380C1F1 F2 +	8,5 m =	49	m	4,737	m
1e traverse - 150C1F1		49		-3,358	m
2e traverse - 380C1F2 F3 +	8,5 m =	40,5	m	4,737	m
2e traverse - 150C1F2 F3 +		40,5	m	-3,358	m
3e traverse - 380C1F3		32	m	4,737	m
3e traverse - 150C1F3		32		-3,358	m
Passieve lijn = Comp C. F3 -	7,5 m =	24,5	m	1,886	m

Uit mast			Uit lijnen					
ULS (incl bel factoren)			SLS					
N	V	M	Nmin	Nmax	Vmax	Mlangs;ma	Mdwars;max	
[kN]	[kN]	[kNm]	[kN]	[kN]	[kN]	[kNm]	[kNm]	
443	102	2857						
443	102	2857	125	230	253	0	10651	

			Belastingen uit lijnen					Belasting uit mast		
			M_{langs}	M_{dwars}	N	V_{langs}	V_{dwars}	N	V	M
SLS	0 deg	1a	0	2254	131	0	47	369	68	1905
		1b	0	2549	133	0	54	369	68	1905
		3	0	3688	230	0	76	369	68	1905
		4	0	2571	151	0	53	369	68	1905
	45 deg	1a	0	6771	128	0	158	369	68	1905
		1b	0	3443	133	0	76	369	68	1905
		3	0	6312	229	0	141	369	68	1905
		4	0	3437	151	0	74	369	68	1905
	90 deg	1a	0	10651	125	0	253	369	68	1905
		1b	0	4213	133	0	95	369	68	1905
		3	0	8575	227	0	197	369	68	1905
		4	0	4180	151	0	93	369	68	1905
	-45 deg	1a	0	6027	129	0	139	369	68	1905
		1b	0	3298	133	0	72	369	68	1905
		3	0	5883	229	0	131	369	68	1905
		4	0	3296	151	0	71	369	68	1905

regel			Loadcase	Totaal M_{langs}	M_{dwars}	N	V_{langs}	V_{dwars}	Totaal moment	M langs max	M dwars ma	N max	V langs max	V dwars ma	M tot max	N min
1	Perm load 1,2	0 deg	1a	1905	4159	500	68	115	4574,015	1 x			x			
2	Perm load 1,2	0 deg	1b	1905	4453	502	68	122	4843,515	2 x			x			
3	Perm load 1,2	0 deg	3	1905	5592	599	68	144	5907,939	3 x		x	x			
4	Perm load 1,2	0 deg	4	1905	4475	520	68	121	4863,684	4 x			x			
5										5						
6	Perm load 1,2	45 deg	1a	1905	8676	497	68	226	8882,282	6 x			x			
7	Perm load 1,2	45 deg	1b	1905	5348	502	68	144	5677,085	7 x			x			
8	Perm load 1,2	45 deg	3	1905	8217	598	68	209	8434,954	8 x			x			
9	Perm load 1,2	45 deg	4	1905	5342	520	68	142	5671,001	9 x			x			
10										10						
11	Perm load 1,2	90 deg	1a	1905	12556	494	68	321	12699,62	11 x	x		x	x	x	x
12	Perm load 1,2	90 deg	1b	1905	6118	502	68	163	6407,279	12 x			x			
13	Perm load 1,2	90 deg	3	1905	10479	596	68	265	10651,17	13 x			x			
14	Perm load 1,2	90 deg	4 Construct	1905	6085	520	68	161	6376,119	14 x			x			
15										15						
16	Perm load 1,2	-45 deg	1a	1347	7932	498	68	207	8045,281	16			x			
17	Perm load 1,2	-45 deg	1b	1347	5202	502	68	140	5373,763	17			x			
18	Perm load 1,2	-45 deg	3	1347	7788	598	68	199	7903,376	18			x			
19	Perm load 1,2	-45 deg	4	1347	5201	520	68	139	5372,228	19			x			
				1905	12556	599	68	321	12700							
						494										

samenvatting

	Mast	Bijlage	Wind	Loadcase	M_{langs}	M_{dwars}	N	V_{langs}	V_{dwars}
3	W454002+15-AA2	Perm load :0 deg		3	1905	5592	599	68	144
11	W454002+15-AA2	Perm load :90 deg		1a	1905	12556	494	68	321
	W454002+15-AA2	#N/B	#N/B	#N/B	#N/B	#N/B	#N/B	#N/B	#N/B
	W454002+15-AA2	#N/B	#N/B	#N/B	#N/B	#N/B	#N/B	#N/B	#N/B
	W454002+15-AA2	#N/B	#N/B	#N/B	#N/B	#N/B	#N/B	#N/B	#N/B
	W454002+15-AA2	#N/B	#N/B	#N/B	#N/B	#N/B	#N/B	#N/B	#N/B

W4S400Z+5 TOWER APPENDIX: AA2

Loadcases for tower strength (ultimate limit state)

Loadcase according to

60943-3-15			**AHEAD**			**BACK**		
	Attachment pos	[N]	[N]	[N]	[N]	[N]	[N]	[N]
1a	Comp. gl	4281	1519	34520	4281	1519	-34520	
Wind, 10 dgr	GW / opgw	2064	735	16643	2064	735	-16643	
Permanent loads	ygr= 1.0:	15804	5612	127432	15804	5612	-127432	
Wind angle:	380C1F2/ 3:	15804	5608	127432	15804	5608	-127432	
	380C1F3/ 3:	15804	5603	127432	15804	5603	-127432	
	150C1F1/ 1:	13951	1403	31858	3951	1403	-31858	
	150C1F2/ 1:	13951	1402	31858	3951	1402	-31858	
	150C1F3/ 1:	13951	1401	31858	3951	1401	-31858	
1b	Comp. gl	4337	1712	39161	4337	1712	-39161	
Wind, -20 dg	GW / opgw	2094	835	19082	2094	835	-19082	
Permanent loads	ygr= 1.0:	16058	6490	148420	16058	6490	-148420	
Wind angle:	380C1F2/ 3:	16058	6489	148420	16058	6489	-148420	
	380C1F3/ 3:	16058	6488	148420	16058	6488	-148420	
	150C1F1/ 1:	14015	1623	37105	4015	1623	-37105	
	150C1F2/ 1:	14015	1622	37105	4015	1622	-37105	
	150C1F3/ 1:	14015	1622	37105	4015	1622	-37105	
3	Comp. gl	14411	4161	95055	14411	4161	-95055	
Wind+ice, -5	GW / opgw	7123	2064	47087	7123	2064	-47087	
Permanent loads	ygr= 1.0:	24868	8531	194794	24868	8531	-194794	
Wind angle:	380C1F2/ 3:	24868	8529	194794	24868	8529	-194794	
	380C1F3/ 3:	24868	8527	194794	24868	8527	-194794	
	150C1F1/ 1:	16217	2133	48698	6217	2133	-48698	
	150C1F2/ 1:	16217	2132	48698	6217	2132	-48698	
	150C1F3/ 1:	16217	2132	48698	6217	2132	-48698	
4	Comp. gl	5385	1860	42552	5385	1860	-42552	
Construction	GW opgw	2616	905	20697	2616	905	-20697	
Permanent loads	ygr= 1.0:	18030	6342	145038	18030	6342	-145038	
Wind angle:	380C1F2/ 3:	18030	6341	145038	18030	6341	-145038	
	380C1F3/ 3:	18030	6340	145038	18030	6340	-145038	
	150C1F1/ 1:	14507	1586	36260	4507	1586	-36260	
	150C1F2/ 1:	14507	1585	36260	4507	1585	-36260	
	150C1F3/ 1:	14507	1585	36260	4507	1585	-36260	
1a	Comp. gl	4193	4957	40431	4193	4957	-40431	
Wind, 10 dgr	GW / opgw	1989	3341	22741	1989	3341	-22741	
Permanent loads	ygr= 1.0:	15410	20023	154097	15410	20023	-154097	
Wind angle:	380C1F2/ 3:	15452	18896	150625	15452	18896	-150625	
	380C1F3/ 3:	15505	17453	146405	15505	17453	-146405	
	150C1F1/ 1:	13853	5006	38524	3853	5006	-38524	
	150C1F2/ 1:	13863	4724	37656	3863	4724	-37656	
	150C1F3/ 1:	13876	4363	36601	3876	4363	-36601	
1b	Comp. gl	4332	2389	39420	4332	2389	-39420	
Wind, -20 dg	GW / opgw	2087	1347	19397	2087	1347	-19397	
Permanent loads	ygr= 1.0:	16030	9341	149636	16030	9341	-149636	
Wind angle:	380C1F2/ 3:	16034	9120	149451	16034	9120	-149451	
	380C1F3/ 3:	16039	8837	149235	16039	8837	-149235	
	150C1F1/ 1:	14007	2335	37409	4007	2335	-37409	
	150C1F2/ 1:	14008	2280	37363	4008	2280	-37363	
	150C1F3/ 1:	14010	2209	37309	4010	2209	-37309	
3	Comp. gl	14380	7426	96390	14380	7426	-96390	
Wind+ice, -5	GW / opgw	7090	4533	48641	7090	4533	-48641	
Permanent loads	ygr= 1.0:	24759	16283	200001	24759	16283	-200001	
Wind angle:	380C1F2/ 3:	24774	15680	199233	24774	15680	-199233	
	380C1F3/ 3:	24792	14908	198331	24792	14908	-198331	
	150C1F1/ 1:	6190	4071	50000	6190	4071	-50000	
	150C1F2/ 1:	6194	3920	49808	6194	3920	-49808	
	150C1F3/ 1:	6198	3727	49583	6198	3727	-49583	
4	Comp. gl	5381	2515	42730	5381	2515	-42730	
Construction	GW opgw	2612	1399	20915	2612	1399	-20915	
Permanent loads	ygr= 1.0:	18010	9102	146005	18010	9102	-146005	
Wind angle:	380C1F2/ 3:	18012	8889	145856	18012	8889	-145856	
	380C1F3/ 3:	18016	8615	145683	18016	8615	-145683	
	150C1F1/ 1:	4502	2276	36501	4502	2276	-36501	
	150C1F2/ 1:	4503	2222	36464	4503	2222	-36464	
	150C1F3/ 1:	4504	2154	36421	4504	2154	-36421	
1a	Comp. gl	4095	7929	50856	4095	7929	-50856	
Wind, 10 dgr	GW / opgw	1938	5558	31528	1938	5558	-31528	
Permanent loads	ygr= 1.0:	15028	32383	198484	15028	32383	-198484	
Wind angle:	380C1F2/ 3:	15080	30327	190602	15080	30327	-190602	
	380C1F3/ 3:	15154	27682	180662	15154	27682	-180662	
	150C1F1/ 1:	3757	8096	49621	3757	8096	-49621	
	150C1F2/ 1:	3770	7582	47650	3770	7582	-47650	
	150C1F3/ 1:	3788	6920	45165	3788	6920	-45165	
1b	Comp. gl	4319	2971	40066	4319	2971	-40066	
Wind, -20 dg	GW / opgw	2073	1791	20141	2073	1791	-20141	
Permanent loads	ygr= 1.0:	15967	11797	152623	15967	11797	-152623	
Wind angle:	380C1F2/ 3:	15980	11384	152007	15980	11384	-152007	
	380C1F3/ 3:	15995	10855	151283	15995	10855	-151283	
	150C1F1/ 1:	3992	2949	38156	3992	2949	-38156	
	150C1F2/ 1:	3995	2846	38002	3995	2846	-38002	
	150C1F3/ 1:	3999	2714	37821	3999	2714	-37821	
3	Comp. gl	14316	10228	99620	14316	10228	-99620	
Wind+ice, -5	GW / opgw	7027	6655	52133	7027	6655	-52133	
Permanent loads	ygr= 1.0:	24544	22983	211899	24544	22983	-211899	
Wind angle:	380C1F2/ 3:	24584	21857	209512	24584	21857	-209512	
	380C1F3/ 3:	24634	20416	206669	24634	20416	-206669	
	150C1F1/ 1:	6136	5746	52975	6136	5746	-52975	
	150C1F2/ 1:	6146	5464	52378	6146	5464	-52378	
	150C1F3/ 1:	6159	5104	51667	6159	5104	-51667	
4	Comp. gl	5372	3076	43190	5372	3076	-43190	
Construction	GW opgw	2603	1825	21446	2603	1825	-21446	
Permanent loads	ygr= 1.0:	17964	11475	148428	17964	11475	-148428	
Wind angle:	380C1F2/ 3:	17973	11076	147926	17973	11076	-147926	
	380C1F3/ 3:	17984	10565	147337	17984	10565	-147337	
	150C1F1/ 1:	4491	2869	37107	4491	2869	-37107	
	150C1F2/ 1:	4493	2769	36981	4493	2769	-36981	
	150C1F3/ 1:	4496	2641	36834	4496	2641	-36834	
1a	Comp. gl	4214	4389	38815	4214	4389	-38815	
Wind, 10 dgr	GW / opgw	2003	2913	21209	2003	2913	-21209	
Permanent loads	ygr= 1.0:	15498	17649	146963	15498	17649	-146963	
Wind angle:	380C1F2/ 3:	15533	16706	144336	15533	16706	-144336	
	380C1F3/ 3:	15578	15498	141173	15578	15498	-141173	
	150C1F1/ 1:	3875	4412	36741	3875	4412	-36741	
	150C1F2/ 1:	3883	4176	36084	3883	4176	-36084	
	150C1F3/ 1:	3894	3874	35293	3894	3874	-35293	
1b	Comp. gl	4333	2278	39340	4333	2278	-39340	
Wind, -20 dg	GW / opgw	2089	1263	19302	2089	1263	-19302	

		Totaal Vert [kN]	Dwars [kN]	Langs [kN]
1a		8,562	3,038	0
		4,128	1,47	0
		31,608	11,224	0
		31,608	11,216	0
		31,608	11,206	0
		7,902	2,806	0
		7,902	2,804	0
		7,902	2,802	0
1b		8,674	3,424	0
		4,188	1,67	0
		32,116	12,98	0
		32,116	12,978	0
		32,116	12,976	0
		8,03	3,246	0
		8,03	3,244	0
		8,03	3,244	0
3		28,822	8,322	0
		14,246	4,128	0
		49,736	17,062	0
		49,736	17,058	0
		49,736	17,054	0
		12,434	4,266	0
		12,434	4,264	0
		12,434	4,264	0
4		10,77	3,72	0
		5,232	1,81	0
		36,06	12,684	0
		36,06	12,682	0
		36,06	12,68	0
		9,014	3,172	0
		9,014	3,17	0
		9,014	3,17	0
1a		8,386	9,914	0
		3,978	6,682	0
		30,82	40,046	0
		30,904	37,792	0
		31,01	34,906	0
		7,706	10,012	0
		7,726	9,448	0
		7,752	8,726	0
1b		8,664	4,778	0
		4,174	2,694	0
		32,06	18,682	0
		32,068	18,24	0
		32,078	17,674	0
		8,014	4,67	0
		8,016	4,56	0
		8,02	4,418	0
3		28,76	14,852	0
		14,18	9,066	0
		49,518	32,566	0
		49,548	31,36	0
		49,584	29,816	0
		12,38	8,142	0
		12,388	7,84	0
		12,396	7,454	0
4		10,762	5,03	0
		5,224	2,798	0
		36,02	18,204	0
		36,024	17,778	0
		36,032	17,23	0
		9,004	4,552	0
		9,006	4,444	0
		9,008	4,308	0
1a		8,19	15,858	0
		3,876	11,116	0
		30,056	64,766	0
		30,16	60,654	0
		30,308	55,364	0
		7,514	16,192	0
		7,54	15,164	0
		7,576	13,84	0
1b		8,638	5,942	0
		4,146	3,582	0
		31,934	23,594	0
		31,96	22,768	0
		31,99	21,71	0
		7,984	5,898	0
		7,99	5,692	0
		7,998	5,428	0
3		28,632	20,456	0
		14,054	13,31	0
		49,088	45,966	0
		49,168	43,714	0
		49,268	40,832	0
		12,272	11,492	0
		12,292	10,928	0
		12,318	10,208	0
4		10,744	6,152	0
		5,206	3,65	0
		35,928	22,95	0
		35,946	22,152	0
		35,968	21,13	0
		8,982	5,738	0
		8,986	5,538	0
		8,992	5,282	0
1a		8,428	8,778	0
		4,006	5,826	0
		30,996	35,298	0
		31,066	33,412	0
		31,156	30,996	0
		7,75	8,824	0
		7,766	8,352	0
		7,788	7,748	0
1b		8,666	4,556	0
		4,178	2,526	0

		Belastingen op mastvoet, per lijn M_{langs}	M_{dwars}	N	V_{langs}	V_{dwars}
1a		0	90,57893	8,562	0	3,038
		0	90,23023	4,128	0	1,47
		0	699,7031	31,608	0	11,224
		0	603,9751	31,608	0	11,216
		0	508,3191	31,608	0	11,206
		0	110,9591	7,902	0	2,806
		0	87,02708	7,902	0	2,804
		0	63,12908	7,902	0	2,802
1b		0	100,2472	8,674	0	3,424
		0	101,7746	4,188	0	1,67
		0	788,1535	32,116	0	12,98
		0	677,7425	32,116	0	12,978
		0	567,3655	32,116	0	12,976
		0	132,0893	8,03	0	3,246
		0	104,4173	8,03	0	3,244
		0	76,84326	8,03	0	3,244
3		0	258,2473	28,822	0	8,322
		0	257,2533	14,246	0	4,128
		0	1071,637	49,736	0	17,062
		0	926,4484	49,736	0	17,058
		0	781,3274	49,736	0	17,054
		0	167,2806	12,434	0	4,266
		0	130,9386	12,434	0	4,264
		0	94,69463	12,434	0	4,264
4		0	111,4522	10,77	0	3,72
		0	111,3175	5,232	0	1,81
		0	792,3322	36,06	0	12,684
		0	684,4372	36,06	0	12,682
		0	576,5762	36,06	0	12,68
		0	125,159	9,014	0	3,172
		0	98,11599	9,014	0	3,17
		0	71,17099	9,014	0	3,17
1a		0	258,709	8,386	0	9,914
		0	388,5756	3,978	0	6,682
		0	2108,248	30,82	0	40,046
		0	1676,968	30,904	0	37,792
		0	1263,886	31,01	0	34,906
		0	464,7113	7,706	0	10,012
		0	356,7001	7,726	0	9,448
		0	253,2008	7,752	0	8,726
1b		0	133,4013	8,664	0	4,778
		0	160,413	4,174	0	2,694
		0	1067,286	32,06	0	18,682
		0	890,6261	32,068	0	18,24
		0	717,5215	32,078	0	17,674
		0	201,919	8,014	0	4,67
		0	157,7623	8,016	0	4,56
		0	114,4448	8,02	0	4,418
3		0	418,1154	28,76	0	14,852
		0	540,0254	14,18	0	9,066
		0	1830,301	49,518	0	32,566
		0	1504,789	49,548	0	31,36
		0	1188,991	49,584	0	29,816
		0	357,386	12,38	0	8,142
		0	275,9211	12,388	0	7,84
		0	196,9022	12,396	0	7,454
4		0	143,5321	10,762	0	5,03
		0	167,9024	5,224	0	2,798
		0	1062,623	36,02	0	18,204
		0	890,6547	36,024	0	17,778
		0	722,0436	36,032	0	17,23
		0	192,8126	9,004	0	4,552
		0	149,7399	9,006	0	4,444
		0	107,6071	9,008	0	4,308
1a		0	403,9671	8,19	0	15,858
		0	642,424	3,876	0	11,116
		0	3315,909	30,056	0	64,766
		0	2599,355	30,16	0	60,654
		0	1915,217	30,308	0	55,364
		0	768,176	7,514	0	16,192
		0	588,8227	7,54	0	15,164
		0	417,4398	7,576	0	13,84
1b		0	161,8703	8,638	0	5,942
		0	211,2403	4,146	0	3,582
		0	1307,377	31,934	0	23,594
		0	1073,499	31,96	0	22,768
		0	846,2566	31,99	0	21,71
		0	262,1917	7,984	0	5,898
		0	203,6956	7,99	0	5,692
		0	146,8387	7,998	0	5,428
3		0	555,172	28,632	0	20,456
		0	782,9548	14,054	0	13,31
		0	2484,864	49,088	0	45,966
		0	2003,326	49,168	0	43,714
		0	1540,007	49,268	0	40,832
		0	521,8986	12,272	0	11,492
		0	401,3075	12,292	0	10,928
		0	285,2922	12,318	0	10,208
4		0	170,9872	10,744	0	6,152
		0	216,6822	5,206	0	3,65
		0	1294,741	35,928	0	22,95
		0	1067,432	35,946	0	22,152
		0	846,5404	35,968	0	21,13
		0	251,0004	8,982	0	5,738
		0	194,114	8,986	0	5,538
		0	138,8289	8,992	0	5,282
1a		0	230,9562	8,428	0	8,778
		0	339,5813	4,006	0	5,826
		0	1876,43	30,996	0	35,298
		0	1500,346	31,066	0	33,412
		0	1139,458	31,156	0	30,996
		0	406,3515	7,75	0	8,824
		0	312,1778	7,766	0	8,352
		0	221,7839	7,788	0	7,748
1b		0	127,9661	8,666	0	4,556
		0	150,7951	4,178	0	2,526

		Belasting op mastvoet, belastinggeval M_{langs}	M_{dwars}	N	V_{langs}	V_{dwars}
1a		0	2253,922	131,22	0	46,566
Wind angle: 0 dgr						
1b		0	2548,633	133,3	0	53,762
Wind angle: 0 dgr						
3		0	3687,828	229,578	0	76,418
Wind angle: 0 dgr						
4		0	2570,561	151,224	0	53,088
Wind angle: 0 dgr						
1a		0	6771	128,282	0	157,526
Wind angle: 45 dgr						
1b		0	3443,374	133,094	0	75,716
Wind angle: 45 dgr						
3		0	6312,431	228,754	0	141,096
Wind angle: 45 dgr						
4		0	3436,915	151,08	0	74,344
Wind angle: 45 dgr						
1a		0	10651,31	125,22	0	252,954
Wind angle: 90 dgr						
1b		0	4212,969	132,64	0	94,614
Wind angle: 90 dgr						
3		0	8574,821	227,092	0	196,906
Wind angle: 90 dgr						
4		0	4180,326	150,752	0	92,592
Wind angle: 90 dgr						
1a		0	6027,084	128,956	0	139,234
Wind angle: -45 dgr						
1b		0	3297,588	133,152	0	72,138
Wind angle: -45 dgr						

Permanent loads yg= 1.0		16038	8876	149263	16038	8876	-149263
Wind angle:	380C1F2 / 3	16041	8691	149133	16041	8691	-149133
	380C1F3 / 3	16044	8455	148982	16044	8455	-148982
	150C1F1 / 1	4010	2219	37316	4010	2219	-37316
	150C1F2 / 1	4010	2173	37283	4010	2173	-37283
	150C1F3 / 1	4011	2114	37246	4011	2114	-37246
3	Comp. gl	14389	6894	95982	14389	6894	-95982
Wind+ice, -5	GW / opgw	7099	4129	48179	7099	4129	-48179
Permanent loads yg= 1.0		24790	15013	198449	24790	15013	-198449
Wind angle:	380C1F2 / 3	24801	14509	197903	24801	14509	-197903
0	380C1F3 / 3	24814	13865	197265	24814	13865	-197265
	150C1F1 / 1	6197	3753	49612	6197	3753	-49612
	150C1F2 / 1	6200	3627	49476	6200	3627	-49476
	150C1F3 / 1	6203	3466	49316	6203	3466	-49316
4	Comp. gl	5382	2409	42674	5382	2409	-42674
Construction	GW opgw	2613	1319	20848	2613	1319	-20848
Permanent loads yg= 1.0		18015	8653	145705	18015	8653	-145705
Wind angle:	380C1F2 / 3	18017	8474	145601	18017	8474	-145601
	380C1F3 / 3	18020	8245	145480	18020	8245	-145480
	150C1F1 / 1	4504	2163	36426	4504	2163	-36426
	150C1F2 / 1	4504	2119	36400	4504	2119	-36400
	150C1F3 / 1	4505	2061	36370	4505	2061	-36370

32,076	17,752	0	0	1021,792	32,076	0	17,752						
32,082	17,382	0	0	855,9434	32,082	0	17,382						
32,088	16,91	0	0	693,1209	32,088	0	16,91						
8,02	4,438	0	0	190,5308	8,02	0	4,438						
8,02	4,346	0	0	149,0818	8,02	0	4,346						
8,022	4,228	0	0	108,3581	8,022	0	4,228						
28,778	13,788	0	0	392,0813	28,778	0	13,788	3	0	5883,111	228,986	0	130,512
14,198	8,258	0	0	493,7662	14,198	0	8,258	Wind angle: -45 dgr					
49,58	30,026	0	0	1706,134	49,58	0	30,026						
49,602	29,018	0	0	1410,194	49,602	0	29,018						
49,628	27,73	0	0	1122,448	49,628	0	27,73						
12,394	7,506	0	0	326,1749	12,394	0	7,506						
12,4	7,254	0	0	252,1478	12,4	0	7,254						
12,406	6,932	0	0	180,1647	12,406	0	6,932						
10,764	4,818	0	0	138,3419	10,764	0	4,818	4	0	3296,002	151,12	0	70,886
5,226	2,638	0	0	158,7399	5,226	0	2,638	Wind angle: -45 dgr					
36,03	17,306	0	0	1018,668	36,03	0	17,306						
36,034	16,948	0	0	857,0871	36,034	0	16,948						
36,04	16,49	0	0	698,4015	36,04	0	16,49						
9,008	4,326	0	0	181,7251	9,008	0	4,326						
9,008	4,238	0	0	141,3901	9,008	0	4,238						
9,01	4,122	0	0	101,6484	9,01	0	4,122						
0	0	0	0	0	0	0	0	0	0	0	0	0	0
0	0	0	0	0	0	0	0	0					
0	0	0	0	0	0	0	0						
0	0	0	0	0	0	0	0						
0	0	0	0	0	0	0	0						
0	0	0	0	0	0	0	0						
0	0	0	0	0	0	0	0						
0	0	0	0	0	0	0	0						
0	0	0	0	0	0	0	0	0	0	0	0	0	0
0	0	0	0	0	0	0	0	0					
0	0	0	0	0	0	0	0						
0	0	0	0	0	0	0	0						
0	0	0	0	0	0	0	0						
0	0	0	0	0	0	0	0						
0	0	0	0	0	0	0	0						
0	0	0	0	0	0	0	0						
0	0	0	0	0	0	0	0	0	0	0	0	0	0
0	0	0	0	0	0	0	0	0					
0	0	0	0	0	0	0	0						
0	0	0	0	0	0	0	0						
0	0	0	0	0	0	0	0						
0	0	0	0	0	0	0	0						
0	0	0	0	0	0	0	0						
0	0	0	0	0	0	0	0						
0	0	0	0	0	0	0	0	0	0	0	0	0	0
0	0	0	0	0	0	0	0	0					
0	0	0	0	0	0	0	0						
0	0	0	0	0	0	0	0						
0	0	0	0	0	0	0	0						
0	0	0	0	0	0	0	0						
0	0	0	0	0	0	0	0						
0	0	0	0	0	0	0	0						
0	0	0	0	0	0	0	0	0	0	0	0	0	0
0	0	0	0	0	0	0	0	0					
0	0	0	0	0	0	0	0						
0	0	0	0	0	0	0	0						
0	0	0	0	0	0	0	0						
0	0	0	0	0	0	0	0						
0	0	0	0	0	0	0	0						
0	0	0	0	0	0	0	0						
0	0	0	0	0	0	0	0	0	0	0	0	0	0
0	0	0	0	0	0	0	0	0					
0	0	0	0	0	0	0	0						
0	0	0	0	0	0	0	0						
0	0	0	0	0	0	0	0						
0	0	0	0	0	0	0	0						
0	0	0	0	0	0	0	0						
0	0	0	0	0	0	0	0						
0	0	0	0	0	0	0	0	0	0	0	0	0	0
0	0	0	0	0	0	0	0	0					
0	0	0	0	0	0	0	0						
0	0	0	0	0	0	0	0						
0	0	0	0	0	0	0	0						
0	0	0	0	0	0	0	0						
0	0	0	0	0	0	0	0						
0	0	0	0	0	0	0	0						
0	0	0	0	0	0	0	0	0	0	0	0	0	0
0	0	0	0	0	0	0	0	0					
0	0	0	0	0	0	0	0						
0	0	0	0	0	0	0	0						
0	0	0	0	0	0	0	0						
0	0	0	0	0	0	0	0						
0	0	0	0	0	0	0	0						
0	0	0	0	0	0	0	0						
0	0	0	0	0	0	0	0	0	0	0	0	0	0
0	0	0	0	0	0	0	0	0					
0	0	0	0	0	0	0	0						
0	0	0	0	0	0	0	0						
0	0	0	0	0	0	0	0						
0	0	0	0	0	0	0	0						
0	0	0	0	0	0	0	0						
0	0	0	0	0	0	0	0						
0	0	0	0	0	0	0	0	0	0	0	0	0	0
0	0	0	0	0	0	0	0	0					
0	0	0	0	0	0	0	0						
0	0	0	0	0	0	0	0						
0	0	0	0	0	0	0	0						
0	0	0	0	0	0	0	0						
0	0	0	0	0	0	0	0						
0	0	0	0	0	0	0	0						
0	0	0	0	0	0	0	0	0	0	0	0	0	0
0	0	0	0	0	0	0	0	0					
0	0	0	0	0	0	0	0						
0	0	0	0	0	0	0	0						
0	0	0	0	0	0	0	0						
0	0	0	0	0	0	0	0						
0	0	0	0	0	0	0	0						
0	0	0	0	0	0	0	0						
0	0	0	0	0	0	0	0	0	0	0	0	0	0
0	0	0	0	0	0	0	0	0					
0	0	0	0	0	0	0	0						
0	0	0	0	0	0	0	0						
0	0	0	0	0	0	0	0						
0	0	0	0	0	0	0	0						
0	0	0	0	0	0	0	0						
0	0	0	0	0	0	0	0						
0	0	0	0	0	0	0	0	0	0	0	0	0	0
0	0	0	0	0	0	0	0	0					
0	0	0	0	0	0	0	0						
0	0	0	0	0	0	0	0						
0	0	0	0	0	0	0	0						
0	0	0	0	0	0	0	0						
0	0	0	0	0	0	0	0						
0	0	0	0	0	0	0	0						
0	0	0	0	0	0	0	0	0	0	0	0	0	0
0	0	0	0	0	0	0	0	0					
0	0	0	0	0	0	0	0						
0	0	0	0	0	0	0	0						
0	0	0	0	0	0	0	0						
0	0	0	0	0	0	0	0						
0	0	0	0	0	0	0	0						
0	0	0	0	0	0	0	0						
0	0	0	0	0	0	0	0	0	0	0	0	0	0
0	0	0	0	0	0	0	0	0					
0	0	0	0	0	0	0	0						
0	0	0	0	0	0	0	0						
0	0	0	0	0	0	0	0						
0	0	0	0	0	0	0	0						
0	0	0	0	0	0	0	0						
0	0	0	0	0	0	0	0						
0	0	0	0	0	0	0	0	0	0	0	0	0	0
0	0	0	0	0	0	0	0	0					
0	0	0	0	0	0	0	0						
0	0	0	0	0	0	0	0						
0	0	0	0	0	0	0	0						
0	0	0	0	0	0	0	0						
0	0	0	0	0	0	0	0						
0	0	0	0	0	0	0	0						
0	0	0	0	0	0	0	0	0	0	0	0	0	0
0	0	0	0	0	0	0	0	0					
0	0	0	0	0	0	0	0						
0	0	0	0	0	0	0	0						
0	0	0	0	0	0	0	0						
0	0	0	0	0	0	0	0						
0	0	0	0	0	0	0	0						
0	0	0	0	0	0	0	0						
0	0	0	0	0	0	0	0	0	0	0	0	0	0
0	0	0	0	0	0	0	0	0					
0	0	0	0	0	0	0	0						

W2H400+1 17-O

Hoogte mast	Ber & bijlage		67	m		
Hoogte onderste stroomdraad (F3)			37	m		
			Hoogte		Excentriciteit ophanging t.o.v. hart mast	
Bliksemdraad = GW / (H_{mast} -	0,57	m =	66,43	m	0,759	m
1e traverse - 380C1F1 F2 +	10	m =	57	m	0	m
2e traverse - 380C1F2 F3 +	10	m =	47	m	0	m
3e traverse - 380C1F3			37	m	0	m
Passieve lijn = Comp C F3 -	7,5	m =	29,5	m	2,075	m

Uit mast			Uit lijnen				
(excl belastingsfactoren)			(incl belastingsfactoren)				
N	V	M	Nmin	Nmax	Vmax	Mlangs;max	Mdwars;max
[kN]	[kN]	[kNm]	[kN]	[kN]	[kN]	[kNm]	[kNm]
1003	148	4621	95	277	948	14248	43878
1003	148	4621	101	173	696	5453	32379
1003	148	4621	95	277	948	14248	43878

			Belastingen uit lijnen					Belasting uit mast		
			M_{langs}	M_{dwars}	N	V_{langs}	V_{dwars}	N	V	M
Perm load 1,2	0 deg	1a	0	23601	140	0	507	1003	148	4621
		1b	0	24290	145	0	523	1003	28	866
		3	0	38231	**277**	0	829	1003	42	1300
		4	0	24873	168	0	536	1003	28	866
		6	0	22922	158	0	494			
	45 deg	1a	-11696	32109	134	-245	686	1003	148	4621
		1b	-542	25215	144	-11	542	1003	28	866
		3	-2161	41307	275	-44	894	1003	42	1300
		4	-342	25706	168	-7	554	1003	28	866
	90 deg	1a	0	39304	129	0	837	1003	148	4621
		1b	0	25993	144	0	559	1003	28	866
		3	0	**43878**	273	0	**948**	1003	42	1300
		4	0	26424	167	0	569	1003	28	866
	-45 deg	1a	11696	32109	134	245	686	1003	148	4621
		1b	542	25215	144	11	542	1003	28	866
		3	2161	41307	275	44	894	1003	42	1300
		4	342	25706	168	7	554	1003	28	866
Perm load 0,9	0 deg	1a	0	19640	105	0	421	752	148	4621
		1b	0	19710	110	0	424	752	28	866
		3	0	34618	244	0	752	752	42	1300
		4	0	20706	134	0	446	752	28	866
		6	0	**16475**	107	0	**355**			
	45 deg	1a	**-14248**	29124	100	**-299**	621	752	148	4621
		1b	-916	20805	109	-19	447	752	28	866
		3	-2728	37951	241	-56	822	752	42	1300
		4	-570	21644	133	-12	466	752	28	866
	90 deg	1a	0	37392	**95**	0	795	752	148	4621
		1b	0	21698	108	0	466	752	28	866
		3	0	40706	239	0	880	752	42	1300
		4	0	22431	133	0	483	752	28	866
	-45 deg	1a	**14248**	29124	100	**299**	621	752	148	4621
		1b	916	20805	109	19	447	752	28	866
		3	2728	37951	241	56	822	752	42	1300
		4	570	21644	133	12	466	752	28	866

regel				Totaal												
			Loadcase	M_{langs}	M_{dwars}	N	V_{langs}	V_{dwars}	Totaal moment							
1	Perm load 1,2	0 deg	1a	4621	23601	1143	148	507	24048,84	1						
2	Perm load 1,2	0 deg	1b	866	24290	1148	28	523	24305,85	2						
3	Perm load 1,2	0 deg	3	1300	38231	1280	42	829	38252,65	3			x			
4	Perm load 1,2	0 deg	4	866	24873	1171	28	536	24888,28	4						
5	Perm load 1,2	0 deg	6							5						
6										6						
7	Perm load 1,2	45 deg	1a	14963	35376	1137	350	791	38410,57	7						
8	Perm load 1,2	45 deg	1b	1155	25827	1147	31	562	25853,24	8						
9	Perm load 1,2	45 deg	3	3080	42226	1278	74	923	42338,25	9						
10	Perm load 1,2	45 deg	4	954	26319	1171	27	573	26335,82	10						
11										11						
12	Perm load 1,2	90 deg	1a	0	43925	1132	0	985	43925,33	12						
13	Perm load 1,2	90 deg	1b	0	26859	1147	0	586	26859,42	13						
14	Perm load 1,2	90 deg	3	0	45178	1276	0	990	45177,56	14		x			x	x
15	Perm load 1,2	90 deg	4 Construc	0	27291	1170	0	597	27290,51	15						
16										16						
17	Perm load 1,2	-45 deg	1a	14963	35376	1137	350	791	38410,57	17						
18	Perm load 1,2	-45 deg	1b	1155	25827	1147	31	562	25853,24	18						
19	Perm load 1,2	-45 deg	3	3080	42226	1278	74	923	42338,25	19						
20	Perm load 1,2	-45 deg	4	954	26319	1171	27	573	26335,82	20						
21										21						
22	Perm load 0,9	0 deg	1a	4621	19640	857	148	421	20176,73	22						
23	Perm load 0,9	0 deg	1b	866	19710	862	28	424	19728,88	23						
24	Perm load 0,9	0 deg	3	1300	34618	996	42	752	34642,61	24						
25	Perm load 0,9	0 deg	4	866	20706	886	28	446	20724,62	25						
26	Perm load 0,9	0 deg	6							26						
27										27						
28	Perm load 0,9	45 deg	1a	17515	32392	853	404	726	36824,35	28	x			x		
29	Perm load 0,9	45 deg	1b	1528	21418	861	38	467	21471,97	29						
30	Perm load 0,9	45 deg	3	3647	38870	993	86	851	39041,07	30						
31	Perm load 0,9	45 deg	4 Construc	1182	22256	886	31	486	22287,83	31						
32										32						
33	Perm load 0,9	90 deg	1a	0	42013	847	0	943	42012,8	33						
34	Perm load 0,9	90 deg	1b	0	22564	861	0	494	22564,35	34						
35	Perm load 0,9	90 deg	3	0	42005	991	0	921	42005,32	35						
36	Perm load 0,9	90 deg	4	0	23297	885	0	510	23297,06	36						
37										37						
38	Perm load 0,9	-45 deg	1a	17515	32392	853	404	726	36824,35	38	x			x		
39	Perm load 0,9	-45 deg	1b	1528	21418	861	38	467	21471,97	39						
40	Perm load 0,9	-45 deg	3	3647	38870	993	86	851	39041,07	40						
41	Perm load 0,9	-45 deg	4	1182	22256	886	31	486	22287,83	41						
			Max	17515	45178	1280	404	990	45178							

samenvatting

	Mast	Bijlage	Wind	Loadcase	M_{langs}	M_{dwars}	N	V_{langs}	V_{dwars}
3	W2H400+117-O	Perm load	0 deg	3	1300	38231	1280	42	829
14	W2H400+117-O	Perm load	90 deg	3	0	45178	1276	0	990
28	W2H400+117-O	Perm load	45 deg	1a	17515	32392	853	404	726

W2H400+10 TOWER (rev 6.0, date: 05- Appendix O
Loadcases for tower strength (ultimate limit state)

Loadcase	Attachment point	**AHEAD**			**BACK**			Totaal Vert	Dwars	Langs	Belastingen op mastvoet, per lijn M_{langs}	M_{dwars}	N	V_{langs}	V_{dwars}
		[N]	[N]	[N]	[N]	[N]	[N]	[kN]	[kN]	[kN]					
1a	380C1F1	20485	75297	136712	20485	75297	-136712	40,97	150,594	0	0	8583,858	40,97	0	150,594
Wind, 10 (	380C1F2	20524	74336	135898	20524	74336	-135898	41,048	148,672	0	0	6987,584	41,048	0	148,672
Permaner	380C1F3	20569	73158	134961	20569	73158	-134961	41,138	146,316	0	0	5413,692	41,138	0	146,316
Wind angl	GW / opgv	2652	10545	18596	2652	10545	-18596	5,304	21,09	0	0	1405,034	5,304	0	21,09
	Comp. gl	5567	20126	36891	5567	20126	-36891	11,134	40,252	0	0	1210,537	11,134	0	40,252
1b	380C1F1	21289	77125	151829	21289	77125	-151829	42,578	154,25	0	0	8792,25	42,578	0	154,25
Wind, -20	380C1F2	21291	77013	151827	21291	77013	-151827	42,582	154,026	0	0	7239,222	42,582	0	154,026
Permaner	380C1F3	21294	76872	151829	21294	76872	-151829	42,588	153,744	0	0	5688,528	42,588	0	153,744
Wind angl	GW / opgv	2774	10056	19659	2774	10056	-19659	5,548	20,112	0	0	1340,251	5,548	0	20,112
	Comp. gl	5745	20446	40313	5745	20446	-40313	11,49	40,892	0	0	1230,156	11,49	0	40,892
3	380C1F1	35333	110372	213376	35333	110372	-213376	70,666	220,744	0	0	12582,41	70,666	0	220,744
Wind+ice,	380C1F2	35341	110036	213325	35341	110036	-213325	70,682	220,072	0	0	10343,38	70,682	0	220,072
Permaner	380C1F3	35350	109617	213281	35350	109617	-213281	70,7	219,234	0	0	8111,658	70,7	0	219,234
Wind angl	GW / opgv	10764	28348	54231	10764	28348	-54231	21,528	56,696	0	0	3782,655	21,528	0	56,696
	Comp. gl	21757	56274	109301	21757	56274	-109301	43,514	112,548	0	0	3410,458	43,514	0	112,548
4	380C1F1	24364	77946	153473	24364	77946	-153473	48,728	155,892	0	0	8885,844	48,728	0	155,892
Construction/mainte		24366	77839	153481	24366	77839	-153481	48,732	155,678	0	0	7316,866	48,732	0	155,678
Permaner	380C1F3	24367	77704	153495	24367	77704	-153495	48,734	155,408	0	0	5750,096	48,734	0	155,408
Wind angl	GW / opgv	3606	11399	22352	3606	11399	-22352	7,212	22,798	0	0	1519,945	7,212	0	22,798
	Comp. gl	7411	23215	45867	7411	23215	-45867	14,822	46,43	0	0	1400,441	14,822	0	46,43
6	380C1F1	23267	72548	145509	23267	72548	-145509	46,534	145,096	0	0	8270,472	46,534	0	145,096
Permaner	380C1F2	23267	72548	145509	23267	72548	-145509	46,534	145,096	0	0	6819,512	46,534	0	145,096
Permaner	380C1F3	23267	72548	145509	23267	72548	-145509	46,534	145,096	0	0	5368,552	46,534	0	145,096
	GW / opgv	3042	9537	19127	3042	9537	-19127	6,084	19,074	0	0	1271,704	6,084	0	19,074
	Comp. gl	6308	19750	39612	6308	19750	-39612	12,616	39,5	0	0	1191,428	12,616	0	39,5
1a	380C1F1	20687	69837	132835	18700	138063	-212228	39,387	207,9	-79,393	-4525,4	11850,3	39,387	-79,393	207,9
Wind, 10 (	380C1F2	20699	69473	132667	18821	131106	-203310	39,52	200,579	-70,643	-3320,22	9427,213	39,52	-70,643	200,579
Permaner	380C1F3	20712	69022	132483	18997	122244	-191985	39,709	191,266	-59,502	-2201,57	7076,842	39,709	-59,502	191,266
Wind angl	GW / opgv	2696	9405	17573	2390	22696	-33977	5,086	32,101	-16,404	-1089,72	2136,33	5,086	-16,404	32,101
	Comp. gl	5611	18847	36043	5116	35245	-54983	10,727	54,092	-18,94	-558,73	1617,973	10,727	-18,94	54,092
1b	380C1F1	21300	76445	151878	21022	84058	-155673	42,322	160,503	-3,795	-216,315	9148,671	42,322	-3,795	160,503
Wind, -20	380C1F2	21300	76394	151889	21061	83211	-154980	42,361	159,605	-3,091	-145,277	7501,435	42,361	-3,091	159,605
Permaner	380C1F3	21301	76330	151904	21108	82173	-154186	42,409	158,503	-2,282	-84,434	5864,611	42,409	-2,282	158,503
Wind angl	GW / opgv	2776	9926	19650	2715	11488	-20736	5,491	21,414	-1,086	-72,143	1426,7	5,491	-1,086	21,414
	Comp. gl	5748	20283	40329	5689	22077	-41141	11,437	42,36	-0,812	-23,954	1273,352	11,437	-0,812	42,36
3	380C1F1	35373	108360	213292	34479	131967	-228563	69,852	240,327	-15,271	-870,447	13698,64	69,852	-15,271	240,327
Wind+ice,	380C1F2	35375	108212	213310	34592	129323	-226069	69,967	237,535	-12,759	-599,673	11164,15	69,967	-12,759	237,535
Permaner	380C1F3	35378	108025	213338	34732	126069	-223144	70,11	234,094	-9,806	-362,822	8661,478	70,11	-9,806	234,094
Wind angl	GW / opgv	10775	27712	54254	10530	34821	-57976	21,305	62,533	-3,722	-247,252	4170,238	21,305	-3,722	62,533
	Comp. gl	21767	55463	109437	21514	63954	-112160	43,281	119,417	-2,723	-80,3285	3612,61	43,281	-2,723	119,417
4	380C1F1	24372	77290	153572	24172	84274	-156100	48,544	161,564	-2,528	-144,096	9209,148	48,544	-2,528	161,564
Construction/mainte		24372	77240	153586	24201	83517	-155587	48,573	160,757	-2,001	-94,047	7555,579	48,573	-2,001	160,757
Permaner	380C1F3	24373	77177	153603	24235	82586	-155007	48,608	159,763	-1,404	-51,948	5911,231	48,608	-1,404	159,763
Wind angl	GW / opgv	3607	11279	22363	3567	12605	-22974	7,174	23,884	-0,611	-40,5887	1592,059	7,174	-0,611	23,884
	Comp. gl	7413	23061	45901	7375	24639	-46277	14,788	47,7	-0,376	-11,092	1437,835	14,788	-0,376	47,7
1a	380C1F1	18874	128282	199695	18874	128282	-199695	37,748	256,564	0	0	14624,15	37,748	0	256,564
Wind, 10 (	380C1F2	18999	122131	191841	18999	122131	-191841	37,998	244,262	0	0	11480,31	37,998	0	244,262
Permaner	380C1F3	19177	114331	181940	19177	114331	-181940	38,354	228,662	0	0	8460,494	38,354	0	228,662
Wind angl	GW / opgv	2409	20901	31642	2409	20901	-31642	4,818	41,802	0	0	2780,564	4,818	0	41,802
	Comp. gl	5164	32837	51872	5164	32837	-51872	10,328	65,674	0	0	1958,814	10,328	0	65,674
1b	380C1F1	21076	82876	154716	21076	82876	-154716	42,152	165,752	0	0	9447,864	42,152	0	165,752
Wind, -20	380C1F2	21108	82160	154176	21108	82160	-154176	42,216	164,32	0	0	7723,04	42,216	0	164,32
Permaner	380C1F3	21146	81282	153562	21146	81282	-153562	42,292	162,564	0	0	6014,868	42,292	0	162,564
Wind angl	GW / opgv	2727	11239	20488	2727	11239	-20488	5,454	22,478	0	0	1497,353	5,454	0	22,478
	Comp. gl	5701	21800	40929	5701	21800	-40929	11,402	43,6	0	0	1309,859	11,402	0	43,6
3	380C1F1	34638	128272	225106	34638	128272	-225106	69,276	256,544	0	0	14623,01	69,276	0	256,544
Wind+ice,	380C1F2	34734	126028	223108	34734	126028	-223108	69,468	252,056	0	0	11846,63	69,468	0	252,056
Permaner	380C1F3	34853	123270	220782	34853	123270	-220782	69,706	246,54	0	0	9121,98	69,706	0	246,54
Wind angl	GW / opgv	10572	33736	57101	10572	33736	-57101	21,144	67,472	0	0	4498,213	21,144	0	67,472
	Comp. gl	21562	62688	111385	21562	62688	-111385	43,124	125,376	0	0	3788,074	43,124	0	125,376
4	380C1F1	24212	83216	155393	24212	83216	-155393	48,424	166,432	0	0	9486,624	48,424	0	166,432
Construction/mainte		24235	82574	155000	24235	82574	-155000	48,47	165,148	0	0	7761,956	48,47	0	165,148
Permaner	380C1F3	24263	81783	154560	24263	81783	-154560	48,526	163,566	0	0	6051,942	48,526	0	163,566
Wind angl	GW / opgv	3575	12401	22817	3575	12401	-22817	7,15	24,802	0	0	1653,024	7,15	0	24,802
	Comp. gl	7382	24405	46153	7382	24405	-46153	14,764	48,81	0	0	1470,53	14,764	0	48,81
1a	380C1F1	18700	138063	212228	20687	69837	-132835	39,387	207,9	79,393	4525,401	11850,3	39,387	79,393	207,9
Wind, 10 (	380C1F2	18821	131106	203310	20699	69473	-132667	39,52	200,579	70,643	3320,221	9427,213	39,52	70,643	200,579
Permaner	380C1F3	18997	122244	191985	20712	69022	-132483	39,709	191,266	59,502	2201,574	7076,842	39,709	59,502	191,266
Wind angl	GW / opgv	2390	22696	33977	2696	9405	-17573	5,086	32,101	16,404	1089,718	2136,33	5,086	16,404	32,101
	Comp. gl	5116	35245	54983	5611	18847	-36043	10,727	54,092	18,94	558,73	1617,973	10,727	18,94	54,092
1b	380C1F1	21022	84058	155673	21300	76445	-151878	42,322	160,503	3,795	216,315	9148,671	42,322	3,795	160,503
Wind, -20	380C1F2	21061	83211	154980	21300	76394	-151889	42,361	159,605	3,091	145,277	7501,435	42,361	3,091	159,605
Permaner	380C1F3	21108	82173	154186	21301	76330	-151904	42,409	158,503	2,282	84,434	5864,611	42,409	2,282	158,503
Wind angl	GW / opgv	2715	11488	20736	2776	9926	-19650	5,491	21,414	1,086	72,14298	1426,7	5,491	1,086	21,414
	Comp. gl	5689	22077	41141	5748	20283	-40329	11,437	42,36	0,812	23,954	1273,352	11,437	0,812	42,36
3	380C1F1	34479	131967	228563	35373	108360	-213292	69,852	240,327	15,271	870,447	13698,64	69,852	15,271	240,327
Wind+ice,	380C1F2	34592	129323	226069	35375	108212	-213310	69,967	237,535	12,759	599,673	11164,15	69,967	12,759	237,535
Permaner	380C1F3	34732	126069	223144	35378	108025	-213338	70,11	234,094	9,806	362,822	8661,478	70,11	9,806	234,094
Wind angl	GW / opgv	10530	34821	57976	10775	27712	-54254	21,305	62,533	3,722	247,2525	4170,238	21,305	3,722	62,533
0 Comp. gl		21514	63954	112160	21767	55463	-109437	43,281	119,417	2,723	80,3285	3612,61	43,281	2,723	119,417
4	380C1F1	24172	84274	156100	24372	77290	-153572	48,544	161,564	2,528	144,096	9209,148	48,544	2,528	161,564
Construction/mainte		24201	83517	155587	24372	77240	-153586	48,573	160,757	2,001	94,047	7555,579	48,573	2,001	160,757
Permaner	380C1F3	24235	82586	155007	24373	77177	-153603	48,608	159,763	1,404	51,948	5911,231	48,608	1,404	159,763
Wind angl	GW / opgv	3567	12605	22974	3607	11279	-22363	7,174	23,884	0,611	40,58873	1592,059	7,174	0,611	23,884
	Comp. gl	7375	24639	46277	7413	23061	-45901	14,788	47,7	0,376	11,092	1437,835	14,788	0,376	47,7
1a	380C1F1	15361	62907	111866	15361	62907	-111866	30,722	125,814	0	0	7171,398	30,722	0	125,814
Wind, 10 (	380C1F2	15407	61758	110673	15407	61758	-110673	30,814	123,516	0	0	5805,252	30,814	0	123,516
Permaner	380C1F3	15464	60351	109278	15464	60351	-109278	30,928	120,702	0	0	4465,974	30,928	0	120,702
Wind angl	GW / opgv	1977	9006	15511	1977	9006	-15511	3,954	18,012	0	0	1199,538	3,954	0	18,012
	Comp. gl	4178	16626	29872	4178	16626	-29872	8,356	33,252	0	0	998,2727	8,356	0	33,252
1b	380C1F1	16201	62670	122837	16201	62670	-122837	32,402	125,34	0	0	7144,38	32,402	0	125,34
Wind, -20	380C1F2	16204	62547	122813	16204	62547	-122813	32,408	125,094	0	0	5879,418	32,408	0	125,094
Permaner	380C1F3	16208	62394	122791	16208	62394	-122791	32,416	124,788	0	0	4617,156	32,416	0	124,788
Wind angl	GW / opgv	2105	8111	15757	2105	8111	-15757	4,21	16,222	0	0	1080,823	4,21	0	16,222
	Comp. gl	4363	16440	32278	4363	16440	-32278	8,726	32,88	0	0	988,0665	8,726	0	32,88
3	380C1F1	30385	98682	189931	30385	98682	-189931	60,77	197,364	0	0	11249,75	60,77	0	197,364
Wind+ice,	380C1F2	30395	98327	189842	30395	98327	-189842	60,79	196,654	0	0	9242,738	60,79	0	196,654
Permaner	380C1F3	30406	97885	189752	30406	97885	-189752	60,812	195,77	0	0	7243,49	60,812	0	195,77
Wind angl	GW / opgv	10136	27156	51842	10136	27156	-51842	20,272	54,312	0	0	3623,333	20,272	0	54,312
	Comp. gl	20455	53797	104333	20455	53797	-104333	40,91	107,594	0	0	3258,911	40,91	0	107,594
4	380C1F1	19348	64745	126997	19348	64745	-126997	38,696	129,49	0	0	7380,93	38,696	0	129,49
Construction/mainte		19350	64631	126991	19350	64631	-126991	38,7	129,262	0	0	6075,314	38,7	0	129,262
Permaner	380C1F3	19352	64489	126990	19352	64489	-126990	38,704	128,978	0	0	4772,186	38,704	0	128,978

Belasting op mastvoet, belastinggeval

	M_{langs}	M_{dwars}	N	V_{langs}	V_{dwars}
1a	0	23600,71	139,594	0	506,924
Wind angle: 0 dgr					
1b	0	24290,41	144,786	0	523,024
Wind angle: 0 dgr					
3	0	38230,56	277,09	0	829,294
Wind angle: 0 dgr					
4	0	24873,19	168,228	0	536,206
Wind angle: 0 dgr					
6	0	22921,67	158,302	0	493,862
0					
1a	-11695,6	32108,66	134,429	-244,882	685,938
Wind angle: 45 dgr					
1b	-542,123	25214,77	144,02	-11,066	542,385
Wind angle: 45 dgr					
3	-2160,52	41307,11	274,515	-44,281	893,906
Wind angle: 45 dgr					
4	-341,772	25705,85	167,687	-6,92	553,668
Wind angle: 45 dgr					
1a	0	39304,33	129,246	0	836,964
Wind angle: 90 dgr					
1b	0	25992,98	143,516	0	558,714
Wind angle: 90 dgr					
3	0	43877,91	272,718	0	947,988
Wind angle: 90 dgr					
4	0	26424,08	167,334	0	568,758
Wind angle: 90 dgr					
1a	11695,64	32108,66	134,429	244,882	685,938
Wind angle: -45 dgr					
1b	542,123	25214,77	144,02	11,066	542,385
Wind angle: -45 dgr					
3	2160,523	41307,11	274,515	44,281	893,906
Wind angle: -45 dgr					
4	341,7717	25705,85	167,687	6,92	553,668
Wind angle: -45 dgr					
1a	0	19640,43	104,774	0	421,296
Wind angle: 0 dgr					
1b	0	19709,84	110,162	0	424,324
Wind angle: 0 dgr					
3	0	34618,22	243,554	0	751,694
Wind angle: 0 dgr					
4	0	20706,5	134,112	0	446,47
Wind angle: 0 dgr					

Wind angl	GW / opg	2951	9689	18923	2951	9689	-18923	5,902	19,378	0	0	1291,76	5,902	0	19,378												
	Comp. gl	6055	19681	38780	6055	19681	-38780	12,11	39,362	0	0	1186,307	12,11	0	39,362												
6	380C1F1	15721	52192	104680	15721	52192	-104680	31,442	104,384	0	0	5949,888	31,442	0	104,384		6	0	16475,04	106,944	0	354,978					
Permanen	380C1F2	15721	52192	104680	15721	52192	-104680	31,442	104,384	0	0	4906,048	31,442	0	104,384		0										
Permanen	380C1F3	15721	52192	104680	15721	52192	-104680	31,442	104,384	0	0	3862,208	31,442	0	104,384												
	GW / opg	2052	6800	13639	2052	6800	-13639	4,104	13,6	0	0	906,5629	4,104	0	13,6												
	Comp. gl	4257	14113	28307	4257	14113	-28307	8,514	28,226	0	0	850,3336	8,514	0	28,226												
1a	380C1F1	15616	56429	105944	13788	133000	-202078	29,404	189,429	-96,134	-5479,64	10797,45	29,404	-96,134	189,429		1a	-14247,9	29124,44	100,349	-299,346	621,285					
Wind, 10	380C1F2	15631	56006	105658	13871	125613	-192298	29,502	181,619	-86,64	-4072,08	8536,093	29,502	-86,64	181,619		Wind angle:	45	dgr								
Permanen	380C1F3	15649	55486	105337	13996	116116	-179699	29,645	171,602	-74,362	-2751,39	6349,274	29,645	-74,362	171,602												
Wind angl	GW / opg	2028	7647	14047	1766	22204	-32992	3,794	29,851	-18,945	-1258,52	1985,882	3,794	-18,945	29,851												
	Comp. gl	4235	15115	28559	3769	33669	-51824	8,004	48,784	-23,265	-686,318	1455,736	8,004	-23,265	48,784												
1b	380C1F1	16217	61937	122780	15845	70830	-129145	32,062	132,767	-6,365	-362,805	7567,719	32,062	-6,365	132,767		1b	-915,684	20804,84	109,143	-18,826	447,232					
Wind, -20	380C1F2	16218	61883	122785	15895	69808	-128100	32,113	131,691	-5,315	-249,805	6189,477	32,113	-5,315	131,691		Wind angle:	45	dgr								
Permanen	380C1F3	16219	61815	122793	15955	68559	-126882	32,174	130,374	-4,089	-151,293	4823,838	32,174	-4,089	130,374												
Wind angl	GW / opg	2109	7968	15723	2032	9820	-17391	4,141	17,788	-1,668	-110,805	1184,8	4,141	-1,668	17,788												
	Comp. gl	4366	16265	32271	4287	18347	-33660	8,653	34,612	-1,389	-40,9755	1039,009	8,653	-1,389	34,612												
3	380C1F1	30434	96572	189651	29423	122267	-209115	59,857	218,839	-19,464	-1109,45	12473,82	59,857	-19,464	218,839		3	-2727,84	37951,37	240,673	-56,103	821,657					
Wind+ice,	380C1F2	30437	96419	189659	29544	119367	-206107	59,981	215,786	-16,448	-773,056	10141,94	59,981	-16,448	215,786		Wind angle:	45	dgr								
Permanen	380C1F3	30440	96226	189675	29696	115794	-202539	60,136	212,02	-12,864	-475,968	7844,74	60,136	-12,864	212,02												
Wind angl	GW / opg	10148	26511	51845	9889	33831	-55994	20,037	60,342	-4,149	-275,618	4023,727	20,037	-4,149	60,342												
	Comp. gl	20466	52976	104450	20196	61694	-107628	40,662	114,67	-3,178	-93,751	3467,139	40,662	-3,178	114,67												
4	380C1F1	19358	64057	127031	19104	71854	-131190	38,462	135,911	-4,159	-237,063	7746,927	38,462	-4,159	135,911		4	-569,824	21643,78	133,423	-11,651	466,103					
Construction/mainte	19358	64005	127040	19139	70982	-130447	38,497	134,987	-3,407	-160,129	6344,389	38,497	-3,407	134,987		Wind angle:	45	dgr									
Permanen	380C1F3	19359	63940	127054	19182	69913	-129592	38,541	133,853	-2,538	-93,906	4952,561	38,541	-2,538	133,853												
Wind angl	GW / opg	2953	9563	18922	2904	11031	-19818	5,857	20,594	-0,896	-59,5213	1372,505	5,857	-0,896	20,594												
	Comp. gl	6057	19522	38803	6009	21236	-39454	12,066	40,758	-0,651	-19,2045	1227,398	12,066	-0,651	40,758												
1a	380C1F1	13908	122598	188300	13908	122598	-188300	27,816	245,196	0	0	13976,17	27,816	0	245,196		1a	0	37391,8	95,236	0	795,092					
Wind, 10	380C1F2	13998	115993	179536	13998	115993	-179536	27,996	231,986	0	0	10903,34	27,996	0	231,986		Wind angle:	90	dgr								
Permanen	380C1F3	14129	107533	168310	14129	107533	-168310	28,258	215,066	0	0	7957,442	28,258	0	215,066												
Wind angl	GW / opg	1779	20342	30520	1779	20342	-30520	3,558	40,684	0	0	2705,339	3,558	0	40,684												
	Comp. gl	3804	31080	48351	3804	31080	-48351	7,608	62,16	0	0	1849,507	7,608	0	62,16												
1b	380C1F1	15914	69404	127698	15914	69404	-127698	31,828	138,808	0	0	7912,056	31,828	0	138,808		1b	0	21697,91	108,446	0	465,942					
Wind, -20	380C1F2	15956	68543	126867	15956	68543	-126867	31,912	137,086	0	0	6443,042	31,912	0	137,086		Wind angle:	90	dgr								
Permanen	380C1F3	16006	67491	125904	16006	67491	-125904	32,012	134,982	0	0	4994,334	32,012	0	134,982												
Wind angl	GW / opg	2045	9519	17040	2045	9519	-17040	4,09	19,038	0	0	1267,799	4,09	0	19,038												
	Comp. gl	4302	18014	33336	4302	18014	-33336	8,604	36,028	0	0	1080,679	8,604	0	36,028												
3	380C1F1	29593	118214	204937	29593	118214	-204937	59,186	236,428	0	0	13476,4	59,186	0	236,428		3	0	40705,67	238,604	0	879,552					
Wind+ice,	380C1F2	29698	115749	202495	29698	115749	-202495	59,396	231,498	0	0	10880,41	59,396	0	231,498		Wind angle:	90	dgr								
Permanen	380C1F3	29830	112717	199620	29830	112717	-199620	59,66	225,434	0	0	8341,058	59,66	0	225,434												
Wind angl	GW / opg	9933	32711	55045	9933	32711	-55045	19,866	65,422	0	0	4361,062	19,866	0	65,422												
	Comp. gl	20248	60385	106766	20248	60385	-106766	40,496	120,77	0	0	3646,744	40,496	0	120,77												
4	380C1F1	19153	70636	130163	19153	70636	-130163	38,306	141,272	0	0	8052,504	38,306	0	141,272		4	0	22430,62	132,968	0	482,616					
Construction/mainte	19182	69900	129582	19182	69900	-129582	38,364	139,8	0	0	6570,6	38,364	0	139,8		Wind angle:	90	dgr									
Permanen	380C1F3	19217	68997	128918	19217	68997	-128918	38,434	137,994	0	0	5105,778	38,434	0	137,994												
Wind angl	GW / opg	2913	10799	19606	2913	10799	-19606	5,826	21,598	0	0	1439,177	5,826	0	21,598												
	Comp. gl	6019	20976	39274	6019	20976	-39274	12,038	41,952	0	0	1262,563	12,038	0	41,952												
1a	380C1F1	13788	133000	202078	15616	56429	-105944	29,404	189,429	96,134	5479,638	10797,45	29,404	96,134	189,429		1a	14247,95	29124,44	100,349	299,346	621,285					
Wind, 10	380C1F2	13871	125613	192298	15631	56006	-105658	29,502	181,619	86,64	4072,08	8536,093	29,502	86,64	181,619		Wind angle:	-45	dgr								
Permanen	380C1F3	13996	116116	179699	15649	55486	-105337	29,645	171,602	74,362	2751,394	6349,274	29,645	74,362	171,602												
Wind angl	GW / opg	1766	22204	32992	2028	7647	-14047	3,794	29,851	18,945	1258,516	1985,882	3,794	18,945	29,851												
	Comp. gl	3769	33669	51824	4235	15115	-28559	8,004	48,784	23,265	686,3175	1455,736	8,004	23,265	48,784												
1b	380C1F1	15845	70830	129145	16217	61937	-122780	32,062	132,767	6,365	362,805	7567,719	32,062	6,365	132,767		1b	915,6837	20804,84	109,143	18,826	447,232					
Wind, -20	380C1F2	15895	69808	128100	16218	61883	-122785	32,113	131,691	5,315	249,805	6189,477	32,113	5,315	131,691		Wind angle:	-45	dgr								
Permanen	380C1F3	15955	68559	126882	16219	61815	-122793	32,174	130,374	4,089	151,293	4823,838	32,174	4,089	130,374												
Wind angl	GW / opg	2032	9820	17391	2109	7968	-15723	4,141	17,788	1,668	110,8052	1184,8	4,141	1,668	17,788												
	Comp. gl	4287	18347	33660	4366	16265	-32271	8,653	34,612	1,389	40,9755	1039,009	8,653	1,389	34,612												
3	380C1F1	29423	122267	209115	30434	96572	-189651	59,857	218,839	19,464	1109,448	12473,82	59,857	19,464	218,839		3	2727,841	37951,37	240,673	56,103	821,657					
Wind+ice,	380C1F2	29544	119367	206107	30437	96419	-189659	59,981	215,786	16,448	773,056	10141,94	59,981	16,448	215,786		Wind angle:	-45	dgr								
Permanen	380C1F3	29696	115794	202539	30440	96226	-189675	60,136	212,02	12,864	475,968	7844,74	60,136	12,864	212,02												
Wind angl	GW / opg	9889	33831	55994	10148	26511	-51845	20,037	60,342	4,149	275,6181	4023,727	20,037	4,149	60,342												
0 Comp. gl		20196	61694	107628	20466	52976	-104450	40,662	114,67	3,178	93,751	3467,139	40,662	3,178	114,67												
4	380C1F1	19104	71854	131190	19358	64057	-127031	38,462	135,911	4,159	237,063	7746,927	38,462	4,159	135,911		4	569,8238	21643,78	133,423	11,651	466,103					
Construction/mainte	19139	70982	130447	19358	64005	-127040	38,497	134,987	3,407	160,129	6344,389	38,497	3,407	134,987		Wind angle:	-45	dgr									
Permanen	380C1F3	19182	69913	129592	19359	63940	-127054	38,541	133,853	2,538	93,906	4952,561	38,541	2,538	133,853												
Wind angl	GW / opg	2904	11031	19818	2953	9563	-18922	5,857	20,594	0,896	59,52128	1372,505	5,857	0,896	20,594												
	Comp. gl	6009	21236	39454	6057	19522	-38803	12,066	40,758	0,651	19,2045	1227,398	12,066	0,651	40,758												

W2H400+117-01

Hoogte mast	Ber & bijlage	67 m	
Hoogte onderste stroomdraad (F3)		37 m	
		Hoogte	Excentriciteit ophanging t.o.v. hart mast
Bliksemdraad = GW / (H_{mast} -	0,57 m =	66,43 m	0,759 m
1e traverse - 380C1F1 F2 +	10 m =	57 m	0 m
2e traverse - 380C1F2 F3 +	10 m =	47 m	0 m
3e traverse - 380C1F3		37 m	0 m
Passieve lijn = Comp C F3 -	7,5 m =	29,5 m	2,075 m

Uit mast (excl belastingsfactoren) N [kN]	V [kN]	M [kNm]	Uit lijnen (incl belastingsfactoren) Nmin [kN]	Nmax [kN]	Vmax [kN]	Mlangs;max [kNm]	Mdwars;max [kNm]
1003	148	4621	101	173	696	5453	32379

			Belastingen uit lijnen M_{langs}	M_{dwars}	N	V_{langs}	V_{dwars}	Belasting uit mast N	V	M
Perm load 1,2	0 deg	1a	0	22028	141	0	474	1003	148	4621
		1b	0	24206	145	0	521	1003	28	866
		3	0	26959	**173**	0	582	1003	42	1300
		4	0	24166	163	0	521	1003	28	866
		6	0	22922	158	0	494			
	45 deg	1a	-4000	25597	138	-83	549	1003	148	4621
		1b	-299	24884	144	-6	535	1003	28	866
		3	-2889	29943	170	-60	645	1003	42	1300
		4	-187	24792	163	-4	534	1003	28	866
	90 deg	1a	0	28486	136	0	609	1003	148	4621
		1b	0	25465	144	0	548	1003	28	866
		3	0	**32379**	169	0	**696**	1003	42	1300
		4	0	25340	162	0	546	1003	28	866
	-45 deg	1a	4000	25597	138	83	549	1003	148	4621
		1b	299	24884	144	6	535	1003	28	866
		3	2889	29943	170	60	645	1003	42	1300
		4	187	24792	163	4	534	1003	28	866
Perm load 0,9	0 deg	1a	0	17778	106	0	382	752	148	4621
		1b	0	19618	110	0	422	752	28	866
		3	0	22803	139	0	493	752	42	1300
		4	0	19952	129	0	430	752	28	866
		6	0	**16475**	107	0	**355**			
	45 deg	1a	**-5453**	21980	103	**-114**	470	752	148	4621
		1b	-549	20410	110	-11	439	752	28	866
		3	-3859	26219	136	-80	564	752	42	1300
		4	-349	20653	128	-7	445	752	28	866
	90 deg	1a	0	25398	**101**	0	542	752	148	4621
		1b	0	21067	109	0	453	752	28	866
		3	0	28986	134	0	623	752	42	1300
		4	0	21250	128	0	457	752	28	866
	-45 deg	1a	**5453**	21980	103	**114**	470	752	148	4621
		1b	549	20410	110	11	439	752	28	866
		3	3859	26219	136	80	564	752	42	1300
		4	349	20653	128	7	445	752	28	866

regel			Loadcase	Totaal M_{langs}	M_{dwars}	N	V_{langs}	V_{dwars}	Totaal moment						
1	Perm load 1,2	0 deg	1a	4621	22028	1144	148	474	22507,8	1					
2	Perm load 1,2	0 deg	1b	866	24206	1148	28	521	24221,32	2					
3	Perm load 1,2	0 deg	3	1300	26959	1176	42	582	26990,61	3			x		
4	Perm load 1,2	0 deg	4	866	24166	1166	28	521	24181,04	4					
5	Perm load 1,2	0 deg	6							5					
6										6					
7	Perm load 1,2	45 deg	1a	7267	28864	1141	188	653	29764,99	7					
8	Perm load 1,2	45 deg	1b	912	25496	1147	26	555	25512,56	8					
9	Perm load 1,2	45 deg	3	3808	30862	1173	89	674	31095,85	9					
10	Perm load 1,2	45 deg	4	799	25405	1166	23	554	25417,13	10					
11										11					
12	Perm load 1,2	90 deg	1a	0	33107	1139	0	757	33107,48	12				x	
13	Perm load 1,2	90 deg	1b	0	26332	1147	0	575	26331,82	13					
14	Perm load 1,2	90 deg	3	0	33678	1172	0	738	33678,28	14		x			x
15	Perm load 1,2	90 deg	4 Construc	0	26207	1165	0	573	26206,88	15					
16										16					
17	Perm load 1,2	-45 deg	1a	7267	28864	1141	188	653	29764,99	17					
18	Perm load 1,2	-45 deg	1b	912	25496	1147	26	555	25512,56	18					
19	Perm load 1,2	-45 deg	3	3808	30862	1173	89	674	31095,85	19					
20	Perm load 1,2	-45 deg	4	799	25405	1166	23	554	25417,13	20					
21										21					
22	Perm load 0,9	0 deg	1a	4621	17778	859	148	382	18369,01	22					
23	Perm load 0,9	0 deg	1b	866	19618	862	28	422	19636,86	23					
24	Perm load 0,9	0 deg	3	1300	22803	891	42	493	22840,1	24					
25	Perm load 0,9	0 deg	4	866	19952	881	28	430	19970,61	25					
26	Perm load 0,9	0 deg	6							26					
27										27					
28	Perm load 0,9	45 deg	1a	8721	25248	855	218	575	26711,15	28	x		x		
29	Perm load 0,9	45 deg	1b	1161	21022	862	31	459	21054,46	29					
30	Perm load 0,9	45 deg	3	4778	27138	888	110	594	27555,44	30					
31	Perm load 0,9	45 deg	4 Construc	962	21265	881	27	464	21287,1	31					
32										32					
33	Perm load 0,9	90 deg	1a	0	30019	853	0	690	30019,1	33					
34	Perm load 0,9	90 deg	1b	0	21933	861	0	480	21933,17	34					
35	Perm load 0,9	90 deg	3	0	30286	886	0	664	30285,61	35					
36	Perm load 0,9	90 deg	4	0	22116	880	0	485	22116,05	36					
37										37					
38	Perm load 0,9	-45 deg	1a	8721	25248	855	218	575	26711,15	38	x		x		
39	Perm load 0,9	-45 deg	1b	1161	21022	862	31	459	21054,46	39					
40	Perm load 0,9	-45 deg	3	4778	27138	888	110	594	27555,44	40					
41	Perm load 0,9	-45 deg	4	962	21265	881	27	464	21287,1	41					
			Max	8721	33678	1176	218	757	33678						

samenvatting

	Mast	Bijlage		Wind	Loadcase	M_{langs}	M_{dwars}	N	V_{langs}	V_{dwars}
3	W2H400+117-O1		Perm load	0 deg	3	1300	26959	1176	42	582
12	W2H400+117-O1		Perm load	90 deg	1a	0	33107	1139	0	757
14	W2H400+117-O1		Perm load	90 deg	3	0	33678	1172	0	738
28	W2H400+117-O1		Perm load	45 deg	1a	8721	25248	855	218	575

W2H400+10 TOWER (rev 6.0, date: 05- Appendix O1
Loadcases for tower strength (special limit state)

Loadcase	Attachment point	**AHEAD** [N]	[N]	[N]	**BACK** [N]	[N]	[N]	Totaal Vert [kN]	Dwars [kN]	Langs [kN]	Belastingen op mastvoet, per lijn M_{langs}	M_{dwars}	N	V_{langs}	V_{dwars}	Belasting op mastvoet, belastinggeval	M_{langs}	M_{dwars}	N	V_{langs}	V_{dwars}
1a	380C1F1	20683	69972	132902	20683	69972	-132902	41,366	139,944	0	0	7976,808	41,366	0	139,944	1a	0	22028,34	140,784	0	474,004
Wind, 10 (	380C1F2	20695	69594	132721	20695	69594	-132721	41,39	139,188	0	0	6541,836	41,39	0	139,188	Wind angle: 0 dgr					
Permaner	380C1F3	20709	69125	132523	20709	69125	-132523	41,418	138,25	0	0	5115,25	41,418	0	138,25						
Wind angl	GW / opgv	2695	9433	17592	2695	9433	-17592	5,39	18,866	0	0	1257,359	5,39	0	18,866						
	Comp. gl	5610	18878	36057	5610	18878	-36057	11,22	37,756	0	0	1137,084	11,22	0	37,756						
1b	380C1F1	21294	76841	151831	21294	76841	-151831	42,588	153,682	0	0	8759,874	42,588	0	153,682	1b	0	24205,82	144,818	0	521,244
Wind, -20	380C1F2	21296	76755	151836	21296	76755	-151836	42,592	153,51	0	0	7214,97	42,592	0	153,51	Wind angle: 0 dgr					
Permaner	380C1F3	21297	76647	151847	21297	76647	-151847	42,594	153,294	0	0	5671,878	42,594	0	153,294						
Wind angl	GW / opgv	2775	10001	19651	2775	10001	-19651	5,55	20,002	0	0	1332,945	5,55	0	20,002						
	Comp. gl	5747	20378	40315	5747	20378	-40315	11,494	40,756	0	0	1226,152	11,494	0	40,756						
3	380C1F1	24206	82332	158739	24206	82332	-158739	48,412	164,664	0	0	9385,848	48,412	0	164,664	3	0	26959,3	173,078	0	582,094
Wind+ice,	380C1F2	24214	82041	158652	24214	82041	-158652	48,428	164,082	0	0	7711,854	48,428	0	164,082	Wind angle: 0 dgr					
Permaner	380C1F3	24224	81678	158562	24224	81678	-158562	48,448	163,356	0	0	6044,172	48,448	0	163,356						
Wind angl	GW / opgv	4555	15123	28235	4555	15123	-28235	9,11	30,246	0	0	2016,156	9,11	0	30,246						
	Comp. gl	9340	29873	57067	9340	29873	-57067	18,68	59,746	0	0	1801,268	18,68	0	59,746						
4	380C1F1	23663	75860	149863	23663	75860	-149863	47,326	151,72	0	0	8648,04	47,326	0	151,72	4	0	24165,51	162,964	0	520,906
Construction/mainte		23664	75777	149874	23664	75777	-149874	47,328	151,554	0	0	7123,038	47,328	0	151,554	Wind angle: 0 dgr					
Permaner	380C1F3	23665	75672	149891	23665	75672	-149891	47,33	151,344	0	0	5599,728	47,33	0	151,344						
Wind angl	GW / opgv	3430	10895	21444	3430	10895	-21444	6,86	21,79	0	0	1452,716	6,86	0	21,79						
	Comp. gl	7060	22249	44069	7060	22249	-44069	14,12	44,498	0	0	1341,99	14,12	0	44,498						
6	380C1F1	23267	72548	145509	23267	72548	-145509	46,534	145,096	0	0	8270,472	46,534	0	145,096	6	0	22921,67	158,302	0	493,862
Permaner	380C1F2	23267	72548	145509	23267	72548	-145509	46,534	145,096	0	0	6819,512	46,534	0	145,096	0					
Permaner	380C1F3	23267	72548	145509	23267	72548	-145509	46,534	145,096	0	0	5368,552	46,534	0	145,096						
	GW / opgv	3042	9537	19127	3042	9537	-19127	6,084	19,074	0	0	1271,704	6,084	0	19,074						
	Comp. gl	6308	19750	39612	6308	19750	-39612	12,616	39,5	0	0	1191,428	12,616	0	39,5						
1a	380C1F1	20743	67763	132149	19687	96377	-159684	40,43	164,14	-27,535	-1569,5	9355,98	40,43	-27,535	164,14	1a	-3999,77	25596,64	137,884	-82,981	548,758
Wind, 10 (	380C1F2	20746	67608	132130	19796	93154	-155834	40,542	160,762	-23,704	-1114,09	7555,814	40,542	-23,704	160,762	Wind angle: 45 dgr					
Permaner	380C1F3	20750	67414	132115	19939	89154	-151163	40,689	156,568	-19,048	-704,776	5793,016	40,689	-19,048	156,568						
Wind angl	GW / opgv	2709	8987	17354	2514	14843	-23770	5,223	23,83	-6,416	-426,215	1586,991	5,223	-6,416	23,83						
	Comp. gl	5623	18356	35903	5377	25102	-42181	11	43,458	-6,278	-185,201	1304,836	11	-6,278	43,458						
1b	380C1F1	21301	76315	151907	21118	81945	-154021	42,419	158,26	-2,114	-120,498	9020,82	42,419	-2,114	158,26	1b	-299,445	24883,59	144,313	-6,067	535,451
Wind, -20	380C1F2	21302	76275	151917	21144	81333	-153596	42,446	157,608	-1,679	-78,913	7407,576	42,446	-1,679	157,608	Wind angle: 45 dgr					
Permaner	380C1F3	21302	76225	151932	21176	80580	-153115	42,478	156,805	-1,183	-43,771	5801,785	42,478	-1,183	156,805						
Wind angl	GW / opgv	2777	9902	19653	2736	11043	-20305	5,513	20,945	-0,652	-43,3124	1395,561	5,513	-0,652	20,945						
	Comp. gl	5748	20251	40337	5709	21582	-40776	11,457	41,833	-0,439	-12,9505	1257,847	11,457	-0,439	41,833						
3	380C1F1	24247	80606	158438	23391	102069	-175833	47,638	182,675	-17,395	-991,515	10412,48	47,638	-17,395	182,675	3	-2889,3	29942,77	170,454	-59,79	644,773
Wind+ice,	380C1F2	24249	80482	158440	23493	99626	-173181	47,742	180,108	-14,741	-692,827	8465,076	47,742	-14,741	180,108	Wind angle: 45 dgr					
Permaner	380C1F3	24252	80325	158448	23622	96619	-170029	47,874	176,944	-11,581	-428,497	6546,928	47,874	-11,581	176,944						
Wind angl	GW / opgv	4576	14472	27966	4276	22751	-36152	8,852	37,223	-8,186	-543,796	2479,443	8,852	-8,186	37,223						
	Comp. gl	9359	29095	56915	8989	38728	-64802	18,348	67,823	-7,887	-232,667	2038,851	18,348	-7,887	67,823						
4	380C1F1	23668	75348	149967	23533	80626	-151368	47,201	155,974	-1,401	-79,857	8890,518	47,201	-1,401	155,974	4	-186,528	24791,9	162,597	-3,735	534,051
Construction/mainte		23668	75309	149978	23553	80064	-151046	47,221	155,373	-1,068	-50,196	7302,531	47,221	-1,068	155,373	Wind angle: 45 dgr					
Permaner	380C1F3	23669	75259	149994	23576	79372	-150688	47,245	154,631	-0,694	-25,678	5721,347	47,245	-0,694	154,631						
Wind angl	GW / opgv	3431	10801	21458	3403	11807	-21835	6,834	22,608	-0,377	-25,0441	1507,036	6,834	-0,377	22,608						
	Comp. gl	7061	22128	44100	7035	23337	-44295	14,096	45,465	-0,195	-5,7525	1370,467	14,096	-0,195	45,465						
1a	380C1F1	19841	91866	154315	19841	91866	-154315	39,682	183,732	0	0	10472,72	39,682	0	183,732	1a	0	28486,48	135,608	0	609,268
Wind, 10 (	380C1F2	19941	89104	151105	19941	89104	-151105	39,882	178,208	0	0	8375,776	39,882	0	178,208	Wind angle: 90 dgr					
Permaner	380C1F3	20069	85690	147242	20069	85690	-147242	40,138	171,38	0	0	6341,06	40,138	0	171,38						
Wind angl	GW / opgv	2537	13947	22632	2537	13947	-22632	5,074	27,894	0	0	1856,85	5,074	0	27,894						
	Comp. gl	5416	24027	40920	5416	24027	-40920	10,832	48,054	0	0	1440,069	10,832	0	48,054						
1b	380C1F1	21154	81089	153435	21154	81089	-153435	42,308	162,178	0	0	9244,146	42,308	0	162,178	1b	0	25465,38	143,982	0	547,67
Wind, -20	380C1F2	21176	80570	153109	21176	80570	-153109	42,352	161,14	0	0	7573,58	42,352	0	161,14	Wind angle: 90 dgr					
Permaner	380C1F3	21201	79931	152744	21201	79931	-152744	42,402	159,862	0	0	5914,894	42,402	0	159,862						
Wind angl	GW / opgv	2743	10864	20147	2743	10864	-20147	5,486	21,728	0	0	1447,555	5,486	0	21,728						
	Comp. gl	5717	21381	40649	5717	21381	-40649	11,434	42,762	0	0	1285,205	11,434	0	42,762						
3	380C1F1	23535	98655	172148	23535	98655	-172148	47,07	197,31	0	0	11246,67	47,07	0	197,31	3	0	32378,62	168,508	0	695,946
Wind+ice,	380C1F2	23624	96581	169990	23624	96581	-169990	47,248	193,162	0	0	9078,614	47,248	0	193,162	Wind angle: 90 dgr					
Permaner	380C1F3	23735	94034	167444	23735	94034	-167444	47,47	188,068	0	0	6958,516	47,47	0	188,068						
Wind angl	GW / opgv	4313	21490	34661	4313	21490	-34661	8,626	42,98	0	0	2861,709	8,626	0	42,98						
	Comp. gl	9047	37213	63173	9047	37213	-63173	18,094	74,426	0	0	2233,112	18,094	0	74,426						
4	380C1F1	23560	79841	150926	23560	79841	-150926	47,12	159,682	0	0	9101,874	47,12	0	159,682	4	0	25340,44	162,36	0	545,584
Construction/mainte		23576	79363	150684	23576	79363	-150684	47,152	158,726	0	0	7460,122	47,152	0	158,726	Wind angle: 90 dgr					
Permaner	380C1F3	23595	78773	150417	23595	78773	-150417	47,19	157,546	0	0	5829,202	47,19	0	157,546						
Wind angl	GW / opgv	3409	11654	21731	3409	11654	-21731	6,818	23,308	0	0	1553,525	6,818	0	23,308						
	Comp. gl	7040	23161	44217	7040	23161	-44217	14,08	46,322	0	0	1395,715	14,08	0	46,322						
1a	380C1F1	19687	96377	159684	20743	67763	-132149	40,43	164,14	27,535	1569,495	9355,98	40,43	27,535	164,14	1a	3999,775	25596,64	137,884	82,981	548,758
Wind, 10 (	380C1F2	19796	93154	155834	20746	67608	-132130	40,542	160,762	23,704	1114,088	7555,814	40,542	23,704	160,762	Wind angle: -45 dgr					
Permaner	380C1F3	19939	89154	151163	20750	67414	-132115	40,689	156,568	19,048	704,776	5793,016	40,689	19,048	156,568						
Wind angl	GW / opgv	2514	14843	23770	2709	8987	-17354	5,223	23,83	6,416	426,2149	1586,991	5,223	6,416	23,83						
	Comp. gl	5377	25102	42181	5623	18356	-35903	11	43,458	6,278	185,201	1304,836	11	6,278	43,458						
1b	380C1F1	21118	81945	154021	21301	76315	-151907	42,419	158,26	2,114	120,498	9020,82	42,419	2,114	158,26	1b	299,4449	24883,59	144,313	6,067	535,451
Wind, -20	380C1F2	21144	81333	153596	21302	76275	-151917	42,446	157,608	1,679	78,913	7407,576	42,446	1,679	157,608	Wind angle: -45 dgr					
Permaner	380C1F3	21176	80580	153115	21302	76225	-151932	42,478	156,805	1,183	43,771	5801,785	42,478	1,183	156,805						
Wind angl	GW / opgv	2736	11043	20305	2777	9902	-19653	5,513	20,945	0,652	43,31236	1395,561	5,513	0,652	20,945						
	Comp. gl	5709	21582	40776	5748	20251	-40337	11,457	41,833	0,439	12,9505	1257,847	11,457	0,439	41,833						
3	380C1F1	23391	102069	175833	24247	80606	-158438	47,638	182,675	17,395	991,515	10412,48	47,638	17,395	182,675	3	2889,301	29942,77	170,454	59,79	644,773
Wind+ice,	380C1F2	23493	99626	173181	24249	80482	-158440	47,742	180,108	14,741	692,827	8465,076	47,742	14,741	180,108	Wind angle: -45 dgr					
Permaner	380C1F3	23622	96619	170029	24252	80325	-158448	47,874	176,944	11,581	428,497	6546,928	47,874	11,581	176,944						
Wind angl	GW / opgv	4276	22751	36152	4576	14472	-27966	8,852	37,223	8,186	543,796	2479,443	8,852	8,186	37,223						
0 Comp. gl		8989	38728	64802	9359	29095	-56915	18,348	67,823	7,887	232,6665	2038,851	18,348	7,887	67,823						
4	380C1F1	23533	80626	151368	23668	75348	-149967	47,201	155,974	1,401	79,857	8890,518	47,201	1,401	155,974	4	186,5276	24791,9	162,597	3,735	534,051
Construction/mainte		23553	80064	151046	23668	75309	-149978	47,221	155,373	1,068	50,196	7302,531	47,221	1,068	155,373	Wind angle: -45 dgr					
Permaner	380C1F3	23576	79372	150688	23669	75259	-149994	47,245	154,631	0,694	25,678	5721,347	47,245	0,694	154,631						
Wind angl	GW / opgv	3403	11807	21835	3431	10801	-21458	6,834	22,608	0,377	25,04411	1507,036	6,834	0,377	22,608						
	Comp. gl	7035	23337	44295	7061	22128	-44100	14,096	45,465	0,195	5,7525	1370,467	14,096	0,195	45,465						
1a	380C1F1	15611	56586	106055	15611	56586	-106055	31,222	113,172	0	0	6450,804	31,222	0	113,172	1a	0	17778,27	106,284	0	382,338
Wind, 10 (	380C1F2	15626	56146	105751	15626	56146	-105751	31,252	112,292	0	0	5277,724	31,252	0	112,292	Wind angle: 0 dgr					
Permaner	380C1F3	15645	55605	105407	15645	55605	-105407	31,29	111,21	0	0	4114,77	31,29	0	111,21						
Wind angl	GW / opgv	2027	7680	14077	2027	7680	-14077	4,054	15,36	0	0	1023,442	4,054	0	15,36						
	Comp. gl	4233	15152	28583	4233	15152	-28583	8,466	30,304	0	0	911,535	8,466	0	30,304						
1b	380C1F1	16209	62360	122787	16209	62360	-122787	32,418	124,72	0	0	7109,04	32,418	0	124,72	1b	0	19617,74	110,208	0	422,388
Wind, -20	380C1F2	16211	62267	122779	16211	62267	-122779	32,422	124,534	0	0	5853,098	32,422	0	124,534	Wind angle: 0 dgr					
Permaner	380C1F3	16213	62151	122774	16213	62151	-122774	32,426	124,302	0	0	4599,174	32,426	0	124,302						
Wind angl	GW / opgv	2107	8050	15737	2107	8050	-15737	4,214	16,1	0	0	1072,721	4,214	0	16,1						
	Comp. gl	4364	16366	32269	4364	16366	-32269	8,728	32,732	0	0	983,7046	8,728	0	32,732						
3	380C1F1	19161	69055	132111	19161	69055	-132111	38,322	138,11	0	0	7872,27	38,322	0	138,11	3	0	22803,1	138,822	0	492,624
Wind+ice,	380C1F2	19172	68730	131956	19172	68730	-131956	38,344	137,46	0	0	6460,62	38,344	0	137,46	Wind angle: 0 dgr					
Permaner	380C1F3	19185	68329	131788	19185	68329	-131788	38,37	136,658	0	0	5056,346	38,37	0	136,658						
Wind angl	GW / opgv	3902	13581	25143	3902	13581	-25143	7,804	27,162	0	0	1810,295	7,804	0	27,162						
	Comp. gl	7991	26617	50536	7991	26617	-50536	15,982	53,234	0	0	1603,566	15,982	0	53,234						
4	380C1F1	18641	62516	123099	18641	62516	-123099	37,282	125,032	0	0	7126,824	37,282	0	125,032	4	0	19951,81	128,804	0	430,154
Construction/mainte		18642	62428	123101	18642	62428	-123101	37,284	124,856	0	0	5868,232	37,284	0	124,856	Wind angle: 0 dgr					
Permaner	380C1F3	18644	62318	123107	18644	62318	-123107	37,288	124,636	0	0	4611,532	37,288	0	124,636						

Wind angl	GW / opg	2774	9156	17956	2774	9156	-17956	5,548	18,312	0	0	1220,677	5,548	0	18,312								
	Comp. gl	5701	18659	36867	5701	18659	-36867	11,402	37,318	0	0	1124,54	11,402	0	37,318								
6	380C1F1	15721	52192	104680	15721	52192	-104680	31,442	104,384	0	0	5949,888	31,442	0	104,384	6	0	16475,04	106,944	0	354,978		
Permaner	380C1F2	15721	52192	104680	15721	52192	-104680	31,442	104,384	0	0	4906,048	31,442	0	104,384	0							
Permaner	380C1F3	15721	52192	104680	15721	52192	-104680	31,442	104,384	0	0	3862,208	31,442	0	104,384								
	GW / opg	2052	6800	13639	2052	6800	-13639	4,104	13,6	0	0	906,5629	4,104	0	13,6								
	Comp. gl	4257	14113	28307	4257	14113	-28307	8,514	28,226	0	0	850,3336	8,514	0	28,226								
1a	380C1F1	15691	54064	104673	14545	87568	-142020	30,236	141,632	-37,347	-2128,78	8073,024	30,236	-37,347	141,632	1a	-5453	21979,99	103,178	-113,612	470,476		
Wind, 10	380C1F2	15696	53892	104621	14643	83891	-137260	30,339	137,783	-32,639	-1534,03	6475,801	30,339	-32,639	137,783	Wind angle:	45	dgr					
Permaner	380C1F3	15701	53678	104567	14776	79281	-131365	30,477	132,959	-26,798	-991,526	4919,483	30,477	-26,798	132,959								
Wind angl	GW / opg	2045	7160	13690	1852	13897	-21874	3,897	21,057	-8,184	-543,663	1401,774	3,897	-8,184	21,057								
	Comp. gl	4251	14560	28290	3978	22485	-36934	8,229	37,045	-8,644	-254,998	1109,903	8,229	-8,644	37,045								
1b	380C1F1	16219	61800	122795	15968	68285	-126625	32,187	130,085	-3,83	-218,31	7414,845	32,187	-3,83	130,085	1b	-548,603	20409,75	109,518	-11,234	438,966		
Wind, -20	380C1F2	16219	61759	122802	16003	67551	-125957	32,222	129,31	-3,155	-148,285	6077,57	32,222	-3,155	129,31	Wind angle:	45	dgr					
Permaner	380C1F3	16220	61706	122812	16045	66654	-125187	32,265	128,36	-2,375	-87,875	4749,32	32,265	-2,375	128,36								
Wind angl	GW / opg	2109	7942	15722	2055	9283	-16774	4,164	17,225	-1,052	-69,8844	1147,417	4,164	-1,052	17,225								
	Comp. gl	4366	16232	32276	4314	17754	-33098	8,68	33,986	-0,822	-24,249	1020,598	8,68	-0,822	33,986								
3	380C1F1	19216	67161	131471	18225	91866	-155375	37,441	159,027	-23,904	-1362,53	9064,539	37,441	-23,904	159,027	3	-3859,45	26218,97	135,847	-80,182	564,408		
Wind+ice,	380C1F2	19219	67028	131455	18330	89061	-151995	37,549	156,089	-20,54	-965,38	7336,183	37,549	-20,54	156,089	Wind angle:	45	dgr					
Permaner	380C1F3	19222	66861	131443	18467	85588	-147907	37,689	152,449	-16,464	-609,168	5640,613	37,689	-16,464	152,449								
Wind angl	GW / opg	3926	12879	24770	3618	21852	-34350	7,544	34,731	-9,58	-636,399	2312,906	7,544	-9,58	34,731								
	Comp. gl	8014	25790	50286	7610	36322	-59980	15,624	62,112	-9,694	-285,973	1864,724	15,624	-9,694	62,112								
4	380C1F1	18648	61981	123158	18472	67836	-125718	37,12	129,817	-2,56	-145,92	7399,569	37,12	-2,56	129,817	4	-349,143	20652,69	128,328	-7,105	444,843		
Construction/mainte		18648	61941	123167	18497	67191	-125229	37,145	129,132	-2,062	-96,914	6069,204	37,145	-2,062	129,132	Wind angle:	45	dgr					
Permaner	380C1F3	18648	61890	123180	18527	66400	-124673	37,175	128,29	-1,493	-55,241	4746,73	37,175	-1,493	128,29								
Wind angl	GW / opg	2776	9058	17961	2741	10170	-18553	5,517	19,228	-0,592	-39,3266	1281,503	5,517	-0,592	19,228								
	Comp. gl	5702	18533	36890	5669	19843	-37288	11,371	38,376	-0,398	-11,741	1155,687	11,371	-0,398	38,376								
1a	380C1F1	14684	82412	135359	14684	82412	-135359	29,368	164,824	0	0	9394,968	29,368	0	164,824	1a	0	25398,1	100,5	0	542,066		
Wind, 10	380C1F2	14778	79223	131291	14778	79223	-131291	29,556	158,446	0	0	7446,962	29,556	0	158,446	Wind angle:	90	dgr					
Permaner	380C1F3	14904	75244	126295	14904	75244	-126295	29,808	150,488	0	0	5568,056	29,808	0	150,488								
Wind angl	GW / opg	1870	12910	20551	1870	12910	-20551	3,74	25,82	0	0	1718,061	3,74	0	25,82								
	Comp. gl	4014	21244	35338	4014	21244	-35338	8,028	42,488	0	0	1270,054	8,028	0	42,488								
1b	380C1F1	16017	67261	125701	16017	67261	-125701	32,034	134,522	0	0	7667,754	32,034	0	134,522	1b	0	21066,73	109,062	0	452,742		
Wind, -20	380C1F2	16045	66643	125177	16045	66643	-125177	32,09	133,286	0	0	6264,442	32,09	0	133,286	Wind angle:	90	dgr					
Permaner	380C1F3	16080	65886	124577	16080	65886	-124577	32,16	131,772	0	0	4875,564	32,16	0	131,772								
Wind angl	GW / opg	2065	9066	16541	2065	9066	-16541	4,13	18,132	0	0	1207,643	4,13	0	18,132								
	Comp. gl	4324	17515	32894	4324	17515	-32894	8,648	35,03	0	0	1051,33	8,648	0	35,03								
3	380C1F1	18374	87941	150664	18374	87941	-150664	36,748	175,882	0	0	10025,27	36,748	0	175,882	3	0	28985,96	133,512	0	622,51		
Wind+ice,	380C1F2	18469	85544	147857	18469	85544	-147857	36,938	171,088	0	0	8041,136	36,938	0	171,088	Wind angle:	90	dgr					
Permaner	380C1F3	18592	82587	144489	18592	82587	-144489	37,184	165,174	0	0	6111,438	37,184	0	165,174								
Wind angl	GW / opg	3652	20511	32699	3652	20511	-32699	7,304	41,022	0	0	2730,635	7,304	0	41,022								
	Comp. gl	7669	34672	58078	7669	34672	-58078	15,338	69,344	0	0	2077,474	15,338	0	69,344								
4	380C1F1	18507	66936	125044	18507	66936	-125044	37,014	133,872	0	0	7630,704	37,014	0	133,872	4	0	21249,61	128,02	0	457,378		
Construction/mainte		18528	66390	124666	18528	66390	-124666	37,056	132,78	0	0	6240,66	37,056	0	132,78	Wind angle:	90	dgr					
Permaner	380C1F3	18552	65720	124240	18552	65720	-124240	37,104	131,44	0	0	4863,28	37,104	0	131,44								
Wind angl	GW / opg	2747	9996	18406	2747	9996	-18406	5,494	19,992	0	0	1332,239	5,494	0	19,992								
	Comp. gl	5676	19647	37169	5676	19647	-37169	11,352	39,294	0	0	1182,728	11,352	0	39,294								
1a	380C1F1	14545	87568	142020	15691	54064	-104673	30,236	141,632	37,347	2128,779	8073,024	30,236	37,347	141,632	1a	5452,999	21979,99	103,178	113,612	470,476		
Wind, 10	380C1F2	14643	83891	137260	15696	53892	-104621	30,339	137,783	32,639	1534,033	6475,801	30,339	32,639	137,783	Wind angle:	-45	dgr					
Permaner	380C1F3	14776	79281	131365	15701	53678	-104567	30,477	132,959	26,798	991,526	4919,483	30,477	26,798	132,959								
Wind angl	GW / opg	1852	13897	21874	2045	7160	-13690	3,897	21,057	8,184	543,6631	1401,774	3,897	8,184	21,057								
	Comp. gl	3978	22485	36934	4251	14560	-28290	8,229	37,045	8,644	254,998	1109,903	8,229	8,644	37,045								
1b	380C1F1	15968	68285	126625	16219	61800	-122795	32,187	130,085	3,83	218,31	7414,845	32,187	3,83	130,085	1b	548,6034	20409,75	109,518	11,234	438,966		
Wind, -20	380C1F2	16003	67551	125957	16219	61759	-122802	32,222	129,31	3,155	148,285	6077,57	32,222	3,155	129,31	Wind angle:	-45	dgr					
Permaner	380C1F3	16045	66654	125187	16220	61706	-122812	32,265	128,36	2,375	87,875	4749,32	32,265	2,375	128,36								
Wind angl	GW / opg	2055	9283	16774	2109	7942	-15722	4,164	17,225	1,052	69,88436	1147,417	4,164	1,052	17,225								
	Comp. gl	4314	17754	33098	4366	16232	-32276	8,68	33,986	0,822	24,249	1020,598	8,68	0,822	33,986								
3	380C1F1	18225	91866	155375	19216	67161	-131471	37,441	159,027	23,904	1362,528	9064,539	37,441	23,904	159,027	3	3859,448	26218,97	135,847	80,182	564,408		
Wind+ice,	380C1F2	18330	89061	151995	19219	67028	-131455	37,549	156,089	20,54	965,38	7336,183	37,549	20,54	156,089	Wind angle:	-45	dgr					
Permaner	380C1F3	18467	85588	147907	19222	66861	-131443	37,689	152,449	16,464	609,168	5640,613	37,689	16,464	152,449								
Wind angl	GW / opg	3618	21852	34350	3926	12879	-24770	7,544	34,731	9,58	636,3994	2312,906	7,544	9,58	34,731								
0 Comp. gl		7610	36322	59980	8014	25790	-50286	15,624	62,112	9,694	285,973	1864,724	15,624	9,694	62,112								
4	380C1F1	18472	67836	125718	18648	61981	-123158	37,12	129,817	2,56	145,92	7399,569	37,12	2,56	129,817	4	349,1426	20652,69	128,328	7,105	444,843		
Construction/mainte		18497	67191	125229	18648	61941	-123167	37,145	129,132	2,062	96,914	6069,204	37,145	2,062	129,132	Wind angle:	-45	dgr					
Permaner	380C1F3	18527	66400	124673	18648	61890	-123180	37,175	128,29	1,493	55,241	4746,73	37,175	1,493	128,29								
Wind angl	GW / opg	2741	10170	18553	2776	9058	-17961	5,517	19,228	0,592	39,3266	1281,503	5,517	0,592	19,228								
	Comp. gl	5669	19843	37288	5702	18533	-36890	11,371	38,376	0,398	11,741	1155,687	11,371	0,398	38,376								
		[N]	[N]	[N]	[N]	[N]	[N]																
1a	380C1F1	20683	69972	132902	0	0	0																
Wind, 10	380C1F2	20695	69594	132721	0	0	0																
Permaner	380C1F3	20709	69125	132523	0	0	0																
Wind angl	GW / opg	2695	9433	17592	0	0	0																
	Comp. gl	5610	18878	36057	0	0	0																
1b	380C1F1	21294	76841	151831	0	0	0																
Wind, -20	380C1F2	21296	76755	151836	0	0	0																
Permaner	380C1F3	21297	76647	151847	0	0	0																
Wind angl	GW / opg	2775	10001	19651	0	0	0																
	Comp. gl	5747	20378	40315	0	0	0																
3	380C1F1	24206	82332	158739	0	0	0																
Wind+ice,	380C1F2	24214	82041	158652	0	0	0																
Permaner	380C1F3	24224	81678	158562	0	0	0																
Wind angl	GW / opg	4555	15123	28235	0	0	0																
	Comp. gl	9340	29873	57067	0	0	0																
4	380C1F1	23663	75860	149863	0	0	0																
Construction/mainte		23664	75777	149874	0	0	0																
Permaner	380C1F3	23665	75672	149891	0	0	0																
Wind angl	GW / opg	3430	10895	21444	0	0	0																
	Comp. gl	7060	22249	44069	0	0	0																
6	380C1F1	23267	72548	145509	0	0	0																
Permaner	380C1F2	23267	72548	145509	0	0	0																
Permaner	380C1F3	23267	72548	145509	0	0	0																
	GW / opg	3042	9537	19127	0	0	0																
	Comp. gl	6308	19750	39612	0	0	0																
1a	380C1F1	20743	67763	132149	0	0	0																
Wind, 10	380C1F2	20746	67608	132130	0	0	0																
Permaner	380C1F3	20750	67414	132115	0	0	0																
Wind angl	GW / opg	2709	8987	17354	0	0	0																
	Comp. gl	5623	18356	35903	0	0	0																
1b	380C1F1	21301	76315	151907	0	0	0																
Wind, -20	380C1F2	21302	76275	151917	0	0	0																
Permaner	380C1F3	21302	76225	151932	0	0	0																
Wind angl	GW / opg	2777	9902	19653	0	0	0																
	Comp. gl	5748	20251	40337	0	0	0																
3	380C1F1	24247	80606	158438	0	0	0																
Wind+ice,	380C1F2	24249	80482	158440	0	0	0																
Permaner	380C1F3	24252	80325	158448	0	0	0																
Wind angl	GW / opg	4576	14472	27966	0	0	0																
	Comp. gl	9359	29095	56915	0	0	0																
4	380C1F1	23668	75348	149967	0	0	0																
Construction/mainte		23668	75309	149978	0	0	0																
Permaner	380C1F3	23669	75259	149994	0	0	0																
Wind angl	GW / opg	3431	10801	21458	0	0	0																
	Comp. gl	7061	22128	44100	0	0	0																
1a	380C1F1	19841	91866	154315	0	0	0																
Wind, 10	380C1F2	19941	89104	151105	0	0	0																
Permaner	380C1F3	20069	85690	147242	0	0	0																
Wind angl	GW / opg	2537	13947	22632	0	0	0																
	Comp. gl	5416	24027	40920	0	0	0																
1b	380C1F1	21154	81089	153435	0	0	0																
Wind, -20	380C1F2	21176	80570	153109	0	0	0																
Permaner	380C1F3	21201	79931	152744	0	0	0																
Wind angl	GW / opg	2743	10864	20147	0	0	0																
	Comp. gl	5717	21381	40649	0	0	0																
3	380C1F1	23535	98655	172148	0	0	0																
Wind+ice,	380C1F2	23624	96581	169990	0	0	0																
Permaner	380C1F3	23735	94034	167444	0	0	0																
Wind angl	GW / opg	4313	21490	34661	0	0	0																
	Comp. gl	9047	37213	63173	0	0	0																
4	380C1F1	23560	79841	150926	0	0	0																
Construction/mainte		23576	79363	150684	0	0	0																
Permaner	380C1F3	23595	78773	150417	0	0	0																
Wind angl	GW / opg	3409	11654	21731	0	0	0																
	Comp. gl	7040	23161	44217	0	0	0																
1a	380C1F1	19687	96377	159684	0	0	0																
Wind, 10	380C1F2	19796	93154	155834	0	0	0																
Permaner	380C1F3	19939	89154	151163	0	0	0																
Wind angl	GW / opg	2514	14843	23770	0	0	0																
	Comp. gl	5377	25102	42181	0	0	0																
1b	380C1F1	21118	81945	154021	0	0	0																
Wind, -20	380C1F2	21144	81333	153596	0	0	0																
Permaner	380C1F3	21176	80580	153115	0	0	0																
Wind angl	GW / opg	2736	11043	20305	0	0	0																
	Comp. gl	5709	21582	40776	0	0	0																
3	380C1F1	23391	102069	175833	0	0	0																
Wind+ice,	380C1F2	23493	99626	173181	0	0	0																
Permaner	380C1F3	23622	96619	170029	0	0	0																
Wind angl	GW / opg	4276	22751	36152	0	0	0																
0 Comp. gl		8989	38728	64802	0	0	0																
4	380C1F1	23533	80626	151368	0	0	0																
Construction/mainte		23553	80064	151046	0	0	0																
Permaner	380C1F3	23576	79372	150688	0	0	0																
Wind angl	GW / opg	3403	11807	21835	0	0	0																
	Comp. gl	7035	23337	44295	0	0	0																
1a	380C1F1	15611	56586	106055	0	0	0																
Wind, 10	380C1F2	15626	56146	105751	0	0	0																
Permaner	380C1F3	15645	55605	105407	0	0	0																

Wind ang	GW / opg	2027	7680	14077	0	0	0
	Comp. gl	4233	15152	28583	0	0	0
1b	380C1F1	16209	62360	122787	0	0	0
Wind, -20	380C1F2	16211	62267	122779	0	0	0
Permaner	380C1F3	16213	62151	122774	0	0	0
Wind ang	GW / opg	2107	8050	15737	0	0	0
	Comp. gl	4364	16366	32269	0	0	0
3	380C1F1	19161	69055	132111	0	0	0
Wind+ice,	380C1F2	19172	68730	131956	0	0	0
Permaner	380C1F3	19185	68329	131788	0	0	0
Wind ang	GW / opg	3902	13581	25143	0	0	0
	Comp. gl	7991	26617	50536	0	0	0
4	380C1F1	18641	62516	123099	0	0	0
Construction/mainte		18642	62428	123101	0	0	0
Permaner	380C1F3	18644	62318	123107	0	0	0
Wind ang	GW / opg	2774	9156	17956	0	0	0
	Comp. gl	5701	18659	36867	0	0	0
6	380C1F1	15721	52192	104680	0	0	0
Permaner	380C1F2	15721	52192	104680	0	0	0
Permaner	380C1F3	15721	52192	104680	0	0	0
	GW / opg	2052	6800	13639	0	0	0
	Comp. gl	4257	14113	28307	0	0	0
1a	380C1F1	15691	54064	104673	0	0	0
Wind, 10	380C1F2	15696	53892	104621	0	0	0
Permaner	380C1F3	15701	53678	104567	0	0	0
Wind ang	GW / opg	2045	7160	13690	0	0	0
	Comp. gl	4251	14560	28290	0	0	0
1b	380C1F1	16219	61800	122795	0	0	0
Wind, -20	380C1F2	16219	61759	122802	0	0	0
Permaner	380C1F3	16220	61706	122812	0	0	0
Wind ang	GW / opg	2109	7942	15722	0	0	0
	Comp. gl	4366	16232	32276	0	0	0
3	380C1F1	19216	67161	131471	0	0	0
Wind+ice,	380C1F2	19219	67028	131455	0	0	0
Permaner	380C1F3	19222	66861	131443	0	0	0
Wind ang	GW / opg	3926	12879	24770	0	0	0
	Comp. gl	8014	25790	50286	0	0	0
4	380C1F1	18648	61981	123158	0	0	0
Construction/mainte		18648	61941	123167	0	0	0
Permaner	380C1F3	18648	61890	123180	0	0	0
Wind ang	GW / opg	2776	9058	17961	0	0	0
	Comp. gl	5702	18533	36890	0	0	0
1a	380C1F1	14684	82412	135359	0	0	0
Wind, 10	380C1F2	14778	79223	131291	0	0	0
Permaner	380C1F3	14904	75244	126295	0	0	0
Wind ang	GW / opg	1870	12910	20551	0	0	0
	Comp. gl	4014	21244	35338	0	0	0
1b	380C1F1	16017	67261	125701	0	0	0
Wind, -20	380C1F2	16045	66643	125177	0	0	0
Permaner	380C1F3	16080	65886	124577	0	0	0
Wind ang	GW / opg	2065	9066	16541	0	0	0
	Comp. gl	4324	17515	32894	0	0	0
3	380C1F1	18374	87941	150664	0	0	0
Wind+ice,	380C1F2	18469	85544	147857	0	0	0
Permaner	380C1F3	18592	82587	144489	0	0	0
Wind ang	GW / opg	3652	20511	32699	0	0	0
	Comp. gl	7669	34672	58078	0	0	0
4	380C1F1	18507	66936	125044	0	0	0
Construction/mainte		18528	66390	124666	0	0	0
Permaner	380C1F3	18552	65720	124240	0	0	0
Wind ang	GW / opg	2747	9996	18406	0	0	0
	Comp. gl	5676	19647	37169	0	0	0
1a	380C1F1	14545	87568	142020	0	0	0
Wind, 10	380C1F2	14643	83891	137260	0	0	0
Permaner	380C1F3	14776	79281	131365	0	0	0
Wind ang	GW / opg	1852	13897	21874	0	0	0
	Comp. gl	3978	22485	36934	0	0	0
1b	380C1F1	15968	68285	126625	0	0	0
Wind, -20	380C1F2	16003	67551	125557	0	0	0
Permaner	380C1F3	16045	66654	125187	0	0	0
Wind ang	GW / opg	2055	9283	16774	0	0	0
	Comp. gl	4314	17754	33098	0	0	0
3	380C1F1	18225	91866	155375	0	0	0
Wind+ice,	380C1F2	18330	89061	151995	0	0	0
Permaner	380C1F3	18467	85588	147907	0	0	0
Wind ang	GW / opg	3618	21852	34350	0	0	0
0 Comp. gl		7610	36322	59980	0	0	0
4	380C1F1	18472	67836	125718	0	0	0
Construction/mainte		18497	67191	125229	0	0	0
Permaner	380C1F3	18527	66400	124673	0	0	0
Wind ang	GW / opg	2741	10170	18553	0	0	0
	Comp. gl	5669	19843	37288	0	0	0

W2H400+1 17-02

Hoogte mast	Ber & bijlage	67 m			
Hoogte onderste stroomdraad (F3)		37 m			
		Hoogte		Excentriciteit ophanging t.o.v. hart mast	
Bliksemdraad = GW / CH_{mast} -	0,57 m =	66,43 m		0,759 m	
1e traverse - 380C1F1 F2 +	10 m =	57 m		0 m	
2e traverse - 380C1F2 F3 +	10 m =	47 m		0 m	
3e traverse - 380C1F3		37 m		0 m	
Passieve lijn = Comp C. F3 -	7,5 m =	29,5 m		2,075 m	

Uit mast			Uit lijnen				
ULS (incl bel factoren)			SLS				
N	V	M	Nmin	Nmax	Vmax	Mlangs;max	Mdwars;max
[kN]	[kN]	[kNm]	[kN]	[kN]	[kN]	[kNm]	[kNm]
1003	148	4621	110	210	745	7387	34458

		Belastingen uit lijnen					Belasting uit mast		
			M_{langs}	M_{dwars}	N	V_{langs}	V_{dwars}	N	V	M
SLS	0 deg	1a	0	**19702**	117	0	**424**	836	99	3081
		1b	0	21136	122	0	455	836	99	3081
		3	0	30725	**210**	0	666	836	99	3081
		4	0	20894	137	0	450	836	99	3081
	45 deg	1a	**-7387**	25243	114	**-154**	540	836	99	3081
		1b	-278	21714	121	-6	467	836	99	3081
		3	-1405	32760	209	-29	709	836	99	3081
		4	-176	21425	136	-4	462	836	99	3081
	90 deg	1a	0	29809	**110**	0	636	836	99	3081
		1b	0	22207	121	0	478	836	99	3081
		3	0	**34458**	208	0	**745**	836	99	3081
		4	0	21888	136	0	471	836	99	3081
	-45 deg	1a	**7387**	25243	114	**154**	540	836	99	3081
		1b	278	21714	121	6	467	836	99	3081
		3	1405	32760	209	29	709	836	99	3081
		4	176	21425	136	4	462	836	99	3081

regel		Loadcase	Totaal M_{langs}	M_{dwars}	N	V_{langs}	V_{dwars}	Totaal moment	M langs max	M dwars max	N max	V langs max	V dwars max	M tot max	N min
1 Perm load 1,2	0 deg	1a	3081	22783	953	99	522	22990,34	1						
2 Perm load 1,2	0 deg	1b	3081	24217	958	99	554	24412,15	2						
3 Perm load 1,2	0 deg	3	3081	33806	1046	99	765	33945,63	3		x				
4 Perm load 1,2	0 deg	4	3081	23975	973	99	549	24171,92	4						
5									5						
6 Perm load 1,2	45 deg	1a	10468	28323	949	253	639	30195,9	6 x			x			
7 Perm load 1,2	45 deg	1b	3358	24795	957	104	566	25021,28	7						
8 Perm load 1,2	45 deg	3	4486	35841	1045	127	808	36120,61	8						
9 Perm load 1,2	45 deg	4	3257	24506	972	102	560	24721,47	9						
10									10						
11 Perm load 1,2	90 deg	1a	3081	32890	946	99	734	33033,96	11						x
12 Perm load 1,2	90 deg	1b	3081	25288	957	99	576	25474,84	12						
13 Perm load 1,2	90 deg	3	3081	37539	1043	99	843	37665,02	13	x			x	x	
14 Perm load 1,2	90 deg	4 Construct	3081	24969	972	99	570	25158,47	14						
15									15						
16 Perm load 1,2	-45 deg	1a	9566	28323	949	253	639	29895,08	16			x			
17 Perm load 1,2	-45 deg	1b	2456	24795	957	104	566	24916,21	17						
18 Perm load 1,2	-45 deg	3	3583	35841	1045	127	808	36019,69	18						
19 Perm load 1,2	-45 deg	4	2354	24506	972	102	560	24618,86	19						
			10468	37539	1046	253	843	37665							
					946										

samenvatting

Mast	Bijlage	Wind	Loadcase	M_{langs}	M_{dwars}	N	V_{langs}	V_{dwars}
3 W2H400+1 17-O2		Perm load :0 deg	3	3081	33806	1046	99	765
6 W2H400+1 17-O2		Perm load :45 deg	1a	10468	28323	949	253	639
11 W2H400+1 17-O2		Perm load :90 deg	1a	3081	32890	946	99	734
13 W2H400+1 17-O2		Perm load :90 deg	3	3081	37539	1043	99	843
W2H400+1 17-O2		#N/B #N/B	#N/B	#N/B	#N/B	#N/B	#N/B	#N/B
W2H400+1 17-O2		#N/B #N/B	#N/B	#N/B	#N/B	#N/B	#N/B	#N/B

W2H400+10 TOWER (rev 6.0, date: 05-1 Appendix O2
Loadcases for tower defliction analyses (Servicabilitylimit state)
Loadcase according to 50341-3-15

	Attachmer	AHEAD [N]	[N]	[N]	BACK [N]	[N]	Totaal Vert [kN]	Dwars [kN]	Langs [kN]	
1a	380C1F1 / 17250	62759	116337	17250	62759	-116337	34,5	125,518	0	
Wind, 10 c	380C1F2 / 17273	62165	115888	17273	62165	-115888	34,546	124,33	0	
Permanen	380C1F3 / 17299	61437	115378	17299	61437	-115378	34,598	122,874	0	
Wind angl	GW / opgv2238	8611	15570	2238	8611	-15570	4,476	17,222	0	
	Comp. gl 4681	16798	31374	4681	16798	-31374	9,362	33,596	0	
1b	380C1F1 / 17916	67143	132761	17916	67143	-132761	35,832	134,286	0	
Wind, -20	380C1F2 / 17917	67070	132764	17917	67070	-132764	35,834	134,14	0	
Permanen	380C1F3 / 17919	66979	132771	17919	66979	-132771	35,838	133,958	0	
Wind angl	GW / opgv2332	8681	17072	2332	8681	-17072	4,664	17,362	0	
	Comp. gl 4828	17696	35029	4828	17696	-35029	9,656	35,392	0	
3	380C1F1 / 27288	89496	174174	27288	89496	-174174	54,576	178,992	0	
Wind+ice,	380C1F2 / 27293	89276	174145	27293	89276	-174145	54,586	178,552	0	
Permanen	380C1F3 / 27298	89000	174122	27298	89000	-174122	54,596	178	0	
Wind angl	GW / opgv7707	21838	42052	7707	21838	-42052	15,414	43,676	0	
	Comp. gl 15601	43501	84873	15601	43501	-84873	31,202	87,002	0	
4	380C1F1 / 19850	65611	129687	19850	65611	-129687	39,7	131,222	0	
Constructi	380C1F2 / 19851	65541	129695	19851	65541	-129695	39,702	131,082	0	
Permanen	380C1F3 / 19852	65452	129708	19852	65452	-129708	39,704	130,904	0	
Wind angl	GW / opgv2876	9395	18504	2876	9395	-18504	5,752	18,79	0	
	Comp. gl 5919	19204	38053	5919	19204	-38053	11,838	38,408	0	
1a	380C1F1 / 17366	59372	114259	15930	103600	-164684	33,296	162,972	-50,425	
Wind, 10 c	380C1F2 / 17372	59143	114175	16039	98872	-158556	33,411	158,015	-44,381	
Permanen	380C1F3 / 17379	58859	114086	16190	92907	-150890	33,569	151,766	-36,804	
Wind angl	GW / opgv2264	7909	15002	2030	16696	-25795	4,294	24,605	-10,793	
	Comp. gl 4707	16004	30927	4358	26528	-42738	9,065	42,532	-11,811	
1b	380C1F1 / 17922	66701	132817	17762	71490	-134775	35,684	138,191	-1,958	
Wind, -20	380C1F2 / 17922	66667	132825	17786	70965	-134391	35,708	137,632	-1,566	
Permanen	380C1F3 / 17923	66625	132836	17813	70320	-133957	35,736	136,945	-1,121	
Wind angl	GW / opgv2333	8598	17072	2297	9572	-17661	4,63	18,17	-0,589	
	Comp. gl 4829	17590	35046	4796	18719	-35453	9,625	36,309	-0,407	
3	380C1F1 / 27313	88170	174146	26734	103682	-183882	54,047	191,852	-9,736	
Wind+ice,	380C1F2 / 27314	88072	174159	26811	101936	-182252	54,125	190,008	-8,093	
Permanen	380C1F3 / 27315	87948	174180	26904	99793	-180352	54,219	187,741	-6,172	
Wind angl	GW / opgv7715	21410	42058	7543	26272	-44790	15,258	47,682	-2,732	
	Comp. gl 15608	42956	84956	15434	48721	-86984	31,042	91,677	-2,028	
4	380C1F1 / 19854	65181	129768	19738	69650	-131080	39,592	134,831	-1,312	
Constructi	380C1F2 / 19854	65148	129778	19755	69172	-130790	39,609	134,32	-1,012	
Permanen	380C1F3 / 19855	65107	129790	19775	68582	-130467	39,63	133,689	-0,677	
Wind angl	GW / opgv2877	9317	18514	2853	10169	-18859	5,73	19,486	-0,345	
	Comp. gl 5920	19102	38078	5898	20123	-38268	11,818	39,225	-0,19	
1a	380C1F1 / 16085	96963	156094	16085	96963	-156094	32,17	193,926	0	
Wind, 10 c	380C1F2 / 16192	92831	150793	16192	92831	-150793	32,384	185,662	0	
Permanen	380C1F3 / 16340	87644	144214	16340	87644	-144214	32,68	175,288	0	
Wind angl	GW / opgv2049	15448	24134	2049	15448	-24134	4,098	30,896	0	
	Comp. gl 4400	24915	40650	4400	24915	-40650	8,8	49,83	0	
1b	380C1F1 / 17794	70757	134246	17794	70757	-134246	35,588	141,514	0	
Wind, -20	380C1F2 / 17813	70312	133951	17813	70312	-133951	35,626	140,624	0	
Permanen	380C1F3 / 17835	69766	133620	17835	69766	-133620	35,67	139,532	0	
Wind angl	GW / opgv2304	9417	17520	2304	9417	-17520	4,608	18,834	0	
	Comp. gl 4803	18548	35338	4803	18548	-35338	9,606	37,096	0	
3	380C1F1 / 26841	101243	181625	26841	101243	-181625	53,682	202,486	0	
Wind+ice,	380C1F2 / 26905	99766	180329	26905	99766	-180329	53,81	199,532	0	
Permanen	380C1F3 / 26982	97953	178830	26982	97953	-178830	53,964	195,906	0	
Wind angl	GW / opgv7574	25522	44152	7574	25522	-44152	15,148	51,044	0	
	Comp. gl 15467	47854	86421	15467	47854	-86421	30,934	95,708	0	
4	380C1F1 / 19762	68982	130682	19762	68982	-130682	39,524	137,964	0	
Constructi	380C1F2 / 19775	68575	130463	19775	68575	-130463	39,55	137,15	0	
Permanen	380C1F3 / 19791	68073	130221	19791	68073	-130221	39,582	136,146	0	
Wind angl	GW / opgv2857	10039	18766	2857	10039	-18766	5,714	20,078	0	
	Comp. gl 5902	19974	38197	5902	19974	-38197	11,804	39,948	0	
1a	380C1F1 / 15930	103600	164684	17366	59372	-114259	33,296	162,972	50,425	
Wind, 10 c	380C1F2 / 16039	98872	158556	17372	59143	-114175	33,411	158,015	44,381	
Permanen	380C1F3 / 16190	92907	150890	17379	58859	-114086	33,569	151,766	36,804	
Wind angl	GW / opgv2030	16696	25795	2264	7909	-15002	4,294	24,605	10,793	
	Comp. gl 4358	26528	42738	4707	16004	-30927	9,065	42,532	11,811	
1b	380C1F1 / 17762	71490	134775	17922	66701	-132817	35,684	138,191	1,958	
Wind, -20	380C1F2 / 17786	70965	134391	17922	66667	-132825	35,708	137,632	1,566	
Permanen	380C1F3 / 17813	70320	133957	17923	66625	-132836	35,736	136,945	1,121	
Wind angl	GW / opgv2297	9572	17661	2333	8598	-17072	4,63	18,17	0,589	
	Comp. gl 4796	18719	35453	4829	17590	-35046	9,625	36,309	0,407	
3	380C1F1 / 26734	103682	183882	27313	88170	-174146	54,047	191,852	9,736	
Wind+ice,	380C1F2 / 26811	101936	182252	27314	88072	-174159	54,125	190,008	8,093	
Permanen	380C1F3 / 26904	99793	180352	27315	87948	-174180	54,219	187,741	6,172	
Wind angl	GW / opgv7543	26272	44790	7715	21410	-42058	15,258	47,682	2,732	
	Comp. gl 15434	48721	86984	15608	42956	-84956	31,042	91,677	2,028	
4	380C1F1 / 19738	69650	131080	19854	65181	-129768	39,592	134,831	1,312	
Constructi	380C1F2 / 19755	69172	130790	19854	65148	-129778	39,609	134,32	1,012	
Permanen	380C1F3 / 19775	68582	130467	19855	65107	-129790	39,63	133,689	0,677	
Wind angl	GW / opgv2853	10169	18859	2877	9317	-18514	5,73	19,486	0,345	
	Comp. gl 5898	20123	38268	5920	19102	-38078	11,818	39,225	0,19	

		Belastingen op mastvoet, per lijn M_{langs}	M_{dwars}	N	V_{langs}	V_{dwars}		Belasting op mastvoet, belastinggeval M_{langs}	M_{dwars}	N	V_{langs}	V_{dwars}
1a	380C1F1 / 17250	0	7154,526	34,5	0	125,518	1a	0	19702,34	117,482	0	423,54
Wind, 10 c	380C1F2 / 17273	0	5843,51	34,546	0	124,33	Wind angle: 0 dgr					
Permanen	380C1F3 / 17299	0	4546,338	34,598	0	122,874						
Wind angl	GW / opgv2238	0	1147,455	4,476	0	17,222						
	Comp. gl 4681	0	1010,508	9,362	0	33,596						
1b	380C1F1 / 17916	0	7654,302	35,832	0	134,286	1b	0	21136,33	121,824	0	455,138
Wind, -20	380C1F2 / 17917	0	6304,58	35,834	0	134,14	Wind angle: 0 dgr					
Permanen	380C1F3 / 17919	0	4956,446	35,838	0	133,958						
Wind angl	GW / opgv2332	0	1156,898	4,664	0	17,362						
	Comp. gl 4828	0	1064,1	9,656	0	35,392						
3	380C1F1 / 27288	0	10202,54	54,576	0	178,992	3	0	30724,89	210,374	0	666,222
Wind+ice,	380C1F2 / 27293	0	8391,944	54,586	0	178,552	Wind angle: 0 dgr					
Permanen	380C1F3 / 27298	0	6586	54,596	0	178						
Wind angl	GW / opgv7707	0	2913,096	15,414	0	43,676						
	Comp. gl 15601	0	2631,303	31,202	0	87,002						
4	380C1F1 / 19850	0	7479,654	39,7	0	131,222	4	0	20894,14	136,696	0	450,406
Constructi	380C1F2 / 19851	0	6160,854	39,702	0	131,082	Wind angle: 0 dgr					
Permanen	380C1F3 / 19852	0	4843,448	39,704	0	130,904						
Wind angl	GW / opgv2876	0	1252,585	5,752	0	18,79						
	Comp. gl 5919	0	1157,6	11,838	0	38,408						
1a	380C1F1 / 17366	-2874,23	9289,404	33,296	-50,425	162,972	1a	-7387,28	25242,72	113,635	-154,214	539,89
Wind, 10 c	380C1F2 / 17372	-2085,91	7426,705	33,411	-44,381	158,015	Wind angle: 45 dgr					
Permanen	380C1F3 / 17379	-1361,75	5615,342	33,569	-36,804	151,766						
Wind angl	GW / opgv2264	-716,979	1637,769	4,294	-10,793	24,605						
	Comp. gl 4707	-348,425	1273,504	9,065	-11,811	42,532						
1b	380C1F1 / 17922	-111,606	7876,887	35,684	-1,958	138,191	1b	-277,819	21714,19	121,383	-5,641	467,247
Wind, -20	380C1F2 / 17922	-73,602	6468,704	35,708	-1,566	137,632	Wind angle: 45 dgr					
Permanen	380C1F3 / 17923	-41,477	5066,965	35,736	-1,121	136,945						
Wind angl	GW / opgv2333	-39,1273	1210,547	4,63	-0,589	18,17						
	Comp. gl 4829	-12,0065	1091,087	9,625	-0,407	36,309						
3	380C1F1 / 27313	-554,952	10935,56	54,047	-9,736	191,852	3	-1405	32760,34	208,691	-28,761	708,96
Wind+ice,	380C1F2 / 27314	-380,371	8930,376	54,125	-8,093	190,008	Wind angle: 45 dgr					
Permanen	380C1F3 / 27315	-228,364	6946,417	54,219	-6,172	187,741						
Wind angl	GW / opgv7715	-181,487	3179,096	15,258	-2,732	47,682						
	Comp. gl 15608	-59,826	2768,884	31,042	-2,028	91,677						
4	380C1F1 / 19854	-74,784	7685,367	39,592	-1,312	134,831	4	-175,92	21425,36	136,379	-3,536	461,551
Constructi	380C1F2 / 19854	-47,564	6313,04	39,609	-1,012	134,32	Wind angle: 45 dgr					
Permanen	380C1F3 / 19855	-25,049	4946,493	39,63	-0,677	133,689						
Wind angl	GW / opgv2877	-22,9184	1298,804	5,73	-0,345	19,486						
	Comp. gl 5920	-5,605	1181,66	11,818	-0,19	39,225						
1a	380C1F1 / 16085	0	11053,78	32,17	0	193,926	1a	0	29809,33	110,132	0	635,602
Wind, 10 c	380C1F2 / 16192	0	8726,114	32,384	0	185,662	Wind angle: 90 dgr					
Permanen	380C1F3 / 16340	0	6485,656	32,68	0	175,288						
Wind angl	GW / opgv2049	0	2055,532	4,098	0	30,896						
	Comp. gl 4400	0	1488,245	8,8	0	49,83						
1b	380C1F1 / 17794	0	8066,298	35,588	0	141,514	1b	0	22207,21	121,098	0	477,6
Wind, -20	380C1F2 / 17813	0	6609,328	35,626	0	140,624	Wind angle: 90 dgr					
Permanen	380C1F3 / 17835	0	5162,684	35,67	0	139,532						
Wind angl	GW / opgv2304	0	1254,64	4,608	0	18,834						
	Comp. gl 4803	0	1114,264	9,606	0	37,096						
3	380C1F1 / 26841	0	11541,7	53,682	0	202,486	3	0	34458,15	207,538	0	744,676
Wind+ice,	380C1F2 / 26905	0	9378,004	53,81	0	199,532	Wind angle: 90 dgr					
Permanen	380C1F3 / 26982	0	7248,522	53,964	0	195,906						
Wind angl	GW / opgv7574	0	3402,35	15,148	0	51,044						
	Comp. gl 15467	0	2887,574	30,934	0	95,708						
4	380C1F1 / 19762	0	7863,948	39,524	0	137,964	4	0	21888,48	136,174	0	471,286
Constructi	380C1F2 / 19775	0	6446,05	39,55	0	137,15	Wind angle: 90 dgr					
Permanen	380C1F3 / 19791	0	5037,402	39,582	0	136,146						
Wind angl	GW / opgv2857	0	1338,118	5,714	0	20,078						
	Comp. gl 5902	0	1202,959	11,804	0	39,948						
1a	380C1F1 / 15930	2874,225	9289,404	33,296	50,425	162,972	1a	7387,283	25242,72	113,635	154,214	539,89
Wind, 10 c	380C1F2 / 16039	2085,907	7426,705	33,411	44,381	158,015	Wind angle: -45 dgr					
Permanen	380C1F3 / 16190	1361,748	5615,342	33,569	36,804	151,766						
Wind angl	GW / opgv2030	716,979	1637,769	4,294	10,793	24,605						
	Comp. gl 4358	348,4245	1273,504	9,065	11,811	42,532						
1b	380C1F1 / 17762	111,606	7876,887	35,684	1,958	138,191	1b	277,8188	21714,19	121,383	5,641	467,247
Wind, -20	380C1F2 / 17786	73,602	6468,704	35,708	1,566	137,632	Wind angle: -45 dgr					
Permanen	380C1F3 / 17813	41,477	5066,965	35,736	1,121	136,945						
Wind angl	GW / opgv2297	39,12727	1210,547	4,63	0,589	18,17						
	Comp. gl 4796	12,0065	1091,087	9,625	0,407	36,309						
3	380C1F1 / 26734	554,952	10935,56	54,047	9,736	191,852	3	1405	32760,34	208,691	28,761	708,96
Wind+ice,	380C1F2 / 26811	380,371	8930,376	54,125	8,093	190,008	Wind angle: -45 dgr					
Permanen	380C1F3 / 26904	228,364	6946,417	54,219	6,172	187,741						
Wind angl	GW / opgv7543	181,4868	3179,096	15,258	2,732	47,682						
	Comp. gl 15434	59,826	2768,884	31,042	2,028	91,677						
4	380C1F1 / 19738	74,784	7685,367	39,592	1,312	134,831	4	175,9204	21425,36	136,379	3,536	461,551
Constructi	380C1F2 / 19755	47,564	6313,04	39,609	1,012	134,32	Wind angle: -45 dgr					
Permanen	380C1F3 / 19775	25,049	4946,493	39,63	0,677	133,689						
Wind angl	GW / opgv2853	22,91835	1298,804	5,73	0,345	19,486						
	Comp. gl 5898	5,605	1181,66	11,818	0,19	39,225						

W2H400+117A-AM

Hoogte mast	Ber & bijlage	67 m
Hoogte onderste stroomdraad (F3)		37 m

		Hoogte	Excentriciteit ophanging t.o.v. hart mast
Bliksemdraad = GW / tH_{mast} -	0,57 m =	66,43 m	0,759 m
1e traverse - 380C1F1 F2 +	10 m =	57 m	0 m
2e traverse - 380C1F2 F3 +	10 m =	47 m	0 m
3e traverse - 380C1F3		37 m	0 m
Passieve lijn = Comp C F3 -	7,5 m =	29,5 m	2,075 m

Uit mast (excl belastingsfactoren) N [kN]	V [kN]	M [kNm]	Uit lijnen (incl belastingsfactoren) Nmin [kN]	Nmax [kN]	Vmax [kN]	Mlangs;ma [kNm]	Mdwars;max [kNm]
1003	148	4614	91	255	849	14948	40260
1003	148	4614	95	164	633	20252	30040
1003	148	4614	91	255	849	20252	40260

Belastingen uit lijnen / Belasting uit mast / Totaal

				M_{langs}	M_{dwars}	N	V_{langs}	V_{dwars}	N	V	M	Loadcase	M_{langs}	M_{dwars}	N	V_{langs}	V_{dwars}	Totaal moment
Perm load 1,2	0 deg	1a		1096	21535	134	37	456	1003	148	4614	1a	5710	21535	1137	185	456	22278,76
		1b		1205	22404	139	41	476	1003	28	865	1b	2070	22404	1142	69	476	22499,37
			3	3267	34528	**255**	111	731	1003	42	1298	3	4565	34528	1258	152	731	34828,57
			4	1371	22877	161	46	485	1003	28	865	4	2236	22877	1164	74	485	22986,37
			6	1183	21147	152	40	449				6						
	45 deg	1a		-9943	29580	129	-187	620	1003	148	4614	1a	13206	32843	1132	292	724	35398,17
		1b		680	23298	138	30	494	1003	28	865	1b	1292	23909	1141	50	513	23944,12
			3	1181	37422	253	69	789	1003	42	1298	3	2098	38340	1256	99	818	38396,92
			4	1029	23691	160	40	502	1003	28	865	4	1641	24302	1163	59	522	24357,79
	90 deg	1a		1574	37313	124	53	783	1003	148	4614	1a	1574	41927	1127	53	931	41956,87
		1b		1225	24156	138	42	512	1003	28	865	1b	1225	25021	1141	42	540	25051,02
			3	3338	**40260**	251	113	**849**	1003	42	1298	3	3338	41558	1254	113	890	41691,36
			4	1381	24481	160	47	519	1003	28	865	4	1381	25346	1163	47	546	25384
	-45 deg	1a		12656	30031	129	279	635	1003	148	4614	1a	15919	33294	1132	384	740	36903,78
		1b		1754	23348	138	52	495	1003	28	865	1b	2366	23959	1141	72	515	24075,76
			3	5442	37660	253	155	797	1003	42	1298	3	6359	38577	1256	185	826	39097,97
			4	1725	23735	160	54	504	1003	28	865	4	2337	24347	1163	73	523	24458,64
Perm load 0,9	0 deg	1a		883	17817	101	30	377	752	148	4614	1a	5497	17817	853	178	377	18645,95
		1b		964	18176	106	33	386	752	28	865	1b	1830	18176	858	60	386	18268,07
			3	3119	31172	223	106	659	752	42	1298	3	4416	31172	975	147	659	31483,37
			4	1159	19030	128	39	404	752	28	865	4	2024	19030	880	67	404	19137,38
			6	846	**15202**	103	29	**323**				6						
	45 deg	1a		**-12553**	26805	97	**-244**	560	752	148	4614	1a	15815	30067	849	349	665	33972,95
		1b		92	19223	105	15	407	752	28	865	1b	704	19835	857	35	427	19847,01
			3	490	34303	221	53	722	752	42	1298	3	1408	35221	973	82	752	35248,85
			4	603	19938	127	28	422	752	28	865	4	1215	20549	880	48	442	20585,31
	90 deg	1a		1472	35595	**91**	50	746	752	148	4614	1a	1472	40209	843	50	894	40235,47
		1b		999	20210	104	34	428	752	28	865	1b	999	21075	856	34	456	21098,38
			3	3200	37341	218	108	786	752	42	1298	3	3200	38639	970	108	828	38770,89
			4	1175	20806	127	40	441	752	28	865	4	1175	21671	879	40	468	21702,48
	-45 deg	1a		**14948**	27314	96	**325**	577	752	148	4614	1a	18211	30577	848	430	682	35589,11
		1b		1877	19281	105	51	409	752	28	865	1b	2489	19892	857	71	429	20047,38
			3	5847	34547	220	162	731	752	42	1298	3	6765	35465	973	191	760	36103,94
			4	1735	19986	127	51	424	752	28	865	4	2347	20597	880	71	443	20730,66
												Max	18211	41927	1258	430	931	41957

samenvatting

regel	Mast	Bijlage		Wind	Loadcase	M_{langs}	M_{dwars}	N	V_{langs}	V_{dwars}
1										
2										
3										
4										
5										
6										
7										
8										
9										
10										
11										
12	x		x	x						
13										
14										
15										
16										
17										
18										
19										
20										
21										
22										
23										
24										
25										
26										
27										
28										
29										
30										
31										
32										
33										
34										
35										
36										
37										
38	x		x							
39										
40										
41										
3	W2H400+117A-AM	Perm load	0 deg		3	4565	34528	1258	152	731
12	W2H400+117A-AM	Perm load	90 deg	1a		1574	41927	1127	53	931
38	W2H400+117A-AM	Perm load	-45 deg	1a		18211	30577	848	430	682

W2H400A+10 TOWER (rev 8.0, date: 2

AppendixAM

Loadcases for tower strength (ultimatelimitstate)

Loadcase acs Attachment point

		AHEAD			BACK		
		[N]	[N]	[N]	[N]	[N]	[N]
1a	380C1F1 / 3B/20535	70457	137541	20535	70457	-137541	
Wind, 10 dgr	380C1F2 / 3B/20567	69654	136873	20567	69654	-136873	
Permanent lo	380C1F3 / 3B/20605	68667	136107	20605	68667	-136107	
Wind angle 0	GW / opgw	2662	9796	18589	2662	9796	-18589
	Comp. gl	5579	18864	37162			
1b	380C1F1 / 3B/21292	72977	153790	21292	72977	-153790	
Wind, -20 dgr	380C1F2 / 3B/21293	72878	153790	21293	72878	-153790	
Permanent lo	380C1F3 / 3B/21296	72754	153794	21296	72754	-153794	
Wind angle 0	GW / opgw	2774	9509	19910	2774	9509	-19910
	Comp. gl	5746	19348	40834			
3	380C1F1 / 3B/35343	104308	216117	35343	104308	-216117	
Wind+ice, -5	380C1F2 / 3B/35350	104016	216079	35350	104016	-216079	
Permanent lo	380C1F3 / 3B/35357	103650	216048	35357	103650	-216048	
Wind angle 0	GW / opgw	10767	26780	54943	10767	26780	-54943
	Comp. gl	21759	53218	110749			
4	380C1F1 / 3B/24366	73760	155468	24366	73760	-155468	
Construction	380C1F2 / 3B/24367	73665	155476	24367	73665	-155476	
Permanent lo	380C1F3 / 3B/24369	73546	155489	24369	73546	-155489	
Wind angle 0	GW / opgw	10784	22642	3606	10784	-22642	
	Comp. gl	7412	21973	46464			
6	380C1F1 / 3B/23267	68714	147358	23267	68714	-147358	
Permanent, +	380C1F2 / 3B/23267	68714	147358	23267	68714	-147358	
Permanent lo	380C1F3 / 3B/23267	68714	147358	23267	68714	-147358	
	GW / opgw	3042	9033	19370	3042	9033	-19370
	Comp. gl	6308	18706	40115			
1a	380C1F1 / 3B/20662	67118	135058	18727	130892	-213646	
Wind, 10 dgr	380C1F2 / 3B/20676	66676	134801	18849	124298	-204724	
Permanent lo	380C1F3 / 3B/20694	66130	134514	19025	115903	-193407	
Wind angle 4	GW / opgw	2690	9102	17936	2393	21512	-34167
	Comp. gl	5606	18081	36618			
1b	380C1F1 / 3B/21299	72551	153812	21031	79758	-157648	
Wind, -20 dgr	380C1F2 / 3B/21299	72490	153820	21069	78952	-156960	
Permanent lo	380C1F3 / 3B/21300	72414	153833	21114	77961	-156170	
Wind angle 4	GW / opgw	2776	9428	19903	2717	10900	-20986
	Comp. gl	5747	19246	40842			
3	380C1F1 / 3B/35368	103053	216039	34506	125330	-231326	
Wind+ice, -5	380C1F2 / 3B/35371	102877	216046	34616	122818	-228850	
Permanent lo	380C1F3 / 3B/35374	102654	216063	34753	119723	-225945	
Wind angle 4	GW / opgw	10774	26383	54949	10537	33112	-58712
	Comp. gl	21766	52709	110823			
4	380C1F1 / 3B/24371	73349	155521	24179	79984	-158123	
Construction	380C1F2 / 3B/24371	73290	155533	24207	79259	-157612	
Permanent lo	380C1F3 / 3B/24372	73215	155550	24240	78367	-157033	
Wind angle 4	GW / opgw	3607	10709	22648	3568	11965	-23268
	Comp. gl	7413	21876	46482			
1a	380C1F1 / 3B/18836	124973	205636	18836	124973	-205636	
Wind, 10 dgr	380C1F2 / 3B/18960	118865	197393	18960	118865	-197393	
Permanent lo	380C1F3 / 3B/19137	111112	186984	19137	111112	-186984	
Wind angle 9	GW / opgw	2405	20427	32676	2405	20427	-32676
	Comp. gl	5154	31950	53370			
1b	380C1F1 / 3B/21065	79033	157027	21065	79033	-157027	
Wind, -20 dgr	380C1F2 / 3B/21099	78306	156438	21099	78306	-156438	
Permanent lo	380C1F3 / 3B/21139	77413	155754	21139	77413	-155754	
Wind angle 9	GW / opgw	2724	10748	20826	2724	10748	-20826
	Comp. gl	5698	20776	41529			
3	380C1F1 / 3B/34605	123071	229096	34605	123071	-229096	
Wind+ice, -5	380C1F2 / 3B/34705	120802	226938	34705	120802	-226938	
Permanent lo	380C1F3 / 3B/34828	118007	224416	34828	118007	-224416	
Wind angle 9	GW / opgw	10564	32447	58144	10564	32447	-58144
	Comp. gl	21553	60006	113147			
4	380C1F1 / 3B/24204	79332	157662	24204	79332	-157662	
Construction	380C1F2 / 3B/24228	78678	157228	24228	78678	-157228	
Permanent lo	380C1F3 / 3B/24257	77871	156739	24257	77871	-156739	
Wind angle 9	GW / opgw	3573	11840	23166	3573	11840	-23166
	Comp. gl	7381	23236	46801			
1a	380C1F1 / 3B/18727	130892	213646	20662	67118	-135058	
Wind, 10 dgr	380C1F2 / 3B/18849	124298	204724	20676	66676	-134801	
Permanent lo	380C1F3 / 3B/19025	115903	193407	20694	66130	-134514	
Wind angle -4	GW / opgw	2393	21512	34167	2690	9102	-17936
	Comp. gl	5123	33407	55358			
1b	380C1F1 / 3B/21031	79758	157648	21299	72551	-153812	
Wind, -20 dgr	380C1F2 / 3B/21069	78952	156960	21299	72490	-153820	
Permanent lo	380C1F3 / 3B/21114	77961	156170	21300	72414	-153833	
Wind angle -4	GW / opgw	2717	10900	20986	2776	9428	-19903
	Comp. gl	5691	20946	41666			
3	380C1F1 / 3B/34506	125330	231326	35368	103053	-216039	
Wind+ice, -5	380C1F2 / 3B/34616	122818	228850	35371	102877	-216046	
Permanent lo	380C1F3 / 3B/34753	119723	225945	35374	102654	-216063	
Wind angle -4	GW / opgw	10537	33112	58712	10774	26383	-54949
0 Comp. gl		21522	60787	113655			
4	380C1F1 / 3B/24179	79984	158123	24371	73349	-155521	
Construction	380C1F2 / 3B/24207	79259	157612	24371	73290	-155533	
Permanent lo	380C1F3 / 3B/24240	78367	157033	24372	73215	-155550	
Wind angle -4	GW / opgw	3568	11965	23268	3607	10709	-22648
	Comp. gl	7376	23380	46883			
1a	380C1F1 / 3B/15422	58488	111876	15422	58488	-111876	
Wind, 10 dgr	380C1F2 / 3B/15461	57534	110885	15461	57534	-110885	
Permanent lo	380C1F3 / 3B/15509	56365	109729	15509	56365	-109729	
Wind angle 0	GW / opgw	1988	8291	15363	1988	8291	-15363
	Comp. gl	4191	15495	29938			
1b	380C1F1 / 3B/16205	59272	124401	16205	59272	-124401	
Wind, -20 dgr	380C1F2 / 3B/16208	59166	124383	16208	59166	-124383	
Permanent lo	380C1F3 / 3B/16211	59032	124367	16211	59032	-124367	
Wind angle 0	GW / opgw	2106	7664	15952	2106	7664	-15952
	Comp. gl	4364	15551	32691			
3	380C1F1 / 3B/30398	93212	192322	30398	93212	-192322	
Wind+ice, -5	380C1F2 / 3B/30406	92905	192253	30406	92905	-192253	
Permanent lo	380C1F3 / 3B/30415	92522	192185	30415	92522	-192185	
Wind angle 0	GW / opgw	10139	25649	52518	10139	25649	-52518
	Comp. gl	20458	50870	105713			
4	380C1F1 / 3B/19350	61249	128638	19350	61249	-128638	
Construction	380C1F2 / 3B/19352	61149	128635	19352	61149	-128635	
Permanent lo	380C1F3 / 3B/19354	61024	128636	19354	61024	-128636	

	Totaal Vert [kN]	Dwars [kN]	Langs [kN]	Belastingen op mastvoet, per lijn M_{langs}	M_{dwars}	N	V_{langs}	V_{dwars}
1a	41,07	140,914	0	0	8032,098	41,07	0	140,914
	41,134	139,308	0	0	6547,476	41,134	0	139,308
	41,21	137,334	0	0	5081,358	41,21	0	137,334
	5,324	19,592	0	0	1305,537	5,324	0	19,592
	5,578	18,864	37,162	1096,279	568,0624	5,578	37,162	18,864
1b	42,584	145,954	0	0	8319,378	42,584	0	145,954
	42,586	145,756	0	0	6850,532	42,586	0	145,756
	42,592	145,508	0	0	5383,796	42,592	0	145,508
	5,548	19,018	0	0	1267,577	5,548	0	19,018
	5,746	19,348	40,834	1204,603	582,689	5,746	40,834	19,348
3	70,686	208,616	0	0	11891,11	70,686	0	208,616
	70,7	208,032	0	0	9777,504	70,7	0	208,032
	70,714	207,3	0	0	7670,1	70,714	0	207,3
	21,534	53,56	0	0	3574,335	21,534	0	53,56
	21,759	53,218	110,749	3267,096	1615,081	21,759	110,749	53,218
4	48,732	147,52	0	0	8408,64	48,732	0	147,52
	48,734	147,33	0	0	6924,51	48,734	0	147,33
	48,738	147,092	0	0	5442,404	48,738	0	147,092
	7,212	21,568	0	0	1438,236	7,212	0	21,568
	7,412	21,973	46,464	1370,688	663,5834	7,412	46,464	21,973
6	46,534	137,428	0	0	7833,396	46,534	0	137,428
	46,534	137,428	0	0	6459,116	46,534	0	137,428
	46,534	137,428	0	0	5084,836	46,534	0	137,428
	6,084	18,066	0	0	1204,742	6,084	0	18,066
	6,308	18,706	40,115	1183,393	564,9161	6,308	40,115	18,706
1a	39,389	198,01	-78,588	-4479,52	11286,57	39,389	-78,588	198,01
	39,525	190,974	-69,923	-3286,38	8975,778	39,525	-69,923	190,974
	39,719	182,033	-58,893	-2179,04	6735,221	39,719	-58,893	182,033
	5,083	30,614	-16,231	-1078,23	2037,546	5,083	-16,231	30,614
	5,606	18,081	36,618	1080,231	545,022	5,606	36,618	18,081
1b	42,33	152,309	-3,836	-218,652	8681,613	42,33	-3,836	152,309
	42,368	151,442	-3,14	-147,58	7117,774	42,368	-3,14	151,442
	42,414	150,375	-2,337	-86,469	5563,875	42,414	-2,337	150,375
	5,493	20,328	-1,083	-71,9437	1354,558	5,493	-1,083	20,328
	5,747	19,246	40,842	1204,839	579,682	5,747	40,842	19,246
3	69,874	228,383	-15,287	-871,359	13017,83	69,874	-15,287	228,383
	69,987	225,695	-12,804	-601,788	10607,67	69,987	-12,804	225,695
	70,127	222,377	-9,882	-365,634	8227,949	70,127	-9,882	222,377
	21,311	59,495	-3,763	-249,976	3968,428	21,311	-3,763	59,495
	21,766	52,709	110,823	3269,279	1600,08	21,766	110,823	52,709
4	48,55	153,333	-2,602	-148,314	8739,981	48,55	-2,602	153,333
	48,578	152,549	-2,079	-97,713	7169,803	48,578	-2,079	152,549
	48,612	151,582	-1,483	-54,871	5608,534	48,612	-1,483	151,582
	7,175	22,674	-0,62	-41,1866	1511,68	7,175	-0,62	22,674
	7,413	21,876	46,482	1371,219	660,724	7,413	46,482	21,876
1a	37,672	249,946	0	0	14246,92	37,672	0	249,946
	37,92	237,73	0	0	11173,31	37,92	0	237,73
	38,274	222,224	0	0	8222,288	38,274	0	222,224
	4,81	40,854	0	0	2717,582	4,81	0	40,854
	5,154	31,95	53,37	1574,415	953,2196	5,154	53,37	31,95
1b	42,13	158,066	0	0	9009,762	42,13	0	158,066
	42,198	156,612	0	0	7360,764	42,198	0	156,612
	42,278	154,826	0	0	5728,562	42,278	0	154,826
	5,448	21,496	0	0	1432,114	5,448	0	21,496
	5,698	20,776	41,529	1225,106	624,7154	5,698	41,529	20,776
3	69,21	246,142	0	0	14030,09	69,21	0	246,142
	69,41	241,604	0	0	11355,39	69,41	0	241,604
	69,656	236,014	0	0	8732,518	69,656	0	236,014
	21,128	64,894	0	0	4326,945	21,128	0	64,894
	21,553	60,006	113,147	3337,837	1814,899	21,553	113,147	60,006
4	48,408	158,664	0	0	9043,848	48,408	0	158,664
	48,456	157,356	0	0	7395,732	48,456	0	157,356
	48,514	155,742	0	0	5762,454	48,514	0	155,742
	7,146	23,68	0	0	1578,486	7,146	0	23,68
	7,381	23,236	46,801	1380,63	700,7776	7,381	46,801	23,236
1a	39,389	198,01	78,588	4479,516	11286,57	39,389	78,588	198,01
	39,525	190,974	69,923	3286,381	8975,778	39,525	69,923	190,974
	39,719	182,033	58,893	2179,041	6735,221	39,719	58,893	182,033
	5,083	30,614	16,231	1078,225	2037,546	5,083	16,231	30,614
	5,123	33,407	55,358	1633,061	996,1367	5,123	55,358	33,407
1b	42,33	152,309	3,836	218,652	8681,613	42,33	3,836	152,309
	42,368	151,442	3,14	147,58	7117,774	42,368	3,14	151,442
	42,414	150,375	2,337	86,469	5563,875	42,414	2,337	150,375
	5,493	20,328	1,083	71,94369	1354,558	5,493	1,083	20,328
	5,691	20,946	41,666	1229,147	629,7158	5,691	41,666	20,946
3	69,874	228,383	15,287	871,359	13017,83	69,874	15,287	228,383
	69,987	225,695	12,804	601,788	10607,67	69,987	12,804	225,695
	70,127	222,377	9,882	365,634	8227,949	70,127	9,882	222,377
	21,311	59,495	3,763	249,9761	3968,428	21,311	3,763	59,495
	21,522	60,787	113,655	3352,823	1837,875	21,522	113,655	60,787
4	48,55	153,333	2,602	148,314	8739,981	48,55	2,602	153,333
	48,578	152,549	2,079	97,713	7169,803	48,578	2,079	152,549
	48,612	151,582	1,483	54,871	5608,534	48,612	1,483	151,582
	7,175	22,674	0,62	41,1866	1511,68	7,175	0,62	22,674
	7,376	23,38	46,883	1383,049	705,0152	7,376	46,883	23,38
1a	30,844	116,976	0	0	6667,632	30,844	0	116,976
	30,922	115,068	0	0	5408,196	30,922	0	115,068
	31,018	112,73	0	0	4171,01	31,018	0	112,73
	3,976	16,582	0	0	1104,56	3,976	0	16,582
	4,191	15,495	29,938	883,171	465,7988	4,191	29,938	15,495
1b	32,41	118,544	0	0	6757,008	32,41	0	118,544
	32,416	118,332	0	0	5561,604	32,416	0	118,332
	32,422	118,064	0	0	4368,368	32,422	0	118,064
	4,212	15,328	0	0	1021,436	4,212	0	15,328
	4,364	15,551	32,691	964,3845	467,8098	4,364	32,691	15,551
3	60,796	186,424	0	0	10636,17	60,796	0	186,424
	60,812	185,81	0	0	8733,07	60,812	0	185,81
	60,83	185,044	0	0	6846,628	60,83	0	185,044
	20,278	51,298	0	0	3423,117	20,278	0	51,298
	20,458	50,87	105,713	3118,534	1543,115	20,458	105,713	50,87
4	38,7	122,498	0	0	6982,386	38,7	0	122,498
	38,704	122,298	0	0	5748,006	38,704	0	122,298
	38,708	122,048	0	0	4515,776	38,708	0	122,048

Belasting op mastvoet, belastinggeval

		M_{langs}	M_{dwars}	N	V_{langs}	V_{dwars}
1a		1096,279	21534,53	134,316	37,162	456,012
Wind angle: 0 dgr						
1b		1204,603	22403,97	139,056	40,834	475,584
Wind angle: 0 dgr						
	3	3267,096	34528,13	255,393	110,749	730,726
Wind angle: 0 dgr						
	4	1370,688	22877,37	160,828	46,464	485,483
Wind angle: 0 dgr						
	6	1183,393	21147,01	151,994	40,115	449,056
0						
1a		-9942,93	29580,14	129,322	-187,017	619,712
Wind angle: 45 dgr						
1b		680,1943	23297,5	138,352	30,446	493,7
Wind angle: 45 dgr						
	3	1180,521	37421,95	253,065	69,087	788,659
Wind angle: 45 dgr						
	4	1029,134	23690,72	160,328	39,698	502,014
Wind angle: 45 dgr						
1a		1574,415	37313,32	123,83	53,37	782,704
Wind angle: 90 dgr						
1b		1225,106	24155,92	137,752	41,529	511,776
Wind angle: 90 dgr						
	3	3337,837	40259,84	250,957	113,147	848,66
Wind angle: 90 dgr						
	4	1380,63	24481,3	159,905	46,801	518,678
Wind angle: 90 dgr						
1a		12656,22	30031,25	128,839	278,993	635,038
Wind angle: -45 dgr						
1b		1753,792	23347,54	138,296	52,062	495,4
Wind angle: -45 dgr						
	3	5441,58	37659,75	252,821	155,391	796,737
Wind angle: -45 dgr						
	4	1725,133	23735,01	160,291	53,667	503,518
Wind angle: -45 dgr						
1a		883,171	17817,2	100,951	29,938	376,851
Wind angle: 0 dgr						
1b		964,3845	18176,23	105,824	32,691	385,819
Wind angle: 0 dgr						
	3	3118,534	31172,1	223,174	105,713	659,446
Wind angle: 0 dgr						
	4	1158,849	19030,05	128,07	39,283	403,795
Wind angle: 0 dgr						

Wind angle:0	GW / opgw	2951	9163	19166	2951	9163	-19166
	Comp. gl	6056	18625	39283			
6	380C1F1 / 38	15721	49434	106011	15721	49434	-106011
Permanent,+	380C1F2 / 38	15721	49434	106011	15721	49434	-106011
Permanentloa	380C1F3 / 38	15721	49434	106011	15721	49434	-106011
	GW / opgw	2052	6441	13813	2052	6441	-13813
	Comp. gl	4257	13367	28666			
1a	380C1F1 / 38	15582	54545	108098	13806	126006	-203173
Wind, 10 dgr	380C1F2 / 38	15602	54030	107684	13890	119001	-193370
Permanentloa	380C1F3 / 38	15625	53398	107212	14016	110000	-180753
Wind angle:4	GW / opgw	2021	7466	14428	1768	21037	-33148
	Comp. gl	4227	14575	29100			
1b	380C1F1 / 38	16215	58815	124356	15857	67190	-130698
Wind, -20 dgr	380C1F2 / 38	16216	58751	124357	15905	66222	-129664
Permanentloa	380C1F3 / 38	16217	58671	124361	15964	65038	-128458
Wind angle:4	GW / opgw	2108	7575	15928	2034	9312	-17581
	Comp. gl	4366	15442	32684			
3	380C1F1 / 38	30428	91900	192122	29451	116087	-211509
Wind+ice, -5	380C1F2 / 38	30432	91717	192115	29570	113337	-208524
Permanentloa	380C1F3 / 38	30436	91487	192116	29719	109946	-204983
Wind angle:4	GW / opgw	10146	25246	52512	9897	32170	-56692
	Comp. gl	20465	50355	105775			
4	380C1F1 / 38	19357	60818	128650	19112	68193	-132842
Construction/	380C1F2 / 38	19357	60757	128657	19147	67364	-132104
Permanentloa	380C1F3 / 38	19358	60680	128669	19188	66345	-131256
Wind angle:4	GW / opgw	2953	9084	19164	2906	10470	-20062
	Comp. gl	6057	18525	39295			
1a	380C1F1 / 38	13881	119720	194377	13881	119720	-194377
Wind, 10 dgr	380C1F2 / 38	13969	113188	185223	13969	113188	-185223
Permanentloa	380C1F3 / 38	14100	104813	173480	14100	104813	-173480
Wind angle:9	GW / opgw	1776	19912	31571	1776	19912	-31571
	Comp. gl	3796	30324	49885			
1b	380C1F1 / 38	15900	66320	129767	15900	66320	-129767
Wind, -20 dgr	380C1F2 / 38	15943	65450	128869	15943	65450	-128869
Permanentloa	380C1F3 / 38	15996	64385	127826	15996	64385	-127826
Wind angle:9	GW / opgw	2042	9129	17355	2042	9129	-17355
	Comp. gl	4299	17201	33862			
3	380C1F1 / 38	29558	113615	208821	29558	113615	-208821
Wind+ice, -5	380C1F2 / 38	29667	111128	206198	29667	111128	-206198
Permanentloa	380C1F3 / 38	29802	108065	203101	29802	108065	-203101
Wind angle:9	GW / opgw	9924	31483	56078	9924	31483	-56078
	Comp. gl	20237	57832	108487			
4	380C1F1 / 38	19143	67447	132177	19143	67447	-132177
Construction/	380C1F2 / 38	19174	66700	131543	19174	66700	-131543
Permanentloa	380C1F3 / 38	19210	65782	130817	19210	65782	-130817
Wind angle:9	GW / opgw	2911	10328	19925	2911	10328	-19925
	Comp. gl	6017	19993	39846			
1a	380C1F1 / 38	13806	126006	203173	15582	54545	-108098
Wind, 10 dgr	380C1F2 / 38	13890	119001	193370	15602	54030	-107684
Permanentloa	380C1F3 / 38	14016	110000	180753	15625	53398	-107212
Wind angle:-4	GW / opgw	1768	21037	33148	2021	7466	-14428
	Comp. gl	3774	31888	52102			
1b	380C1F1 / 38	15857	67190	130698	16215	58815	-124356
Wind, -20 dgr	380C1F2 / 38	15905	66222	129664	16216	58751	-124357
Permanentloa	380C1F3 / 38	15964	65038	128458	16217	58671	-124361
Wind angle:-4	GW / opgw	2034	9312	17581	2108	7575	-15928
	Comp. gl	4290	17404	34071			
3	380C1F1 / 38	29451	116087	211509	30428	91900	-192122
Wind+ice, -5	380C1F2 / 38	29570	113337	208524	30432	91717	-192115
Permanentloa	380C1F3 / 38	29719	109946	204983	30436	91487	-192116
Wind angle:-4	GW / opgw	9897	32170	56692	10146	25246	-52512
0	Comp. gl	20205	58639	109050			
4	380C1F1 / 38	19112	68193	132842	19357	60818	-128650
Construction/	380C1F2 / 38	19147	67364	132104	19357	60757	-128657
Permanentloa	380C1F3 / 38	19188	66345	131256	19358	60680	-128669
Wind angle:-4	GW / opgw	2906	10470	20062	2953	9084	-19164
	Comp. gl	6011	20153	39963			

5,902	18,326	0	0	1221,876	5,902	0	18,326
6,056	18,625	39,283	1158,849	562,0037	6,056	39,283	18,625
31,442	98,868	0	0	5635,476	31,442	0	98,868
31,442	98,868	0	0	4646,796	31,442	0	98,868
31,442	98,868	0	0	3658,116	31,442	0	98,868
4,104	12,882	0	0	858,8662	4,104	0	12,882
4,257	13,367	28,666	845,647	403,1598	4,257	28,666	13,367
29,388	180,551	-95,075	-5419,28	10291,41	29,388	-95,075	180,551
29,492	173,031	-85,686	-4027,24	8132,457	29,492	-85,686	173,031
29,641	163,398	-73,541	-2721,02	6045,726	29,641	-73,541	163,398
3,789	28,503	-18,72	-1243,57	1896,33	3,789	-18,72	28,503
4,227	14,575	29,1	858,45	438,7335	4,227	29,1	14,575
32,072	126,005	-6,342	-361,494	7182,285	32,072	-6,342	126,005
32,121	124,973	-5,307	-249,429	5873,731	32,121	-5,307	124,973
32,181	123,709	-4,097	-151,589	4577,233	32,181	-4,097	123,709
4,142	16,887	-1,653	-109,809	1124,947	4,142	-1,653	16,887
4,366	15,442	32,684	964,178	464,5985	4,366	32,684	15,442
59,879	207,987	-19,387	-1105,06	11855,26	59,879	-19,387	207,987
60,002	205,054	-16,409	-771,223	9637,538	60,002	-16,409	205,054
60,155	201,433	-12,867	-476,079	7453,021	60,155	-12,867	201,433
20,043	57,416	-4,18	-277,677	3829,358	20,043	-4,18	57,416
20,465	50,355	105,775	3120,363	1527,937	20,465	105,775	50,355
38,469	129,011	-4,192	-238,944	7353,627	38,469	-4,192	129,011
38,504	128,121	-3,447	-162,009	6021,687	38,504	-3,447	128,121
38,546	127,025	-2,587	-95,719	4699,925	38,546	-2,587	127,025
5,859	19,554	-0,898	-59,6541	1303,419	5,859	-0,898	19,554
6,057	18,525	39,295	1159,203	559,0558	6,057	39,295	18,525
27,762	239,44	0	0	13648,08	27,762	0	239,44
27,938	226,376	0	0	10639,67	27,938	0	226,376
28,2	209,626	0	0	7756,162	28,2	0	209,626
3,552	39,824	0	0	2648,204	3,552	0	39,824
3,796	30,324	49,885	1471,608	902,4347	3,796	49,885	30,324
31,8	132,64	0	0	7560,48	31,8	0	132,64
31,886	130,9	0	0	6152,3	31,886	0	130,9
31,992	128,77	0	0	4764,49	31,992	0	128,77
4,084	18,258	0	0	1215,979	4,084	0	18,258
4,299	17,201	33,862	998,929	516,3499	4,299	33,862	17,201
59,116	227,23	0	0	12952,11	59,116	0	227,23
59,334	222,256	0	0	10446,03	59,334	0	222,256
59,604	216,13	0	0	7996,81	59,604	0	216,13
19,848	62,966	0	0	4197,896	19,848	0	62,966
20,237	57,832	108,487	3200,367	1748,036	20,237	108,487	57,832
38,286	134,894	0	0	7688,958	38,286	0	134,894
38,348	133,4	0	0	6269,8	38,348	0	133,4
38,42	131,564	0	0	4867,868	38,42	0	131,564
5,822	20,656	0	0	1376,597	5,822	0	20,656
6,017	19,993	39,846	1175,457	602,2788	6,017	39,846	19,993
29,388	180,551	95,075	5419,275	10291,41	29,388	95,075	180,551
29,492	173,031	85,686	4027,242	8132,457	29,492	85,686	173,031
29,641	163,398	73,541	2721,017	6045,726	29,641	73,541	163,398
3,789	28,503	18,72	1243,57	1896,33	3,789	18,72	28,503
3,774	31,888	52,102	1537,009	948,5271	3,774	52,102	31,888
32,072	126,005	6,342	361,494	7182,285	32,072	6,342	126,005
32,121	124,973	5,307	249,429	5873,731	32,121	5,307	124,973
32,181	123,709	4,097	151,589	4577,233	32,181	4,097	123,709
4,142	16,887	1,653	109,8088	1124,947	4,142	1,653	16,887
4,29	17,404	34,071	1005,095	522,3198	4,29	34,071	17,404
59,879	207,987	19,387	1105,059	11855,26	59,879	19,387	207,987
60,002	205,054	16,409	771,223	9637,538	60,002	16,409	205,054
60,155	201,433	12,867	476,079	7453,021	60,155	12,867	201,433
20,043	57,416	4,18	277,6774	3829,358	20,043	4,18	57,416
20,205	58,639	109,05	3216,975	1771,776	20,205	109,05	58,639
38,469	129,011	4,192	238,944	7353,627	38,469	4,192	129,011
38,504	128,121	3,447	162,009	6021,687	38,504	3,447	128,121
38,546	127,025	2,587	95,719	4699,925	38,546	2,587	127,025
5,859	19,554	0,898	59,65414	1303,419	5,859	0,898	19,554
6,011	20,153	39,963	1178,909	606,9863	6,011	39,963	20,153

6	845,647	15202,41	102,687	28,666	322,853
0					
1a	-12552,7	26804,65	96,537	-243,922	560,058
Wind angle: 45 dgr					
1b	91,85721	19222,79	104,882	15,285	407,016
Wind angle: 45 dgr					
3	490,3241	34303,11	220,544	52,932	722,245
Wind angle: 45 dgr					
4	602,8764	19937,71	127,435	28,171	422,236
Wind angle: 45 dgr					
1a	1471,608	35594,55	91,248	49,885	745,59
Wind angle: 90 dgr					
1b	998,929	20209,6	104,061	33,862	427,769
Wind angle: 90 dgr					
3	3200,367	37340,88	218,139	108,487	786,414
Wind angle: 90 dgr					
4	1175,457	20805,5	126,893	39,846	440,507
Wind angle: 90 dgr					
1a	14948,11	27314,45	96,084	325,124	577,371
Wind angle: -45 dgr					
1b	1877,415	19280,52	104,806	51,47	408,978
Wind angle: -45 dgr					
3	5847,013	34546,95	220,284	161,893	730,529
Wind angle: -45 dgr					
4	1735,235	19985,64	127,389	51,087	423,864
Wind angle: -45 dgr					

W2H400+117A-AM1

Hoogte mast	Ber & bijlage	67 m		
Hoogte onderste stroomdraad (F3)		37 m		
		Hoogte	Excentriciteit ophanging t.o.v. hart mast	
Bliksemdraad = GW / (H_{mast} -	0,57 m =	66,43 m	0,759 m	
1e traverse - 380C1F1 F2 +	10 m =	57 m	0 m	
2e traverse - 380C1F2 F3 +	10 m =	47 m	0 m	
3e traverse - 380C1F3		37 m	0 m	
Passieve lijn = Comp C F3 -	7,5 m =	29,5 m	2,075 m	

Uit mast (excl belastingsfactoren)			Uit lijnen (incl belastingsfactoren)				
N	V	M	Nmin	Nmax	Vmax	Mlangs;max	Mdwars;max
[kN]	[kN]	[kNm]	[kN]	[kN]	[kN]	[kNm]	[kNm]
1003	148	4614	95	164	633	20252	30040

			Belastingen uit lijnen M_{langs}	M_{dwars}	N	V_{langs}	V_{dwars}	Belasting uit mast N	V	M
Perm load 1,2	0 deg	1a	1076	20241	135	36	429	1003	148	4614
		1b	1205	22331	139	41	474	1003	28	865
		3	1704	24614	**164**	58	522	1003	42	1298
		4	1317	22240	156	45	472	1003	28	865
		6	1183	21147	152	40	449			
	45 deg	1a	-2706	23619	133	-40	498	1003	148	4614
		1b	910	22991	139	35	487	1003	28	865
		3	-940	27351	162	6	576	1003	42	1298
		4	1125	22854	156	41	485	1003	28	865
	90 deg	1a	1233	26788	130	42	564	1003	148	4614
		1b	1216	23632	138	41	501	1003	28	865
		3	1902	**30040**	159	64	**633**	1003	42	1298
		4	1322	23457	155	45	497	1003	28	865
	-45 deg	1a	5036	23805	132	119	504	1003	148	4614
		1b	1513	23028	139	47	489	1003	28	865
		3	4574	27617	161	117	585	1003	42	1298
		4	1516	22888	156	49	486	1003	28	865
Perm load 0,9	0 deg	1a	852	16301	102	29	346	752	148	4614
		1b	**20252**	**11542**	**95**	**443**	**245**	752	28	865
		3	1508	20759	131	51	440	752	42	1298
		4	1102	18350	123	37	389	752	28	865
		6	846	15202	103	29	323			
	45 deg	1a	**-4293**	20260	99	**-75**	426	752	148	4614
		1b	438	18860	105	22	400	752	28	865
		3	-2036	23885	128	-19	502	752	42	1298
		4	757	19032	123	30	403	752	28	865
	90 deg	1a	1068	23981	96	36	504	752	148	4614
		1b	985	19585	105	33	415	752	28	865
		3	1751	26929	126	59	566	752	42	1298
		4	1112	19689	122	38	417	752	28	865
	-45 deg	1a	6238	20478	99	141	433	752	148	4614
		1b	1515	18902	105	44	401	752	28	865
		3	5327	24176	128	130	512	752	42	1298
		4	1459	19068	123	45	405	752	28	865

regel			Loadcase	Totaal M_{langs}	M_{dwars}	N	V_{langs}	V_{dwars}	Totaal moment							
1	Perm load 1,2	0 deg	1a	5690	20241	1138	184	429	21025,76	1						
2	Perm load 1,2	0 deg	1b	2070	22331	1142	69	474	22427,11	2						
3	Perm load 1,2	0 deg	3	3002	24614	1167	99	522	24796,71	3			x			
4	Perm load 1,2	0 deg	4	2182	22240	1159	72	472	22346,33	4						
5	Perm load 1,2	0 deg	6							5						
6										6						
7	Perm load 1,2	45 deg	1a	5969	26882	1136	144	602	27536,24	7						
8	Perm load 1,2	45 deg	1b	1522	23603	1142	55	507	23651,72	8						
9	Perm load 1,2	45 deg	3	1858	28268	1165	35	605	28329,4	9						
10	Perm load 1,2	45 deg	4	1737	23466	1159	61	504	23530,06	10						
11										11						
12	Perm load 1,2	90 deg	1a	1233	31402	1133	42	712	31425,97	12		x			x	x
13	Perm load 1,2	90 deg	1b	1216	24497	1141	41	529	24527,2	13						
14	Perm load 1,2	90 deg	3	1902	31338	1162	64	674	31395,34	14						
15	Perm load 1,2	90 deg	4 Construc	1322	24322	1158	45	525	24358,39	15						
16										16						
17	Perm load 1,2	-45 deg	1a	8299	27068	1135	223	609	28311,29	17						
18	Perm load 1,2	-45 deg	1b	2125	23640	1142	67	508	23735,29	18						
19	Perm load 1,2	-45 deg	3	5492	28535	1164	147	614	29058,46	19						
20	Perm load 1,2	-45 deg	4	2128	23500	1159	68	505	23596	20						
21										21						
22	Perm load 0,9	0 deg	1a	5466	16301	854	177	346	17192,74	22						
23	Perm load 0,9	0 deg	1b	21118	11542	847	471	245	24066,09	23	x			x		
24	Perm load 0,9	0 deg	3	2806	20759	883	93	440	20947,81	24						
25	Perm load 0,9	0 deg	4	1967	18350	875	65	389	18454,83	25						
26	Perm load 0,9	0 deg	6							26						
27										27						
28	Perm load 0,9	45 deg	1a	7555	23523	851	180	531	24706,33	28						
29	Perm load 0,9	45 deg	1b	1049	19472	857	42	419	19499,8	29						
30	Perm load 0,9	45 deg	3	2954	24803	881	48	531	24978,01	30						
31	Perm load 0,9	45 deg	4 Construc	1369	19643	875	50	423	19690,97	31						
32										32						
33	Perm load 0,9	90 deg	1a	1068	28595	849	36	652	28615,19	33						
34	Perm load 0,9	90 deg	1b	985	20450	857	33	443	20474,13	34						
35	Perm load 0,9	90 deg	3	1751	28227	878	59	608	28281,4	35						
36	Perm load 0,9	90 deg	4	1112	20555	875	38	445	20584,61	36						
37										37						
38	Perm load 0,9	-45 deg	1a	9500	23741	851	246	538	25571	38						
39	Perm load 0,9	-45 deg	1b	2127	19514	857	64	421	19629,47	39						
40	Perm load 0,9	-45 deg	3	6245	25093	880	160	541	25858,74	40						
41	Perm load 0,9	-45 deg	4	2071	19680	875	64	424	19788,65	41						
			Max	21118	31402	1167	471	712	31426							

samenvatting

	Mast	Bijlage		Wind	Loadcase	M_{langs}	M_{dwars}	N	V_{langs}	V_{dwars}
3	W2H400+117A-AM1		Perm load	0 deg	3	3002	24614	1167	99	522
12	W2H400+117A-AM1		Perm load	90 deg	1a	1233	31402	1133	42	712
23	W2H400+117A-AM1		Perm load	0 deg	1b	21118	11542	847	471	245

W2H400A+10 TOWER (rev 8.0, date: 2 Appendix AM1

Loadcases for tower strength (special limit state)

Loadcase	Attachment point	**AHEAD**			**BACK**			Totaal Vert	Dwars	Langs	Belastingen op mastvoet, per lijn M_{langs}	M_{dwars}	N	V_{langs}	V_{dwars}	Belasting op mastvoet, belastinggeval	M_{langs}	M_{dwars}	N	V_{langs}	V_{dwars}
		[N]	[N]	[N]	[N]	[N]	[N]	[kN]	[kN]	[kN]											
1a	380C1F1	20699	65977	134441	20699	65977	-134441	41,398	131,954	0	0	7521,378	41,398	0	131,954	1a	1076,337	20241,11	135,264	36,486	429,318
Wind, 10 (	380C1F2	20708	65654	134296	20708	65654	-134296	41,416	131,308	0	0	6171,476	41,416	0	131,308	Wind angle: 0 dgr					
Permaner	380C1F3	20720	65253	134139	20720	65253	-134139	41,44	130,506	0	0	4828,722	41,44	0	130,506						
Wind angl	GW / opg\	2698	8869	17762	2698	8869	-17762	5,396	17,738	0	0	1182,431	5,396	0	17,738						
	Comp. gl	5614	17812	36486				5,614	17,812	36,486	1076,337	537,1031	5,614	36,486	17,812						
1b	380C1F1	21296	72727	153795	21296	72727	-153795	42,592	145,454	0	0	8290,878	42,592	0	145,454	1b	1204,6915	22331,4	139,081	40,837	474,078
Wind, -20	380C1F2	21297	72651	153801	21297	72651	-153801	42,594	145,302	0	0	6829,194	42,594	0	145,302	Wind angle: 0 dgr					
Permaner	380C1F3	21299	72555	153811	21299	72555	-153811	42,598	145,11	0	0	5369,07	42,598	0	145,11						
Wind angl	GW / opg\	2775	9462	19904	2775	9462	-19904	5,55	18,924	0	0	1261,334	5,55	0	18,924						
	Comp. gl	5747	19288	40837				5,747	19,288	40,837	1204,692	580,921	5,747	40,837	19,288						
3	380C1F1	24217	77768	160718	24217	77768	-160718	48,434	155,536	0	0	8865,552	48,434	0	155,536	3	1704,2445	24614,33	163,807	57,771	521,639
Wind+ice,	380C1F2	24223	77516	160650	24223	77516	-160650	48,446	155,032	0	0	7286,504	48,446	0	155,032	Wind angle: 0 dgr					
Permaner	380C1F3	24231	77203	160580	24231	77203	-160580	48,462	154,406	0	0	5713,022	48,462	0	154,406						
Wind angl	GW / opg\	4560	14234	28537	4560	14234	-28537	9,12	28,468	0	0	1898,051	9,12	0	28,468						
	Comp. gl	9345	28197	57771				9,345	28,197	57,771	1704,245	851,2024	9,345	57,771	28,197						
4	380C1F1	23664	71801	151809	23664	71801	-151809	47,328	143,602	0	0	8185,314	47,328	0	143,602	4	1316,9095	22239,54	155,91	44,641	472,006
Construction/mainte		23665	71727	151819	23665	71727	-151819	47,33	143,454	0	0	6742,338	47,33	0	143,454	Wind angle: 0 dgr					
Permaner	380C1F3	23666	71634	151835	23666	71634	-151835	47,332	143,268	0	0	5300,916	47,332	0	143,268						
Wind angl	GW / opg\	3430	10310	21723	3430	10310	-21723	6,86	20,62	0	0	1374,993	6,86	0	20,62						
	Comp. gl	7060	21062	44641				7,06	21,062	44,641	1316,91	635,9785	7,06	44,641	21,062						
6	380C1F1	23267	68714	147358	23267	68714	-147358	46,534	137,428	0	0	7833,396	46,534	0	137,428	6	1183,3925	21147,01	151,994	40,115	449,056
Permaner	380C1F2	23267	68714	147358	23267	68714	-147358	46,534	137,428	0	0	6459,116	46,534	0	137,428	0					
Permaner	380C1F3	23267	68714	147358	23267	68714	-147358	46,534	137,428	0	0	5084,836	46,534	0	137,428						
	GW / opg\	3042	9033	19370	3042	9033	-19370	6,084	18,066	0	0	1204,742	6,084	0	18,066						
	Comp. gl	6308	18706	40115				6,308	18,706	40,115	1183,393	564,9161	6,308	40,115	18,706						
1a	380C1F1	20736	64612	133945	19712	91430	-161221	40,448	156,042	-27,276	-1554,73	8894,394	40,448	-27,276	156,042	1a	-2706,34064	23618,93	132,561	-39,627	497,797
Wind, 10 (	380C1F2	20740	64426	133904	19820	88382	-157396	40,56	152,808	-23,492	-1104,12	7181,976	40,56	-23,492	152,808	Wind angle: 45 dgr					
Permaner	380C1F3	20745	64192	133864	19961	84600	-152759	40,706	148,792	-18,895	-699,115	5505,304	40,706	-18,895	148,792						
Wind angl	GW / opg\	2707	8595	17608	2518	14071	-23956	5,225	22,666	-6,348	-421,698	1509,668	5,225	-6,348	22,666						
	Comp. gl	5622	17489	36384				5,622	17,489	36,384	1073,328	527,5912	5,622	36,384	17,489						
1b	380C1F1	21300	72397	153836	21124	77744	-156006	42,424	150,141	-2,17	-123,69	8558,037	42,424	-2,17	150,141	1b	910,02635	22990,98	138,619	35,039	487,461
Wind, -20	380C1F2	21301	72350	153845	21150	77158	-155583	42,451	149,508	-1,738	-81,686	7026,876	42,451	-1,738	149,508	Wind angle: 45 dgr					
Permaner	380C1F3	21302	72290	153858	21180	76436	-155104	42,482	148,726	-1,246	-46,102	5502,862	42,482	-1,246	148,726						
Wind angl	GW / opg\	2777	9399	19904	2737	10478	-20559	5,514	19,877	-0,655	-43,5117	1324,614	5,514	-0,655	19,877						
	Comp. gl	5748	19209	40848				5,748	19,209	40,848	1205,016	578,5926	5,748	40,848	19,209						
3	380C1F1	24242	76696	160509	23415	96871	-177798	47,657	173,567	-17,289	-985,473	9893,319	47,657	-17,289	173,567	3	-940,37831	27350,81	161,519	6,04	575,881
Wind+ice,	380C1F2	24245	76547	160498	23515	94559	-175168	47,76	171,106	-14,67	-689,49	8041,982	47,76	-14,67	171,106	Wind angle: 45 dgr					
Permaner	380C1F3	24249	76360	160492	23641	91710	-172042	47,89	168,07	-11,55	-427,35	6218,59	47,89	-11,55	168,07						
Wind angl	GW / opg\	4573	13832	28362	4282	21592	-36479	8,855	35,424	-8,117	-539,212	2359,937	8,855	-8,117	35,424						
	Comp. gl	9357	27714	57666				9,357	27,714	57,666	1701,147	836,9788	9,357	57,666	27,714						
4	380C1F1	23668	71479	151867	23538	76505	-153345	47,206	147,984	-1,478	-84,246	8435,088	47,206	-1,478	147,984	4	1125,15166	22854,13	155,574	40,879	484,501
Construction/mainte		23668	71433	151878	23557	75966	-153023	47,225	147,399	-1,145	-53,815	6927,753	47,225	-1,145	147,399	Wind angle: 45 dgr					
Permaner	380C1F3	23668	71374	151894	23579	75301	-152663	47,247	146,675	-0,769	-28,453	5426,975	47,247	-0,769	146,675						
Wind angl	GW / opg\	3431	10251	21730	3404	11206	-22118	6,835	21,457	-0,388	-25,7748	1430,576	6,835	-0,388	21,457						
	Comp. gl	7061	20986	44659				7,061	20,986	44,659	1317,441	633,7386	7,061	44,659	20,986						
1a	380C1F1	19809	88691	157780	19809	88691	-157780	39,618	177,382	0	0	10110,77	39,618	0	177,382	1a	1232,9525	26787,78	129,994	41,795	564,433
Wind, 10 (	380C1F2	19910	85922	154364	19910	85922	-154364	39,82	171,844	0	0	8076,668	39,82	0	171,844	Wind angle: 90 dgr					
Permaner	380C1F3	20042	82494	150243	20042	82494	-150243	40,084	164,988	0	0	6104,556	40,084	0	164,988						
Wind angl	GW / opg\	2532	13529	23227	2532	13529	-23227	5,064	27,058	0	0	1801,307	5,064	0	27,058						
	Comp. gl	5408	23161	41795				5,408	23,161	41,795	1232,953	694,4711	5,408	41,795	23,161						
1b	380C1F1	21147	77217	155624	21147	77217	-155624	42,294	154,434	0	0	8802,738	42,294	0	154,434	1b	1215,99	23631,91	138,226	41,22	500,968
Wind, -20	380C1F2	21170	76688	155265	21170	76688	-155265	42,34	153,376	0	0	7208,672	42,34	0	153,376	Wind angle: 90 dgr					
Permaner	380C1F3	21196	76036	154860	21196	76036	-154860	42,392	152,072	0	0	5626,664	42,392	0	152,072						
Wind angl	GW / opg\	2742	10368	20456	2742	10368	-20456	5,484	20,736	0	0	1381,655	5,484	0	20,736						
	Comp. gl	5716	20350	41220				5,716	20,35	41,22	1215,99	612,1857	5,716	41,22	20,35						
3	380C1F1	23505	94792	175430	23505	94792	-175430	47,01	189,584	0	0	10806,29	47,01	0	189,584	3	1901,629	30040,01	159,271	64,462	632,756
Wind+ice,	380C1F2	23597	92703	173116	23597	92703	-173116	47,194	185,406	0	0	8714,082	47,194	0	185,406	Wind angle: 90 dgr					
Permaner	380C1F3	23711	90132	170378	23711	90132	-170378	47,422	180,264	0	0	6669,768	47,422	0	180,264						
Wind angl	GW / opg\	4305	20827	35524	4305	20827	-35524	8,61	41,654	0	0	2773,61	8,61	0	41,654						
	Comp. gl	9035	35848	64462				9,035	35,848	64,462	1901,629	1076,264	9,035	64,462	35,848						
4	380C1F1	23555	76021	153054	23555	76021	-153054	47,11	152,042	0	0	8666,394	47,11	0	152,042	4	1322,308	23457,35	155,291	44,824	497,223
Construction/mainte		23572	75533	152784	23572	75533	-152784	47,144	151,066	0	0	7100,102	47,144	0	151,066	Wind angle: 90 dgr					
Permaner	380C1F3	23591	74930	152483	23591	74930	-152483	47,182	149,86	0	0	5544,82	47,182	0	149,86						
Wind angl	GW / opg\	3408	11112	22050	3408	11112	-22050	6,816	22,224	0	0	1481,514	6,816	0	22,224						
	Comp. gl	7039	22031	44824				7,039	22,031	44,824	1322,308	664,5204	7,039	44,824	22,031						
1a	380C1F1	19712	91430	161221	20736	64612	-133945	40,448	156,042	27,276	1554,732	8894,394	40,448	27,276	156,042	1a	5036,48664	23805	132,323	118,615	504,121
Wind, 10 (	380C1F2	19820	88382	157396	20740	64426	-133904	40,56	152,808	23,492	1104,124	7181,976	40,56	23,492	152,808	Wind angle: -45 dgr					
Permaner	380C1F3	19961	84600	152759	20745	64192	-133864	40,706	148,792	18,895	699,115	5505,304	40,706	18,895	148,792						
Wind angl	GW / opg\	2518	14071	23956	2707	8595	-17608	5,225	22,666	6,348	421,6976	1509,668	5,225	6,348	22,666						
	Comp. gl	5384	23813	42604				5,384	23,813	42,604	1256,818	713,6553	5,384	42,604	23,813						
1b	380C1F1	21124	77744	156006	21300	72397	-153836	42,424	150,141	2,17	123,69	8558,037	42,424	2,17	150,141	1b	1513,45765	23028,22	138,582	47,113	488,726
Wind, -20	380C1F2	21150	77158	155583	21301	72350	-153845	42,451	149,508	1,738	81,686	7026,876	42,451	1,738	149,508	Wind angle: -45 dgr					
Permaner	380C1F3	21180	76436	155104	21302	72290	-153858	42,482	148,726	1,246	46,102	5502,862	42,482	1,246	148,726						
Wind angl	GW / opg\	2737	10478	20559	2777	9399	-19904	5,514	19,877	0,655	43,51165	1324,614	5,514	0,655	19,877						
	Comp. gl	5711	20474	41304				5,711	20,474	41,304	1218,468	615,8333	5,711	41,304	20,474						
3	380C1F1	23415	96871	177798	24242	76696	-160509	47,657	173,567	17,289	985,473	9893,319	47,657	17,289	173,567	3	4574,04081	27617,21	161,16	117,135	584,937
Wind+ice,	380C1F2	23515	94559	175168	24245	76547	-160498	47,76	171,106	14,67	689,49	8041,982	47,76	14,67	171,106	Wind angle: -45 dgr					
Permaner	380C1F3	23641	91710	172042	24249	76360	-160492	47,89	168,07	11,55	427,35	6218,59	47,89	11,55	168,07						
Wind angl	GW / opg\	4282	21592	36479	4573	13832	-28362	8,855	35,424	8,117	539,2123	2359,937	8,855	8,117	35,424						
0 Comp. gl		8998	36770	65509				8,998	36,77	65,509	1932,516	1103,386	8,998	65,509	36,77						
4	380C1F1	23538	76505	153345	23668	71479	-151867	47,206	147,984	1,478	84,246	8435,088	47,206	1,478	147,984	4	1516,13084	22888,12	155,549	48,656	485,655
Construction/mainte		23557	75966	153023	23668	71433	-151878	47,225	147,399	1,145	53,815	6927,753	47,225	1,145	147,399	Wind angle: -45 dgr					
Permaner	380C1F3	23579	75301	152663	23668	71374	-151894	47,247	146,675	0,769	28,453	5426,975	47,247	0,769	146,675						
Wind angl	GW / opg\	3404	11206	22118	3431	10251	-21730	6,835	21,457	0,388	25,77484	1430,576	6,835	0,388	21,457						
	Comp. gl	7036	22140	44876				7,036	22,14	44,876	1323,842	667,7297	7,036	44,876	22,14						
1a	380C1F1	15631	53222	107089	15631	53222	-107089	31,262	106,444	0	0	6067,308	31,262	0	106,444	1a	851,9895	16300,72	102,17	28,881	345,585
Wind, 10 (	380C1F2	15644	52852	106842	15644	52852	-106842	31,288	105,704	0	0	4968,088	31,288	0	105,704	Wind angle: 0 dgr					
Permaner	380C1F3	15659	52395	106565	15659	52395	-106565	31,318	104,79	0	0	3877,23	31,318	0	104,79						
Wind angl	GW / opg\	2032	7191	14164	2032	7191	-14164	4,064	14,382	0	0	958,4808	4,064	0	14,382						
	Comp. gl	4238	14265	28881				4,238	14,265	28,881	851,9895	429,6114	4,238	28,881	14,265						
1b	380C1F1	16211	59002	124364	12436	12436	12436	28,647	71,438	136,8	7797,6	4071,966	28,647	136,8	71,438	1b	20252,3925	11542,42	94,524	443,07	244,757
Wind, -20	380C1F2	16213	58921	124359	12435	12435	12435	28,648	71,356	136,794	6429,318	3353,732	28,648	136,794	71,356	Wind angle: 0 dgr					
Permaner	380C1F3	16215	58819	124356	12435	12435	12435	28,65	71,254	136,791	5061,267	2636,398	28,65	136,791	71,254						
Wind angl	GW / opg\	2107	7611	15936	2107	7611	-15936	4,214	15,222	0	0	1014,396	4,214	0	15,222						
	Comp. gl	4365	15487	32685				4,365	15,487	32,685	964,2075	465,9239	4,365	32,685	15,487						
3	380C1F1	19175	65151	133662	19175	65151	-133662	38,35	130,302	0	0	7427,214	38,35	0	130,302	3	1508,335	20759,02	130,919	51,13	439,733
Wind+ice,	380C1F2	19184	64874	133539	19184	64874	-133539	38,368	129,748	0	0	6098,156	38,368	0	129,748	Wind angle: 0 dgr					
Permaner	380C1F3	19194	64530	133405	19194	64530	-133405	38,388	129,06	0	0	4775,22	38,388	0	129,06						
Wind angl	GW / opg\	3908	12761	25379	3908	12761	-25379	7,816	25,522	0	0	1701,359	7,816	0	25,522						
	Comp. gl	7997	25101	51130				7,997	25,101	51,13	1508,335	757,0733	7,997	51,13	25,101						
4	380C1F1	18642	59156	124693	18642	59156	-124693	37,284	118,312	0	0	6743,784	37,284	0	118,312	4	1101,6775	18349,72	123,113	37,345	389,418
Construction/mainte		18644	59079	124696	18644	59079	-124696	37,288	118,158	0	0	5553,426	37,288	0	118,158	Wind angle: 0 dgr					
Permaner	380C1F3	18645	58982	124703	18645	58982	-124703	37,29	117,964	0	0	4364,668	37,29	0	117,964						

Wind ang	GW / opg	2775	8662	18188	2775	8662	-18188	5,55	17,324	0	0	1155,046	5,55	0	17,324											
	Comp. gl	5701	17660	37345				5,701	17,66	37,345	1101,678	532,7996	5,701	37,345	17,66											
6	380C1F1	15721	49434	106011	15721	49434	-106011	31,442	98,868	0	0	5635,476	31,442	0	98,868	6	845,647	15202,41	102,687	28,666	322,853					
Permanen	380C1F3	15721	49434	106011	15721	49434	-106011	31,442	98,868	0	0	4646,796	31,442	0	98,868	0										
Permanen	380C1F3	15721	49434	106011	15721	49434	-106011	31,442	98,868	0	0	3658,116	31,442	0	98,868											
	GW / opg	2052	6441	13813	2052	6441	-13813	4,104	12,882	0	0	858,8662	4,104	0	12,882											
	Comp. gl	4257	13367	28666				4,257	13,367	28,666	845,647	403,1598	4,257	28,666	13,367											
1a	380C1F1	15681	51673	106198	14568	82988	-143122	30,249	134,661	-36,924	-2104,67	7675,677	30,249	-36,924	134,661	1a	-4292,86277	20260,12	99,239	-75,093	425,945					
Wind, 10	380C1F2	15687	51465	106112	14665	79514	-138382	30,352	130,979	-32,27	-1516,69	6156,013	30,352	-32,27	130,979	Wind angle:	45	dgr								
Permanen	380C1F3	15694	51208	106019	14797	75160	-132520	30,491	126,368	-26,501	-980,537	4675,616	30,491	-26,501	126,368											
Wind ang	GW / opg	2043	6874	13917	1855	13161	-22006	3,898	20,035	-8,089	-537,352	1333,884	3,898	-8,089	20,035											
	Comp. gl	4249	13902	28691				4,249	13,902	28,691	846,3845	418,9257	4,249	28,691	13,902											
1b	380C1F1	16218	58653	124362	15976	64778	-128204	32,194	123,431	-3,842	-218,994	7035,567	32,194	-3,842	123,431	1b	437,63315	18859,81	105,224	22,22	399,635					
Wind, -20	380C1F2	16218	58603	124366	16010	64081	-127542	32,228	122,684	-3,176	-149,272	5766,148	32,228	-3,176	122,684	Wind angle:	45	dgr								
Permanen	380C1F3	16219	58541	124374	16051	63227	-126778	32,27	121,768	-2,404	-88,948	4505,416	32,27	-2,404	121,768											
Wind ang	GW / opg	2109	7544	15925	2057	8805	-16970	4,166	16,349	-1,045	-69,4194	1089,226	4,166	-1,045	16,349											
	Comp. gl	4366	15403	32687				4,366	15,403	32,687	964,2665	463,448	4,366	32,687	15,403											
3	380C1F1	19209	63980	133241	18249	87128	-156908	37,458	151,108	-23,667	-1349,02	8613,156	37,458	-23,667	151,108	3	-2036,3432	23885,12	128,287	-18,865	501,869					
Wind+ice,	380C1F2	19213	63820	133206	18353	84478	-153553	37,566	148,298	-20,347	-956,309	6970,006	37,566	-20,347	148,298	Wind angle:	45	dgr								
Permanen	380C1F3	19218	63620	133173	18488	81196	-149499	37,706	144,816	-16,326	-604,062	5358,192	37,706	-16,326	144,816											
Wind ang	GW / opg	3923	12329	25138	3623	20729	-34628	7,546	33,058	-9,49	-630,421	2201,77	7,546	-9,49	33,058											
	Comp. gl	8011	24589	50965				8,011	24,589	50,965	1503,468	741,9983	8,011	50,965	24,589											
4	380C1F1	18647	58821	124723	18478	64373	-127328	37,125	123,194	-2,605	-148,485	7022,058	37,125	-2,605	123,194	4	757,48072	19031,57	122,673	30,498	403,272					
Construction/mainte	18647	58774	124731	18503	63757	-126843	37,15	122,531	-2,112	-99,264	5758,957	37,15	-2,112	122,531	Wind angle:	45	dgr									
Permanen	380C1F3	18648	58713	124742	18531	63001	-126289	37,179	121,714	-1,547	-57,239	4503,418	37,179	-1,547	121,714											
Wind ang	GW / opg	2775	8600	18190	2742	9652	-18786	5,517	18,252	-0,596	-39,5923	1216,668	5,517	-0,596	18,252											
	Comp. gl	5702	17581	37358				5,702	17,581	37,358	1102,061	530,4712	5,702	37,358	17,581											
1a	380C1F1	14654	79867	138862	14654	79867	-138862	29,308	159,734	0	0	9104,838	29,308	0	159,734	1a	1068,313	23981,24	96,298	36,214	504,224					
Wind, 10	380C1F2	14749	76687	134564	14749	76687	-134564	29,498	153,374	0	0	7208,578	29,498	0	153,374	Wind angle:	90	dgr								
Permanen	380C1F3	14877	72714	129275	14877	72714	-129275	29,754	145,428	0	0	5380,836	29,754	0	145,428											
Wind ang	GW / opg	1866	12565	21161	1866	12565	-21161	3,732	25,13	0	0	1672,218	3,732	0	25,13											
	Comp. gl	4006	20558	36214				4,006	20,558	36,214	1068,313	614,7735	4,006	36,214	20,558											
1b	380C1F1	16007	64151	127607	16007	64151	-127607	32,014	128,302	0	0	7313,214	32,014	0	128,302	1b	984,7985	19585,31	104,682	33,383	414,903					
Wind, -20	380C1F2	16037	63524	127038	16037	63524	-127038	32,074	127,048	0	0	5971,256	32,074	0	127,048	Wind angle:	90	dgr								
Permanen	380C1F3	16073	62756	126383	16073	62756	-126383	32,146	125,512	0	0	4643,944	32,146	0	125,512											
Wind ang	GW / opg	2063	8673	16820	2063	8673	-16820	4,126	17,346	0	0	1155,426	4,126	0	17,346											
	Comp. gl	4322	16695	33383				4,322	16,695	33,383	984,7985	501,4707	4,322	33,383	16,695											
3	380C1F1	18342	84746	153890	18342	84746	-153890	36,684	169,492	0	0	9661,044	36,684	0	169,492	3	1751,12	26929,45	125,641	59,36	566,218					
Wind+ice,	380C1F2	18440	82341	150900	18440	82341	-150900	36,88	164,682	0	0	7740,054	36,88	0	164,682	Wind angle:	90	dgr								
Permanen	380C1F3	18566	79371	147305	18566	79371	-147305	37,132	158,742	0	0	5873,454	37,132	0	158,742											
Wind ang	GW / opg	3644	19917	33572	3644	19917	-33572	7,288	39,834	0	0	2651,704	7,288	0	39,834											
	Comp. gl	7657	33468	59360				7,657	33,468	59,36	1751,12	1003,194	7,657	59,36	33,468											
4	380C1F1	18500	63819	126890	18500	63819	-126890	37	127,638	0	0	7275,366	37	0	127,638	4	1111,973	19689,42	122,304	37,694	417,131					
Construction/mainte	18522	63265	126476	18522	63265	-126476	37,044	126,53	0	0	5946,91	37,044	0	126,53	Wind angle:	90	dgr									
Permanen	380C1F3	18547	62582	126006	18547	62582	-126006	37,094	125,164	0	0	4631,068	37,094	0	125,164											
Wind ang	GW / opg	2746	9546	18691	2746	9546	-18691	5,492	19,092	0	0	1272,45	5,492	0	19,092											
	Comp. gl	5674	18707	37694				5,674	18,707	37,694	1111,973	563,6301	5,674	37,694	18,707											
1a	380C1F1	14568	82988	143122	15681	51673	-106198	30,249	134,661	36,924	2104,668	7675,677	30,249	36,924	134,661	1a	6237,70927	20478,1	98,974	141,02	433,353					
Wind, 10	380C1F2	14665	79514	138382	15687	51465	-106112	30,352	130,979	32,27	1516,69	6156,013	30,352	32,27	130,979	Wind angle:	-45	dgr								
Permanen	380C1F3	14797	75160	132520	15694	51208	-106019	30,491	126,368	26,501	980,537	4675,616	30,491	26,501	126,368											
Wind ang	GW / opg	1855	13161	22006	2043	6874	-13917	3,898	20,035	8,089	537,3523	1333,884	3,898	8,089	20,035											
	Comp. gl	3984	21310	37236				3,984	21,31	37,236	1098,462	636,9118	3,984	37,236	21,31											
1b	380C1F1	15976	64778	128204	16218	58653	-124362	32,194	123,431	3,842	218,994	7035,567	32,194	3,842	123,431	1b	1515,32585	18902,15	105,174	43,982	401,074					
Wind, -20	380C1F2	16010	64081	127542	16218	58603	-124366	32,228	122,684	3,176	149,272	5766,148	32,228	3,176	122,684	Wind angle:	-45	dgr								
Permanen	380C1F3	16051	63227	126778	16219	58541	-124374	32,27	121,768	2,404	88,948	4505,416	32,27	2,404	121,768											
Wind ang	GW / opg	2057	8805	16970	2109	7544	-15925	4,166	16,349	1,045	69,41935	1089,226	4,166	1,045	16,349											
	Comp. gl	4316	16842	33515				4,316	16,842	33,515	988,6925	505,7947	4,316	33,515	16,842											
3	380C1F1	18249	87128	156908	19209	63980	-133241	37,458	151,108	23,667	1349,019	8613,156	37,458	23,667	151,108	3	5326,9207	24175,83	127,896	130,41	511,751					
Wind+ice,	380C1F2	18353	84478	153553	19213	63820	-133206	37,566	148,298	20,347	956,309	6970,006	37,566	20,347	148,298	Wind angle:	-45	dgr								
Permanen	380C1F3	18488	81196	149499	19218	63620	-133173	37,706	144,816	16,326	604,062	5358,192	37,706	16,326	144,816											
Wind ang	GW / opg	3623	20729	34628	3923	12329	-25138	7,546	33,058	9,49	630,4207	2201,77	7,546	9,49	33,058											
0 Comp. gl		7620	34471	60580				7,62	34,471	60,58	1787,11	1032,706	7,62	60,58	34,471											
4	380C1F1	18478	64373	127328	18647	58821	-124723	37,125	123,194	2,605	148,485	7022,058	37,125	2,605	123,194	4	1458,85428	19068,29	122,641	44,632	404,519					
Construction/mainte	18503	63757	126843	18647	58774	-124731	37,15	122,531	2,112	99,264	5758,957	37,15	2,112	122,531	Wind angle:	-45	dgr									
Permanen	380C1F3	18531	63001	126289	18648	58713	-124742	37,179	121,714	1,547	57,239	4503,418	37,179	1,547	121,714											
Wind ang	GW / opg	2742	9652	18786	2775	8600	-18190	5,517	18,252	0,596	39,59928	1216,668	5,517	0,596	18,252											
	Comp. gl	5670	18828	37772				5,67	18,828	37,772	1114,274	567,1913	5,67	37,772	18,828											
1a	380C1F1	20699	65977	134441	0	0	0																			
Wind, 10	380C1F2	20708	65654	134296	0	0	0																			
Permanen	380C1F3	20720	65253	134139	0	0	0																			
Wind ang	GW / opg	2698	8869	17762	0	0	0																			
	Comp. gl	5614	17812	36486	0	0	0																			
1b	380C1F1	21296	72727	153795	0	0	0																			
Wind, -20	380C1F2	21297	72651	153801	0	0	0																			
Permanen	380C1F3	21299	72555	153811	0	0	0																			
Wind ang	GW / opg	2775	9462	19904	0	0	0																			
	Comp. gl	5747	19288	40837	0	0	0																			
3	380C1F1	24217	77768	160718	0	0	0																			
Wind+ice,	380C1F2	24223	77516	160650	0	0	0																			
Permanen	380C1F3	24231	77203	160580	0	0	0																			
Wind ang	GW / opg	4560	14234	28537	0	0	0																			
	Comp. gl	9345	28197	57771	0	0	0																			
4	380C1F1	23664	71801	151809	0	0	0																			
Construction/mainte	23665	71727	151819	0	0	0																				
Permanen	380C1F3	23666	71634	151835	0	0	0																			
Wind ang	GW / opg	3430	10310	21723	0	0	0																			
	Comp. gl	7060	21062	44641	0	0	0																			
6	380C1F1	23267	68714	147358	0	0	0																			
Permanen	380C1F2	23267	68714	147358	0	0	0																			
Permanen	380C1F3	23267	68714	147358	0	0	0																			
	GW / opg	3042	9033	19370	0	0	0																			
	Comp. gl	6308	18706	40115	0	0	0																			
1a	380C1F1	20736	64612	133945	0	0	0																			
Wind, 10	380C1F2	20740	64426	133904	0	0	0																			
Permanen	380C1F3	20745	64192	133864	0	0	0																			
Wind ang	GW / opg	2707	8595	17608	0	0	0																			
	Comp. gl	5622	17489	36384	0	0	0																			
1b	380C1F1	21300	72397	153836	0	0	0																			
Wind, -20	380C1F2	21301	72350	153845	0	0	0																			
Permanen	380C1F3	21302	72290	153858	0	0	0																			
Wind ang	GW / opg	2777	9399	19904	0	0	0																			
	Comp. gl	5748	19209	40848	0	0	0																			
3	380C1F1	24242	76696	160509	0	0	0																			
Wind+ice,	380C1F2	24245	76547	160498	0	0	0																			
Permanen	380C1F3	24249	76360	160492	0	0	0																			
Wind ang	GW / opg	4573	13832	28362	0	0	0																			
	Comp. gl	9357	27714	57666	0	0	0																			
4	380C1F1	23668	71479	151867	0	0	0																			
Construction/mainte	23668	71433	151878	0	0	0																				
Permanen	380C1F3	23668	71374	151894	0	0	0																			
Wind ang	GW / opg	3431	10251	21730	0	0	0																			
	Comp. gl	7061	20986	44659	0	0	0																			
1a	380C1F1	19809	88691	157780	0	0	0																			
Wind, 10	380C1F2	19910	85922	154364	0	0	0																			
Permanen	380C1F3	20042	82494	150243	0	0	0																			
Wind ang	GW / opg	2532	13529	23227	0	0	0																			
	Comp. gl	5408	23161	41795	0	0	0																			
1b	380C1F1	21147	77217	155624	0	0	0																			
Wind, -20	380C1F2	21170	76688	155265	0	0	0																			
Permanen	380C1F3	21196	76036	154860	0	0	0																			
Wind ang	GW / opg	2742	10368	20456	0	0	0																			
	Comp. gl	5716	20350	41220	0	0	0																			
3	380C1F1	23505	94792	175430	0	0	0																			
Wind+ice,	380C1F2	23597	92703	173116	0	0	0																			
Permanen	380C1F3	23711	90132	170378	0	0	0																			
Wind ang	GW / opg	4305	20827	35524	0	0	0																			
	Comp. gl	9035	35848	64462	0	0	0																			
4	380C1F1	23555	76021	153054	0	0	0																			
Construction/mainte	23572	75533	152784	0	0	0																				
Permanen	380C1F3	23591	74930	152483	0	0	0																			
Wind ang	GW / opg	3408	11112	22050	0	0	0																			
	Comp. gl	7039	22031	44824	0	0	0																			
1a	380C1F1	19712	91430	161221	0	0	0																			
Wind, 10	380C1F2	19820	88382	157396	0	0	0																			
Permanen	380C1F3	19961	84600	152759	0	0	0																			
Wind ang	GW / opg	2518	14071	23956	0	0	0																			
	Comp. gl	5384	23813	42604	0	0	0																			
1b	380C1F1	21124	77744	156006	0	0	0																			
Wind, -20	380C1F2	21150	77158	155583	0	0	0																			
Permanen	380C1F3	21180	76436	155104	0	0	0																			
Wind ang	GW / opg	2737	10478	20559	0	0	0																			
	Comp. gl	5711	20474	41304	0	0	0																			
3	380C1F1	23415	96871	177798	0	0	0																			
Wind+ice,	380C1F2	23515	94559	175168	0	0	0																			
Permanen	380C1F3	23641	91710	172042	0	0	0																			
Wind ang	GW / opg	4282	21592	36479	0	0	0																			
0 Comp. gl		8998	36770	65509	0	0	0																			
4	380C1F1	23538	76505	153345	0	0	0																			
Construction/mainte	23557	75966	153023	0	0	0																				
Permanen	380C1F3	23579	75301	152663	0	0	0																			
Wind ang	GW / opg	3404	11206	22118	0	0	0																			
	Comp. gl	7036	22140	44876	0	0	0																			
1a	380C1F1	15631	53222	107089	0	0	0																			
Wind, 10	380C1F2	15644	52852	106842	0	0	0																			
Permanen	380C1F3	15659	52395	106565	0	0	0																			
Wind ang	GW / opg	2032	7191	14164	0	0	0																			

	Comp. gl	4238	14265	28881	0	0	0
1b	380C1F1	16211	59002	124364	0	0	0
Wind, -20	380C1F2	16213	58921	124359	0	0	0
Permaner	380C1F3	16215	58819	124356	0	0	0
Wind angl	GW / opgv	2107	7611	15936	0	0	0
	Comp. gl	4365	15487	32685	0	0	0
3	380C1F1	19175	65151	133662	0	0	0
Wind+ice,	380C1F2	19184	64874	133539	0	0	0
Permaner	380C1F3	19194	64530	133405	0	0	0
Wind angl	GW / opgv	3908	12781	25379	0	0	0
	Comp. gl	7997	25101	51130	0	0	0
4	380C1F1	18642	59156	124693	0	0	0
Construction/mainte		18644	59079	124696	0	0	0
Permaner	380C1F3	18645	58982	124703	0	0	0
Wind angl	GW / opgv	2775	8662	18188	0	0	0
	Comp. gl	5701	17660	37345	0	0	0
6	380C1F1	15721	49434	106011	0	0	0
Permaner	380C1F2	15721	49434	106011	0	0	0
Permaner	380C1F3	15721	49434	106011	0	0	0
	GW / opgv	2052	6441	13813	0	0	0
	Comp. gl	4257	13367	28666	0	0	0
1a	380C1F1	15681	51673	106198	0	0	0
Wind, 10	380C1F2	15687	51465	106112	0	0	0
Permaner	380C1F3	15694	51208	106019	0	0	0
Wind angl	GW / opgv	2043	6874	13917	0	0	0
	Comp. gl	4249	13902	28691	0	0	0
1b	380C1F1	16218	58653	124362	0	0	0
Wind, -20	380C1F2	16218	58603	124366	0	0	0
Permaner	380C1F3	16219	58541	124374	0	0	0
Wind angl	GW / opgv	2109	7544	15925	0	0	0
	Comp. gl	4366	15403	32687	0	0	0
3	380C1F1	19209	63980	133241	0	0	0
Wind+ice,	380C1F2	19213	63820	133206	0	0	0
Permaner	380C1F3	19218	63620	133173	0	0	0
Wind angl	GW / opgv	3923	12329	25138	0	0	0
	Comp. gl	8011	24589	50965	0	0	0
4	380C1F1	18647	58821	124723	0	0	0
Construction/mainte		18647	58774	124731	0	0	0
Permaner	380C1F3	18648	58713	124742	0	0	0
Wind angl	GW / opgv	2775	8600	18190	0	0	0
	Comp. gl	5702	17581	37358	0	0	0
1a	380C1F1	14654	79867	138862	0	0	0
Wind, 10	380C1F2	14749	76687	134564	0	0	0
Permaner	380C1F3	14877	72714	129275	0	0	0
Wind angl	GW / opgv	1866	12565	21161	0	0	0
	Comp. gl	4006	20558	36214	0	0	0
1b	380C1F1	16007	64151	127607	0	0	0
Wind, -20	380C1F2	16037	63524	127038	0	0	0
Permaner	380C1F3	16073	62756	126383	0	0	0
Wind angl	GW / opgv	2063	8673	16820	0	0	0
	Comp. gl	4322	16695	33383	0	0	0
3	380C1F1	18342	84746	153890	0	0	0
Wind+ice,	380C1F2	18440	82341	150900	0	0	0
Permaner	380C1F3	18566	79371	147305	0	0	0
Wind angl	GW / opgv	3644	19917	33572	0	0	0
	Comp. gl	7657	33468	59360	0	0	0
4	380C1F1	18500	63819	126890	0	0	0
Construction/mainte		18522	63265	126476	0	0	0
Permaner	380C1F3	18547	62582	126006	0	0	0
Wind angl	GW / opgv	2746	9546	18691	0	0	0
	Comp. gl	5674	18707	37694	0	0	0
1a	380C1F1	14568	82988	143122	0	0	0
Wind, 10	380C1F2	14665	79514	138382	0	0	0
Permaner	380C1F3	14797	75160	132520	0	0	0
Wind angl	GW / opgv	1855	13161	22006	0	0	0
	Comp. gl	3984	21310	37236	0	0	0
1b	380C1F1	15976	64778	128204	0	0	0
Wind, -20	380C1F2	16010	64081	127542	0	0	0
Permaner	380C1F3	16051	63227	126778	0	0	0
Wind angl	GW / opgv	2057	8805	16970	0	0	0
	Comp. gl	4316	16842	33515	0	0	0
3	380C1F1	18249	87128	156908	0	0	0
Wind+ice,	380C1F2	18353	84478	153553	0	0	0
Permaner	380C1F3	18488	81196	149499	0	0	0
Wind angl	GW / opgv	3623	20729	34628	0	0	0
0 Comp. gl		7620	34471	60580	0	0	0
4	380C1F1	18478	64373	127328	0	0	0
Construction/mainte		18503	63757	126843	0	0	0
Permaner	380C1F3	18531	63001	126289	0	0	0
Wind angl	GW / opgv	2742	9652	18786	0	0	0
	Comp. gl	5670	18828	37772	0	0	0

W2H400+1 17A-AM2

Hoogte mast	Ber & bijlage	67	m		
Hoogte onderste stroomdraad (F3)		37	m		
		Hoogte		Excentriciteit ophanging t.o.v. hart mast	
Bliksemdraad = GW / CH_{max} -	0,57	m =	66,43	m	0,759 m
1e traverse - 380C1F1 F2 +	10	m =	57	m	0 m
2e traverse - 380C1F2 F3 +	10	m =	47	m	0 m
3e traverse - 380C1F3			37	m	0 m
Passieve lijn = Comp C. F3 -	7,5	m =	29,5	m	2,075 m

Uit mast			Uit lijnen				
ULS (incl bel factoren)			SLS				
N	V	M	Nmin	Nmax	Vmax	Mlangs;ma	Mdwars;max
[kN]	[kN]	[kNm]	[kN]	[kN]	[kN]	[kNm]	[kNm]
1003	148	4614	106	195	667	8232	31599

SLS			Belastingen uit lijnen M_{langs}	M_{dwars}	N	V_{langs}	V_{dwars}	Belasting uit mast N	V	M
0 deg	1a		934	**18036**	113	32	**382**	836	99	3076
	1b		1047	19503	117	35	414	836	99	3076
		3	2537	27811	**195**	86	589	836	99	3076
		4	1137	19230	131	39	408	836	99	3076
45 deg	1a		**-6036**	23261	109	**-109**	488	836	99	3076
	1b		775	20064	117	30	425	836	99	3076
		3	1187	29722	193	59	627	836	99	3076
		4	958	19751	130	35	419	836	99	3076
90 deg	1a		1231	28208	**106**	42	593	836	99	3076
	1b		1057	20608	116	36	437	836	99	3076
		3	2589	**31599**	192	88	**667**	836	99	3076
		4	1142	20260	130	39	429	836	99	3076
-45 deg	1a		**8232**	23550	109	**184**	498	836	99	3076
	1b		1332	20096	117	41	427	836	99	3076
		3	3951	29884	193	115	633	836	99	3076
		4	1323	19780	130	42	420	836	99	3076

regel			Loadcase	Totaal M_{langs}	M_{dwars}	N	V_{langs}	V_{dwars}	Totaal moment	M langs max	M dwars max	N max	V langs max	V dwars max	M tot max	N min
1	Perm load 1,2	0 deg	1a	4010	21112	949	130	481	21489,23	1						
2	Perm load 1,2	0 deg	1b	4123	22579	953	134	513	22952,23	2						
3	Perm load 1,2	0 deg	3	5613	30887	1031	185	688	31393,11	3		x				
4	Perm load 1,2	0 deg	4	4213	22306	967	137	507	22700,8	4						
5										5						
6	Perm load 1,2	45 deg	1a	9112	26337	945	208	587	27868,45	6						
7	Perm load 1,2	45 deg	1b	3851	23140	952	129	524	23458,52	7						
8	Perm load 1,2	45 deg	3	4263	32798	1029	158	726	33074,14	8						
9	Perm load 1,2	45 deg	4	4034	22827	966	134	517	23180,61	9						
10										10						
11	Perm load 1,2	90 deg	1a	4307	31284	941	140	691	31579,32	11						x
12	Perm load 1,2	90 deg	1b	4133	23684	952	135	536	24041,76	12						
13	Perm load 1,2	90 deg	3	5665	34675	1028	186	765	35134,35	13	x		x	x		
14	Perm load 1,2	90 deg	4 Construct	4218	23336	966	137	528	23714,47	14						
15										15						
16	Perm load 1,2	-45 deg	1a	10407	26626	945	283	597	28587,78	16 x			x			
17	Perm load 1,2	-45 deg	1b	3507	23172	952	140	525	23435,75	17						
18	Perm load 1,2	-45 deg	3	6126	32960	1029	214	731	33524,01	18						
19	Perm load 1,2	-45 deg	4	3498	22856	966	141	518	23121,74	19						
				10407	34675	1031	283	765	35134							
						941										

samenvatting

	Mast	Bijlage	Wind	Loadcase	M_{langs}	M_{dwars}	N	V_{langs}	V_{dwars}
1	W2H400+1	17A-AM2	Perm load :0 deg	1a	4010	21112	949	130	481
8	W2H400+1	17A-AM2	Perm load :45 deg	3	4263	32798	1029	158	726
11	W2H400+1	17A-AM2	Perm load :90 deg	1a	4307	31284	941	140	691
13	W2H400+1	17A-AM2	Perm load :90 deg	3	5665	34675	1028	186	765
16	W2H400+1	17A-AM2	Perm load :-45 deg	1a	10407	26626	945	283	597
	W2H400+1	17A-AM2	#N/B	#N/B	#N/B	#N/B	#N/B	#N/B	#N/B

W2H400A+10 TOWER (rev 8.0, date: 23-Appendix AM2
Loadcases for tower defliction analyses (Servicabilitylimit state)
Loadcase according to 50341-3-15

	Attachmer [N]	AHEAD [N]	[N]	[N]	BACK [N]	[N]
1a	380C1F1 / 17279	58927	117335	17279	58927	-117335
Wind, 10 c	380C1F2 / 17298	58429	116970	17298	58429	-116970
Permanen	380C1F3 / 17320	57816	116556	17320	57816	-116556
Wind angl	GW / opgv2244	8041	15633	2244	8041	-15633
	Comp. gl 4688	15792	31671			
1b	380C1F1 / 17918	63549	134475	17918	63549	-134475
Wind, -20	380C1F2 / 17919	63485	134478	17919	63485	-134478
Permanen	380C1F3 / 17920	63404	134485	17920	63404	-134485
Wind angl	GW / opgv2332	8213	17291	2332	8213	-17291
	Comp. gl 4828	16750	35482			
3	380C1F1 / 27294	84616	176414	27294	84616	-176414
Wind+ice,	380C1F2 / 27298	84424	176394	27298	84424	-176394
Permanen	380C1F3 / 27303	84182	176378	27303	84182	-176378
Wind angl	GW / opgv7709	20637	42599	7709	20637	-42599
	Comp. gl 15603	41147	85989			
4	380C1F1 / 19851	62101	131369	19851	62101	-131369
Constructi	380C1F2 / 19852	62039	131376	19852	62039	-131376
Permanen	380C1F3 / 19852	61960	131388	19852	61960	-131388
Wind angl	GW / opgv2876	8891	18744	2876	8891	-18744
	Comp. gl 5920	18179	38546			
1a	380C1F1 / 17351	56851	116000	15955	98185	-165875
Wind, 10 c	380C1F2 / 17360	56574	115867	16063	93713	-159762
Permanen	380C1F3 / 17369	56231	115721	16214	88074	-152123
Wind angl	GW / opgv2260	7613	15270	2033	15816	-25943
	Comp. gl 4703	15304	31383			
1b	380C1F1 / 17921	63272	134504	17768	67816	-136504
Wind, -20	380C1F2 / 17922	63232	134511	17790	67314	-136123
Permanen	380C1F3 / 17922	63182	134521	17817	66698	-135690
Wind angl	GW / opgv2333	8161	17290	2299	9081	-17880
	Comp. gl 4829	16683	35490			
3	380C1F1 / 27310	83788	176380	26752	98431	-186132
Wind+ice,	380C1F2 / 27311	83672	176387	26826	96772	-184515
Permanen	380C1F3 / 27313	83525	176400	26917	94733	-182630
Wind angl	GW / opgv7714	20369	42597	7548	24967	-45349
	Comp. gl 15608	40805	86033			
4	380C1F1 / 19854	61831	131413	19742	66084	-132785
Constructi	380C1F2 / 19854	61792	131422	19759	65625	-132496
Permanen	380C1F3 / 19854	61743	131435	19778	65059	-132171
Wind angl	GW / opgv2876	8841	18749	2853	9651	-19102
	Comp. gl 5920	18115	38560			
1a	380C1F1 / 16052	94169	160383	16052	94169	-160383
Wind, 10 c	380C1F2 / 16159	90057	154798	16159	90057	-154798
Permanen	380C1F3 / 16308	84886	147853	16308	84886	-147853
Wind angl	GW / opgv2045	15061	24882	2045	15061	-24882
	Comp. gl 4391	24164	41725			
1b	380C1F1 / 17788	67365	136160	17788	67365	-136160
Wind, -20	380C1F2 / 17808	66913	135836	17808	66913	-135836
Permanen	380C1F3 / 17831	66356	135469	17831	66356	-135469
Wind angl	GW / opgv2303	8986	17789	2303	8986	-17789
	Comp. gl 4801	17651	35835			
3	380C1F1 / 26819	96939	184675	26819	96939	-184675
Wind+ice,	380C1F2 / 26886	95443	183272	26886	95443	-183272
Permanen	380C1F3 / 26966	93605	181644	26966	93605	-181644
Wind angl	GW / opgv7567	24507	44936	7567	24507	-44936
	Comp. gl 15461	45750	87759			
4	380C1F1 / 19757	65672	132524	19757	65672	-132524
Constructi	380C1F2 / 19771	65257	132280	19771	65257	-132280
Permanen	380C1F3 / 19788	64744	132008	19788	64744	-132008
Wind angl	GW / opgv2856	9570	19041	2856	9570	-19041
	Comp. gl 5901	18997	38721			
1a	380C1F1 / 15955	98185	165875	17351	56851	-116000
Wind, 10 c	380C1F2 / 16063	93713	159762	17360	56574	-115867
Permanen	380C1F3 / 16214	88074	152123	17369	56231	-115721
Wind angl	GW / opgv2033	15816	25943	2260	7613	-15270
	Comp. gl 4365	25140	43060			
1b	380C1F1 / 17768	67816	136504	17921	63272	-134504
Wind, -20	380C1F2 / 17790	67314	136123	17922	63232	-134511
Permanen	380C1F3 / 17817	66698	135690	17922	63182	-134521
Wind angl	GW / opgv2299	9081	17880	2333	8161	-17290
	Comp. gl 4797	17757	35910			
3	380C1F1 / 26752	98431	186132	27310	83788	-176380
Wind+ice,	380C1F2 / 26826	96772	184515	27311	83672	-176387
Permanen	380C1F3 / 26917	94733	182630	27313	83525	-176400
Wind angl	GW / opgv7548	24967	45349	7714	20369	-42597
	Comp. gl 15439	46283	88127			
4	380C1F1 / 19742	66084	132785	19854	61831	-131413
Constructi	380C1F2 / 19759	65625	132496	19854	61792	-131422
Permanen	380C1F3 / 19778	65059	132171	19854	61743	-131435
Wind angl	GW / opgv2853	9651	19102	2876	8841	-18749
	Comp. gl 5899	19090	38768			

	Totaal Vert [kN]	Dwars [kN]	Langs [kN]		Belastingen op mastvoet, per lijn M_{langs}	M_{dwars}	N	V_{langs}	V_{dwars}
1a	34,558	117,854	0		0	6717,678	34,558	0	117,854
Wind, 10 c	34,596	116,858	0		0	5492,326	34,596	0	116,858
Permanen	34,64	115,632	0		0	4278,384	34,64	0	115,632
Wind angl	4,488	16,082	0		0	1071,734	4,488	0	16,082
	4,688	15,792	31,671		934,2945	475,5916	4,688	31,671	15,792
1b	35,836	127,098	0		0	7244,586	35,836	0	127,098
Wind, -20	35,838	126,97	0		0	5967,59	35,838	0	126,97
Permanen	35,84	126,808	0		0	4691,896	35,84	0	126,808
Wind angl	4,664	16,426	0		0	1094,719	4,664	0	16,426
	4,828	16,75	35,482		1046,719	504,1431	4,828	35,482	16,75
3	54,588	169,232	0		0	9646,224	54,588	0	169,232
Wind+ice,	54,596	168,848	0		0	7935,856	54,596	0	168,848
Permanen	54,606	168,364	0		0	6229,468	54,606	0	168,364
Wind angl	15,418	41,274	0		0	2753,534	15,418	0	41,274
	15,603	41,147	85,989		2536,676	1246,213	15,603	85,989	41,147
4	39,702	124,202	0		0	7079,514	39,702	0	124,202
Constructi	39,704	124,078	0		0	5831,666	39,704	0	124,078
Permanen	39,704	123,92	0		0	4585,04	39,704	0	123,92
Wind angl	5,752	17,782	0		0	1185,624	5,752	0	17,782
	5,92	18,179	38,546		1137,107	548,5645	5,92	38,546	18,179
1a	33,306	155,036	-49,875		-2842,88	8837,052	33,306	-49,875	155,036
Wind, 10 c	33,423	150,287	-43,895		-2063,07	7063,489	33,423	-43,895	150,287
Permanen	33,583	144,305	-36,402		-1346,87	5339,285	33,583	-36,402	144,305
Wind angl	4,293	23,429	-10,673		-709,007	1559,647	4,293	-10,673	23,429
	4,703	15,304	31,383		925,7985	461,2267	4,703	31,383	15,304
1b	35,689	131,088	-2		-114	7472,016	35,689	-2	131,088
Wind, -20	35,712	130,546	-1,612		-75,764	6135,662	35,712	-1,612	130,546
Permanen	35,739	129,88	-1,169		-43,253	4805,56	35,739	-1,169	129,88
Wind angl	4,632	17,242	-0,59		-39,1937	1148,902	4,632	-0,59	17,242
	4,829	16,683	35,49		1046,955	502,1687	4,829	35,49	16,683
3	54,062	182,219	-9,752		-555,864	10386,48	54,062	-9,752	182,219
Wind+ice,	54,137	180,444	-8,128		-382,016	8480,868	54,137	-8,128	180,444
Permanen	54,23	178,258	-6,23		-230,51	6595,546	54,23	-6,23	178,258
Wind angl	15,262	45,336	-2,752		-182,815	3023,254	15,262	-2,752	45,336
	15,608	40,805	86,033		2537,974	1236,134	15,608	86,033	40,805
4	39,596	127,915	-1,372		-78,204	7291,155	39,596	-1,372	127,915
Constructi	39,613	127,417	-1,074		-50,478	5988,599	39,613	-1,074	127,417
Permanen	39,632	126,802	-0,736		-27,232	4691,674	39,632	-0,736	126,802
Wind angl	5,729	18,492	-0,353		-23,4498	1232,772	5,729	-0,353	18,492
	5,92	18,115	38,56		1137,52	546,6765	5,92	38,56	18,115
1a	32,104	188,338	0		0	10735,27	32,104	0	188,338
Wind, 10 c	32,318	180,114	0		0	8465,358	32,318	0	180,114
Permanen	32,616	169,772	0		0	6281,564	32,616	0	169,772
Wind angl	4,09	30,122	0		0	2004,109	4,09	0	30,122
	4,391	24,164	41,725		1230,888	721,9493	4,391	41,725	24,164
1b	35,576	134,73	0		0	7679,61	35,576	0	134,73
Wind, -20	35,616	133,826	0		0	6289,822	35,616	0	133,826
Permanen	35,662	132,712	0		0	4910,344	35,662	0	132,712
Wind angl	4,606	17,972	0		0	1197,376	4,606	0	17,972
	4,801	17,651	35,835		1057,133	530,6666	4,801	35,835	17,651
3	53,638	193,878	0		0	11051,05	53,638	0	193,878
Wind+ice,	53,772	190,886	0		0	8971,642	53,772	0	190,886
Permanen	53,932	187,21	0		0	6926,77	53,932	0	187,21
Wind angl	15,134	49,014	0		0	3267,487	15,134	0	49,014
	15,461	45,75	87,759		2588,891	1381,707	15,461	87,759	45,75
4	39,514	131,344	0		0	7486,608	39,514	0	131,344
Constructi	39,542	130,514	0		0	6134,158	39,542	0	130,514
Permanen	39,576	129,488	0		0	4791,056	39,576	0	129,488
Wind angl	5,712	19,14	0		0	1275,806	5,712	0	19,14
	5,901	18,997	38,721		1142,27	572,6561	5,901	38,721	18,997
1a	33,306	155,036	49,875		2842,875	8837,052	33,306	49,875	155,036
Wind, 10 c	33,423	150,287	43,895		2063,065	7063,489	33,423	43,895	150,287
Permanen	33,583	144,305	36,402		1346,874	5339,285	33,583	36,402	144,305
Wind angl	4,293	23,429	10,673		709,0074	1559,647	4,293	10,673	23,429
	4,365	25,14	43,06		1270,27	750,6874	4,365	43,06	25,14
1b	35,689	131,088	2		114	7472,016	35,689	2	131,088
Wind, -20	35,712	130,546	1,612		75,764	6135,662	35,712	1,612	130,546
Permanen	35,739	129,88	1,169		43,253	4805,56	35,739	1,169	129,88
Wind angl	4,632	17,242	0,59		39,1937	1148,902	4,632	0,59	17,242
	4,797	17,757	35,91		1059,345	533,7853	4,797	35,91	17,757
3	54,062	182,219	9,752		555,864	10386,48	54,062	9,752	182,219
Wind+ice,	54,137	180,444	8,128		382,016	8480,868	54,137	8,128	180,444
Permanen	54,23	178,258	6,23		230,51	6595,546	54,23	6,23	178,258
Wind angl	15,262	45,336	2,752		182,8154	3023,254	15,262	2,752	45,336
	15,439	46,283	88,127		2599,747	1397,384	15,439	88,127	46,283
4	39,596	127,915	1,372		78,204	7291,155	39,596	1,372	127,915
Constructi	39,613	127,417	1,074		50,478	5988,599	39,613	1,074	127,417
Permanen	39,632	126,802	0,736		27,232	4691,674	39,632	0,736	126,802
Wind angl	5,729	18,492	0,353		23,44979	1232,772	5,729	0,353	18,492
	5,899	19,09	38,768		1143,656	575,3954	5,899	38,768	19,09

	Belasting op mastvoet, belastinggeval M_{langs}	M_{dwars}	N	V_{langs}	V_{dwars}
1a	934,2945	18035,71	112,97	31,671	382,218
Wind angle: 0 dgr					
1b	1046,719	19502,93	117,006	35,482	414,052
Wind angle: 0 dgr					
3	2536,676	27811,29	194,811	85,989	588,865
Wind angle: 0 dgr					
4	1137,107	19230,41	130,782	38,546	408,161
Wind angle: 0 dgr					
1a	-6036,02	23260,7	109,308	-109,462	488,361
Wind angle: 45 dgr					
1b	774,7443	20064,31	116,601	30,119	425,439
Wind angle: 45 dgr					
3	1186,768	29722,29	193,299	59,171	627,062
Wind angle: 45 dgr					
4	958,1562	19750,88	130,49	35,025	418,741
Wind angle: 45 dgr					
1a	1230,888	28208,25	105,519	41,725	592,51
Wind angle: 90 dgr					
1b	1057,133	20607,82	116,261	35,835	436,891
Wind angle: 90 dgr					
3	2588,891	31598,65	191,937	87,759	666,738
Wind angle: 90 dgr					
4	1142,27	20260,28	130,245	38,721	429,483
Wind angle: 90 dgr					
1a	8232,091	23550,16	108,97	183,905	498,197
Wind angle: -45 dgr					
1b	1331,556	20095,93	116,569	41,281	426,513
Wind angle: -45 dgr					
3	3950,952	29883,54	193,13	114,989	632,54
Wind angle: -45 dgr					
4	1323,02	19779,6	130,469	42,303	419,716
Wind angle: -45 dgr					

W2S400+2 | 21-AC

Hoogte mast	Ber & bijlage	76 m		
Hoogte onderste stroomdraad (F3)		50 m		
		Hoogte		Excentriciteit ophanging t.o.v. hart mast
Bliksemdraad = GW / (H_{mast} -	0,716 m =		75,284 m	1,459 m
1e traverse - 380C1F1 F2 +	10 m =		70 m	4,41 m
2e traverse - 380C1F2 F3 +	10 m =		60 m	4,41 m
3e traverse - 380C1F3			50 m	4,41 m
Passieve lijn = Comp C F3 -	4 m =		46 m	1,819 m

Uit mast (excl belastingsfactoren)			Uit lijnen (incl belastingsfactoren)				
N	V	M	Nmin	Nmax	Vmax	Mlangs;ma	Mdwars;max
[kN]	[kN]	[kNm]	[kN]	[kN]	[kN]	[kNm]	[kNm]
757	163	5841	99	318	220	0	13768

			Belastingen uit lijnen					Belasting uit mast		
			M_{langs}	M_{dwars}	N	V_{langs}	V_{dwars}	N	V	M
Perm load 1,2	0 deg	1a	**0**	547	164	**0**	**0**	757	163	5841
		1b	**0**	571	171	**0**	**0**	757	31	1095
		3	**0**	1036	**318**	**0**	**0**	757	46	1643
		4	**0**	649	195	**0**	**0**	757	31	1095
		6	**0**	612	183	**0**	**0**			
	45 deg	1a	**0**	7150	149	**0**	110	757	163	5841
		1b	**0**	1896	170	**0**	22	757	31	1095
		3	**0**	5132	314	**0**	69	757	46	1643
		4	**0**	1977	194	**0**	22	757	31	1095
	90 deg	1a	**0**	**13768**	135	**0**	**220**	757	163	5841
		1b	**0**	3215	167	**0**	44	757	31	1095
		3	**0**	9210	304	**0**	137	757	46	1643
		4	**0**	3300	192	**0**	44	757	31	1095
	-45 deg	1a	**0**	7150	149	**0**	110	757	163	5841
		1b	**0**	1896	170	**0**	22	757	31	1095
		3	**0**	5132	314	**0**	69	757	46	1643
		4	**0**	1977	194	**0**	22	757	31	1095
Perm load 0,9	0 deg	1a	**0**	**417**	125	**0**	**0**	568	163	5841
		1b	**0**	438	131	**0**	**0**	568	31	1095
		3	**0**	911	281	**0**	**0**	568	46	1643
		4	**0**	520	156	**0**	**0**	568	31	1095
		6	**0**	**417**	125	**0**	**0**			
	45 deg	1a	**0**	7016	109	**0**	110	568	163	5841
		1b	**0**	1762	130	**0**	22	568	31	1095
		3	**0**	5004	276	**0**	69	568	46	1643
		4	**0**	1847	155	**0**	22	568	31	1095
	90 deg	1a	**0**	13645	**99**	**0**	220	568	163	5841
		1b	**0**	3077	125	**0**	44	568	31	1095
		3	**0**	9078	264	**0**	137	568	46	1643
		4	**0**	3167	152	**0**	44	568	31	1095
	-45 deg	1a	**0**	7016	109	**0**	110	568	163	5841
		1b	**0**	1762	130	**0**	22	568	31	1095
		3	**0**	5004	276	**0**	69	568	46	1643
		4	**0**	1847	155	**0**	22	568	31	1095

regel			Loadcase	Totaal M_{langs}	M_{dwars}	N	V_{langs}	V_{dwars}	Totaal moment							
1	Perm load 1,2	0 deg	1a	5841	547	921	163	0	5866,603	1	x			x		
2	Perm load 1,2	0 deg	1b	1095	571	928	31	0	1234,937	2						
3	Perm load 1,2	0 deg	3	1643	1036	1075	46	0	1942,009	3			x			
4	Perm load 1,2	0 deg	4	1095	649	952	31	0	1273,206	4						
5	Perm load 1,2	0 deg	6							5						
6										6						
7	Perm load 1,2	45 deg	1a	4130	11281	906	115	225	12012,96	7						
8	Perm load 1,2	45 deg	1b	774	2671	927	22	44	2780,752	8						
9	Perm load 1,2	45 deg	3	1162	6294	1071	32	101	6400,186	9						
10	Perm load 1,2	45 deg	4	774	2751	951	22	44	2858,346	10						
11										11						
12	Perm load 1,2	90 deg	1a	0	19609	892	0	383	19608,77	12		x			x	x
13	Perm load 1,2	90 deg	1b	0	4310	924	0	75	4310,21	13						
14	Perm load 1,2	90 deg	3	0	10853	1061	0	183	10852,68	14						
15	Perm load 1,2	90 deg	4 Construc	0	4395	949	0	75	4394,918	15						
16										16						
17	Perm load 1,2	-45 deg	1a	4130	11281	906	115	225	12012,96	17						
18	Perm load 1,2	-45 deg	1b	774	2671	927	22	44	2780,752	18						
19	Perm load 1,2	-45 deg	3	1162	6294	1071	32	101	6400,186	19						
20	Perm load 1,2	-45 deg	4	774	2751	951	22	44	2858,346	20						
21										21						
22	Perm load 0,9	0 deg	1a	5841	417	693	163	0	5855,864	22	x			x		
23	Perm load 0,9	0 deg	1b	1095	438	699	31	0	1179,685	23						
24	Perm load 0,9	0 deg	3	1643	911	849	46	0	1878,244	24						
25	Perm load 0,9	0 deg	4	1095	520	724	31	0	1212,468	25						
26	Perm load 0,9	0 deg	6							26						
27										27						
28	Perm load 0,9	45 deg	1a	4130	11146	676	115	225	11886,46	28						
29	Perm load 0,9	45 deg	1b	774	2536	697	22	44	2652,072	29						
30	Perm load 0,9	45 deg	3	1162	6165	843	32	101	6273,961	30						
31	Perm load 0,9	45 deg	4 Construc	774	2621	723	22	44	2733,241	31						
32										32						
33	Perm load 0,9	90 deg	1a	0	19486	666	0	383	19485,61	33						
34	Perm load 0,9	90 deg	1b	0	4173	693	0	75	4172,682	34						
35	Perm load 0,9	90 deg	3	0	10721	832	0	183	10721,24	35						
36	Perm load 0,9	90 deg	4	0	4263	720	0	75	4262,634	36						
37										37						
38	Perm load 0,9	-45 deg	1a	4130	11146	676	115	225	11886,46	38						
39	Perm load 0,9	-45 deg	1b	774	2536	697	22	44	2652,072	39						
40	Perm load 0,9	-45 deg	3	1162	6165	843	32	101	6273,961	40						
41	Perm load 0,9	-45 deg	4	774	2621	723	22	44	2733,241	41						
			Max	5841	19609	1075	163	383	19609							

samenvatting

	Mast	Bijlage		Wind	Loadcase	M_{langs}	M_{dwars}	N	V_{langs}	V_{dwars}
1	W2S400+2	21-AC	Perm load	0 deg	1a	5841	547	921	163	0
3	W2S400+2	21-AC	Perm load	0 deg	3	1643	1036	1075	46	0
12	W2S400+2	21-AC	Perm load	90 deg	1a	0	19609	892	0	383
22	W2S400+2	21-AC	Perm load	0 deg	1a	5841	417	693	163	0

W2S400+24 TOWER (rev 6.0, date: 05-11-2012) **Appendix AC**

Loadcases for tower strength (ultimate limit state)

-

Loadcase according to 50341-3-15

			AHEAD			BACK		Totaal			Belastingen op mastvoet, per lijn					Belasting op mastvoet, belastinggeval					
		[N]	[N]	[N]	[N]	[N]	[N]	Vert [kN]	Dwars [kN]	Langs [kN]	M_{langs}	M_{dwars}	N	V_{langs}	V_{dwars}		M_{langs}	M_{dwars}	N	V_{langs}	V_{dwars}
	Attachment point																				
1a	GW / opgw	3154	0	19396	3154	0	-19396	6,308	0	0	0	27,81828	6,308	0	0	1a	0	547,4903	164,114	0	0
Wind, 10 (	380C1F1	24121	0	147923	24121	0	-147923	48,242	0	0	0	212,7472	48,242	0	0	Wind angle: 0 dgr					
Permaner	380C1F2	24121	0	147923	24121	0	-147923	48,242	0	0	0	212,7472	48,242	0	0						
Wind angl	380C1F3	24121	0	147923	24121	0	-147923	48,242	0	0	0	70,38508	48,242	0	0						
	Comp.cor	6540	0	40192	6540	0	-40192	13,08	0	0	0	23,79252	13,08	0	0						
1b	GW / opgw	3276	0	21992	3276	0	-21992	6,552	0	0	0	28,89432	6,552	0	0	1b	0	570,6432	171,018	0	0
Wind, -20	380C1F1	25154	0	169944	25154	0	-169944	50,308	0	0	0	221,8583	50,308	0	0	Wind angle: 0 dgr					
Permaner	380C1F2	25154	0	169944	25154	0	-169944	50,308	0	0	0	221,8583	50,308	0	0						
Wind angl	380C1F3	25154	0	169944	25154	0	-169944	50,308	0	0	0	73,39937	50,308	0	0						
	Comp.cor	6771	0	45123	6771	0	-45123	13,542	0	0	0	24,6329	13,542	0	0						
3	GW / opgw	12165	0	60826	12165	0	-60826	24,33	0	0	0	107,2953	24,33	0	0	3	0	1035,696	318,338	0	0
Wind+ice,	380C1F1	40813	0	238894	40813	0	-238894	81,626	0	0	0	359,9707	81,626	0	0	Wind angle: 0 dgr					
Permaner	380C1F2	40813	0	238894	40813	0	-238894	81,626	0	0	0	359,9707	81,626	0	0						
Wind angl	380C1F3	40813	0	238894	40813	0	-238894	81,626	0	0	0	119,0923	81,626	0	0						
	Comp.cor	24565	0	122600	24565	0	-122600	49,13	0	0	0	89,36747	49,13	0	0						
4	GW / opgw	4176	0	25031	4176	0	-25031	8,352	0	0	0	36,83232	8,352	0	0	4	0	649,3202	195,16	0	0
Constructi	380C1F1	28275	0	171853	28275	0	-171853	56,55	0	0	0	249,3855	56,55	0	0	Wind angle: 0 dgr					
Permaner	380C1F2	28275	0	171853	28275	0	-171853	56,55	0	0	0	249,3855	56,55	0	0						
Wind angl	380C1F3	28275	0	171853	28275	0	-171853	56,55	0	0	0	82,50645	56,55	0	0						
	Comp.cor	8579	0	51354	8579	0	-51354	17,158	0	0	0	31,2104	17,158	0	0						
6	GW / opgw	3527	0	21373	3527	0	-21373	7,054	0	0	0	31,10814	7,054	0	0	6	0	611,9154	183,428	0	0
Permaner	380C1F1	26958	0	162590	26958	0	-162590	53,916	0	0	0	237,7696	53,916	0	0	0					
Permaner	380C1F2	26958	0	162590	26958	0	-162590	53,916	0	0	0	237,7696	53,916	0	0						
	380C1F3	26958	0	162590	26958	0	-162590	53,916	0	0	0	78,66344	53,916	0	0						
	Comp.cor	7313	0	44262	7313	0	-44262	14,626	0	0	0	26,60469	14,626	0	0						
1a	GW / opgw	2739	2931	29156	2739	2931	-29156	5,478	5,862	0	0	434,498	5,478	0	5,862	1a	0	7150,414	148,844	0	109,992
Wind, 10 (	380C1F1	21738	16936	194368	21738	16936	-194368	43,476	33,872	0	0	2224,049	43,476	0	33,872	Wind angle: 45 dgr					
Permaner	380C1F2	21919	15864	189629	21919	15864	-189629	43,838	31,728	0	0	1779,726	43,838	0	31,728						
Wind angl	380C1F3	22143	14577	184113	22143	14577	-184113	44,286	29,154	0	0	2259,443	44,286	0	29,154						
	Comp.cor	5883	4688	53561	5883	4688	-53561	11,766	9,376	0	0	452,6984	11,766	0	9,376						
1b	GW / opgw	3233	586	22564	3233	586	-22564	6,466	1,172	0	0	110,5551	6,466	0	1,172	1b	0	1896,328	169,798	0	21,98
Wind, -20	380C1F1	24958	3384	172372	24958	3384	-172372	49,916	6,768	0	0	626,2096	49,916	0	6,768	Wind angle: 45 dgr					
Permaner	380C1F2	24982	3170	172077	24982	3170	-172077	49,964	6,34	0	0	537,3412	49,964	0	6,34						
Wind angl	380C1F3	25008	2913	171749	25008	2913	-171749	50,016	5,826	0	0	511,5779	50,016	0	5,826						
	Comp.cor	6718	937	45826	6718	937	-45826	13,436	1,874	0	0	110,6441	13,436	0	1,874						
3	GW / opgw	11986	3013	63102	11986	3013	-63102	23,972	6,026	0	0	527,5365	23,972	0	6,026	3	0	5132,265	313,91	0	68,576
Wind+ice,	380C1F1	40131	9461	247838	40131	9461	-247838	80,262	18,922	0	0	1489,275	80,262	0	18,922	Wind angle: 45 dgr					
Permaner	380C1F2	40209	8862	246773	40209	8862	-246773	80,418	17,724	0	0	1240,843	80,418	0	17,724						
Wind angl	380C1F3	40297	8143	245576	40297	8143	-245576	80,594	16,286	0	0	1343,662	80,594	0	16,286						
	Comp.cor	24332	4809	125495	24332	4809	-125495	48,664	9,618	0	0	530,9478	48,664	0	9,618						
4	GW / opgw	4149	586	25414	4149	586	-25414	8,298	1,172	0	0	118,6342	8,298	0	1,172	4	0	1977,025	194,31	0	21,992
Constructi	380C1F1	28136	3386	173762	28136	3386	-173762	56,272	6,772	0	0	654,4795	56,272	0	6,772	Wind angle: 45 dgr					
Permaner	380C1F2	28153	3172	173530	28153	3172	-173530	56,306	6,344	0	0	565,5095	56,306	0	6,344						
Wind angl	380C1F3	28172	2915	173271	28172	2915	-173271	56,344	5,83	0	0	521,1116	56,344	0	5,83						
	Comp.cor	8545	937	51830	8545	937	-51830	17,09	1,874	0	0	117,2907	17,09	0	1,874						
1a	GW / opg	2497	5866	44150	2497	5866	-44150	4,994	11,732	0	0	843,2635	4,994	0	11,732	1a	0	13767,77	135,336	0	220,104
Wind, 10	380C1F1	19748	33892	276409	19748	33892	-276409	39,496	67,784	0	0	4241,217	39,496	0	67,784	Wind angle: 90 dgr					
Permane	380C1F2	19922	31745	265794	19922	31745	-265794	39,844	63,49	0	0	3350,212	39,844	0	63,49						
Wind an	380C1F3	20156	29168	253046	20156	29168	-253046	40,312	58,336	0	0	4450,583	40,312	0	58,336						
	Comp.co	5345	9381	77021	5345	9381	-77021	10,69	18,762	0	0	882,4971	10,69	0	18,762						
1b	GW / opg	3129	1171	24147	3129	1171	-24147	6,258	2,342	0	0	191,5378	6,258	0	2,342	1b	0	3215,023	166,53	0	43,962
Wind, -2(	380C1F1	24436	6769	179309	24436	6769	-179309	48,872	13,538	0	0	1027,806	48,872	0	13,538	Wind angle: 90 dgr					
Permane	380C1F2	24516	6341	178208	24516	6341	-178208	49,032	12,682	0	0	850,3311	49,032	0	12,682						
Wind an	380C1F3	24606	5826	176968	24606	5826	-176968	49,212	11,652	0	0	949,0095	49,212	0	11,652						
	Comp.co	6578	1874	47833	6578	1874	-47833	13,156	3,748	0	0	196,3388	13,156	0	3,748						
3	GW / opg	11582	6027	69163	11582	6027	-69163	23,164	12,054	0	0	945,9332	23,164	0	12,054	3	0	9209,903	303,546	0	137,172
Wind+ice	380C1F1	38586	18924	271731	38586	18924	-271731	77,172	37,848	0	0	2611,209	77,172	0	37,848	Wind angle: 90 dgr					
Permane	380C1F2	38799	17726	268081	38799	17726	-268081	77,598	35,452	0	0	2114,807	77,598	0	35,452						
Wind an	380C1F3	39052	16288	263909	39052	16288	-263909	78,104	32,576	0	0	2566,405	78,104	0	32,576						
	Comp.co	23754	9621	133523	23754	9621	-133523	47,508	19,242	0	0	971,5491	47,508	0	19,242						
4	GW / opg	4077	1172	26511	4077	1172	-26511	8,154	2,344	0	0	200,0391	8,154	0	2,344	4	0	3299,731	191,956	0	43,988
Construc	380C1F1	27755	6773	179292	27755	6773	-179292	55,51	13,546	0	0	1057,559	55,51	0	13,546	Wind angle: 90 dgr					
Permane	380C1F2	27814	6344	178408	27814	6344	-178408	55,628	12,688	0	0	879,7195	55,628	0	12,688						
Wind an	380C1F3	27881	5830	177414	27881	5830	-177414	55,762	11,66	0	0	959,1682	55,762	0	11,66						
	Comp.co	8451	1875	53217	8451	1875	-53217	16,902	3,75	0	0	203,2447	16,902	0	3,75						
1a	GW / opg	2739	2931	29156	2739	2931	-29156	5,478	5,862	0	0	434,498	5,478	0	5,862	1a	0	7150,414	148,844	0	109,992
Wind, 10	380C1F1	21738	16936	194368	21738	16936	-194368	43,476	33,872	0	0	2224,049	43,476	0	33,872	Wind angle: -45 dgr					
Permane	380C1F2	21919	15864	189629	21919	15864	-189629	43,838	31,728	0	0	1779,726	43,838	0	31,728						
Wind an	380C1F3	22143	14577	184113	22143	14577	-184113	44,286	29,154	0	0	2259,443	44,286	0	29,154						
	Comp.co	5883	4688	53561	5883	4688	-53561	11,766	9,376	0	0	452,6984	11,766	0	9,376						
1b	GW / opg	3233	586	22564	3233	586	-22564	6,466	1,172	0	0	110,5551	6,466	0	1,172	1b	0	1896,328	169,798	0	21,98
Wind, -2(	380C1F1	24958	3384	172372	24958	3384	-172372	49,916	6,768	0	0	626,2096	49,916	0	6,768	Wind angle: -45 dgr					
Permane	380C1F2	24982	3170	172077	24982	3170	-172077	49,964	6,34	0	0	537,3412	49,964	0	6,34						
Wind an	380C1F3	25008	2913	171749	25008	2913	-171749	50,016	5,826	0	0	511,5779	50,016	0	5,826						
	Comp.co	6718	937	45826	6718	937	-45826	13,436	1,874	0	0	110,6441	13,436	0	1,874						
3	GW / opg	11986	3013	63102	11986	3013	-63102	23,972	6,026	0	0	527,5365	23,972	0	6,026	3	0	5132,265	313,91	0	68,576
Wind+ice	380C1F1	40131	9461	247838	40131	9461	-247838	80,262	18,922	0	0	1489,275	80,262	0	18,922	Wind angle: -45 dgr					
Permane	380C1F2	40209	8862	246773	40209	8862	-246773	80,418	17,724	0	0	1240,843	80,418	0	17,724						
Wind an	380C1F3	40297	8143	245576	40297	8143	-245576	80,594	16,286	0	0	1343,662	80,594	0	16,286						
	Comp.co	24332	4809	125495	24332	4809	-125495	48,664	9,618	0	0	530,9478	48,664	0	9,618						
4	GW / opg	4149	586	25414	4149	586	-25414	8,298	1,172	0	0	118,6342	8,298	0	1,172	4	0	1977,025	194,31	0	21,992
Construc	380C1F1	28136	3386	173762	28136	3386	-173762	56,272	6,772	0	0	654,4795	56,272	0	6,772	Wind angle: -45 dgr					
Permane	380C1F2	28153	3172	173530	28153	3172	-173530	56,306	6,344	0	0	565,5095	56,306	0	6,344						
Wind an	380C1F3	28172	2915	173271	28172	2915	-173271	56,344	5,83	0	0	521,1116	56,344	0	5,83						
	Comp.co	8545	937	51830	8545	937	-51830	17,09	1,874	0	0	117,2907	17,09	0	1,874						
1a	GW / opg	2398	0	15241	2398	0	-15241	4,796	0	0	0	21,15036	4,796	0	0	1a	0	416,9615	124,984	0	0
Wind, 10	380C1F1	18373	0	116970	18373	0	-116970	36,746	0	0	0	162,0499	36,746	0	0	Wind angle: 0 dgr					
Permane	380C1F2	18373	0	116970	18373	0	-116970	36,746	0	0	0	162,0499	36,746	0	0						
Wind an	380C1F3	18373	0	116970	18373	0	-116970	36,746	0	0	0	53,61241	36,746	0	0						
	Comp.co	4975	0	31630	4975	0	-31630	9,95	0	0	0	18,09905	9,95	0	0						
1b	GW / opg	2508	0	17594	2508	0	-17594	5,016	0	0	0	22,12056	5,016	0	0	1b	0	438,4314	131,384	0	0
Wind, -20	380C1F1	19333	0	137389	19333	0	-137389	38,666	0	0	0	170,5171	38,666	0	0	Wind angle: 0 dgr					
Permaner	380C1F2	19333	0	137389	19333	0	-137389	38,666	0	0	0	170,5171	38,666	0	0						
Wind angl	380C1F3	19333	0	137389	19333	0	-137389	38,666	0	0	0	56,41369	38,666	0	0						
	Comp.cor	5185	0	36110	5185	0	-36110	10,37	0	0	0	18,86303	10,37	0	0						
3	GW / opgw	11476	0	58126	11476	0	-58126	22,952	0	0	0	101,2183	22,952	0	0	3	0	910,5331	280,864	0	0
Wind+ice,	380C1F1	35273	0	212402	35273	0	-212402	70,546	0	0	0	311,1079	70,546	0	0	Wind angle: 0 dgr					
Permaner	380C1F2	35273	0	212402	35273	0	-212402	70,546	0	0	0	311,1079	70,546	0	0						
Wind angl	380C1F3	35273	0	212402	35273	0	-212402	70,546	0	0	0	102,9266	70,546	0	0						
	Comp.cor	23137	0	117021	23137	0	-117021	46,274	0	0	0	84,17241	46,274	0	0						
4	GW / opgw	3434	0	21182	3434	0	-21182	6,868	0	0	0	30,28788	6,868	0	0	4	0	520,2333	156,47	0	0
Constructi	380C1F1	22586	0	142171	22586	0	-142171	45,172	0	0	0	199,2085	45,172	0	0	Wind angle: 0 dgr					
Permaner	380C1F2	22586	0	142171	22586	0	-142171	45,172	0	0	0	199,2085	45,172	0	0						
Wind angl	380C1F3	22586	0	142171	22586	0	-142171	45,172	0	0	0	65,90595	45,172	0	0						
	Comp.cor	7043	0	43419	7043	0	-43419	14,086	0	0	0	25,62243	14,086	0	0						
6	GW / opgw	2398	0	15241	2398	0	-15241	4,796	0	0	0	21,15036	4,796	0	0	6	0	416,9615	124,984	0	0
Permaner	380C1F1	18373	0	116970	18373	0	-116970	36,746	0	0	0	162,0499	36,746	0	0	0					
Permaner	380C1F2	18373	0	116970	18373	0	-116970	36,746	0	0	0	162,0499	36,746	0	0						
	380C1F3	18373	0	116970	18373	0	-116970	36,746	0	0	0	53,61241	36,746	0	0						
	Comp.cor	4975	0	31630	4975	0	-31630	9,95	0	0	0	18,09905	9,95	0	0						
1a	GW / opgw	1990	2930	27195	1990	2930	-27195	3,98	5,86	0	0	427,7518	3,98	0	5,86	1a	0	7015,61	108,668	0	109,976

Wind, 10	380C1F1	15852	16934	176206	15852	16934	-176206	31,704	33,868	0	0	2171,895	31,704	0	33,868	Wind angle: 45 dgr							
Permanen	380C1F2	16005	15862	170612	16005	15862	-170612	32,01	31,724	0	0	1727,364	32,01	0	31,724								
Wind ang	380C1F3	16201	14575	164011	16201	14575	-164011	32,402	29,15	0	0	2241,803	32,402	0	29,15								
	Comp.cor	4286	4687	48586	4286	4687	-48586	8,572	9,374	0	0	446,7965	8,572	0	9,374								
1b	GW / opg	2451	585	18411	2451	585	-18411	4,902	1,17	0	0	103,5178	4,902	0	1,17	1b	0	1762,073	129,688	0	21,974		
Wind, -20	380C1F1	19060	3384	140902	19060	3384	-140902	38,12	6,768	0	0	574,1892	38,12	0	6,768	Wind angle: 45 dgr							
Permanen	380C1F2	19092	3169	140479	19092	3169	-140479	38,184	6,338	0	0	485,2914	38,184	0	6,338								
Wind ang	380C1F3	19128	2912	140006	19128	2912	-140006	38,256	5,824	0	0	494,2695	38,256	0	5,824								
	Comp.cor	5113	937	37122	5113	937	-37122	10,226	1,874	0	0	104,8051	10,226	0	1,874								
3	GW / opg	11284	3012	60586	11284	3012	-60586	22,568	6,024	0	0	521,2049	22,568	0	6,024	3	0	5003,865	275,718	0	68,564		
Wind+ice,	380C1F1	34469	9459	223266	34469	9459	-223266	68,938	18,918	0	0	1439,097	68,938	0	18,918	Wind angle: 45 dgr							
Permanen	380C1F2	34559	8860	221984	34559	8860	-221984	69,118	17,72	0	0	1190,81	69,118	0	17,72								
Wind ang	380C1F3	34661	8142	220540	34661	8142	-220540	69,322	16,284	0	0	1327,065	69,322	0	16,284								
	Comp.cor	22886	4809	120162	22886	4809	-120162	45,772	9,618	0	0	525,6873	45,772	0	9,618								
4	GW / opg	3401	586	21677	3401	586	-21677	6,802	1,172	0	0	112,0368	6,802	0	1,172	4	0	1846,824	155,372	0	21,988		
Construct	380C1F1	22406	3386	144752	22406	3386	-144752	44,812	6,772	0	0	603,9409	44,812	0	6,772	Wind angle: 45 dgr							
Permanen	380C1F2	22427	3171	144440	22427	3171	-144440	44,854	6,342	0	0	514,9061	44,854	0	6,342								
Wind ang	380C1F3	22452	2914	144091	22452	2914	-144091	44,904	5,828	0	0	504,2701	44,904	0	5,828								
	Comp.cor	7000	937	44038	7000	937	-44038	14	1,874	0	0	111,67	14	0	1,874								
1a	GW / opg	1828	5865	43202	1828	5865	-43202	3,656	11,73	0	0	837,223	3,656	0	11,73	1a	0	13644,61	98,606	0	220,086		
Wind, 10	380C1F1	14398	33890	266840	14398	33890	-266840	28,796	67,78	0	0	4193,79	28,796	0	67,78	Wind angle: 90 dgr							
Permanen	380C1F2	14512	31742	255526	14512	31742	-255526	29,024	63,484	0	0	3302,196	29,024	0	63,484								
Wind ang	380C1F3	14669	29166	241826	14669	29166	-241826	29,338	58,332	0	0	4434,27	29,338	0	58,332								
	Comp.cor	3896	9380	74407	3896	9380	-74407	7,792	18,76	0	0	877,1336	7,792	0	18,76								
1b	GW / opg	2327	1171	20560	2327	1171	-20560	4,654	2,342	0	0	184,4641	4,654	0	2,342	1b	0	3077,495	125,484	0	43,954		
Wind, -20	380C1F1	18391	6768	150606	18391	6768	-150606	36,782	13,536	0	0	974,3686	36,782	0	13,536	Wind angle: 90 dgr							
Permanen	380C1F2	18448	6339	149096	18448	6339	-149096	36,976	12,678	0	0	796,9642	36,976	0	12,678								
Wind ang	380C1F3	18601	5825	147381	18601	5825	-147381	37,202	11,65	0	0	931,3363	37,202	0	11,65								
	Comp.cor	4935	1874	39912	4935	1874	-39912	9,87	3,748	0	0	190,3615	9,87	0	3,748								
3	GW / opg	10866	6027	67053	10866	6027	-67053	21,732	12,054	0	0	939,6181	21,732	0	12,054	3	0	9078,458	264,472	0	137,158		
Wind+ice,	380C1F1	32795	18922	251301	32795	18922	-251301	65,59	37,844	0	0	2559,892	65,59	0	37,844	Wind angle: 90 dgr							
Permanen	380C1F2	33015	17724	247095	33015	17724	-247095	66,03	35,448	0	0	2063,592	66,03	0	35,448								
Wind ang	380C1F3	33281	16286	242256	33281	16286	-242256	66,562	32,572	0	0	2549,264	66,562	0	32,572								
	Comp.cor	22279	9620	128791	22279	9620	-128791	44,558	19,24	0	0	966,091	44,558	0	19,24								
4	GW / opg	3316	1172	23067	3316	1172	-23067	6,632	2,344	0	0	193,3271	6,632	0	2,344	4	0	3167,447	152,448	0	43,982		
Construct	380C1F1	21933	6772	152085	21933	6772	-152085	43,866	13,544	0	0	1006,089	43,866	0	13,544	Wind angle: 90 dgr							
Permanen	380C1F2	22004	6343	150926	22004	6343	-150926	44,008	12,686	0	0	828,3753	44,008	0	12,686								
Wind ang	380C1F3	22086	5829	149617	22086	5829	-149617	44,172	11,658	0	0	942,1078	44,172	0	11,658								
	Comp.cor	6885	1875	45818	6885	1875	-45818	13,77	3,75	0	0	197,5476	13,77	0	3,75								
1a	GW / opg	1990	2930	27195	1990	2930	-27195	3,98	5,86	0	0	427,7518	3,98	0	5,86	1a	0	7015,61	108,668	0	109,976		
Wind, 10	380C1F1	15852	16934	176206	15852	16934	-176206	31,704	33,868	0	0	2171,895	31,704	0	33,868	Wind angle: -45 dgr							
Permanen	380C1F2	16005	15862	170612	16005	15862	-170612	32,01	31,724	0	0	1727,364	32,01	0	31,724								
Wind ang	380C1F3	16201	14575	164011	16201	14575	-164011	32,402	29,15	0	0	2241,803	32,402	0	29,15								
	Comp.cor	4286	4687	48586	4286	4687	-48586	8,572	9,374	0	0	446,7965	8,572	0	9,374								
1b	GW / opg	2451	585	18411	2451	585	-18411	4,902	1,17	0	0	103,5178	4,902	0	1,17	1b	0	1762,073	129,688	0	21,974		
Wind, -20	380C1F1	19060	3384	140902	19060	3384	-140902	38,12	6,768	0	0	574,1892	38,12	0	6,768	Wind angle: -45 dgr							
Permanen	380C1F2	19092	3169	140479	19092	3169	-140479	38,184	6,338	0	0	485,2914	38,184	0	6,338								
Wind ang	380C1F3	19128	2912	140006	19128	2912	-140006	38,256	5,824	0	0	494,2695	38,256	0	5,824								
	Comp.cor	5113	937	37122	5113	937	-37122	10,226	1,874	0	0	104,8051	10,226	0	1,874								
3	GW / opg	11284	3012	60586	11284	3012	-60586	22,568	6,024	0	0	521,2049	22,568	0	6,024	3	0	5003,865	275,718	0	68,564		
Wind+ice,	380C1F1	34469	9459	223266	34469	9459	-223266	68,938	18,918	0	0	1439,097	68,938	0	18,918	Wind angle: -45 dgr							
Permanen	380C1F2	34559	8860	221984	34559	8860	-221984	69,118	17,72	0	0	1190,81	69,118	0	17,72								
Wind ang	380C1F3	34661	8142	220540	34661	8142	-220540	69,322	16,284	0	0	1327,065	69,322	0	16,284								
	Comp.cor	22886	4809	120162	22886	4809	-120162	45,772	9,618	0	0	525,6873	45,772	0	9,618								
4	GW / opg	3401	586	21677	3401	586	-21677	6,802	1,172	0	0	112,0368	6,802	0	1,172	4	0	1846,824	155,372	0	21,988		
Construct	380C1F1	22406	3386	144752	22406	3386	-144752	44,812	6,772	0	0	603,9409	44,812	0	6,772	Wind angle: -45 dgr							
Permanen	380C1F2	22427	3171	144440	22427	3171	-144440	44,854	6,342	0	0	514,9061	44,854	0	6,342								
Wind ang	380C1F3	22452	2914	144091	22452	2914	-144091	44,904	5,828	0	0	504,2701	44,904	0	5,828								
	Comp.cor	7000	937	44038	7000	937	-44038	14	1,874	0	0	111,67	14	0	1,874								

W2S400+2 21-AC2

Hoogte mast	Ber & bijlage	76 m		
Hoogte onderste stroomdraad (F3)		50 m		
		Hoogte	Excentriciteit ophanging t.o.v. hart mast	
Bliksemdraad = GW / C H_{mast} -	0,716 m =	75,284 m	1,459 m	
1e traverse - 380C1F1 F2 +	10 m =	70 m	4,41 m	
2e traverse - 380C1F2 F3 +	10 m =	60 m	4,41 m	
3e traverse - 380C1F3		50 m	4,41 m	
Passieve lijn = Comp C. F3 -	4 m =	46 m	1,819 m	

Uit mast			Uit lijnen				
ULS (incl bel factoren)			SLS				
N	V	M	Nmin	Nmax	Vmax	Mlangs;ma	Mdwars;max
[kN]	[kN]	[kNm]	[kN]	[kN]	[kN]	[kNm]	[kNm]
757	163	5841	117	244	147	0	9264

SLS		Belastingen uit lijnen M_{langs}	M_{dwars}	N	V_{langs}	V_{dwars}	Belasting uit mast N	V	M
0 deg	1a	**0**	**461**	138	**0**	**0**	631	109	3894
	1b	**0**	483	145	**0**	**0**	631	109	3894
	3	**0**	795	**244**	**0**	**0**	631	109	3894
	4	**0**	530	159	**0**	**0**	631	109	3894
45 deg	1a	**0**	4863	128	**0**	73	631	109	3894
	1b	**0**	1367	144	**0**	15	631	109	3894
	3	**0**	3525	241	**0**	46	631	109	3894
	4	**0**	1416	159	**0**	15	631	109	3894
90 deg	1a	**0**	**9264**	**117**	**0**	**147**	631	109	3894
	1b	**0**	2247	142	**0**	29	631	109	3894
	3	**0**	6242	234	**0**	91	631	109	3894
	4	**0**	2298	157	**0**	29	631	109	3894
-45 deg	1a	**0**	4863	128	**0**	73	631	109	3894
	1b	**0**	1367	144	**0**	15	631	109	3894
	3	**0**	3525	241	**0**	46	631	109	3894
	4	**0**	1416	159	**0**	15	631	109	3894

regel			Loadcase	Totaal M_{langs}	M_{dwars}	N	V_{langs}	V_{dwars}	Totaal moment		M langs max	M dwars max	N max	V langs max	V dwars max	M tot max	N min
1	Perm load 1,2	0 deg	1a	3894	4355	769	109	109	5841,846	1	x			x			
2	Perm load 1,2	0 deg	1b	3894	4377	776	109	109	5858,337	2	x			x			
3	Perm load 1,2	0 deg	3	3894	4689	874	109	109	6094,947	3	x		x	x			
4	Perm load 1,2	0 deg	4	3894	4424	790	109	109	5893,996	4	x			x			
5										5							
6	Perm load 1,2	45 deg	1a	3894	8757	759	109	182	9583,63	6	x			x			
7	Perm load 1,2	45 deg	1b	3894	5261	775	109	123	6545,253	7	x			x			
8	Perm load 1,2	45 deg	3	3894	7419	872	109	154	8378,978	8	x			x			
9	Perm load 1,2	45 deg	4	3894	5310	790	109	123	6584,624	9	x			x			
10										10							
11	Perm load 1,2	90 deg	1a	3894	13158	748	109	255	13721,85	11	x	x		x	x	x	x
12	Perm load 1,2	90 deg	1b	3894	6141	773	109	138	7271,485	12	x			x			
13	Perm load 1,2	90 deg	3	3894	10136	865	109	200	10858,41	13	x			x			
14	Perm load 1,2	90 deg	4 Construct	3894	6192	788	109	138	7314,643	14	x			x			
15										15							
16	Perm load 1,2	-45 deg	1a	2753	8757	759	109	182	9179,561	16				x			
17	Perm load 1,2	-45 deg	1b	2753	5261	775	109	123	5937,905	17				x			
18	Perm load 1,2	-45 deg	3	2753	7419	872	109	154	7913,637	18				x			
19	Perm load 1,2	-45 deg	4	2753	5310	790	109	123	5981,276	19				x			
				3894	13158	874	109	255	13722								
						748											

samenvatting

	Mast	Bijlage		Wind	Loadcase	M_{langs}	M_{dwars}	N	V_{langs}	V_{dwars}
1	W2S400+2	21-AC2	Perm load :	0 deg	1a	3894	4355	769	109	109
3	W2S400+2	21-AC2	Perm load :	0 deg	3	3894	4689	874	109	109
11	W2S400+2	21-AC2	Perm load :	90 deg	1a	3894	13158	748	109	255
	W2S400+2	21-AC2	#N/B	#N/B	#N/B	#N/B	#N/B	#N/B	#N/B	#N/B
	W2S400+2	21-AC2	#N/B	#N/B	#N/B	#N/B	#N/B	#N/B	#N/B	#N/B
	W2S400+2	21-AC2	#N/B	#N/B	#N/B	#N/B	#N/B	#N/B	#N/B	#N/B

W2S400+24 TOWER (rev 6.0, date: 05-11 Appendix AC2
Loadcases for tower strength (serviceabilitylimit state)
-
Loadcase according to 50341-3-15

			AHEAD			BACK		Totaal Vert	Dwars	Langs	Belastingen op mastvoet, per lijn M_{langs}	M_{dwars}	N	V_{langs}	V_{dwars}	Belasting op mastvoet, belastinggeval	M_{langs}	M_{dwars}	N	V_{langs}	V_{dwars}
		[N]	[N]	[N]	[N]	[N]	[N]	[kN]	[kN]	[kN]											
	Attachment point																				
1a	GW / opgv	2651	0	16659	2651	0	-16659	5,302	0	0	0	23,38182	5,302	0	0	1a	0	460,7593	138,114	0	0
Wind, 10 c	380C1F1 /	20302	0	127555	20302	0	-127555	40,604	0	0	0	179,0636	40,604	0	0	Wind angle: 0 dgr					
Permanen	380C1F2 /	20302	0	127555	20302	0	-127555	40,604	0	0	0	179,0636	40,604	0	0						
Wind angl	380C1F3 /	20302	0	127555	20302	0	-127555	40,604	0	0	0	59,24124	40,604	0	0						
	Comp.con	5500	0	34554	5500	0	-34554	11	0	0	0	20,009	11	0	0						
1b	GW / opgv	2766	0	19102	2766	0	-19102	5,532	0	0	0	24,39612	5,532	0	0	1b	0	482,8575	144,702	0	0
Wind, -20	380C1F1 /	21289	0	148577	21289	0	-148577	42,578	0	0	0	187,769	42,578	0	0	Wind angle: 0 dgr					
Permanen	380C1F2 /	21289	0	148577	21289	0	-148577	42,578	0	0	0	187,769	42,578	0	0						
Wind angl	380C1F3 /	21289	0	148577	21289	0	-148577	42,578	0	0	0	62,1213	42,578	0	0						
	Comp.con	5718	0	39202	5718	0	-39202	11,436	0	0	0	20,80208	11,436	0	0						
3	GW / opgv	8790	0	47128	8790	0	-47128	17,58	0	0	0	77,5278	17,58	0	0	3	0	794,8312	243,608	0	0
Wind+ice,	380C1F1 /	31746	0	194977	31746	0	-194977	63,492	0	0	0	279,9997	63,492	0	0	Wind angle: 0 dgr					
Permanen	380C1F2 /	31746	0	194977	31746	0	-194977	63,492	0	0	0	279,9997	63,492	0	0						
Wind angl	380C1F3 /	31746	0	194977	31746	0	-194977	63,492	0	0	0	92,63483	63,492	0	0						
	Comp.con	17776	0	95137	17776	0	-95137	35,552	0	0	0	64,66909	35,552	0	0						
4	GW / opgv	3347	0	20717	3347	0	-20717	6,694	0	0	0	29,52054	6,694	0	0	4	0	530,4726	159,362	0	0
Constructi	380C1F1 /	23149	0	145177	23149	0	-145177	46,298	0	0	0	204,1742	46,298	0	0	Wind angle: 0 dgr					
Permanen	380C1F2 /	23149	0	145177	23149	0	-145177	46,298	0	0	0	204,1742	46,298	0	0						
Wind angl	380C1F3 /	23149	0	145177	23149	0	-145177	46,298	0	0	0	67,54878	46,298	0	0						
	Comp.con	6887	0	42592	6887	0	-42592	13,774	0	0	0	25,05491	13,774	0	0						
1a	GW / opgv	2371	1953	22684	2371	1953	-22684	4,742	3,906	0	0	294,3322	4,742	0	3,906	1a	0	4862,867	128,364	0	73,308
Wind, 10 c	380C1F1 /	18768	11288	155540	18768	11288	-155540	37,536	22,576	0	0	1520,094	37,536	0	22,576	Wind angle: 45 dgr					
Permanen	380C1F2 /	18902	10573	152533	18902	10573	-152533	37,804	21,146	0	0	1224,016	37,804	0	21,146						
Wind angl	380C1F3 /	19064	9716	149069	19064	9716	-149069	38,128	19,432	0	0	1518,547	38,128	0	19,432						
	Comp.con	5077	3124	42599	5077	3124	-42599	10,154	6,248	0	0	305,8781	10,154	0	6,248						
1b	GW / opgv	2742	390	19427	2742	390	-19427	5,484	0,78	0	0	78,78444	5,484	0	0,78	1b	0	1366,903	144,016	0	14,65
Wind, -20	380C1F1 /	21179	2256	149955	21179	2256	-149955	42,358	4,512	0	0	457,5188	42,358	0	4,512	Wind angle: 45 dgr					
Permanen	380C1F2 /	21192	2113	149788	21192	2113	-149788	42,384	4,226	0	0	398,2134	42,384	0	4,226						
Wind angl	380C1F3 /	21207	1942	149600	21207	1942	-149600	42,414	3,884	0	0	354,2851	42,414	0	3,884						
	Comp.con	5688	624	39600	5688	624	-39600	11,376	1,248	0	0	78,10094	11,376	0	1,248						
3	GW / opgv	8666	2007	48732	8666	2007	-48732	17,332	4,014	0	0	357,4141	17,332	0	4,014	3	0	3525,167	240,778	0	45,698
Wind+ice,	380C1F1 /	31317	6305	200684	31317	6305	-200684	62,634	12,61	0	0	1032,816	62,634	0	12,61	Wind angle: 45 dgr					
Permanen	380C1F2 /	31367	5906	200000	31367	5906	-200000	62,734	11,812	0	0	867,2569	62,734	0	11,812						
Wind angl	380C1F3 /	31423	5427	199232	31423	5427	-199232	62,846	10,854	0	0	908,8249	62,846	0	10,854						
	Comp.con	17616	3204	97171	17616	3204	-97171	35,232	6,408	0	0	358,855	35,232	0	6,408						
4	GW / opgv	3331	391	20947	3331	391	-20947	6,662	0,782	0	0	84,11942	6,662	0	0,782	4	0	1415,806	158,874	0	14,66
Constructi	380C1F1 /	23070	2257	146295	23070	2257	-146295	46,14	4,514	0	0	474,3174	46,14	0	4,514	Wind angle: 45 dgr					
Permanen	380C1F2 /	23079	2114	146159	23079	2114	-146159	46,158	4,228	0	0	414,9568	46,158	0	4,228						
Wind angl	380C1F3 /	23090	1943	146007	23090	1943	-146007	46,18	3,886	0	0	359,9302	46,18	0	3,886						
	Comp.con	6867	625	42878	6867	625	-42878	13,734	1,25	0	0	82,48215	13,734	0	1,25						
1a	GW / opgv	2149	3908	33122	2149	3908	-33122	4,298	7,816	0	0	566,0742	4,298	0	7,816	1a	0	9263,736	117,106	0	146,668
Wind, 10 c	380C1F1 /	17081	22584	210918	17081	22584	-210918	34,162	45,168	0	0	2860,734	34,162	0	45,168	Wind angle: 90 dgr					
Permanen	380C1F2 /	17244	21154	203490	17244	21154	-203490	34,488	42,308	0	0	2267,492	34,488	0	42,308						
Wind angl	380C1F3 /	17459	19437	194651	17459	19437	-194651	34,918	38,874	0	0	2977,536	34,918	0	38,874						
	Comp.con	4620	6251	58426	4620	6251	-58426	9,24	12,502	0	0	591,8996	9,24	0	12,502						
1b	GW / opgv	2680	781	20351	2680	781	-20351	5,36	1,562	0	0	132,9776	5,36	0	1,562	1b	0	2246,949	142,11	0	29,304
Wind, -20	380C1F1 /	20873	4512	153961	20873	4512	-153961	41,746	9,024	0	0	725,5399	41,746	0	9,024	Wind angle: 90 dgr					
Permanen	380C1F2 /	20920	4226	153319	20920	4226	-153319	41,84	8,452	0	0	607,1144	41,84	0	8,452						
Wind angl	380C1F3 /	20975	3884	152599	20975	3884	-152599	41,95	7,768	0	0	646,0112	41,95	0	7,768						
	Comp.con	5607	1249	40755	5607	1249	-40755	11,214	2,498	0	0	135,3063	11,214	0	2,498						
3	GW / opgv	8380	4015	53055	8380	4015	-53055	16,76	8,03	0	0	636,0116	16,76	0	8,03	3	0	6242,163	233,84	0	91,406
Wind+ice,	380C1F1 /	30287	12611	216313	30287	12611	-216313	60,574	25,222	0	0	1780,451	60,574	0	25,222	Wind angle: 90 dgr					
Permanen	380C1F2 /	30434	11813	213893	30434	11813	-213893	60,868	23,626	0	0	1449,728	60,868	0	23,626						
Wind angl	380C1F3 /	30607	10855	211140	30607	10855	-211140	61,214	21,71	0	0	1723,727	61,214	0	21,71						
	Comp.con	17212	6409	102860	17212	6409	-102860	34,424	12,818	0	0	652,2453	34,424	0	12,818						
4	GW / opgv	3288	781	21615	3288	781	-21615	6,576	1,562	0	0	138,3402	6,576	0	1,562	4	0	2297,993	157,492	0	29,32
Constructi	380C1F1 /	22845	4514	149572	22845	4514	-149572	45,69	9,028	0	0	743,1729	45,69	0	9,028	Wind angle: 90 dgr					
Permanen	380C1F2 /	22881	4229	149044	22881	4229	-149044	45,762	8,458	0	0	624,7104	45,762	0	8,458						
Wind angl	380C1F3 /	22921	3886	148453	22921	3886	-148453	45,842	7,772	0	0	651,9907	45,842	0	7,772						
	Comp.con	6811	1250	43716	6811	1250	-43716	13,622	2,5	0	0	139,7784	13,622	0	2,5						
1a	GW / opgv	2371	1953	22684	2371	1953	-22684	4,742	3,906	0	0	294,3322	4,742	0	3,906	1a	0	4862,867	128,364	0	73,308
Wind, 10 c	380C1F1 /	18768	11288	155540	18768	11288	-155540	37,536	22,576	0	0	1520,094	37,536	0	22,576	Wind angle: -45 dgr					
Permanen	380C1F2 /	18902	10573	152533	18902	10573	-152533	37,804	21,146	0	0	1224,016	37,804	0	21,146						
Wind angl	380C1F3 /	19064	9716	149069	19064	9716	-149069	38,128	19,432	0	0	1518,547	38,128	0	19,432						
	Comp.con	5077	3124	42599	5077	3124	-42599	10,154	6,248	0	0	305,8781	10,154	0	6,248						
1b	GW / opgv	2742	390	19427	2742	390	-19427	5,484	0,78	0	0	78,78444	5,484	0	0,78	1b	0	1366,903	144,016	0	14,65
Wind, -20	380C1F1 /	21179	2256	149955	21179	2256	-149955	42,358	4,512	0	0	457,5188	42,358	0	4,512	Wind angle: -45 dgr					
Permanen	380C1F2 /	21192	2113	149788	21192	2113	-149788	42,384	4,226	0	0	398,2134	42,384	0	4,226						
Wind angl	380C1F3 /	21207	1942	149600	21207	1942	-149600	42,414	3,884	0	0	354,2851	42,414	0	3,884						
	Comp.con	5688	624	39600	5688	624	-39600	11,376	1,248	0	0	78,10094	11,376	0	1,248						
3	GW / opgv	8666	2007	48732	8666	2007	-48732	17,332	4,014	0	0	357,4141	17,332	0	4,014	3	0	3525,167	240,778	0	45,698
Wind+ice,	380C1F1 /	31317	6305	200684	31317	6305	-200684	62,634	12,61	0	0	1032,816	62,634	0	12,61	Wind angle: -45 dgr					
Permanen	380C1F2 /	31367	5906	200000	31367	5906	-200000	62,734	11,812	0	0	867,2569	62,734	0	11,812						
Wind angl	380C1F3 /	31423	5427	199232	31423	5427	-199232	62,846	10,854	0	0	908,8249	62,846	0	10,854						
	Comp.con	17616	3204	97171	17616	3204	-97171	35,232	6,408	0	0	358,855	35,232	0	6,408						
4	GW / opgv	3331	391	20947	3331	391	-20947	6,662	0,782	0	0	84,11942	6,662	0	0,782	4	0	1415,806	158,874	0	14,66
Constructi	380C1F1 /	23070	2257	146295	23070	2257	-146295	46,14	4,514	0	0	474,3174	46,14	0	4,514	Wind angle: -45 dgr					
Permanen	380C1F2 /	23079	2114	146159	23079	2114	-146159	46,158	4,228	0	0	414,9568	46,158	0	4,228						
Wind angl	380C1F3 /	23090	1943	146007	23090	1943	-146007	46,18	3,886	0	0	359,9302	46,18	0	3,886						
	Comp.con	6867	625	42878	6867	625	-42878	13,734	1,25	0	0	82,48215	13,734	0	1,25						

W2H400+1 | 22-AE

Hoogte mast	Ber & bijlage	72 m	
Hoogte onderste stroomdraad (F3)		42 m	
		Hoogte	Excentriciteit ophanging t.o.v. hart mast
Bliksemdraad = GW / (H_{mast} -	0,57 m =	71,43 m	0,76 m
1e traverse - 380C1F1 F2 +	10 m =	62 m	0 m
2e traverse - 380C1F2 F3 +	10 m =	52 m	0 m
3e traverse - 380C1F3		42 m	0 m
Passieve lijn = Comp C F3 -	7,5 m =	34,5 m	2,075 m

Uit mast (excl belastingsfactoren)			Uit lijnen (incl belastingsfactoren)				
N	V	M	Nmin	Nmax	Vmax	Mlangs;ma	Mdwars;max
[kN]	[kN]	[kNm]	[kN]	[kN]	[kN]	[kNm]	[kNm]
1136	167	5546	95	277	919	16496	47095
1136	167	5546	95	289	255	1196	15497
1136	167	5546	95	289	919	16496	47095

			Belastingen uit lijnen					Belasting uit mast		
			M_{langs}	M_{dwars}	N	V_{langs}	V_{dwars}	N	V	M
Perm load 1,2	0 deg	1a	0	24634	140	0	478	1136	167	5546
		1b	0	25481	145	0	495	1136	31	1040
		3	0	40126	**277**	0	785	1136	47	1560
		4	0	26097	168	0	508	1136	31	1040
		6	0	24051	158	0	468			
	45 deg	1a	-13641	34534	134	-260	667	1136	167	5546
		1b	-673	26586	144	-13	516	1136	31	1040
		3	-2641	43790	274	-50	855	1136	47	1560
		4	-440	27099	168	-8	527	1136	31	1040
	90 deg	1a	0	43540	128	0	839	1136	167	5546
		1b	0	27586	143	0	535	1136	31	1040
		3	0	**47095**	272	0	**919**	1136	47	1560
		4	0	28019	167	0	545	1136	31	1040
	-45 deg	1a	13641	34534	134	260	667	1136	167	5546
		1b	673	26586	144	13	516	1136	31	1040
		3	2641	43790	274	50	855	1136	47	1560
		4	440	27099	168	8	527	1136	31	1040
Perm load 0,9	0 deg	1a	0	20432	105	0	396	852	167	5546
		1b	0	20672	110	0	402	852	31	1040
		3	0	36332	244	0	712	852	47	1560
		4	0	21724	134	0	423	852	31	1040
		6	0	**17287**	107	0	**336**			
	45 deg	1a	**-16496**	31453	100	**-315**	607	852	167	5546
		1b	-1108	21968	109	-21	426	852	31	1040
		3	-3298	40284	240	-62	787	852	47	1560
		4	-706	22843	133	-13	444	852	31	1040
	90 deg	1a	0	41663	**95**	0	802	852	167	5546
		1b	0	23121	108	0	448	852	31	1040
		3	0	43826	238	0	855	852	47	1560
		4	0	23855	133	0	463	852	31	1040
	-45 deg	1a	**16496**	31453	100	**315**	607	852	167	5546
		1b	1108	21968	109	21	426	852	31	1040
		3	3298	40284	240	62	787	852	47	1560
		4	706	22843	133	13	444	852	31	1040

regel				Totaal												
			Loadcase	M_{langs}	M_{dwars}	N	V_{langs}	V_{dwars}	Totaal moment							
1	Perm load 1,2	0 deg	1a	5546	24634	1276	167	478	25250,99	1						
2	Perm load 1,2	0 deg	1b	1040	25481	1281	31	495	25501,91	2						
3	Perm load 1,2	0 deg	3	1560	40126	1413	47	785	40156,25	3			x			
4	Perm load 1,2	0 deg	4	1040	26097	1304	31	508	26117,52	4						
5	Perm load 1,2	0 deg	6							5						
6										6						
7	Perm load 1,2	45 deg	1a	17562	38455	1270	378	785	42275,86	7						
8	Perm load 1,2	45 deg	1b	1409	27321	1280	35	539	27357,24	8						
9	Perm load 1,2	45 deg	3	3744	44893	1410	83	889	45048,77	9						
10	Perm load 1,2	45 deg	4	1175	27834	1304	30	549	27858,79	10						
11										11						
12	Perm load 1,2	90 deg	1a	0	49086	1264	0	1006	49086,48	12		x			x	x
13	Perm load 1,2	90 deg	1b	0	28626	1279	0	567	28625,92	13						
14	Perm load 1,2	90 deg	3	0	48655	1408	0	965	48654,79	14						
15	Perm load 1,2	90 deg	4 Construc	0	29059	1303	0	576	29058,57	15						
16										16						
17	Perm load 1,2	-45 deg	1a	17562	38455	1270	378	785	42275,86	17						
18	Perm load 1,2	-45 deg	1b	1409	27321	1280	35	539	27357,24	18						
19	Perm load 1,2	-45 deg	3	3744	44893	1410	83	889	45048,77	19						
20	Perm load 1,2	-45 deg	4	1175	27834	1304	30	549	27858,79	20						
21										21						
22	Perm load 0,9	0 deg	1a	5546	20432	957	167	396	21170,96	22						
23	Perm load 0,9	0 deg	1b	1040	20672	962	31	402	20697,85	23						
24	Perm load 0,9	0 deg	3	1560	36332	1096	47	712	36365,9	24						
25	Perm load 0,9	0 deg	4	1040	21724	986	31	423	21748,4	25						
26	Perm load 0,9	0 deg	6							26						
27										27						
28	Perm load 0,9	45 deg	1a	20418	35375	952	433	725	40844,66	28	x			x		
29	Perm load 0,9	45 deg	1b	1844	22704	961	43	449	22778,36	29						
30	Perm load 0,9	45 deg	3	4401	41387	1092	95	820	41620,49	30						
31	Perm load 0,9	45 deg	4 Construc	1441	23578	985	35	466	23622,19	31						
32										32						
33	Perm load 0,9	90 deg	1a	0	47209	947	0	969	47208,8	33						
34	Perm load 0,9	90 deg	1b	0	24161	960	0	480	24161,27	34						
35	Perm load 0,9	90 deg	3	0	45386	1090	0	902	45385,96	35						
36	Perm load 0,9	90 deg	4	0	24895	985	0	495	24894,82	36						
37										37						
38	Perm load 0,9	-45 deg	1a	20418	35375	952	433	725	40844,66	38	x			x		
39	Perm load 0,9	-45 deg	1b	1844	22704	961	43	449	22778,36	39						
40	Perm load 0,9	-45 deg	3	4401	41387	1092	95	820	41620,49	40						
41	Perm load 0,9	-45 deg	4	1441	23578	985	35	466	23622,19	41						
			Max	20418	49086	1413	433	1006	49086							

samenvatting

	Mast	Bijlage		Wind	Loadcase	M_{langs}	M_{dwars}	N	V_{langs}	V_{dwars}
3	W2H400+122-AE		Perm load	0 deg	3	1560	40126	1413	47	785
12	W2H400+122-AE		Perm load	90 deg	1a	0	49086	1264	0	1006
28	W2H400+122-AE		Perm load	45 deg	1a	20418	35375	952	433	725

W2H400+15 TOWER (rev 6.0, date: 05 Appendix AE
Loadcases for tower strength (ultimate limit state)

Loadcase	Attachment point	**AHEAD**			**BACK**			Totaal Vert	Dwars	Langs	Belastingen op mastvoet, per lijn M_{langs}	M_{dwars}	N	V_{langs}	V_{dwars}	Belasting op mastvoet, belastinggeval	M_{langs}	M_{dwars}	N	V_{langs}	V_{dwars}
		[N]	[N]	[N]	[N]	[N]	[N]	[kN]	[kN]	[kN]											
1a	380C1F1	20521	70817	137853	20521	70817	-137853	41,042	141,634	0	0	8781,308	41,042	0	141,634	1a	0	24634,41	139,77	0	478,086
Wind, 10 (	380C1F2	20551	70077	137220	20551	70077	-137220	41,102	140,154	0	0	7288,008	41,102	0	140,154	Wind angle: 0 dgr					
Permaner	380C1F3	20585	69190	136505	20585	69190	-136505	41,17	138,38	0	0	5811,96	41,17	0	138,38						
Wind angl	GW / opg	2660	9854	18650	2660	9854	-18650	5,32	19,708	0	0	1411,786	5,32	0	19,708						
	Comp. gl	5568	19105	37363	5568	19105	-37363	11,136	38,21	0	0	1341,352	11,136	0	38,21						
1b	380C1F1	21291	73020	153791	21291	73020	-153791	42,582	146,04	0	0	9054,48	42,582	0	146,04	1b	0	25480,7	144,796	0	495,328
Wind, -20	380C1F2	21293	72930	153789	21293	72930	-153789	42,586	145,86	0	0	7584,72	42,586	0	145,86	Wind angle: 0 dgr					
Permaner	380C1F3	21294	72821	153791	21294	72821	-153791	42,588	145,642	0	0	6116,964	42,588	0	145,642						
Wind angl	GW / opg	2774	9516	19911	2774	9516	-19911	5,548	19,032	0	0	1363,672	5,548	0	19,032						
	Comp. gl	5746	19377	40834	5746	19377	-40834	11,492	38,754	0	0	1360,859	11,492	0	38,754						
3	380C1F1	35340	104437	216136	35340	104437	-216136	70,68	208,874	0	0	12950,19	70,68	0	208,874	3	0	40125,94	277,124	0	785,256
Wind+ice,	380C1F2	35346	104171	216098	35346	104171	-216098	70,692	208,342	0	0	10833,78	70,692	0	208,342	Wind angle: 0 dgr					
Permaner	380C1F3	35353	103845	216063	35353	103845	-216063	70,706	207,69	0	0	8722,98	70,706	0	207,69						
Wind angl	GW / opg	10766	26811	54945	10766	26811	-54945	21,532	53,622	0	0	3846,584	21,532	0	53,622						
	Comp. gl	21757	53364	110739	21757	53364	-110739	43,514	106,728	0	0	3772,408	43,514	0	106,728						
4	380C1F1	24365	73802	155465	24365	73802	-155465	48,73	147,604	0	0	9151,448	48,73	0	147,604	4	0	26096,81	168,234	0	507,836
Construction/mainte		24367	73715	155471	24367	73715	-155471	48,734	147,43	0	0	7666,36	48,734	0	147,43	Wind angle: 0 dgr					
Permaner	380C1F3	24368	73610	155482	24368	73610	-155482	48,736	147,22	0	0	6183,24	48,736	0	147,22						
Wind angl	GW / opg	3606	10790	22642	3606	10790	-22642	7,212	21,58	0	0	1546,941	7,212	0	21,58						
	Comp. gl	7411	22001	46460	7411	22001	-46460	14,822	44,002	0	0	1548,825	14,822	0	44,002						
6	380C1F1	23267	68714	147358	23267	68714	-147358	46,534	137,428	0	0	8520,536	46,534	0	137,428	6	0	24050,74	158,302	0	467,762
Permaner	380C1F2	23267	68714	147358	23267	68714	-147358	46,534	137,428	0	0	7146,256	46,534	0	137,428	0					
Permaner	380C1F3	23267	68714	147358	23267	68714	-147358	46,534	137,428	0	0	5771,976	46,534	0	137,428						
	GW / opg	3042	9033	19370	3042	9033	-19370	6,084	18,066	0	0	1295,078	6,084	0	18,066						
	Comp. gl	6308	18706	40115	6308	18706	-40115	12,616	37,412	0	0	1316,892	12,616	0	37,412						
1a	380C1F1	20655	67316	135180	18678	133783	-217562	39,333	201,099	-82,382	-5107,68	12468,14	39,333	-82,382	201,099	1a	-13640,7	34533,75	134,162	-259,883	667,31
Wind, 10 (	380C1F2	20669	66909	134934	18783	127798	-209458	39,452	194,707	-74,524	-3875,25	10124,76	39,452	-74,524	194,707	Wind angle: 45 dgr					
Permaner	380C1F3	20685	66420	134662	18928	120398	-199459	39,613	186,818	-64,797	-2721,47	7846,356	39,613	-64,797	186,818						
Wind angl	GW / opg	2689	9134	17962	2388	21919	-34725	5,077	31,053	-16,763	-1197,38	2221,974	5,077	-16,763	31,053						
	Comp. gl	5601	18213	36696	5086	35420	-58113	10,687	53,633	-21,417	-738,887	1872,514	10,687	-21,417	53,633						
1b	380C1F1	21298	72578	153808	21014	80120	-157968	42,312	152,698	-4,16	-257,92	9467,276	42,312	-4,16	152,698	1b	-673,266	26585,65	143,968	-12,597	516,383
Wind, -20	380C1F2	21299	72523	153815	21049	79377	-157317	42,348	151,9	-3,502	-182,104	7898,8	42,348	-3,502	151,9	Wind angle: 45 dgr					
Permaner	380C1F3	21300	72455	153826	21090	78487	-156581	42,39	150,942	-2,755	-115,71	6339,564	42,39	-2,755	150,942						
Wind angl	GW / opg	2776	9432	19903	2715	10959	-21049	5,491	20,391	-1,146	-81,8588	1460,702	5,491	-1,146	20,391						
	Comp. gl	5747	19264	40839	5680	21188	-41873	11,427	40,452	-1,034	-35,673	1419,305	11,427	-1,034	40,452						
3	380C1F1	35367	103131	216037	34457	126455	-232463	69,824	229,586	-16,426	-1018,41	14234,33	69,824	-16,426	229,586	3	-2640,56	43790,01	274,347	-49,543	855,296
Wind+ice,	380C1F2	35370	102970	216042	34558	124142	-230144	69,928	227,112	-14,102	-733,304	11809,82	69,928	-14,102	227,112	Wind angle: 45 dgr					
Permaner	380C1F3	35373	102773	216053	34680	121365	-227465	70,053	224,138	-11,412	-479,304	9413,796	70,053	-11,412	224,138						
Wind angl	GW / opg	10773	26402	54947	10526	33367	-58934	21,299	59,769	-3,987	-284,791	4285,487	21,299	-3,987	59,769						
	Comp. gl	21765	52800	110805	21478	61891	-114421	43,243	114,691	-3,616	-124,752	4046,569	43,243	-3,616	114,691						
4	380C1F1	24371	73374	155516	24166	80308	-158363	48,537	153,682	-2,847	-176,514	9528,284	48,537	-2,847	153,682	4	-439,626	27098,7	167,649	-8,183	526,943
Construction/mainte		24371	73321	155527	24192	79641	-157877	48,563	152,962	-2,35	-122,2	7954,024	48,563	-2,35	152,962	Wind angle: 45 dgr					
Permaner	380C1F3	24372	73255	155540	24222	78841	-157333	48,594	152,096	-1,793	-75,306	6388,032	48,594	-1,793	152,096						
Wind angl	GW / opg	3607	10712	22647	3566	12013	-23309	7,173	22,725	-0,662	-47,2867	1628,698	7,173	-0,662	22,725						
	Comp. gl	7413	21894	46478	7369	23584	-47009	14,782	45,478	-0,531	-18,3195	1599,664	14,782	-0,531	45,478						
1a	380C1F1	18785	127655	209263	18785	127655	-209263	37,57	255,31	0	0	15829,22	37,57	0	255,31	1a	0	43540,48	128,464	0	839,28
Wind, 10 (	380C1F2	18892	122106	201763	18892	122106	-201763	37,784	244,212	0	0	12699,02	37,784	0	244,212	Wind angle: 90 dgr					
Permaner	380C1F3	19040	115260	192543	19040	115260	-192543	38,08	230,52	0	0	9681,84	38,08	0	230,52						
Wind angl	GW / opg	2400	20807	33198	2400	20807	-33198	4,8	41,614	0	0	2976,136	4,8	0	41,614						
	Comp. gl	5115	33812	55912	5115	33812	-55912	10,23	67,624	0	0	2354,255	10,23	0	67,624						
1b	380C1F1	21050	79359	157302	21050	79359	-157302	42,1	158,718	0	0	9840,516	42,1	0	158,718	1b	0	27586,04	143,32	0	535,46
Wind, -20	380C1F2	21081	78689	156744	21081	78689	-156744	42,162	157,378	0	0	8183,656	42,162	0	157,378	Wind angle: 90 dgr					
Permaner	380C1F3	21118	77887	156114	21118	77887	-156114	42,236	155,774	0	0	6542,508	42,236	0	155,774						
Wind angl	GW / opg	2722	10801	20881	2722	10801	-20881	5,444	21,602	0	0	1547,168	5,444	0	21,602						
	Comp. gl	5689	20994	41706	5689	20994	-41706	11,378	41,988	0	0	1472,195	11,378	0	41,988						
3	380C1F1	34560	124088	230090	34560	124088	-230090	69,12	248,176	0	0	15386,91	69,12	0	248,176	3	0	47094,98	272,086	0	918,52
Wind+ice,	380C1F2	34652	121998	228064	34652	121998	-228064	69,304	243,996	0	0	12687,79	69,304	0	243,996	Wind angle: 90 dgr					
Permaner	380C1F3	34763	119490	225734	34763	119490	-225734	69,526	238,98	0	0	10037,16	69,526	0	238,98						
Wind angl	GW / opg	10554	32678	58339	10554	32678	-58339	21,108	65,356	0	0	4684,421	21,108	0	65,356						
	Comp. gl	21514	61006	113803	21514	61006	-113803	43,028	122,012	0	0	4298,697	43,028	0	122,012						
4	380C1F1	24193	79625	157866	24193	79625	-157866	48,386	159,25	0	0	9873,5	48,386	0	159,25	4	0	28018,69	167,192	0	544,502
Construction/mainte		24216	79023	157453	24216	79023	-157453	48,432	158,046	0	0	8218,392	48,432	0	158,046	Wind angle: 90 dgr					
Permaner	380C1F3	24242	78299	156992	24242	78299	-156992	48,484	156,598	0	0	6577,116	48,484	0	156,598						
Wind angl	GW / opg	3571	11883	23201	3571	11883	-23201	7,142	23,766	0	0	1703,033	7,142	0	23,766						
	Comp. gl	7374	23421	46907	7374	23421	-46907	14,748	46,842	0	0	1646,651	14,748	0	46,842						
1a	380C1F1	18678	133783	217562	20655	67316	-135180	39,333	201,099	82,382	5107,684	12468,14	39,333	82,382	201,099	1a	13640,67	34533,75	134,162	259,883	667,31
Wind, 10 (	380C1F2	18783	127798	209458	20669	66909	-134934	39,452	194,707	74,524	3875,248	10124,76	39,452	74,524	194,707	Wind angle: -45 dgr					
Permaner	380C1F3	18928	120398	199459	20685	66420	-134662	39,613	186,818	64,797	2721,474	7846,356	39,613	64,797	186,818						
Wind angl	GW / opg	2388	21919	34725	2689	9134	-17962	5,077	31,053	16,763	1197,381	2221,974	5,077	16,763	31,053						
	Comp. gl	5086	35420	58113	5601	18213	-36696	10,687	53,633	21,417	738,8865	1872,514	10,687	21,417	53,633						
1b	380C1F1	21014	80120	157968	21298	72578	-153808	42,312	152,698	4,16	257,92	9467,276	42,312	4,16	152,698	1b	673,2658	26585,65	143,968	12,597	516,383
Wind, -20	380C1F2	21049	79377	157317	21299	72523	-153815	42,348	151,9	3,502	182,104	7898,8	42,348	3,502	151,9	Wind angle: -45 dgr					
Permaner	380C1F3	21090	78487	156581	21300	72455	-153826	42,39	150,942	2,755	115,71	6339,564	42,39	2,755	150,942						
Wind angl	GW / opg	2715	10959	21049	2776	9432	-19903	5,491	20,391	1,146	81,85878	1460,702	5,491	1,146	20,391						
	Comp. gl	5680	21188	41873	5747	19264	-40839	11,427	40,452	1,034	35,673	1419,305	11,427	1,034	40,452						
3	380C1F1	34457	126455	232463	35367	103131	-216037	69,824	229,586	16,426	1018,412	14234,33	69,824	16,426	229,586	3	2640,563	43790,01	274,347	49,543	855,296
Wind+ice,	380C1F2	34558	124142	230144	35370	102970	-216042	69,928	227,112	14,102	733,304	11809,82	69,928	14,102	227,112	Wind angle: -45 dgr					
Permaner	380C1F3	34680	121365	227465	35373	102773	-216053	70,053	224,138	11,412	479,304	9413,796	70,053	11,412	224,138						
Wind angl	GW / opg	10526	33367	58934	10773	26402	-54947	21,299	59,769	3,987	284,7914	4285,487	21,299	3,987	59,769						
0 Comp. gl		21478	61891	114421	21765	52800	-110805	43,243	114,691	3,616	124,752	4046,569	43,243	3,616	114,691						
4	380C1F1	24166	80308	158363	24371	73374	-155516	48,537	153,682	2,847	176,514	9528,284	48,537	2,847	153,682	4	439,6262	27098,7	167,649	8,183	526,943
Construction/mainte		24192	79641	157877	24371	73321	-155527	48,563	152,962	2,35	122,2	7954,024	48,563	2,35	152,962	Wind angle: -45 dgr					
Permaner	380C1F3	24222	78841	157333	24372	73255	-155540	48,594	152,096	1,793	75,306	6388,032	48,594	1,793	152,096						
Wind angl	GW / opg	3566	12013	23309	3607	10712	-22647	7,173	22,725	0,662	47,28666	1628,698	7,173	0,662	22,725						
	Comp. gl	7369	23584	47009	7413	21894	-46478	14,782	45,478	0,531	18,3195	1599,664	14,782	0,531	45,478						
1a	380C1F1	15404	58916	112334	15404	58916	-112334	30,808	117,832	0	0	7305,584	30,808	0	117,832	1a	0	20431,63	104,988	0	396,156
Wind, 10 (	380C1F2	15441	58036	111402	15441	58036	-111402	30,882	116,072	0	0	6035,744	30,882	0	116,072	Wind angle: 0 dgr					
Permaner	380C1F3	15484	56985	110333	15484	56985	-110333	30,968	113,97	0	0	4786,74	30,968	0	113,97						
Wind angl	GW / opg	1985	8360	15446	1985	8360	-15446	3,97	16,72	0	0	1197,327	3,97	0	16,72						
	Comp. gl	4180	15781	30235	4180	15781	-30235	8,36	31,562	0	0	1106,236	8,36	0	31,562						
1b	380C1F1	16204	59319	124410	16204	59319	-124410	32,408	118,638	0	0	7355,556	32,408	0	118,638	1b	0	20671,71	110,176	0	401,796
Wind, -20	380C1F2	16206	59222	124392	16206	59222	-124392	32,412	118,444	0	0	6159,088	32,412	0	118,444	Wind angle: 0 dgr					
Permaner	380C1F3	16209	59103	124375	16209	59103	-124375	32,418	118,206	0	0	4964,652	32,418	0	118,206						
Wind angl	GW / opg	2106	7671	15954	2106	7671	-15954	4,212	15,342	0	0	1099,08	4,212	0	15,342						
	Comp. gl	4363	15583	32696	4363	15583	-32696	8,726	31,166	0	0	1093,333	8,726	0	31,166						
3	380C1F1	30394	93348	192357	30394	93348	-192357	60,788	186,696	0	0	11575,15	60,788	0	186,696	3	0	36332,44	243,6	0	711,68
Wind+ice,	380C1F2	30402	93067	192288	30402	93067	-192288	60,804	186,134	0	0	9678,968	60,804	0	186,134	Wind angle: 0 dgr					
Permaner	380C1F3	30410	92726	192219	30410	92726	-192219	60,82	185,452	0	0	7788,984	60,82	0	185,452						
Wind angl	GW / opg	10138	25681	52521	10138	25681	-52521	20,276	51,362	0	0	3684,197	20,276	0	51,362						
	Comp. gl	20456	51018	105707	20456	51018	-105707	40,912	102,036	0	0	3605,134	40,912	0	102,036						
4	380C1F1	19350	61293	128640	19350	61293	-128640	38,7	122,586	0	0	7600,332	38,7	0	122,586	4	0	21723,52	134,12	0	422,816
Construction/mainte		19351	61202	128636	19351	61202	-128636	38,702	122,404	0	0	6365,008	38,702	0	122,404	Wind angle: 0 dgr					
Permaner	380C1F3	19353	61090	128635	19353	61090	-128635	38,706	122,18	0	0	5131,56	38,706	0	122,18						

Wind angl	GW / opg:2951	9169	19167	2951	9169	-19167	5,902	18,338	0	0	1314,369	5,902	0	18,338													
	Comp. gl 6055	18654	39282	6055	18654	-39282	12,11	37,308	0	0	1312,254	12,11	0	37,308													
6	380C1F1 15721	49434	106011	15721	49434	-106011	31,442	98,868	0	0	6129,816	31,442	0	98,868		6	0	17286,68	106,944	0	336,22						
Permanen	380C1F2 15721	49434	106011	15721	49434	-106011	31,442	98,868	0	0	5141,136	31,442	0	98,868		0											
Permanen	380C1F3 15721	49434	106011	15721	49434	-106011	31,442	98,868	0	0	4152,456	31,442	0	98,868													
	GW / opg:2052	6441	13813	2052	6441	-13813	4,104	12,882	0	0	923,2803	4,104	0	12,882													
	Comp. gl 4257	13367	28666	4257	13367	-28666	8,514	26,734	0	0	939,9896	8,514	0	26,734													
1a	380C1F1 15573	54776	108291	13772	129062	-207442	29,345	183,838	-99,151	-6147,36	11397,96	29,345	-99,151	183,838		1a	-16496,4	31453,41	100,092	-315,089	607,151						
Wind, 10	380C1F2 15591	54301	107899	13844	122726	-198585	29,435	177,027	-90,686	-4715,67	9205,404	29,435	-90,686	177,027		Wind angle:	45 dgr										
Permanen	380C1F3 15613	53733	107457	13946	114832	-187528	29,559	168,565	-80,071	-3362,98	7079,73	29,559	-80,071	168,565													
Wind angl	GW / opg:2019	7504	14466	1765	21457	-33735	3,784	28,961	-19,269	-1376,38	2071,56	3,784	-19,269	28,961													
	Comp. gl 4221	14729	29224	3748	34031	-55136	7,969	48,76	-25,912	-893,964	1698,756	7,969	-25,912	48,76													
1b	380C1F1 16214	58844	124356	15835	67625	-131175	32,049	126,469	-6,819	-422,778	7841,078	32,049	-6,819	126,469		1b	-1108,3	21968,33	109,075	-20,833	426,481						
Wind, -20	380C1F2 16215	58785	124356	15880	66732	-130204	32,095	125,517	-5,848	-304,096	6526,884	32,095	-5,848	125,517		Wind angle:	45 dgr										
Permanen	380C1F3 16217	58714	124358	15933	65665	-129088	32,15	124,379	-4,73	-198,66	5223,918	32,15	-4,73	124,379													
Wind angl	GW / opg:2108	7579	15929	2031	9382	-17668	4,139	16,961	-1,739	-124,217	1214,67	4,139	-1,739	16,961													
	Comp. gl 4365	15461	32684	4277	17694	-34381	8,642	33,155	-1,697	-58,5465	1161,78	8,642	-1,697	33,155													
3	380C1F1 30427	91981	192128	29399	117316	-212871	59,826	209,297	-20,745	-1286,19	12976,41	59,826	-20,745	209,297		3	-3297,74	40284,23	240,49	-62,001	787,177						
Wind+ice,	380C1F2 30430	91814	192118	29507	114787	-210087	59,937	206,601	-17,969	-934,388	10743,25	59,937	-17,969	206,601		Wind angle:	45 dgr										
Permanen	380C1F3 30433	91610	192114	29639	111746	-206842	60,072	203,356	-14,728	-618,576	8540,952	60,072	-14,728	203,356													
Wind angl	GW / opg:10146	25265	52510	9886	32432	-56932	20,032	57,697	-4,422	-315,863	4136,521	20,032	-4,422	57,697													
	Comp. gl 20464	50447	105759	20159	59779	-109896	40,623	110,226	-4,137	-142,727	3887,09	40,623	-4,137	110,226													
4	380C1F1 19356	60845	128647	19097	68566	-133185	38,453	129,411	-4,538	-281,356	8023,482	38,453	-4,538	129,411		4	-705,538	22842,9	133,378	-13,209	444,144						
Construction/mainte	19357	60790	128653	19129	67801	-132488	38,486	128,591	-3,835	-199,42	6686,732	38,486	-3,835	128,591		Wind angle:	45 dgr										
Permanen	380C1F3 19358	60721	128662	19166	66885	-131697	38,524	127,606	-3,035	-127,47	5359,452	38,524	-3,035	127,606													
Wind angl	GW / opg:2953	9088	19164	2903	10524	-20116	5,856	19,612	-0,952	-68,0014	1405,336	5,856	-0,952	19,612													
	Comp. gl 6057	18543	39292	6002	20381	-40141	12,059	38,924	-0,849	-29,2905	1367,9	12,059	-0,849	38,924													
1a	380C1F1 13846	122573	198372	13846	122573	-198372	27,692	245,146	0	0	15199,05	27,692	0	245,146		1a	0	41662,8	94,672	0	802,332						
Wind, 10	380C1F2 13921	116660	190090	13921	116660	-190090	27,842	233,32	0	0	12132,64	27,842	0	233,32		Wind angle:	90 dgr										
Permanen	380C1F3 14027	109306	179779	14027	109306	-179779	28,054	218,612	0	0	9181,704	28,054	0	218,612													
Wind angl	GW / opg:1773	20306	32125	1773	20306	-32125	3,546	40,612	0	0	2903,61	3,546	0	40,612													
	Comp. gl 3769	32321	52715	3769	32321	-52715	7,538	64,642	0	0	2245,79	7,538	0	64,642													
1b	380C1F1 15881	66711	130181	15881	66711	-130181	31,762	133,422	0	0	8272,164	31,762	0	133,422		1b	0	23121,39	108,192	0	448,446						
Wind, -20	380C1F2 15921	65908	129337	15921	65908	-129337	31,842	131,816	0	0	6854,432	31,842	0	131,816		Wind angle:	90 dgr										
Permanen	380C1F3 15968	64949	128371	15968	64949	-128371	31,936	129,898	0	0	5455,716	31,936	0	129,898													
Wind angl	GW / opg:2039	9193	17433	2039	9193	-17433	4,078	18,386	0	0	1316,411	4,078	0	18,386													
	Comp. gl 4287	17462	34131	4287	17462	-34131	8,574	34,924	0	0	1222,669	8,574	0	34,924													
3	380C1F1 29510	114727	210022	29510	114727	-210022	59,02	229,454	0	0	14226,15	59,02	0	229,454		3	0	43826,15	237,92	0	854,888						
Wind+ice,	380C1F2 29609	112439	207570	29609	112439	-207570	59,218	224,878	0	0	11693,66	59,218	0	224,878		Wind angle:	90 dgr										
Permanen	380C1F3 29730	109691	204725	29730	109691	-204725	59,46	219,382	0	0	9214,044	59,46	0	219,382													
Wind angl	GW / opg:9915	31721	56288	9915	31721	-56288	19,83	63,442	0	0	4546,733	19,83	0	63,442													
	Comp. gl 20196	58866	109214	20196	58866	-109214	40,392	117,732	0	0	4145,567	40,392	0	117,732													
4	380C1F1 19129	67783	132472	19129	67783	-132472	38,258	135,566	0	0	8405,092	38,258	0	135,566		4	0	23854,94	132,792	0	463,442						
Construction/mainte	19158	67094	131873	19158	67094	-131873	38,316	134,188	0	0	6977,776	38,316	0	134,188		Wind angle:	90 dgr										
Permanen	380C1F3 19191	66269	131195	19191	66269	-131195	38,382	132,538	0	0	5566,596	38,382	0	132,538													
Wind angl	GW / opg:2909	10377	19972	2909	10377	-19972	5,818	20,754	0	0	1486,88	5,818	0	20,754													
	Comp. gl 6009	20198	39998	6009	20198	-39998	12,018	40,396	0	0	1418,599	12,018	0	40,396													
1a	380C1F1 13772	129062	207442	15573	54776	-108291	29,345	183,838	99,151	6147,362	11397,96	29,345	99,151	183,838		1a	16496,36	31453,41	100,092	315,089	607,151						
Wind, 10	380C1F2 13844	122726	198585	15591	54301	-107899	29,435	177,027	90,686	4715,672	9205,404	29,435	90,686	177,027		Wind angle:	-45 dgr										
Permanen	380C1F3 13946	114832	187528	15613	53733	-107457	29,559	168,565	80,071	3362,982	7079,73	29,559	80,071	168,565													
Wind angl	GW / opg:1765	21457	33735	2019	7504	-14466	3,784	28,961	19,269	1376,385	2071,56	3,784	19,269	28,961													
	Comp. gl 3748	34031	55136	4221	14729	-29224	7,969	48,76	25,912	893,964	1698,756	7,969	25,912	48,76													
1b	380C1F1 15835	67625	131175	16214	58844	-124356	32,049	126,469	6,819	422,778	7841,078	32,049	6,819	126,469		1b	1108,297	21968,33	109,075	20,833	426,481						
Wind, -20	380C1F2 15880	66732	130204	16215	58785	-124356	32,095	125,517	5,848	304,096	6526,884	32,095	5,848	125,517		Wind angle:	-45 dgr										
Permanen	380C1F3 15933	65665	129088	16217	58714	-124358	32,15	124,379	4,73	198,66	5223,918	32,15	4,73	124,379													
Wind angl	GW / opg:2031	9382	17668	2108	7579	-15929	4,139	16,961	1,739	124,2168	1214,67	4,139	1,739	16,961													
	Comp. gl 4277	17694	34381	4365	15461	-32684	8,642	33,155	1,697	58,5465	1161,78	8,642	1,697	33,155													
3	380C1F1 29399	117316	212871	30427	91981	-192126	59,826	209,297	20,745	1286,19	12976,41	59,826	20,745	209,297		3	3297,744	40284,23	240,49	62,001	787,177						
Wind+ice,	380C1F2 29507	114787	210087	30430	91814	-192118	59,937	206,601	17,969	934,388	10743,25	59,937	17,969	206,601		Wind angle:	-45 dgr										
Permanen	380C1F3 29639	111746	206842	30433	91610	-192114	60,072	203,356	14,728	618,576	8540,952	60,072	14,728	203,356													
Wind angl	GW / opg:9886	32432	56932	10146	25265	-52510	20,032	57,697	4,422	315,8635	4136,521	20,032	4,422	57,697													
0 Comp. gl	20159	59779	109896	20464	50447	-105759	40,623	110,226	4,137	142,7265	3887,09	40,623	4,137	110,226													
4	380C1F1 19097	68566	133185	19356	60845	-128647	38,453	129,411	4,538	281,356	8023,482	38,453	4,538	129,411		4	705,5379	22842,9	133,378	13,209	444,144						
Construction/mainte	19129	67801	132488	19357	60790	-128653	38,486	128,591	3,835	199,42	6686,732	38,486	3,835	128,591		Wind angle:	-45 dgr										
Permanen	380C1F3 19166	66885	131697	19358	60721	-128662	38,524	127,606	3,035	127,47	5359,452	38,524	3,035	127,606													
Wind angl	GW / opg:2903	10524	20116	2953	9088	-19164	5,856	19,612	0,952	68,00136	1405,336	5,856	0,952	19,612													
	Comp. gl 6002	20381	40141	6057	18543	-39292	12,059	38,924	0,849	29,2905	1367,9	12,059	0,849	38,924													

W2H400+22 - AE1

Hoogte mast	Ber & bijlage	72	m	
Hoogte onderste stroomdraad (F3)		42	m	
		Hoogte		Excentriciteit ophanging t.o.v. hart mast
Bliksemdraad = GW / tH_{max} -	0,57 m =	71,43	m	0,76 m
1e traverse - 380C1F1 F2 +	10 m =	62	m	0 m
2e traverse - 380C1F2 F3 +	10 m =	52	m	0 m
3e traverse - 380C1F3		42	m	0 m
Passieve lijn = Comp C F3 -	7,5 m =	34,5	m	2,075 m

Uit mast (excl belastingsfactoren)			Uit lijnen (incl belastingsfactoren)				
N	V	M	Nmin	Nmax	Vmax	Mlangs;ma	Mdwars;max
[kN]	[kN]	[kNm]	[kN]	[kN]	[kN]	[kNm]	[kNm]
1136	167	5546	95	289	255	1196	15497

			Belastingen uit lijnen					Belasting uit mast		
			M_{langs}	M_{dwars}	N	V_{langs}	V_{dwars}	N	V	M
Perm load 1,2	0 deg	1a	0	1538	148	0	18	1136	167	5546
		1b	0	1703	152	0	20	1136	31	1040
		3	0	2784	**289**	0	31	1136	47	1560
		4	0	1809	176	0	21	1136	31	1040
		6	0	1697	165	0	19			
	45 deg	1a	-1012	8389	137	-17	134	1136	167	5546
		1b	-63	3030	151	-1	43	1136	31	1040
		3	-232	6896	286	-4	102	1136	47	1560
		4	-48	3134	175	-1	43	1136	31	1040
	90 deg	1a	0	**15497**	129	0	**255**	1136	167	5546
		1b	0	4383	149	0	66	1136	31	1040
		3	0	11098	279	0	174	1136	47	1560
		4	0	4480	174	0	66	1136	31	1040
	-45 deg	1a	1012	8389	137	17	134	1136	167	5546
		1b	63	3030	151	1	43	1136	31	1040
		3	232	6896	286	4	102	1136	47	1560
		4	48	3134	175	1	43	1136	31	1040
Perm load 0,9	0 deg	1a	0	1201	112	0	14	852	167	5546
		1b	0	1353	116	0	16	852	31	1040
		3	0	2486	254	0	28	852	47	1560
		4	0	1482	140	0	17	852	31	1040
		6	0	**1197**	112	0	**14**			
	45 deg	1a	**-1196**	8135	101	**-20**	132	852	167	5546
		1b	-90	2686	115	-2	39	852	31	1040
		3	-275	6607	251	-5	99	852	47	1560
		4	-65	2811	140	-1	40	852	31	1040
	90 deg	1a	0	15311	**95**	0	254	852	167	5546
		1b	0	4055	112	0	62	852	31	1040
		3	0	10833	243	0	172	852	47	1560
		4	0	4166	138	0	63	852	31	1040
	-45 deg	1a	**1196**	8135	101	**20**	132	852	167	5546
		1b	90	2686	115	2	39	852	31	1040
		3	275	6607	251	5	99	852	47	1560
		4	65	2811	140	1	40	852	31	1040

			Totaal										
regel		Loadcase	M_{langs}	M_{dwars}	N	V_{langs}	V_{dwars}	Totaal moment					
1	Perm load 1,2	0 deg	1a	5546	1538	1284	167	18	5755,39	1	x		x
2	Perm load 1,2	0 deg	1b	1040	1703	1288	31	20	1995,482	2			
3	Perm load 1,2	0 deg	3	1560	2784	1425	47	31	3190,959	3		x	
4	Perm load 1,2	0 deg	4	1040	1809	1312	31	21	2086,65	4			
5	Perm load 1,2	0 deg	6							5			
6										6			
7	Perm load 1,2	45 deg	1a	4934	12310	1273	135	252	13262,3	7			
8	Perm load 1,2	45 deg	1b	798	3766	1287	23	65	3849,244	8			
9	Perm load 1,2	45 deg	3	1335	7999	1422	37	135	8109,168	9			
10	Perm load 1,2	45 deg	4	783	3870	1311	23	65	3948,064	10			
11										11			
12	Perm load 1,2	90 deg	1a	0	21043	1265	0	422	21042,55	12	x		x
13	Perm load 1,2	90 deg	1b	0	5423	1285	0	97	5422,83	13			
14	Perm load 1,2	90 deg	3	0	12658	1415	0	221	12657,65	14			
15	Perm load 1,2	90 deg	4 Construc	0	5519	1310	0	97	5519,454	15			
16										16			
17	Perm load 1,2	-45 deg	1a	4934	12310	1273	135	252	13262,3	17			
18	Perm load 1,2	-45 deg	1b	798	3766	1287	23	65	3849,244	18			
19	Perm load 1,2	-45 deg	3	1335	7999	1422	37	135	8109,168	19			
20	Perm load 1,2	-45 deg	4	783	3870	1311	23	65	3948,064	20			
21										21			
22	Perm load 0,9	0 deg	1a	5546	1201	964	167	14	5674,528	22	x		x
23	Perm load 0,9	0 deg	1b	1040	1353	968	31	16	1706,653	23			
24	Perm load 0,9	0 deg	3	1560	2486	1106	47	28	2934,838	24			
25	Perm load 0,9	0 deg	4	1040	1482	992	31	17	1810,662	25			
26	Perm load 0,9	0 deg	6							26			
27										27			
28	Perm load 0,9	45 deg	1a	5117	12056	953	138	250	13097,3	28			
29	Perm load 0,9	45 deg	1b	826	3421	967	24	61	3519,639	29			
30	Perm load 0,9	45 deg	3	1378	7710	1103	38	132	7832,205	30			
31	Perm load 0,9	45 deg	4 Construc	800	3546	992	23	62	3635,423	31			
32										32			
33	Perm load 0,9	90 deg	1a	0	20857	947	0	421	20857,35	33			
34	Perm load 0,9	90 deg	1b	0	5095	964	0	94	5094,696	34			
35	Perm load 0,9	90 deg	3	0	12393	1095	0	219	12392,83	35			
36	Perm load 0,9	90 deg	4	0	5206	990	0	94	5206,093	36			
37										37			
38	Perm load 0,9	-45 deg	1a	5117	12056	953	138	250	13097,3	38			
39	Perm load 0,9	-45 deg	1b	826	3421	967	24	61	3519,639	39			
40	Perm load 0,9	-45 deg	3	1378	7710	1103	38	132	7832,205	40			
41	Perm load 0,9	-45 deg	4	800	3546	992	23	62	3635,423	41			
		Max		5546	21043	1425	167	422	21043				

samenvatting

	Mast	Bijlage	Wind	Loadcase	M_{langs}	M_{dwars}	N	V_{langs}	V_{dwars}
1	W2H400+122-AE1	Perm load	0 deg	1a	5546	1538	1284	167	18
3	W2H400+122-AE1	Perm load	0 deg	3	1560	2784	1425	47	31
12	W2H400+122-AE1	Perm load	90 deg	1a	0	21043	1265	0	422
22	W2H400+122-AE1	Perm load	0 deg	1a	5546	1201	964	167	14

W2H400+15 TOWER (rev 6.0, date: 05 Appendix AE1
Loadcases for tower strength (special limit state)
Loadcase Attachment point

		AHEAD			**BACK**		
		[N]	[N]	[N]	[N]	[N]	[N]
1a	380C1F1	20694	66121	134510	20694	66121	-134510
Wind, 10	380C1F2	20703	65825	134370	20703	65825	-134370
Permanen	380C1F3	20714	65466	134219	20714	65466	-134219
Wind angl	GW / opgv	2697	8891	17777	2697	8891	-17777
	Comp. gl	5611	17909	36530	5611	17909	-36530
1b	380C1F1	21295	72760	153793	21295	72760	-153793
Wind, -20	380C1F2	21297	72691	153798	21297	72691	-153798
Permanen	380C1F3	21298	72606	153805	21298	72606	-153805
Wind angl	GW / opgv	2775	9466	19904	2775	9466	-19904
	Comp. gl	5747	19311	40835	5747	19311	-40835
3	380C1F1	24214	77879	160751	24214	77879	-160751
Wind+ice,	380C1F2	24220	77649	160684	24220	77649	-160684
Permanen	380C1F3	24227	77370	160615	24227	77370	-160615
Wind angl	GW / opgv	4559	14266	28555	4559	14266	-28555
	Comp. gl	9341	28340	57819	9341	28340	-57819
4	380C1F1	23664	71834	151805	23664	71834	-151805
Construction/mainte		23665	71766	151814	23665	71766	-151814
Permanen	380C1F3	23666	71684	151826	23666	71684	-151826
Wind angl	GW / opgv	3430	10315	21723	3430	10315	-21723
	Comp. gl	7060	21084	44637	7060	21084	-44637
6	380C1F1	23267	68714	147358	23267	68714	-147358
Permanen	380C1F2	23267	68714	147358	23267	68714	-147358
Permanen	380C1F3	23267	68714	147358	23267	68714	-147358
	GW / opgv	3042	9033	19370	3042	9033	-19370
	Comp. gl	6308	18706	40115	6308	18706	-40115
1a	380C1F1	20734	64695	133966	19666	92787	-162944
Wind, 10	380C1F2	20738	64524	133925	19762	89992	-159407
Permanen	380C1F3	20743	64317	133884	19885	86611	-155207
Wind angl	GW / opgv	2707	8607	17614	2513	14276	-24233
	Comp. gl	5620	17545	36396	5352	24735	-43768
1b	380C1F1	21300	72417	153832	21112	78006	-156205
Wind, -20	380C1F2	21301	72375	153840	21136	77466	-155803
Permanen	380C1F3	21301	72322	153851	21164	76819	-155352
Wind angl	GW / opgv	2776	9402	19904	2735	10520	-20599
	Comp. gl	5748	19223	40846	5704	20650	-41431
3	380C1F1	24241	76762	160515	23371	97906	-178997
Wind+ice,	380C1F2	24244	76626	160503	23462	95778	-176546
Permanen	380C1F3	24247	76460	160494	23574	93222	-173684
Wind angl	GW / opgv	4573	13851	28368	4273	21883	-36843
	Comp. gl	9355	27798	57677	8949	38072	-67021
4	380C1F1	23667	71499	151862	23529	76746	-153497
Construction/mainte		23668	71457	151872	23547	76251	-153190
Permanen	380C1F3	23668	71405	151885	23568	75654	-152849
Wind angl	GW / opgv	3431	10254	21729	3403	11242	-22145
	Comp. gl	7061	20999	44655	7031	22294	-44957
1a	380C1F1	19765	89925	159324	19765	89925	-159324
Wind, 10	380C1F2	19856	87384	156158	19856	87384	-156158
Permanen	380C1F3	19971	84315	152416	19971	84315	-152416
Wind angl	GW / opgv	2527	13717	23480	2527	13717	-23480
	Comp. gl	5377	23997	42834	5377	23997	-42834
1b	380C1F1	21137	77454	155793	21137	77454	-155793
Wind, -20	380C1F2	21158	76967	155451	21158	76967	-155451
Permanen	380C1F3	21182	76382	155070	21182	76382	-155070
Wind angl	GW / opgv	2740	10406	20491	2740	10406	-20491
	Comp. gl	5709	20509	41328	5709	20509	-41328
3	380C1F1	23464	95728	176488	23464	95728	-176488
Wind+ice,	380C1F2	23548	93804	174327	23548	93804	-174327
Permanen	380C1F3	23650	91496	171814	23650	91496	-171814
Wind angl	GW / opgv	4297	21093	35855	4297	21093	-35855
	Comp. gl	8988	37030	65807	8988	37030	-65807
4	380C1F1	23547	76239	153183	23547	76239	-153183
Construction/mainte		23563	75790	152924	23563	75790	-152924
Permanen	380C1F3	23581	75250	152638	23581	75250	-152638
Wind angl	GW / opgv	3406	11144	22073	3406	11144	-22073
	Comp. gl	7035	22171	44891	7035	22171	-44891
1a	380C1F1	19666	92787	162944	20734	64695	-133966
Wind, 10	380C1F2	19762	89992	159407	20738	64524	-133925
Permanen	380C1F3	19885	86611	155207	20743	64317	-133884
Wind angl	GW / opgv	2513	14276	24233	2707	8607	-17614
	Comp. gl	5352	24735	43768	5620	17545	-36396
1b	380C1F1	21112	78006	156205	21300	72417	-153832
Wind, -20	380C1F2	21136	77466	155803	21301	72375	-153840
Permanen	380C1F3	21164	76819	155352	21301	72322	-153851
Wind angl	GW / opgv	2735	10520	20599	2776	9402	-19904
	Comp. gl	5704	20650	41431	5748	19223	-40846
3	380C1F1	23371	97906	178997	24241	76762	-160515
Wind+ice,	380C1F2	23462	95778	176546	24244	76626	-160503
Permanen	380C1F3	23574	93222	173684	24247	76460	-160494
Wind angl	GW / opgv	4273	21883	36843	4573	13851	-28368
0	Comp. gl	8949	38072	67021	9355	27798	-57677
4	380C1F1	23529	76746	153497	23667	71499	-151862
Construction/mainte		23547	76251	153190	23668	71457	-151872
Permanen	380C1F3	23568	75654	152849	23668	71405	-151885
Wind angl	GW / opgv	3403	11242	22145	3431	10254	-21729
	Comp. gl	7031	22294	44957	7061	20999	-44655
1a	380C1F1	15625	53388	107205	15625	53388	-107205
Wind, 10	380C1F2	15637	53047	106970	15637	53047	-106970
Permanen	380C1F3	15651	52637	106709	15651	52637	-106709
Wind angl	GW / opgv	2031	7218	14188	2031	7218	-14188
	Comp. gl	4234	14376	28955	4234	14376	-28955
1b	380C1F1	16211	59038	124368	16211	59038	-124368
Wind, -20	380C1F2	16212	58964	124361	16212	58964	-124361
Permanen	380C1F3	16214	58874	124357	16214	58874	-124357
Wind angl	GW / opgv	2107	7617	15937	2107	7617	-15937
3	380C1F1	19171	65274	133721	19171	65274	-133721
Wind+ice,	380C1F2	19180	65020	133602	19180	65020	-133602
Permanen	380C1F3	19189	64713	133474	19189	64713	-133474
Wind angl	GW / opgv	3906	12796	25403	3906	12796	-25403
	Comp. gl	7992	25254	51200	7992	25254	-51200
4	380C1F1	18642	59191	124693	18642	59191	-124693
Construction/mainte		18643	59120	124694	18643	59120	-124694
Permanen	380C1F3	18644	59034	124699	18644	59034	-124699
Wind angl	GW / opgv	2774	8667	18188	2774	8667	-18188

	Comp. gl	5701	17683	37343	5701	17683	-37343
6	380C1F1	15721	49434	106011	15721	49434	-106011
Permanen	380C1F2	15721	49434	106011	15721	49434	-106011
Permanen	380C1F3	15721	49434	106011	15721	49434	-106011
	GW / opg	2052	6441	13813	2052	6441	-13813
	Comp. gl	4257	13367	28666	4257	13367	-28666
1a	380C1F1	15679	51766	106240	14527	84525	-145232
Wind, 10	380C1F2	15684	51575	106156	14612	81352	-140885
Permanen	380C1F3	15690	51345	106067	14725	77481	-135633
Wind ang	GW / opg	2043	6888	13926	1851	13386	-22325
	Comp. gl	4247	13964	28717	3954	22362	-38681
1b	380C1F1	16217	58674	124360	15961	65091	-128511
Wind, -20	380C1F2	16218	58629	124364	15992	64448	-127886
Permanen	380C1F3	16219	58574	124370	16029	63680	-127176
Wind ang	GW / opg	2109	7547	15925	2055	8856	-17029
	Comp. gl	4366	15418	32686	4306	17050	-33713
3	380C1F1	19207	64051	133258	18205	88309	-158423
Wind+ice,	380C1F2	19211	63905	133224	18298	85877	-155316
Permanen	380C1F3	19215	63727	133189	18416	82940	-151638
Wind ang	GW / opg	3922	12349	25147	3616	21037	-35030
	Comp. gl	8009	24678	50985	7571	35881	-62325
4	380C1F1	18646	58842	124720	18467	64649	-127555
Construction/mainte		18647	58799	124726	18490	64082	-127095
Permanen	380C1F3	18647	58745	124736	18516	63402	-126576
Wind ang	GW / opg	2775	8603	18190	2740	9693	-18824
	Comp. gl	5702	17595	37355	5664	19000	-37892
1a	380C1F1	14614	81277	140782	14614	81277	-140782
Wind, 10	380C1F2	14698	78369	136831	14698	78369	-136831
Permanen	380C1F3	14808	74830	132079	14808	74830	-132079
Wind ang	GW / opg	1862	12773	21455	1862	12773	-21455
	Comp. gl	3978	21520	37523	3978	21520	-37523
1b	380C1F1	15993	64433	127872	15993	64433	-127872
Wind, -20	380C1F2	16021	63854	127334	16021	63854	-127334
Permanen	380C1F3	16054	63163	126724	16054	63163	-126724
Wind ang	GW / opg	2061	8718	16872	2061	8718	-16872
	Comp. gl	4314	16883	33553	4314	16883	-33553
3	380C1F1	18300	85819	155243	18300	85819	-155243
Wind+ice,	380C1F2	18388	83610	152470	18388	83610	-152470
Permanen	380C1F3	18498	80949	149199	18498	80949	-149199
Wind ang	GW / opg	3637	20200	33939	3637	20200	-33939
	Comp. gl	7610	34753	60925	7610	34753	-60925
4	380C1F1	18491	64068	127084	18491	64068	-127084
Construction/mainte		18510	63557	126691	18510	63557	-126691
Permanen	380C1F3	18534	62944	126249	18534	62944	-126249
Wind ang	GW / opg	2745	9582	18724	2745	9582	-18724
	Comp. gl	5669	18862	37795	5669	18862	-37795
1a	380C1F1	14527	84525	145232	15679	51766	-106240
Wind, 10	380C1F2	14612	81352	140885	15684	51575	-106156
Permanen	380C1F3	14725	77481	135633	15690	51345	-106067
Wind ang	GW / opg	1851	13386	22325	2043	6888	-13926
	Comp. gl	3954	22362	38681	4247	13964	-28717
1b	380C1F1	15961	65091	128511	16217	58674	-124360
Wind, -20	380C1F2	15992	64448	127886	16218	58629	-124364
Permanen	380C1F3	16029	63680	127176	16219	58574	-124370
Wind ang	GW / opg	2055	8856	17029	2109	7547	-15925
	Comp. gl	4306	17050	33713	4366	15418	-32686
3	380C1F1	18205	88309	158423	19207	64051	-133258
Wind+ice,	380C1F2	18298	85877	155316	19211	63905	-133224
Permanen	380C1F3	18416	82940	151638	19215	63727	-133189
Wind ang	GW / opg	3616	21037	35030	3922	12349	-25147
0 Comp. gl		7571	35881	62325	8009	24678	-50985
4	380C1F1	18467	64649	127555	18646	58842	-124720
Construction/mainte		18490	64082	127095	18647	58799	-124726
Permanen	380C1F3	18516	63402	126576	18647	58745	-124736
Wind ang	GW / opg	2740	9693	18824	2775	8603	-18190
	Comp. gl	5664	19000	37892	5702	17595	-37355
1a	380C1F1	20694	66121	134510	0	0	0
Wind, 10	380C1F2	20703	65825	134370	0	0	0
Permanen	380C1F3	20714	65466	134219	0	0	0
Wind ang	GW / opg	2697	8891	17777	0	0	0
	Comp. gl	5611	17909	36530	0	0	0
1b	380C1F1	21295	72760	153793	0	0	0
Wind, -20	380C1F2	21297	72691	153798	0	0	0
Permanen	380C1F3	21298	72606	153805	0	0	0
Wind ang	GW / opg	2775	9466	19904	0	0	0
	Comp. gl	5747	19311	40835	0	0	0
3	380C1F1	24214	77879	160751	0	0	0
Wind+ice,	380C1F2	24220	77649	160684	0	0	0
Permanen	380C1F3	24227	77370	160615	0	0	0
Wind ang	GW / opg	4559	14266	28555	0	0	0
	Comp. gl	9341	28340	57819	0	0	0
4	380C1F1	23664	71834	151805	0	0	0
Construction/mainte		23665	71766	151814	0	0	0
Permanen	380C1F3	23666	71684	151826	0	0	0
Wind ang	GW / opg	3430	10315	21723	0	0	0
	Comp. gl	7060	21084	44637	0	0	0
6	380C1F1	23267	68714	147358	0	0	0
Permanen	380C1F2	23267	68714	147358	0	0	0
Permanen	380C1F3	23267	68714	147358	0	0	0
	GW / opg	3042	9033	19370	0	0	0
	Comp. gl	6308	18706	40115	0	0	0
1a	380C1F1	20734	64695	133966	0	0	0
Wind, 10	380C1F2	20738	64524	133925	0	0	0
Permanen	380C1F3	20743	64317	133884	0	0	0
Wind ang	GW / opg	2707	8607	17614	0	0	0
	Comp. gl	5620	17545	36396	0	0	0
1b	380C1F1	21300	72417	153832	0	0	0
Wind, -20	380C1F2	21301	72375	153840	0	0	0
Permanen	380C1F3	21301	72332	153851	0	0	0
Wind ang	GW / opg	2776	9402	19904	0	0	0
	Comp. gl	5748	19223	40846	0	0	0
3	380C1F1	24241	76762	160515	0	0	0
Wind+ice,	380C1F2	24244	76626	160503	0	0	0
Permanen	380C1F3	24247	76460	160494	0	0	0
Wind ang	GW / opg	4573	13851	28368	0	0	0
	Comp. gl	9355	27798	57677	0	0	0
4	380C1F1	23667	71499	151862	0	0	0
Construction/mainte		23668	71457	151872	0	0	0
Permanen	380C1F3	23668	71405	151885	0	0	0
Wind ang	GW / opg	3431	10254	21729	0	0	0
	Comp. gl	7061	20999	44655	0	0	0
1a	380C1F1	19765	89925	159324	0	0	0
Wind, 10	380C1F2	19856	87384	156158	0	0	0
Permane	380C1F3	19971	84315	152416	0	0	0
Wind ang	GW / opg	2527	13717	23480	0	0	0
	Comp. gl	5377	23997	42834	0	0	0
1b	380C1F1	21137	77454	155793	0	0	0
Wind, -2(	380C1F2	21158	76967	155451	0	0	0
Permane	380C1F3	21182	76382	155070	0	0	0
Wind ang	GW / opg	2740	10406	20491	0	0	0
	Comp. gl	5709	20509	41328	0	0	0
3	380C1F1	23464	95728	176488	0	0	0
Wind+ice	380C1F2	23548	93804	174327	0	0	0
Permane	380C1F3	23650	91496	171814	0	0	0
Wind ang	GW / opg	4297	21093	35855	0	0	0
	Comp. gl	8988	37030	65807	0	0	0
4	380C1F1	23547	76239	153183	0	0	0
Construction/main		23563	75790	152924	0	0	0
Permane	380C1F3	23581	75250	152638	0	0	0
Wind ang	GW / opg	3406	11144	22073	0	0	0
	Comp. gl	7035	22171	44891	0	0	0
1a	380C1F1	19666	92787	162944	0	0	0
Wind, 10	380C1F2	19762	89992	159407	0	0	0
Permane	380C1F3	19885	86611	155207	0	0	0
Wind ang	GW / opg	2513	14276	24233	0	0	0
	Comp. gl	5352	24735	43768	0	0	0
1b	380C1F1	21112	78006	156205	0	0	0
Wind, -2(	380C1F2	21136	77466	155803	0	0	0
Permane	380C1F3	21164	76819	155352	0	0	0
Wind ang	GW / opg	2735	10520	20599	0	0	0
	Comp. gl	5704	20650	41431	0	0	0
3	380C1F1	23371	97906	178997	0	0	0
Wind+ice	380C1F2	23462	95778	176546	0	0	0
Permane	380C1F3	23574	93222	173684	0	0	0
Wind ang	GW / opg	4273	21883	36843	0	0	0
0 Comp. gl		8949	38072	67021	0	0	0
4	380C1F1	23529	76746	153497	0	0	0
Construction/main		23547	76251	153190	0	0	0
Permane	380C1F3	23568	75654	152849	0	0	0
Wind ang	GW / opg	3403	11242	22145	0	0	0
	Comp. gl	7031	22294	44957	0	0	0
1a	380C1F1	15625	53388	107205	0	0	0
Wind, 10	380C1F2	15637	53047	106970	0	0	0
Permane	380C1F3	15651	52637	106709	0	0	0

Wind ang	GW / opç	2031	7218	14188	0	0	0
	Comp. gl	4234	14376	28955	0	0	0
1b	380C1F116211		59038	124368	0	0	0
Wind, -2(	380C1F216212		58964	124361	0	0	0
Permane	380C1F316214		58874	124357	0	0	0
Wind ang	GW / opç	2107	7617	15937	0	0	0
	Comp. gl	4364	15511	32686	0	0	0
3	380C1F119171		65274	133721	0	0	0
Wind+ice	380C1F219180		65020	133602	0	0	0
Permane	380C1F319189		64713	133474	0	0	0
Wind ang	GW / opç	3906	12796	25403	0	0	0
	Comp. gl	7992	25254	51200	0	0	0
4	380C1F118642		59191	124693	0	0	0
Construction/main		18643	59120	124694	0	0	0
Permane	380C1F318644		59034	124699	0	0	0
Wind ang	GW / opç	2774	8667	18188	0	0	0
	Comp. gl	5701	17683	37343	0	0	0
6	380C1F115721		49434	106011	0	0	0
Permane	380C1F215721		49434	106011	0	0	0
Permane	380C1F315721		49434	106011	0	0	0
	GW / opç	2052	6441	13813	0	0	0
	Comp. gl	4257	13367	28666	0	0	0
1a	380C1F115679		51766	106240	0	0	0
Wind, 10	380C1F215684		51575	106156	0	0	0
Permane	380C1F315690		51345	106067	0	0	0
Wind ang	GW / opç	2043	6888	13926	0	0	0
	Comp. gl	4247	13964	28717	0	0	0
1b	380C1F116217		58674	124360	0	0	0
Wind, -2(	380C1F216218		58629	124364	0	0	0
Permane	380C1F316219		58574	124370	0	0	0
Wind ang	GW / opç	2109	7547	15925	0	0	0
	Comp. gl	4366	15418	32686	0	0	0
3	380C1F119207		64051	133258	0	0	0
Wind+ice	380C1F219211		63905	133224	0	0	0
Permane	380C1F319215		63727	133189	0	0	0
Wind ang	GW / opç	3922	12349	25147	0	0	0
	Comp. gl	8009	24678	50985	0	0	0
4	380C1F118646		58842	124720	0	0	0
Construction/main		18647	58799	124726	0	0	0
Permane	380C1F318647		58745	124736	0	0	0
Wind ang	GW / opç	2775	8603	18190	0	0	0
	Comp. gl	5702	17595	37355	0	0	0
1a	380C1F114614		81277	140782	0	0	0
Wind, 10	380C1F214698		78369	136831	0	0	0
Permane	380C1F314808		74830	132079	0	0	0
Wind ang	GW / opç	1862	12773	21455	0	0	0
	Comp. gl	3978	21520	37523	0	0	0
1b	380C1F115993		64433	127872	0	0	0
Wind, -2(	380C1F216021		63854	127334	0	0	0
Permane	380C1F316054		63163	126724	0	0	0
Wind ang	GW / opç	2061	8718	16872	0	0	0
	Comp. gl	4314	16883	33553	0	0	0
3	380C1F118300		85819	155243	0	0	0
Wind+ice	380C1F218388		83610	152470	0	0	0
Permane	380C1F318498		80949	149199	0	0	0
Wind ang	GW / opç	3637	20200	33939	0	0	0
	Comp. gl	7610	34753	60925	0	0	0
4	380C1F118491		64068	127084	0	0	0
Construction/main		18510	63557	126691	0	0	0
Permane	380C1F318534		62944	126249	0	0	0
Wind ang	GW / opç	2745	9582	18724	0	0	0
	Comp. gl	5669	18862	37795	0	0	0
1a	380C1F114527		84525	145232	0	0	0
Wind, 10	380C1F214612		81352	140885	0	0	0
Permane	380C1F314725		77481	135633	0	0	0
Wind ang	GW / opç	1851	13386	22325	0	0	0
	Comp. gl	3954	22362	38681	0	0	0
1b	380C1F115961		65091	128511	0	0	0
Wind, -2(	380C1F215992		64448	127886	0	0	0
Permane	380C1F316029		63680	127176	0	0	0
Wind ang	GW / opç	2055	8856	17029	0	0	0
	Comp. gl	4306	17050	33713	0	0	0
3	380C1F118205		88309	158423	0	0	0
Wind+ice	380C1F218298		85877	155316	0	0	0
Permane	380C1F318416		82940	151638	0	0	0
Wind ang	GW / opç	3616	21037	35030	0	0	0
0 Comp. gl		7571	35881	62325	0	0	0
4	380C1F118467		64649	127555	0	0	0
Construction/main		18490	64082	127095	0	0	0
Permane	380C1F318516		63402	126576	0	0	0
Wind ang	GW / opç	2740	9693	18824	0	0	0
	Comp. gl	5664	19000	37892	0	0	0

W2H400+1 | 22-AE2

Hoogte mast	Ber & bijlage		72 m			
Hoogte onderste stroomdraad (F3)			42 m			
			Hoogte		Excentriciteit ophanging t.o.v. hart mast	SLS
Bliksemdraad = GW / (H$_{mast}$ -	0,57	m =	71,43 m		0,76 m	
1e traverse - 380C1F1 F2 +	10	m =	62 m		0 m	
2e traverse - 380C1F2 F3 +	10	m =	52 m		0 m	
3e traverse - 380C1F3			42 m		0 m	
Passieve lijn = Comp C F3 -	7,5	m =	34,5 m		2,075 m	

Uit mast			Uit lijnen				
ULS (incl bel factoren)			SLS				
N	V	M	Nmin	Nmax	Vmax	Mlangs;ma	Mdwars;max
[kN]	[kN]	[kNm]	[kN]	[kN]	[kN]	[kNm]	[kNm]
1136	167	5546	109	210	719	8656	36860

		Belastingen uit lijnen						Belasting uit mast		
			M_{langs}	M_{dwars}	N	V_{langs}	V_{dwars}	N	V	M
SLS	0 deg	1a	0	**20599**	118	0	**400**	947	111	3697
		1b	0	22174	122	0	431	947	111	3697
		3	0	32249	**210**	0	631	947	111	3697
		4	0	21923	137	0	427	947	111	3697
	45 deg	1a	**-8656**	27045	113	**-165**	523	947	111	3697
		1b	-351	22867	121	-7	444	947	111	3697
		3	-1721	34675	209	-32	677	947	111	3697
		4	-233	22564	136	-4	439	947	111	3697
	90 deg	1a	0	32821	**109**	0	633	947	111	3697
		1b	0	23500	121	0	456	947	111	3697
		3	0	**36860**	207	0	**719**	947	111	3697
		4	0	23156	136	0	450	947	111	3697
	-45 deg	1a	**8656**	27045	113	**165**	523	947	111	3697
		1b	351	22867	121	7	444	947	111	3697
		3	1721	34675	209	32	677	947	111	3697
		4	233	22564	136	4	439	947	111	3697

regel			Loadcase	Totaal M_{langs}	M_{dwars}	N	V_{langs}	V_{dwars}	Totaal moment		M langs ma	M dwars ma	N max	V langs max	V dwars ma	M tot max	N min
1	Perm load 1,2	0 deg	1a	3697	24296	1064	111	511	24576,09	1							
2	Perm load 1,2	0 deg	1b	3697	25871	1068	111	542	26133,79	2							
3	Perm load 1,2	0 deg	3	3697	35947	1157	111	742	36136,43	3			x				
4	Perm load 1,2	0 deg	4	3697	25620	1083	111	538	25885,55	4							
5										5							
6	Perm load 1,2	45 deg	1a	12353	30742	1060	276	634	33131,35	6	x			x			
7	Perm load 1,2	45 deg	1b	4049	26564	1068	118	556	26871,21	7							
8	Perm load 1,2	45 deg	3	5418	38372	1155	144	789	38752,7	8							
9	Perm load 1,2	45 deg	4	3930	26261	1083	116	550	26553,64	9							
10										10							
11	Perm load 1,2	90 deg	1a	3697	36518	1056	111	745	36704,63	11							x
12	Perm load 1,2	90 deg	1b	3697	27197	1068	111	568	27447,41	12							
13	Perm load 1,2	90 deg	3	3697	40557	1154	111	830	40725,27	13		x			x	x	
14	Perm load 1,2	90 deg	4 Construc	3697	26853	1083	111	561	27106,78	14							
15										15							
16	Perm load 1,2	-45 deg	1a	11270	30742	1060	276	634	32743	16				x			
17	Perm load 1,2	-45 deg	1b	2966	26564	1068	118	556	26729,49	17							
18	Perm load 1,2	-45 deg	3	4335	38372	1155	144	789	38616,17	18							
19	Perm load 1,2	-45 deg	4	2847	26261	1083	116	550	26415,09	19							
				12353	40557	1157	276	830	40725								
						1056											

samenvatting

	Mast	Bijlage	Wind	Loadcase	M_{langs}	M_{dwars}	N	V_{langs}	V_{dwars}
3	W2H400+122-AE2	Perm load	0 deg	3	3697	35947	1157	111	742
6	W2H400+122-AE2	Perm load	45 deg	1a	12353	30742	1060	276	634
11	W2H400+122-AE2	Perm load	90 deg	1a	3697	36518	1056	111	745
13	W2H400+122-AE2	Perm load	90 deg	3	3697	40557	1154	111	830
16	W2H400+122-AE2	Perm load	-45 deg	1a	11270	30742	1060	276	634
	W2H400+122-AE2	#N/B	#N/B	#N/B	#N/B	#N/B	#N/B	#N/B	#N/B

W2H300+10 TOWER
Loadcases for tower deflic Appendix AE2
Loadcase according to 50341-3-15

		AHEAD			BACK			Totaal Vert	Dwars	Langs	Belastingen op mastvoet, per lijn M_{langs}	M_{dwars}	N	V_{langs}	V_{dwars}
	Attachme	[N]	[N]	[N]	[N]	[N]	[N]	[kN]	[kN]	[kN]					
1a	380C1F1	17271	59150	117506	17271	59150	-117506	34,542	118,3	0	0	7334,6	34,542	0	118,3
Wind, 10	380C1F2	17288	58691	117159	17288	58691	-117159	34,576	117,382	0	0	6103,864	34,576	0	117,382
Permane	380C1F3	17308	58142	116771	17308	58142	-116771	34,616	116,284	0	0	4883,928	34,616	0	116,284
Wind ang	GW / op	2243	8077	15667	2243	8077	-15667	4,486	16,154	0	0	1157,29	4,486	0	16,154
	Comp. gl	4682	15941	31780	4682	15941	-31780	9,364	31,882	0	0	1119,359	9,364	0	31,882
1b	380C1F1	17917	63577	134474	17917	63577	-134474	35,834	127,154	0	0	7883,548	35,834	0	127,154
Wind, -2(	380C1F2	17918	63519	134476	17918	63519	-134476	35,836	127,038	0	0	6605,976	35,836	0	127,038
Permane	380C1F3	17919	63447	134481	17919	63447	-134481	35,838	126,894	0	0	5329,548	35,838	0	126,894
Wind ang	GW / op	2332	8217	17291	2332	8217	-17291	4,664	16,434	0	0	1177,425	4,664	0	16,434
	Comp. gl	4828	16769	35481	4828	16769	-35481	9,656	33,538	0	0	1177,097	9,656	0	33,538
3	380C1F1	27292	84702	176425	27292	84702	-176425	54,584	169,404	0	0	10503,05	54,584	0	169,404
Wind+ice	380C1F2	27296	84526	176403	27296	84526	-176403	54,592	169,052	0	0	8790,704	54,592	0	169,052
Permane	380C1F3	27300	84311	176385	27300	84311	-176385	54,6	168,622	0	0	7082,124	54,6	0	168,622
Wind ang	GW / op	7709	20658	42601	7709	20658	-42601	15,418	41,316	0	0	2962,92	15,418	0	41,316
	Comp. gl	15602	41245	85983	15602	41245	-85983	31,204	82,49	0	0	2910,653	31,204	0	82,49
4	380C1F1	19851	62128	131366	19851	62128	-131366	39,702	124,256	0	0	7703,872	39,702	0	124,256
Construc	380C1F2	19851	62072	131372	19851	62072	-131372	39,702	124,144	0	0	6455,488	39,702	0	124,144
Permane	380C1F3	19852	62002	131382	19852	62002	-131382	39,704	124,004	0	0	5208,168	39,704	0	124,004
Wind ang	GW / op	2876	8895	18744	2876	8895	-18744	5,752	17,79	0	0	1275,111	5,752	0	17,79
	Comp. gl	5920	18197	38543	5920	18197	-38543	11,84	36,394	0	0	1280,161	11,84	0	36,394
1a	380C1F1	17347	56974	116064	15910	100156	-168580	33,257	157,13	-52,516	-3255,99	9742,06	33,257	-52,516	157,13
Wind, 10	380C1F2	17355	56720	115936	16005	96083	-162996	33,36	152,803	-47,06	-2447,12	7945,756	33,36	-47,06	152,803
Permane	380C1F3	17364	56414	115796	16131	91086	-156191	33,495	147,5	-40,395	-1696,59	6195	33,495	-40,395	147,5
Wind ang	GW / op	2259	7632	15284	2029	16099	-26341	4,288	23,731	-11,057	-789,802	1698,364	4,288	-11,057	23,731
	Comp. gl	4701	15387	31423	4332	26499	-44934	9,033	41,886	-13,511	-466,13	1463,81	9,033	-13,511	41,886
1b	380C1F1	17921	63289	134501	17758	68041	-136682	35,679	131,33	-2,181	-135,222	8142,46	35,679	-2,181	131,33
Wind, -2(	380C1F2	17922	63253	134507	17779	67579	-136320	35,701	130,832	-1,813	-94,276	6803,264	35,701	-1,813	130,832
Permane	380C1F3	17922	63209	134516	17803	67025	-135914	35,725	130,234	-1,398	-58,716	5469,828	35,725	-1,398	130,234
Wind ang	GW / op	2333	8163	17290	2297	9117	-17916	4,63	17,28	-0,626	-44,7152	1237,829	4,63	-0,626	17,28
	Comp. gl	4829	16695	35488	4791	17907	-36024	9,62	34,602	-0,536	-18,492	1213,731	9,62	-0,536	34,602
3	380C1F1	27309	83840	176377	26719	99175	-186877	54,028	183,015	-10,5	-651	11346,93	54,028	-10,5	183,015
Wind+ice	380C1F2	27310	83734	176382	26787	97646	-185358	54,097	181,38	-8,976	-466,752	9431,76	54,097	-8,976	181,38
Permane	380C1F3	27312	83603	176392	26869	95815	-183614	54,181	179,418	-7,222	-303,324	7535,556	54,181	-7,222	179,418
Wind ang	GW / op	7714	20382	42597	7541	25142	-45511	15,255	45,524	-2,914	-208,147	3263,373	15,255	-2,914	45,524
	Comp. gl	15607	40866	86022	15409	47039	-88683	31,016	87,905	-2,661	-91,8045	3097,081	31,016	-2,661	87,905
4	380C1F1	19854	61848	131410	19735	66290	-132922	39,589	128,138	-1,512	-93,744	7944,556	39,589	-1,512	128,138
Construc	380C1F2	19854	61813	131417	19750	65867	-132646	39,604	127,68	-1,229	-63,908	6639,36	39,604	-1,229	127,68
Permane	380C1F3	19854	61769	131428	19768	65360	-132339	39,622	127,129	-0,911	-38,262	5339,418	39,622	-0,911	127,129
Wind ang	GW / op	2876	8844	18749	2852	9681	-19126	5,728	18,525	-0,377	-26,9291	1327,594	5,728	-0,377	18,525
	Comp. gl	5920	18126	38557	5894	19220	-38841	11,814	37,346	-0,284	-9,798	1312,951	11,814	-0,284	37,346
1a	380C1F1	16007	95985	162863	16007	95985	-162863	32,014	191,97	0	0	11902,14	32,014	0	191,97
Wind, 10	380C1F2	16101	92234	157750	16101	92234	-157750	32,202	184,468	0	0	9592,336	32,202	0	184,468
Permane	380C1F3	16227	87645	151546	16227	87645	-151546	32,454	175,29	0	0	7362,18	32,454	0	175,29
Wind ang	GW / op	2041	15325	25253	2041	15325	-25253	4,082	30,65	0	0	2192,432	4,082	0	30,65
	Comp. gl	4358	25412	43435	4358	25412	-43435	8,716	50,824	0	0	1771,514	8,716	0	50,824
1b	380C1F1	17779	67568	136312	17779	67568	-136312	35,558	135,136	0	0	8378,432	35,558	0	135,136
Wind, -2(	380C1F2	17797	67151	136004	17797	67151	-136004	35,594	134,302	0	0	6983,704	35,594	0	134,302
Permane	380C1F3	17819	66651	135659	17819	66651	-135659	35,638	133,302	0	0	5598,684	35,638	0	133,302
Wind ang	GW / op	2301	9019	17820	2301	9019	-17820	4,602	18,038	0	0	1291,952	4,602	0	18,038
	Comp. gl	4796	17786	35932	4796	17786	-35932	9,592	35,572	0	0	1247,137	9,592	0	35,572
3	380C1F1	26789	97610	185323	26789	97610	-185323	53,578	195,22	0	0	12103,64	53,578	0	195,22
Wind+ice	380C1F2	26851	96232	184003	26851	96232	-184003	53,702	192,464	0	0	10008,13	53,702	0	192,464
Permane	380C1F3	26924	94580	182493	26924	94580	-182493	53,848	189,16	0	0	7944,72	53,848	0	189,16
Wind ang	GW / op	7561	24666	45077	7561	24666	-45077	15,122	49,332	0	0	3535,277	15,122	0	49,332
	Comp. gl	15433	46434	88235	15433	46434	-88235	30,866	92,868	0	0	3267,993	30,866	0	92,868
4	380C1F1	19750	65857	132639	19750	65857	-132639	39,5	131,714	0	0	8166,268	39,5	0	131,714
Construc	380C1F2	19764	65476	132406	19764	65476	-132406	39,528	130,952	0	0	6809,504	39,528	0	130,952
Permane	380C1F3	19779	65016	132148	19779	65016	-132148	39,558	130,032	0	0	5461,344	39,558	0	130,032
Wind ang	GW / op	2855	9598	19062	2855	9598	-19062	5,71	19,196	0	0	1375,51	5,71	0	19,196
	Comp. gl	5898	19116	38782	5898	19116	-38782	11,796	38,232	0	0	1343,481	11,796	0	38,232
1a	380C1F1	15910	100156	168580	17347	56974	-116064	33,257	157,13	52,516	3255,992	9742,06	33,257	52,516	157,13
Wind, 10	380C1F2	16005	96083	162996	17355	56720	-115936	33,36	152,803	47,06	2447,12	7945,756	33,36	47,06	152,803
Permane	380C1F3	16131	91086	156191	17364	56414	-115796	33,495	147,5	40,395	1696,59	6195	33,495	40,395	147,5
Wind ang	GW / op	2029	16099	26341	2259	7632	-15284	4,288	23,731	11,057	789,8015	1698,364	4,288	11,057	23,731
	Comp. gl	4332	26499	44934	4701	15387	-31423	9,033	41,886	13,511	466,1295	1463,81	9,033	13,511	41,886
1b	380C1F1	17758	68041	136682	17921	63289	-134501	35,679	131,33	2,181	135,222	8142,46	35,679	2,181	131,33
Wind, -2(	380C1F2	17779	67579	136320	17922	63253	-134507	35,701	130,832	1,813	94,276	6803,264	35,701	1,813	130,832
Permane	380C1F3	17803	67025	135914	17922	63209	-134516	35,725	130,234	1,398	58,716	5469,828	35,725	1,398	130,234
Wind ang	GW / op	2297	9117	17916	2333	8163	-17290	4,63	17,28	0,626	44,71518	1237,829	4,63	0,626	17,28
	Comp. gl	4791	17907	36024	4829	16695	-35488	9,62	34,602	0,536	18,492	1213,731	9,62	0,536	34,602
3	380C1F1	26719	99175	186877	27309	83840	-176377	54,028	183,015	10,5	651	11346,93	54,028	10,5	183,015
Wind+ice	380C1F2	26787	97646	185358	27310	83734	-176382	54,097	181,38	8,976	466,752	9431,76	54,097	8,976	181,38
Permane	380C1F3	26869	95815	183614	27312	83603	-176392	54,181	179,418	7,222	303,324	7535,556	54,181	7,222	179,418
Wind ang	GW / op	7541	25142	45511	7714	20382	-42597	15,255	45,524	2,914	208,147	3263,373	15,255	2,914	45,524
	Comp. gl	15409	47039	88683	15607	40866	-86022	31,016	87,905	2,661	91,8045	3097,081	31,016	2,661	87,905
4	380C1F1	19735	66290	132922	19854	61848	-131410	39,589	128,138	1,512	93,744	7944,556	39,589	1,512	128,138
Construc	380C1F2	19750	65867	132646	19854	61813	-131417	39,604	127,68	1,229	63,908	6639,36	39,604	1,229	127,68
Permane	380C1F3	19768	65360	132339	19854	61769	-131428	39,622	127,129	0,911	38,262	5339,418	39,622	0,911	127,129
Wind ang	GW / op	2852	9681	19126	2876	8844	-18749	5,728	18,525	0,377	26,92911	1327,594	5,728	0,377	18,525
	Comp. gl	5894	19220	38841	5920	18126	-38557	11,814	37,346	0,284	9,798	1312,951	11,814	0,284	37,346

Belasting op mastvoet, belastinggeval

	M_{langs}	M_{dwars}	N	V_{langs}	V_{dwars}
1a (Wind angle: 0 dgr)	0	20599,04	117,584	0	400,002
1b (Wind angle: 0 dgr)	0	22173,59	121,828	0	431,058
3 (Wind angle: 0 dgr)	0	32249,45	210,398	0	630,884
4 (Wind angle: 0 dgr)	0	21922,8	136,7	0	426,588
1a (Wind angle: 45 dgr)	-8655,63	27044,99	113,433	-164,539	523,05
1b (Wind angle: 45 dgr)	-351,421	22867,11	121,355	-6,554	444,278
3 (Wind angle: 45 dgr)	-1721,03	34674,7	208,577	-32,273	677,242
4 (Wind angle: 45 dgr)	-232,641	22563,88	136,357	-4,313	438,818
1a (Wind angle: 90 dgr)	0	32820,6	109,468	0	633,202
1b (Wind angle: 90 dgr)	0	23499,91	120,984	0	456,35
3 (Wind angle: 90 dgr)	0	36859,76	207,116	0	719,044
4 (Wind angle: 90 dgr)	0	23156,11	136,092	0	450,126
1a (Wind angle: -45 dgr)	8655,633	27044,99	113,433	164,539	523,05
1b (Wind angle: -45 dgr)	351,4212	22867,11	121,355	6,554	444,278
3 (Wind angle: -45 dgr)	1721,028	34674,7	208,577	32,273	677,242
4 (Wind angle: -45 dgr)	232,6411	22563,88	136,357	4,313	438,818

Hoogte mast	Ber & bijlage		74,5 m		
Hoogte onderste stroomdraad (F3)			48,5 m		
			Hoogte	Excentriciteit ophanging t.o.v. hart mast	
Bliksemdraad = GW / (H_{mast} -		0,716 m =	73,784 m	1,459	m
1e traverse - 380C1F1	F2 +	10 m =	68,5 m	4,41	m
2e traverse - 380C1F2	F3 +	10 m =	58,5 m	4,41	m
3e traverse - 380C1F3			48,5 m	4,41	m
Passieve lijn = Comp C	F3 -	4 m =	44,5 m	1,819	m

Uit mast (excl belastingsfactoren)			Uit lijnen (incl belastingsfactoren)				
N	V	M	Nmin	Nmax	Vmax	Mlangs;max	Mdwars;max
[kN]	[kN]	[kNm]	[kN]	[kN]	[kN]	[kNm]	[kNm]
730	157	5508	95	289	255	1196	15497

			Belastingen uit lijnen					Belasting uit mast		
			M_{langs}	M_{dwars}	N	V_{langs}	V_{dwars}	N	V	M
Perm load 1,2	0 deg	1a	0	1538	148	0	18	730	157	5508
		1b	0	1703	152	0	20	730	29	1033
		3	0	2784	**289**	0	31	730	44	1549
		4	0	1809	176	0	21	730	29	1033
		6	0	1697	165	0	19			
	45 deg	1a	-1012	8389	137	-17	134	730	157	5508
		1b	-63	3030	151	-1	43	730	29	1033
		3	-232	6896	286	-4	102	730	44	1549
		4	-48	3134	175	-1	43	730	29	1033
	90 deg	1a	0	**15497**	129	0	**255**	730	157	5508
		1b	0	4383	149	0	66	730	29	1033
		3	0	11098	279	0	174	730	44	1549
		4	0	4480	174	0	66	730	29	1033
	-45 deg	1a	1012	8389	137	17	134	730	157	5508
		1b	63	3030	151	1	43	730	29	1033
		3	232	6896	286	4	102	730	44	1549
		4	48	3134	175	1	43	730	29	1033
Perm load 0,9	0 deg	1a	0	1201	112	0	14	548	157	5508
		1b	0	1353	116	0	16	548	29	1033
		3	0	2486	254	0	28	548	44	1549
		4	0	1482	140	0	17	548	29	1033
		6	0	**1197**	112	0	**14**			
	45 deg	1a	**-1196**	8135	101	**-20**	132	548	157	5508
		1b	-90	2686	115	-2	39	548	29	1033
		3	-275	6607	251	-5	99	548	44	1549
		4	-65	2811	140	-1	40	548	29	1033
	90 deg	1a	0	15311	**95**	0	254	548	157	5508
		1b	0	4055	112	0	62	548	29	1033
		3	0	10833	243	0	172	548	44	1549
		4	0	4166	138	0	63	548	29	1033
	-45 deg	1a	**1196**	8135	101	**20**	132	548	157	5508
		1b	90	2686	115	2	39	548	29	1033
		3	275	6607	251	5	99	548	44	1549
		4	65	2811	140	1	40	548	29	1033

regel				Totaal												
			Loadcase	M_{langs}	M_{dwars}	N	V_{langs}	V_{dwars}	Totaal moment							
1	Perm load 1,2	0 deg	1a	5508	1538	878	157	18	5718,782	1	x			x		
2	Perm load 1,2	0 deg	1b	1033	1703	882	29	20	1991,778	2						
3	Perm load 1,2	0 deg	3	1549	2784	1019	44	31	3185,748	3			x			
4	Perm load 1,2	0 deg	4	1033	1809	906	29	21	2083,108	4						
5	Perm load 1,2	0 deg	6							5						
6										6						
7	Perm load 1,2	45 deg	1a	4907	12283	867	128	245	13227,37	7						
8	Perm load 1,2	45 deg	1b	793	3761	881	22	64	3843,273	8						
9	Perm load 1,2	45 deg	3	1327	7991	1016	35	133	8100,472	9						
10	Perm load 1,2	45 deg	4	778	3865	905	22	64	3942,128	10						
11										11						
12	Perm load 1,2	90 deg	1a	0	21005	859	0	412	21004,55	12		x			x	x
13	Perm load 1,2	90 deg	1b	0	5416	879	0	95	5415,705	13						
14	Perm load 1,2	90 deg	3	0	12647	1009	0	218	12646,97	14						
15	Perm load 1,2	90 deg	4 Construc	0	5512	904	0	95	5512,329	15						
16										16						
17	Perm load 1,2	-45 deg	1a	4907	12283	867	128	245	13227,37	17						
18	Perm load 1,2	-45 deg	1b	793	3761	881	22	64	3843,273	18						
19	Perm load 1,2	-45 deg	3	1327	7991	1016	35	133	8100,472	19						
20	Perm load 1,2	-45 deg	4	778	3865	905	22	64	3942,128	20						
21										21						
22	Perm load 0,9	0 deg	1a	5508	1201	659	157	14	5637,395	22	x			x		
23	Perm load 0,9	0 deg	1b	1033	1353	664	29	16	1702,321	23						
24	Perm load 0,9	0 deg	3	1549	2486	801	44	28	2929,172	24						
25	Perm load 0,9	0 deg	4	1033	1482	688	29	17	1806,58	25						
26	Perm load 0,9	0 deg	6							26						
27										27						
28	Perm load 0,9	45 deg	1a	5090	12029	649	131	243	13062,08	28						
29	Perm load 0,9	45 deg	1b	821	3416	662	22	60	3513,561	29						
30	Perm load 0,9	45 deg	3	1370	7703	798	36	130	7823,439	30						
31	Perm load 0,9	45 deg	4 Construc	795	3541	687	22	61	3629,402	31						
32										32						
33	Perm load 0,9	90 deg	1a	0	20819	642	0	411	20819,35	33						
34	Perm load 0,9	90 deg	1b	0	5088	660	0	92	5087,571	34						
35	Perm load 0,9	90 deg	3	0	12382	791	0	216	12382,15	35						
36	Perm load 0,9	90 deg	4	0	5199	685	0	92	5198,968	36						
37										37						
38	Perm load 0,9	-45 deg	1a	5090	12029	649	131	243	13062,08	38						
39	Perm load 0,9	-45 deg	1b	821	3416	662	22	60	3513,561	39						
40	Perm load 0,9	-45 deg	3	1370	7703	798	36	130	7823,439	40						
41	Perm load 0,9	-45 deg	4	795	3541	687	22	61	3629,402	41						
			Max	5508	21005	1019	157	412	21005							

samenvatting

	Mast	Bijlage		Wind	Loadcase		M_{langs}	M_{dwars}	N	V_{langs}	V_{dwars}
1	W2S400+2	23-AF	Perm load	0 deg	1a		5508	1538	878	157	18
3	W2S400+2	23-AF	Perm load	0 deg		3	1549	2784	1019	44	31
12	W2S400+2	23-AF	Perm load	90 deg	1a		0	21005	859	0	412
22	W2S400+2	23-AF	Perm load	0 deg	1a		5508	1201	659	157	14

W2S400+22.5 U TOWER (rev 6.0, date: Appendix AF
Loadcases for tower strength (ultimate limit state)
\- \`
Loadcase according to 50341-3-15

			AHEAD			BACK		Totaal			Belastingen op mastvoet, per lijn				
		[N]	[N]	[N]	[N]	[N]	[N]	Vert	Dwars	Langs	M_{langs}	M_{dwars}	N	V_{langs}	V_{dwars}
	Attachment point							[kN]	[kN]	[kN]					
1a	GW / opgv	2802	340	19393	2802	340	-19393	5,604	0,68	0	0	71,29364	5,604	0	0,68
Wind, 10 (	380C1F1	21696	2592	147901	21696	2592	-147901	43,392	5,184	0	0	494,6227	43,392	0	5,184
Permaner	380C1F2	21696	2591	147901	21696	2591	-147901	43,392	5,182	0	0	442,6857	43,392	0	5,182
Wind angl	380C1F3	21696	2591	147901	21696	2591	-147901	43,392	5,182	0	0	445,6576	43,392	0	5,182
	Comp.cor	5881	704	40186	5881	704	-40186	11,762	1,408	0	0	84,05108	11,762	0	1,408
1b	GW / opgv	2877	384	21989	2877	384	-21989	5,754	0,768	0	0	77,98314	5,754	0	0,768
Wind, -20	380C1F1	22372	2968	169916	22372	2968	-169916	44,744	5,936	0	0	544,577	44,744	0	5,936
Permaner	380C1F2	22372	2968	169916	22372	2968	-169916	44,744	5,936	0	0	485,217	44,744	0	5,936
Wind angl	380C1F3	22372	2968	169916	22372	2968	-169916	44,744	5,936	0	0	503,2633	44,744	0	5,936
	Comp.cor	6032	788	45115	6032	788	-45115	12,064	1,576	0	0	92,07642	12,064	0	1,576
3	GW / opgv	11056	1063	60818	11056	1063	-60818	22,112	2,126	0	0	243,1449	22,112	0	2,126
Wind+ice,	380C1F1	36893	4175	238860	36893	4175	-238860	73,786	8,35	0	0	813,8713	73,786	0	8,35
Permaner	380C1F2	36893	4175	238860	36893	4175	-238860	73,786	8,35	0	0	730,3713	73,786	0	8,35
Wind angl	380C1F3	36893	4174	238860	36893	4174	-238860	73,786	8,348	0	0	723,6026	73,786	0	8,348
	Comp.cor	22546	2143	122585	22546	2143	-122585	45,092	4,286	0	0	272,7493	45,092	0	4,286
4	GW / opgv	3721	437	25027	3721	437	-25027	7,442	0,874	0	0	92,68822	7,442	0	0,874
Constructi	380C1F1	25457	3001	171827	25457	3001	-171827	50,914	6,002	0	0	575,6477	50,914	0	6,002
Permaner	380C1F2	25457	3001	171827	25457	3001	-171827	50,914	6,002	0	0	515,6277	50,914	0	6,002
Wind angl	380C1F3	25457	3001	171828	25457	3001	-171828	50,914	6,002	0	0	517,1351	50,914	0	6,002
	Comp.cor	7737	897	51347	7737	897	-51347	15,474	1,794	0	0	107,9802	15,474	0	1,794
6	GW / opgv	3139	373	21370	3139	373	-21370	6,278	0,746	0	0	78,78698	6,278	0	0,746
Permaner	380C1F1	24291	2838	162567	24291	2838	-162567	48,582	5,676	0	0	546,2926	48,582	0	5,676
Permaner	380C1F2	24291	2838	162567	24291	2838	-162567	48,582	5,676	0	0	489,5326	48,582	0	5,676
	380C1F3	24291	2838	162567	24291	2838	-162567	48,582	5,676	0	0	489,6791	48,582	0	5,676
	Comp.cor	6587	772	44255	6587	772	-44255	13,174	1,544	0	0	92,67151	13,174	0	1,544
1a	GW / opgv	2551	3348	28685	2535	3572	-29715	5,086	6,92	-1,03	-70,555	496,4493	5,086	-1,03	6,92
Wind, 10 (	380C1F1	20177	19871	192174	20048	21160	-197515	40,225	41,031	-5,341	-312,449	2577,706	40,225	-5,341	41,031
Permaner	380C1F2	20289	18798	187825	20163	20006	-192728	40,452	38,804	-4,903	-237,796	2060,387	40,452	-4,903	38,804
Wind angl	380C1F3	20428	17504	182729	20308	18616	-187101	40,736	36,12	-4,372	-322,584	2724,512	40,736	-4,372	36,12
	Comp.cor	5457	5548	53155	5421	5909	-54708	10,878	11,457	-1,553	-69,1085	529,6236	10,878	-1,553	11,457
1b	GW / opgv	2852	962	22519	2849	1005	-22598	5,701	1,967	-0,079	-5,4115	159,8809	5,701	-0,079	1,967
Wind, -20	380C1F1	22250	6306	172168	22232	6550	-172505	44,482	12,856	-0,337	-19,7145	948,2416	44,482	-0,337	12,856
Permaner	380C1F2	22264	6102	171904	22248	6331	-172202	44,512	12,433	-0,298	-14,453	799,2984	44,512	-0,298	12,433
Wind angl	380C1F3	22280	5856	171606	22266	6067	-171861	44,546	11,923	-0,255	-18,8149	944,7192	44,546	-0,255	11,923
	Comp.cor	5999	1722	45782	5994	1791	-45882	11,993	3,513	-0,1	-4,45	178,1438	11,993	-0,1	3,513
3	GW / opgv	10951	4026	62919	10936	4243	-63226	21,887	8,269	-0,307	-21,0295	662,9482	21,887	-0,307	8,269
Wind+ice,	380C1F1	36465	13542	247216	36407	14230	-248437	72,872	27,772	-1,221	-71,4285	1946,028	72,872	-1,221	27,772
Permaner	380C1F2	36512	12968	246255	36459	13614	-247340	72,971	26,582	-1,085	-52,6225	1611,029	72,971	-1,085	26,582
Wind angl	380C1F3	36566	12276	245167	36520	12871	-246098	73,086	25,147	-0,931	-68,6929	1962,079	73,086	-0,931	25,147
	Comp.cor	22397	6927	125314	22376	7277	-125720	44,773	14,204	-0,406	-18,067	713,5201	44,773	-0,406	14,204
4	GW / opgv	3706	1012	25379	3703	1054	-25432	7,409	2,066	-0,053	-3,6305	174,1947	7,409	-0,053	2,066
Constructi	380C1F1	25370	6332	173586	25358	6576	-173851	50,728	12,908	-0,265	-15,5025	978,8285	50,728	-0,265	12,908
Permaner	380C1F2	25380	6129	173378	25369	6358	-173613	50,749	12,487	-0,235	-11,3975	829,4226	50,749	-0,235	12,487
Wind angl	380C1F3	25392	5885	173145	25382	6095	-173344	50,774	11,98	-0,199	-14,683	958,0116	50,774	-0,199	11,98
	Comp.cor	7715	1828	51793	7712	1896	-51860	15,427	3,724	-0,067	-2,9815	193,7797	15,427	-0,067	3,724
1a	GW / opgv	2394	6676	44229	2394	6676	-44229	4,788	13,352	0	0	935,7271	4,788	0	13,352
Wind, 10 (	380C1F1	18808	39082	277458	18808	39082	-277458	37,616	78,164	0	0	4738,481	37,616	0	78,164
Permaner	380C1F2	18916	36835	267273	18916	36835	-267273	37,832	73,67	0	0	3739,834	37,832	0	73,67
Wind angl	380C1F3	19061	34121	254959	19061	34121	-254959	38,122	68,242	0	0	5090,788	38,122	0	68,242
	Comp.cor	5087	10935	77830	5087	10935	-77830	10,174	21,87	0	0	991,7215	10,174	0	21,87
1b	GW / opgv	2785	1600	24148	2785	1600	-24148	5,57	3,2	0	0	243,7637	5,57	0	3,2
Wind, -20	380C1F1	21893	9969	179340	21893	9969	-179340	43,786	19,938	0	0	1359,469	43,786	0	19,938
Permaner	380C1F2	21943	9537	178277	21943	9537	-178277	43,886	19,074	0	0	1118,626	43,886	0	19,074
Wind angl	380C1F3	22001	9018	177068	22001	9018	-177068	44,002	18,036	0	0	1394,967	44,002	0	18,036
	Comp.cor	5901	2749	47899	5901	2749	-47899	11,802	5,498	0	0	266,1288	11,802	0	5,498
3	GW / opgv	10692	7273	69143	10692	7273	-69143	21,384	14,546	0	0	1090,704	21,384	0	14,546
Wind+ice,	380C1F1	35409	23865	271953	35409	23865	-271953	70,818	47,73	0	0	3104,512	70,818	0	47,73
Permaner	380C1F2	35544	22649	268432	35544	22649	-268432	71,088	45,298	0	0	2510,451	71,088	0	45,298
Wind angl	380C1F3	35705	21184	264371	35705	21184	-264371	71,41	42,368	0	0	3230,268	71,41	0	42,368
	Comp.cor	21996	12156	133756	21996	12156	-133756	43,992	24,312	0	0	1161,905	43,992	0	24,312
4	GW / opgv	3659	1642	26505	3659	1642	-26505	7,318	3,284	0	0	257,2264	7,318	0	3,284
Constructi	380C1F1	25109	9972	179292	25109	9972	-179292	50,218	19,944	0	0	1388,185	50,218	0	19,944
Permaner	380C1F2	25147	9544	178438	25147	9544	-178438	50,294	19,088	0	0	1147,565	50,294	0	19,088
Wind angl	380C1F3	25190	9028	177471	25190	9028	-177471	50,38	18,056	0	0	1405,748	50,38	0	18,056
	Comp.cor	7649	2843	53252	7649	2843	-53252	15,298	5,686	0	0	280,8541	15,298	0	5,686
1a	GW / opgv	2535	3572	29715	2551	3348	-28685	5,086	6,92	1,03	70,555	496,4493	5,086	1,03	6,92
Wind, 10 (	380C1F1	20048	21160	197515	20177	19871	-192174	40,225	41,031	5,341	312,4485	2577,706	40,225	5,341	41,031
Permaner	380C1F2	20163	20006	192728	20289	18798	-187825	40,452	38,804	4,903	237,7955	2060,387	40,452	4,903	38,804
Wind angl	380C1F3	20308	18616	187101	20428	17504	-182729	40,736	36,12	4,372	322,5836	2724,512	40,736	4,372	36,12
	Comp.cor	5421	5909	54708	5457	5548	-53155	10,878	11,457	1,553	69,1085	529,6236	10,878	1,553	11,457
1b	GW / opgv	2849	1005	22598	2852	962	-22519	5,701	1,967	0,079	5,4115	159,8809	5,701	0,079	1,967
Wind, -20	380C1F1	22232	6550	172505	22250	6306	-172168	44,482	12,856	0,337	19,7145	948,2416	44,482	0,337	12,856
Permaner	380C1F2	22248	6331	172202	22264	6102	-171904	44,512	12,433	0,298	14,453	799,2984	44,512	0,298	12,433
Wind angl	380C1F3	22266	6067	171861	22280	5856	-171606	44,546	11,923	0,255	18,81492	944,7192	44,546	0,255	11,923
	Comp.cor	5994	1791	45882	5999	1722	-45782	11,993	3,513	0,1	4,45	178,1438	11,993	0,1	3,513
3	GW / opgv	10936	4243	63226	10951	4026	-62919	21,887	8,269	0,307	21,0295	662,9482	21,887	0,307	8,269
Wind+ice,	380C1F1	36407	14230	248437	36465	13542	-247216	72,872	27,772	1,221	71,4285	1946,028	72,872	1,221	27,772
Permaner	380C1F2	36459	13614	247340	36512	12968	-246255	72,971	26,582	1,085	52,6225	1611,029	72,971	1,085	26,582
Wind angl	380C1F3	36520	12871	246098	36566	12276	-245167	73,086	25,147	0,931	68,6929	1962,079	73,086	0,931	25,147
	Comp.cor	22376	7277	125720	22397	6927	-125314	44,773	14,204	0,406	18,067	713,5201	44,773	0,406	14,204
4	GW / opgv	3703	1054	25432	3706	1012	-25379	7,409	2,066	0,053	3,6305	174,1947	7,409	0,053	2,066
Constructi	380C1F1	25358	6576	173851	25370	6332	-173586	50,728	12,908	0,265	15,5025	978,8285	50,728	0,265	12,908
Permaner	380C1F2	25369	6358	173613	25380	6129	-173378	50,749	12,487	0,235	11,3975	829,4226	50,749	0,235	12,487
Wind angl	380C1F3	25382	6095	173344	25392	5885	-173145	50,774	11,98	0,199	14,68302	958,0116	50,774	0,199	11,98
	Comp.cor	7712	1896	51860	7715	1828	-51793	15,427	3,724	0,067	2,9815	193,7797	15,427	0,067	3,724
1a	GW / opgv	2121	268	15238	2121	268	-15238	4,242	0,536	0	0	55,42322	4,242	0	0,536
Wind, 10 (	380C1F1	16457	2052	116952	16457	2052	-116952	32,914	4,104	0	0	385,2347	32,914	0	4,104
Permaner	380C1F2	16457	2051	116952	16457	2051	-116952	32,914	4,102	0	0	344,0977	32,914	0	4,102
Wind angl	380C1F3	16457	2050	116952	16457	2050	-116952	32,914	4,1	0	0	350,5359	32,914	0	4,1
	Comp.cor	4456	555	31625	4456	555	-31625	8,912	1,11	0	0	65,60593	8,912	0	1,11
1b	GW / opgv	2190	307	17591	2190	307	-17591	4,38	0,614	0	0	61,3748	4,38	0	0,614
Wind, -20	380C1F1	17086	2400	137365	17086	2400	-137365	34,172	4,8	0	0	431,4985	34,172	0	4,8
Permaner	380C1F2	17086	2400	137365	17086	2400	-137365	34,172	4,8	0	0	383,4985	34,172	0	4,8
Wind angl	380C1F3	17086	2400	137365	17086	2400	-137365	34,172	4,8	0	0	404,0201	34,172	0	4,8
	Comp.cor	4594	631	36104	4594	631	-36104	9,188	1,262	0	0	72,87197	9,188	0	1,262
3	GW / opgv	10417	1016	58119	10417	1016	-58119	20,834	2,032	0	0	231,0699	20,834	0	2,032
Wind+ice,	380C1F1	31789	3713	212371	31789	3713	-212371	63,578	7,426	0	0	714,8	63,578	0	7,426
Permaner	380C1F2	31789	3712	212371	31789	3712	-212371	63,578	7,424	0	0	640,443	63,578	0	7,424
Wind angl	380C1F3	31789	3712	212371	31789	3712	-212371	63,578	7,424	0	0	640,5327	63,578	0	7,424
	Comp.cor	21210	2045	117006	21210	2045	-117006	42,42	4,09	0	0	259,167	42,42	0	4,09
4	GW / opgv	3050	370	21178	3050	370	-21178	6,1	0,74	0	0	77,591	6,1	0	0,74
Constructi	380C1F1	20256	2483	142149	20256	2483	-142149	40,512	4,966	0	0	469,1689	40,512	0	4,966
Permaner	380C1F2	20256	2483	142149	20256	2483	-142149	40,512	4,966	0	0	419,5089	40,512	0	4,966

Belasting op mastvoet, belastinggeval

	M_{langs}	M_{dwars}	N	V_{langs}	V_{dwars}
1a	0	1538,311	147,542	0	17,636
Wind angle: 0 dgr					
1b	0	1703,117	152,05	0	20,152
Wind angle: 0 dgr					
3	0	2783,739	288,562	0	31,46
Wind angle: 0 dgr					
4	0	1809,079	175,658	0	20,674
Wind angle: 0 dgr					
6	0	1696,963	165,198	0	19,318
0					
1a	-1012,49	8388,678	137,377	-17,199	134,332
Wind angle: 45 dgr					
1b	-62,8439	3030,284	151,234	-1,069	42,692
Wind angle: 45 dgr					
3	-231,84	6895,604	285,589	-3,95	101,974
Wind angle: 45 dgr					
4	-48,195	3134,237	175,087	-0,819	43,165
Wind angle: 45 dgr					
1a	0	15496,55	128,532	0	255,298
Wind angle: 90 dgr					
1b	0	4382,955	149,046	0	65,746
Wind angle: 90 dgr					
3	0	11097,84	278,692	0	174,254
Wind angle: 90 dgr					
4	0	4479,579	173,508	0	66,058
Wind angle: 90 dgr					
1a	1012,491	8388,678	137,377	17,199	134,332
Wind angle: -45 dgr					
1b	62,84392	3030,284	151,234	1,069	42,692
Wind angle: -45 dgr					
3	231,8404	6895,604	285,589	3,95	101,974
Wind angle: -45 dgr					
4	48,19502	3134,237	175,087	0,819	43,165
Wind angle: -45 dgr					
1a	0	1200,898	111,896	0	13,952
Wind angle: 0 dgr					
1b	0	1353,264	116,084	0	16,276
Wind angle: 0 dgr					
3	0	2486,013	253,988	0	28,396
Wind angle: 0 dgr					
4	0	1482,281	140,298	0	17,154
Wind angle: 0 dgr					

Wind angl	380C1F3	20256	2483	142149	20256	2483	-142149	40,512	4,966	0	0	425,5184	40,512	0	4,966												
	Comp.cor	6331	758	43412	6331	758	-43412	12,662	1,516	0	0	90,49418	12,662	0	1,516												
6	GW / opg	2121	266	15238	2121	266	-15238	4,242	0,532	0	0	55,14922	4,242	0	0,532		6	0	1196,771	111,896	0	13,882					
Permanen	380C1F1	16457	2041	116952	16457	2041	-116952	32,914	4,082	0	0	383,9477	32,914	0	4,082		0										
Permanen	380C1F2	16457	2041	116952	16457	2041	-116952	32,914	4,082	0	0	343,1277	32,914	0	4,082												
	380C1F3	16457	2041	116952	16457	2041	-116952	32,914	4,082	0	0	349,2078	32,914	0	4,082												
	Comp.cor	4456	552	31625	4456	552	-31625	8,912	1,104	0	0	65,33893	8,912	0	1,104												
1a	GW / opg	1874	3313	26675	1861	3539	-27826	3,735	6,852	-1,151	-78,8435	485,8334	3,735	-1,151	6,852	1a		-1195,59	8134,652	101,072	-20,293	132,097					
Wind, 10	380C1F1	14840	19546	173683	14733	20851	-179945	29,573	40,397	-6,262	-366,327	2493,641	29,573	-6,262	40,397	Wind angle:	45 dgr										
Permanen	380C1F2	14935	18459	168524	14828	19683	-174337	29,763	38,142	-5,813	-281,931	1981,142	29,763	-5,813	38,142												
Wind angl	380C1F3	15058	17147	162400	14952	18275	-167659	30,01	35,422	-5,259	-388,03	2657,361	30,01	-5,259	35,422												
	Comp.cor	4010	5459	48127	3981	5825	-49935	7,991	11,284	-1,808	-80,456	516,6736	7,991	-1,808	11,284												
1b	GW / opg	2156	889	18354	2151	932	-18464	4,307	1,821	-0,11	-7,535	143,7324	4,307	-0,11	1,821	1b		-90,327	2686,129	114,942	-1,537	38,932					
Wind, -20	380C1F1	16915	5755	140650	16891	6002	-141135	33,806	11,757	-0,485	-28,3725	836,869	33,806	-0,485	11,757	Wind angle:	45 dgr										
Permanen	380C1F2	16934	5549	140269	16913	5781	-140700	33,847	11,33	-0,431	-20,9035	698,7703	33,847	-0,431	11,33												
Wind angl	380C1F3	16956	5301	139839	16937	5514	-140207	33,893	10,815	-0,368	-27,1525	847,4238	33,893	-0,368	10,815												
	Comp.cor	4548	1570	37070	4541	1639	-37213	9,089	3,209	-0,143	-6,3635	159,3334	9,089	-0,143	3,209												
3	GW / opg	10304	3981	60394	10288	4199	-60726	20,592	8,18	-0,332	-22,742	651,1407	20,592	-0,332	8,18		3	-274,723	6607,133	250,539	-4,674	99,095					
Wind+ice,	380C1F1	31285	13110	222560	31218	13802	-224028	62,503	26,912	-1,468	-85,878	1849,99	62,503	-1,468	26,912	Wind angle:	45 dgr										
Permanen	380C1F2	31339	12532	221401	31278	13182	-222710	62,617	25,714	-1,309	-63,4865	1523,27	62,617	-1,309	25,714												
Wind angl	380C1F3	31401	11837	220085	31348	12435	-221211	62,749	24,272	-1,126	-83,0808	1882,436	62,749	-1,126	24,272												
	Comp.cor	21050	6833	119975	21028	7184	-120414	42,078	14,017	-0,439	-19,5355	700,2964	42,078	-0,439	14,017												
4	GW / opg	3030	947	21637	3027	989	-21705	6,057	1,936	-0,068	-4,658	159,3274	6,057	-0,068	1,936		4	-64,9455	2810,95	139,562	-1,103	39,715					
Constructi	380C1F1	20144	5825	144547	20128	6070	-144906	40,272	11,895	-0,359	-21,0015	873,457	40,272	-0,359	11,895	Wind angle:	45 dgr										
Permanen	380C1F2	20157	5621	144267	20142	5851	-144584	40,299	11,472	-0,317	-15,3745	734,1106	40,299	-0,317	11,472												
Wind angl	380C1F3	20171	5374	143950	20159	5586	-144221	40,33	10,96	-0,271	-19,9955	867,5141	40,33	-0,271	10,96												
	Comp.cor	6304	1692	43997	6300	1760	-44085	12,604	3,452	-0,088	-3,916	176,5407	12,604	-0,088	3,452												
1a	GW / opg	1768	6659	43288	1768	6659	-43288	3,536	13,318	0	0	927,8768	3,536	0	13,318	1a		0	15311,35	94,51	0	254,092					
Wind, 10	380C1F1	13836	38914	267994	13836	38914	-267994	27,672	77,828	0	0	4674,972	27,672	0	77,828	Wind angle:	90 dgr										
Permanen	380C1F2	13906	36656	257149	13906	36656	-257149	27,812	73,312	0	0	3678,283	27,812	0	73,312												
Wind angl	380C1F3	14003	33927	243935	14003	33927	-243935	28,006	67,854	0	0	5047,4	28,006	0	67,854												
	Comp.cor	3742	10890	75275	3742	10890	-75275	7,484	21,78	0	0	982,8234	7,484	0	21,78												
1b	GW / opg	2076	1538	20570	2076	1538	-20570	4,152	3,076	0	0	229,0163	4,152	0	3,076	1b		0	4054,821	112,134	0	62,294					
Wind, -20	380C1F1	16457	9467	150707	16457	9467	-150707	32,914	18,934	0	0	1252,79	32,914	0	18,934	Wind angle:	90 dgr										
Permanen	380C1F2	16518	9029	149247	16518	9029	-149247	33,036	18,058	0	0	1021,502	33,036	0	18,058												
Wind angl	380C1F3	16591	8502	147575	16591	8502	-147575	33,182	17,004	0	0	1303,036	33,182	0	17,004												
	Comp.cor	4425	2611	40017	4425	2611	-40017	8,85	5,222	0	0	248,4772	8,85	0	5,222												
3	GW / opg	10036	7236	67039	10036	7236	-67039	20,072	14,472	0	0	1079,85	20,072	0	14,472		3	0	10833,02	243,064	0	171,806					
Wind+ice,	380C1F1	30140	23507	251613	30140	23507	-251613	60,28	47,014	0	0	3016,154	60,28	0	47,014	Wind angle:	90 dgr										
Permanen	380C1F2	30279	22282	247556	30279	22282	-247556	60,558	44,564	0	0	2428,415	60,558	0	44,564												
Wind angl	380C1F3	30448	20806	242850	30448	20806	-242850	60,896	41,612	0	0	3159,147	60,896	0	41,612												
	Comp.cor	20629	12072	129053	20629	12072	-129053	41,258	24,144	0	0	1149,456	41,258	0	24,144												
4	GW / opg	2975	1582	23066	2975	1582	-23066	5,95	3,164	0	0	242,9735	5,95	0	3,164		4	0	4166,218	137,604	0	62,798					
Constructi	380C1F1	19820	9496	152133	19820	9496	-152133	39,64	18,992	0	0	1285,844	39,64	0	18,992	Wind angle:	90 dgr										
Permanen	380C1F2	19865	9064	151012	19865	9064	-151012	39,73	18,128	0	0	1054,417	39,73	0	18,128												
Wind angl	380C1F3	19918	8543	149737	19918	8543	-149737	39,836	17,086	0	0	1318,794	39,836	0	17,086												
	Comp.cor	6224	2714	45874	6224	2714	-45874	12,448	5,428	0	0	264,1889	12,448	0	5,428												
1a	GW / opg	1861	3539	27826	1874	3313	-26675	3,735	6,852	1,151	78,8435	485,8334	3,735	1,151	6,852	1a		1195,587	8134,652	101,072	20,293	132,097					
Wind, 10	380C1F1	14733	20851	179945	14840	19546	-173683	29,573	40,397	6,262	366,327	2493,641	29,573	6,262	40,397	Wind angle:	-45 dgr										
Permanen	380C1F2	14828	19683	174337	14935	18459	-168524	29,763	38,142	5,813	281,9305	1981,142	29,763	5,813	38,142												
Wind angl	380C1F3	14952	18275	167659	15058	17147	-162400	30,01	35,422	5,259	388,0301	2657,361	30,01	5,259	35,422												
	Comp.cor	3981	5825	49935	4010	5459	-48127	7,991	11,284	1,808	80,456	516,6736	7,991	1,808	11,284												
1b	GW / opg	2151	932	18464	2156	889	-18354	4,307	1,821	0,11	7,535	143,7324	4,307	0,11	1,821	1b		90,32701	2686,129	114,942	1,537	38,932					
Wind, -20	380C1F1	16891	6002	141135	16915	5755	-140650	33,806	11,757	0,485	28,3725	836,869	33,806	0,485	11,757	Wind angle:	-45 dgr										
Permanen	380C1F2	16913	5781	140700	16934	5549	-140269	33,847	11,33	0,431	20,9035	698,7703	33,847	0,431	11,33												
Wind angl	380C1F3	16937	5514	140207	16956	5301	-139839	33,893	10,815	0,368	27,15251	847,4238	33,893	0,368	10,815												
	Comp.cor	4541	1639	37213	4548	1570	-37070	9,089	3,209	0,143	6,3635	159,3334	9,089	0,143	3,209												
3	GW / opg	10288	4199	60726	10304	3981	-60394	20,592	8,18	0,332	22,742	651,1407	20,592	0,332	8,18		3	274,7228	6607,133	250,539	4,674	99,095					
Wind+ice,	380C1F1	31218	13802	224028	31285	13110	-222560	62,503	26,912	1,468	85,878	1849,99	62,503	1,468	26,912	Wind angle:	-45 dgr										
Permanen	380C1F2	31278	13182	222710	31339	12532	-221401	62,617	25,714	1,309	63,4865	1523,27	62,617	1,309	25,714												
Wind angl	380C1F3	31348	12435	221211	31401	11837	-220085	62,749	24,272	1,126	83,08078	1882,436	62,749	1,126	24,272												
	Comp.cor	21028	7184	120414	21050	6833	-119975	42,078	14,017	0,439	19,5355	700,2964	42,078	0,439	14,017												
4	GW / opg	3027	989	21705	3030	947	-21637	6,057	1,936	0,068	4,658	159,3274	6,057	0,068	1,936		4	64,94546	2810,95	139,562	1,103	39,715					
Constructi	380C1F1	20128	6070	144906	20144	5825	-144547	40,272	11,895	0,359	21,0015	873,457	40,272	0,359	11,895	Wind angle:	-45 dgr										
Permanen	380C1F2	20142	5851	144584	20157	5621	-144267	40,299	11,472	0,317	15,3745	734,1106	40,299	0,317	11,472												
Wind angl	380C1F3	20159	5586	144221	20171	5374	-143950	40,33	10,96	0,271	19,99546	867,5141	40,33	0,271	10,96												
	Comp.cor	6300	1760	44085	6304	1692	-43997	12,604	3,452	0,088	3,916	176,5407	12,604	0,088	3,452												

W25400+2 23-AF2

Hoogte mast	Ber & bijlage	74,5	m		
Hoogte onderste stroomdraad (F3)		48,5	m		
		Hoogte		Excentriciteit ophanging t.o.v. hart mast	
Bliksemdraad = GW / CH_{mast} -	0,716 m =	73,784	m	1,459	m
1e traverse - 380C1F1 F2 +	10 m =	68,5	m	4,41	m
2e traverse - 380C1F2 F3 +	10 m =	58,5	m	4,41	m
3e traverse - 380C1F3		48,5	m	4,41	m
Passieve lijn = Comp C. F3 -	4 m =	44,5	m	1,819	m

Uit mast				Uit lijnen					
ULS (incl bel factoren)				SLS					
N	V	M		Nmin	Nmax	Vmax	Mlangs;ma	Mdwars;max	
[kN]	[kN]	[kNm]		[kN]	[kN]	[kN]	[kNm]	[kNm]	
730	157	5508		110	220	173	642	10594	

			Belastingen uit lijnen					Belasting uit mast		
			M_{langs}	M_{dwars}	N	V_{langs}	V_{dwars}	N	V	M
SLS	0 deg	1a	0	**1314**	124	0	**15**	608	105	3672
		1b	0	1472	128	0	18	608	105	3672
		3	0	2208	**220**	0	25	608	105	3672
		4	0	1508	143	0	17	608	105	3672
	45 deg	1a	**-642**	5860	117	**-11**	93	608	105	3672
		1b	-36	2356	128	-1	33	608	105	3672
		3	-151	4948	218	-3	72	608	105	3672
		4	-28	2391	143	0	32	608	105	3672
	90 deg	1a	0	**10594**	**110**	0	**173**	608	105	3672
		1b	0	3253	126	0	48	608	105	3672
		3	0	7747	213	0	121	608	105	3672
		4	0	3285	142	0	48	608	105	3672
	-45 deg	1a	**642**	5860	117	**11**	93	608	105	3672
		1b	36	2356	128	1	33	608	105	3672
		3	151	4948	218	3	72	608	105	3672
		4	28	2391	143	0	32	608	105	3672

regel		Loadcase	Totaal M_{langs}	M_{dwars}	N	V_{langs}	V_{dwars}	Totaal moment
1 Perm load 1,2	0 deg	1a	3672	4986	732	105	120	6192,339
2 Perm load 1,2	0 deg	1b	3672	5144	736	105	122	6320,253
3 Perm load 1,2	0 deg	3	3672	5880	828	105	130	6932,619
4 Perm load 1,2	0 deg	4	3672	5180	751	105	122	6349,564
5								
6 Perm load 1,2	45 deg	1a	4314	9532	726	116	197	10463,24
7 Perm load 1,2	45 deg	1b	3708	6028	736	105	137	7076,533
8 Perm load 1,2	45 deg	3	3823	8620	826	107	177	9429,555
9 Perm load 1,2	45 deg	4	3700	6063	751	105	137	7102,703
10								
11 Perm load 1,2	90 deg	1a	3672	14266	718	105	278	14730,7
12 Perm load 1,2	90 deg	1b	3672	6925	735	105	153	7838,75
13 Perm load 1,2	90 deg	3	3672	11419	821	105	225	11994,73
14 Perm load 1,2	90 deg	4 Construct	3672	6957	750	105	152	7866,495
15								
16 Perm load 1,2	-45 deg	1a	3239	9532	726	116	197	10067,56
17 Perm load 1,2	-45 deg	1b	2632	6028	736	105	137	6577,149
18 Perm load 1,2	-45 deg	3	2748	8620	826	107	177	9047,056
19 Perm load 1,2	-45 deg	4	2625	6063	751	105	137	6606,464
			4314	14266	828	116	278	14731
					718			

	M langs max	M dwars max	N max	V langs max	V dwars max	M tot max	N min
1							
2							
3		x					
4							
5							
6 x			x				
7							
8							
9							
10							
11	x			x	x	x	
12							
13							
14							
15							
16				x			
17							
18							
19							

samenvatting

	Mast	Bijlage	Wind	Loadcase	M_{langs}	M_{dwars}	N	V_{langs}	V_{dwars}
3	W25400+2:23-AF2		Perm load :0 deg	3	3672	5880	828	105	130
6	W25400+2:23-AF2		Perm load :45 deg	1a	4314	9532	726	116	197
11	W25400+2:23-AF2		Perm load :90 deg	1a	3672	14266	718	105	278
	W25400+2:23-AF2		#N/B	#N/B	#N/B	#N/B	#N/B	#N/B	#N/B
	W25400+2:23-AF2		#N/B	#N/B	#N/B	#N/B	#N/B	#N/B	#N/B
	W25400+2:23-AF2		#N/B	#N/B	#N/B	#N/B	#N/B	#N/B	#N/B

W2S400+22.5 U TOWER (rev 6.0, date: 0 Appendix AF2
W2S400+22.5 U TOWER (rev 6.0, date: 0 Appendix AF2
Loadcases for tower strength (serviceabilitylimit state)
Loadcase according to 50341-3-15

		AHEAD			BACK			Totaal		
	[N]	[N]	[N]	[N]	[N]			Vert	Dwars	Langs
	Attachment point							[kN]	[kN]	[kN]
1a	GW / opgv	2349	292	16656	2349	292	-16656	4,698	0,584	0
Wind, 10	380C1F1 /	18211	2233	127536	18211	2233	-127536	36,422	4,466	0
Permanen	380C1F2 /	18211	2233	127536	18211	2233	-127536	36,422	4,466	0
Wind ang	380C1F3 /	18211	2232	127536	18211	2232	-127536	36,422	4,464	0
	Comp.con	4933	605	34548	4933	605	-34548	9,866	1,21	0
1b	GW / opgv	2420	334	19099	2420	334	-19099	4,84	0,668	0
Wind, -20	380C1F1 /	18858	2594	148551	18858	2594	-148551	37,716	5,188	0
Permanen	380C1F2 /	18858	2594	148551	18858	2594	-148551	37,716	5,188	0
Wind ang	380C1F3 /	18858	2594	148551	18858	2594	-148551	37,716	5,188	0
	Comp.con	5076	685	39195	5076	685	-39195	10,152	1,37	0
3	GW / opgv	7932	824	47121	7932	824	-47121	15,864	1,648	0
Wind+ice,	380C1F1 /	28549	3407	194948	28549	3407	-194948	57,098	6,814	0
Permanen	380C1F2 /	28549	3406	194948	28549	3406	-194948	57,098	6,812	0
Wind ang	380C1F3 /	28549	3406	194948	28549	3406	-194948	57,098	6,812	0
	Comp.con	16212	1662	95124	16212	1662	-95124	32,424	3,324	0
4	GW / opgv	2971	362	20714	2971	362	-20714	5,942	0,724	0
Constructi	380C1F1 /	20770	2535	145154	20770	2535	-145154	41,54	5,07	0
Permanen	380C1F2 /	20770	2535	145154	20770	2535	-145154	41,54	5,07	0
Wind ang	380C1F3 /	20770	2535	145154	20770	2535	-145154	41,54	5,07	0
	Comp.con	6189	744	42586	6189	744	-42586	12,378	1,488	0
1a	GW / opgv	2181	2288	22373	2167	2438	-23054	4,348	4,726	-0,681
Wind, 10	380C1F1 /	17238	13698	154130	17141	14554	-157539	34,379	28,252	-3,409
Permanen	380C1F2 /	17320	12986	151380	17228	13788	-154482	34,548	26,774	-3,102
Wind ang	380C1F3 /	17420	12128	148191	17334	12865	-150925	34,754	24,993	-2,734
	Comp.con	4661	3818	42337	4634	4058	-43329	9,295	7,876	-0,992
1b	GW / opgv	2406	718	19399	2404	746	-19444	4,81	1,464	-0,045
Wind, -20	380C1F1 /	18789	4815	149824	18779	4978	-150016	37,568	9,793	-0,192
Permanen	380C1F2 /	18797	4680	149674	18788	4832	-149843	37,585	9,512	-0,169
Wind ang	380C1F3 /	18806	4516	149505	18799	4657	-149649	37,605	9,173	-0,144
	Comp.con	5057	1306	39571	5055	1352	-39627	10,112	2,658	-0,056
3	GW / opgv	7859	2799	48604	7849	2944	-48822	15,708	5,743	-0,218
Wind+ice,	380C1F1 /	28281	9645	200273	28243	10103	-201058	56,524	19,748	-0,785
Permanen	380C1F2 /	28311	9263	199657	28277	9693	-200353	56,588	18,956	-0,696
Wind ang	380C1F3 /	28345	8802	198960	28316	9198	-199556	56,661	18	-0,596
	Comp.con	16110	4852	97045	16095	5085	-97331	32,205	9,937	-0,286
4	GW / opgv	2962	745	20924	2960	773	-20956	5,922	1,518	-0,032
Constructi	380C1F1 /	20720	4753	146180	20713	4915	-146336	41,433	9,668	-0,156
Permanen	380C1F2 /	20726	4618	146058	20719	4770	-146196	41,445	9,388	-0,138
Wind ang	380C1F3 /	20732	4455	145922	20727	4595	-146039	41,459	9,05	-0,117
	Comp.con	6176	1364	42852	6174	1409	-42893	12,35	2,773	-0,041
1a	GW / opgv	2037	4513	33184	2037	4513	-33184	4,074	9,026	0
Wind, 10	380C1F1 /	16080	26510	211673	16080	26510	-211673	32,16	53,02	0
Permanen	380C1F2 /	16182	25007	204535	16182	25007	-204535	32,364	50,014	0
Wind ang	380C1F3 /	16316	23193	195980	16316	23193	-195980	32,632	46,386	0
	Comp.con	4347	7411	59000	4347	7411	-59000	8,694	14,822	0
1b	GW / opgv	2366	1141	20349	2366	1141	-20349	4,732	2,282	0
Wind, -20	380C1F1 /	18580	7245	153961	18580	7245	-153961	37,16	14,49	0
Permanen	380C1F2 /	18610	6959	153341	18610	6959	-153341	37,22	13,918	0
Wind ang	380C1F3 /	18645	6615	152639	18645	6615	-152639	37,29	13,23	0
	Comp.con	5000	1987	40789	5000	1987	-40789	10	3,974	0
3	GW / opgv	7676	4967	53046	7676	4967	-53046	15,352	9,934	0
Wind+ice,	380C1F1 /	27576	16518	216454	27576	16518	-216454	55,152	33,036	0
Permanen	380C1F2 /	27669	15708	214117	27669	15708	-214117	55,338	31,416	0
Wind ang	380C1F3 /	27780	14733	211435	27780	14733	-211435	55,56	29,466	0
	Comp.con	15829	8341	103033	15829	8341	-103033	31,658	16,682	0
4	GW / opgv	2934	1163	21609	2934	1163	-21609	5,868	2,326	0
Constructi	380C1F1 /	20566	7171	149556	20566	7171	-149556	41,132	14,342	0
Permanen	380C1F2 /	20589	6887	149048	20589	6887	-149048	41,178	13,774	0
Wind ang	380C1F3 /	20615	6544	148472	20615	6544	-148472	41,23	13,088	0
	Comp.con	6137	2039	43734	6137	2039	-43734	12,274	4,078	0
1a	GW / opgv	2167	2438	23054	2181	2288	-22373	4,348	4,726	0,681
Wind, 10	380C1F1 /	17141	14554	157539	17238	13698	-154130	34,379	28,252	3,409
Permanen	380C1F2 /	17228	13788	154482	17320	12986	-151380	34,548	26,774	3,102
Wind ang	380C1F3 /	17334	12865	150925	17420	12128	-148191	34,754	24,993	2,734
	Comp.con	4634	4058	43329	4661	3818	-42337	9,295	7,876	0,992
1b	GW / opgv	2404	746	19444	2406	718	-19399	4,81	1,464	0,045
Wind, -20	380C1F1 /	18779	4978	150016	18789	4815	-149824	37,568	9,793	0,192
Permanen	380C1F2 /	18788	4832	149843	18797	4680	-149674	37,585	9,512	0,169
Wind ang	380C1F3 /	18799	4657	149649	18806	4516	-149505	37,605	9,173	0,144
	Comp.con	5055	1352	39627	5057	1306	-39571	10,112	2,658	0,056
3	GW / opgv	7849	2944	48822	7859	2799	-48604	15,708	5,743	0,218
Wind+ice,	380C1F1 /	28243	10103	201058	28281	9645	-200273	56,524	19,748	0,785
Permanen	380C1F2 /	28277	9693	200353	28311	9263	-199657	56,588	18,956	0,696
Wind ang	380C1F3 /	28316	9198	199556	28345	8802	-198960	56,661	18	0,596
	Comp.con	16095	5085	97331	16110	4852	-97045	32,205	9,937	0,286
4	GW / opgv	2960	773	20956	2962	745	-20924	5,922	1,518	0,032
Constructi	380C1F1 /	20713	4915	146336	20720	4753	-146180	41,433	9,668	0,156
Permanen	380C1F2 /	20719	4770	146196	20726	4618	-146058	41,445	9,388	0,138
Wind ang	380C1F3 /	20727	4595	146039	20732	4455	-145922	41,459	9,05	0,117
	Comp.con	6174	1409	42893	6176	1364	-42852	12,35	2,773	0,041

		Belastingen op mastvoet, per lijn					Belasting op mastvoet, belastinggeval					
		M_{langs}	M_{dwars}	N	V_{langs}	V_{dwars}		M_{langs}	M_{dwars}	N	V_{langs}	V_{dwars}
1a		0	60,72218	4,698	0	0,584	1a	0	1314,129	123,83	0	15,19
Wind angle: 0 dgr		0	421,882	36,422	0	4,466						
		0	377,222	36,422	0	4,466						
		0	382,5115	36,422	0	4,464						
		0	71,79125	9,866	0	1,21						
1b		0	67,1024	4,84	0	0,668	1b	0	1472,124	128,14	0	17,602
Wind angle: 0 dgr		0	469,8256	37,716	0	5,188						
		0	417,9456	37,716	0	5,188						
		0	437,819	37,716	0	5,188						
		0	79,43149	10,152	0	1,37						
3		0	182,8482	15,864	0	1,648	3	0	2208,273	219,582	0	25,41
Wind angle: 0 dgr		0	650,4212	57,098	0	6,814						
		0	582,1842	57,098	0	6,812						
		0	585,9226	57,098	0	6,812						
		0	206,8973	32,424	0	3,324						
4		0	75,79822	5,942	0	0,724	4	0	1508,094	142,94	0	17,422
Wind angle: 0 dgr		0	479,7864	41,54	0	5,07						
		0	429,0864	41,54	0	5,07						
		0	434,6917	41,54	0	5,07						
		0	88,73158	12,378	0	1,488						
1a		-46,6485	342,9057	4,348	-0,681	4,726	1a	-642,391	5860,334	117,324	-10,918	92,621
Wind angle: 45 dgr		-199,427	1804,353	34,379	-3,409	28,252						
		-150,447	1450,896	34,548	-3,102	26,774						
		-201,725	1894,79	34,754	-2,734	24,993						
		-44,144	367,3896	9,295	-0,992	7,876						
1b		-3,0825	121,4961	4,81	-0,045	1,464	1b	-35,6279	2355,504	127,68	-0,606	32,6
Wind angle: 45 dgr		-11,232	738,5654	37,568	-0,192	9,793						
		-8,1965	627,0819	37,585	-0,169	9,512						
		-10,6249	731,6863	37,605	-0,144	9,173						
		-2,492	136,6747	10,112	-0,056	2,658						
3		-14,933	462,6678	15,708	-0,218	5,743	3	-151,314	4947,673	217,686	-2,581	72,384
Wind angle: 45 dgr		-45,9225	1404,529	56,524	-0,785	19,748						
		-33,756	1168,919	56,588	-0,696	18,956						
		-43,9753	1410,78	56,661	-0,596	18						
		-12,727	500,7774	32,205	-0,286	9,937						
4		-2,192	130,099	5,922	-0,032	1,518	4	-28,4682	2390,584	142,609	-0,484	32,397
Wind angle: 45 dgr		-9,126	748,2975	41,433	-0,156	9,668						
		-6,693	638,0905	41,445	-0,138	9,388						
		-8,63273	728,2339	41,459	-0,117	9,05						
		-1,8245	145,8632	12,35	-0,041	2,773						
1a		0	636,2473	4,074	0	9,026	1a	0	10593,7	109,924	0	173,268
Wind angle: 90 dgr		0	3243,496	32,16	0	53,02						
		0	2568,404	32,364	0	50,014						
		0	3470,155	32,632	0	46,386						
		0	675,3934	8,694	0	14,822						
1b		0	177,1851	4,732	0	2,282	1b	0	3253,49	126,402	0	47,894
Wind angle: 90 dgr		0	1011,541	37,16	0	14,49						
		0	839,1632	37,22	0	13,918						
		0	1030,568	37,29	0	13,23						
		0	195,033	10	0	3,974						
3		0	748,1813	15,352	0	9,934	3	0	7746,841	213,06	0	120,534
Wind angle: 90 dgr		0	2175,826	55,152	0	33,036						
		0	1767,717	55,338	0	31,416						
		0	2255,181	55,56	0	29,466						
		0	799,9349	31,658	0	16,682						
4		0	185,2089	5,868	0	2,326	4	0	3284,879	141,682	0	47,608
Wind angle: 90 dgr		0	1020,399	41,132	0	14,342						
		0	849,634	41,178	0	13,774						
		0	1025,84	41,23	0	13,088						
		0	203,7974	12,274	0	4,078						
1a		46,6485	342,9057	4,348	0,681	4,726	1a	642,3915	5860,334	117,324	10,918	92,621
Wind angle: -45 dgr		199,4265	1804,353	34,379	3,409	28,252						
		150,447	1450,896	34,548	3,102	26,774						
		201,7255	1894,79	34,754	2,734	24,993						
		44,144	367,3896	9,295	0,992	7,876						
1b		3,0825	121,4961	4,81	0,045	1,464	1b	35,6279	2355,504	127,68	0,606	32,6
Wind angle: -45 dgr		11,232	738,5654	37,568	0,192	9,793						
		8,1965	627,0819	37,585	0,169	9,512						
		10,6249	731,6863	37,605	0,144	9,173						
		2,492	136,6747	10,112	0,056	2,658						
3		15,708	462,6678	15,708	0,218	5,743	3	151,3138	4947,673	217,686	2,581	72,384
Wind angle: -45 dgr		56,524	1404,529	56,524	0,785	19,748						
		56,588	1168,919	56,588	0,696	18,956						
		43,97526	1410,78	56,661	0,596	18						
		12,727	500,7774	32,205	0,286	9,937						
4		2,192	130,099	5,922	0,032	1,518	4	28,46823	2390,584	142,609	0,484	32,397
Wind angle: -45 dgr		9,126	748,2975	41,433	0,156	9,668						
		6,693	638,0905	41,445	0,138	9,388						
		8,632728	728,2339	41,459	0,117	9,05						
		1,8245	145,8632	12,35	0,041	2,773						

W4S400Z+ 24 - AB

Hoogte mast	Ber & bijlage	67 m			
Hoogte onderste stroomdraad (F3)		41 m			
		Hoogte		Excentriciteit ophanging t.o.v. hart mast	
Bliksemdraad = GW / tH_{max} -	0,716 m =	66,284 m		1,459 m	
1e traverse - 380C1F1 F2 +	8,5 m =	58 m		4,737 m	
1e traverse - 150C1F1		58		-3,358 m	
2e traverse - 380C1F2 F3 +	8,5 m =	49,5 m		4,737 m	
2e traverse - 150C1F2 F3 +		49,5 m		-3,358 m	
3e traverse - 380C1F3		41 m		4,737 m	
3e traverse - 150C1F3		41		-3,358 m	
Passieve lijn = Comp C F3 -	7,5 m =	33,5 m		1,886 m	

Uit mast (excl belastingsfactoren)			Uit lijnen (incl belastingsfactoren)					
N	V	M	Nmin	Nmax	Vmax	Mlangs;ma	Mdwars;max	
[kN]	[kN]	[kNm]	[kN]	[kN]	[kN]	[kNm]	[kNm]	
592	136	4319	118	352	249	0	13998	

			Belastingen uit lijnen						Belasting uit mast		
				M_{langs}	M_{dwars}	N	V_{langs}	V_{dwars}	N	V	M
Perm load 1,2	0 deg	1a		0	443	185	0	0	592	136	4319
		1b		0	457	191	0	0	592	26	810
			3	0	897	352	0	0	592	38	1215
			4	0	529	219	0	0	592	26	810
			6	0	495	207	0	0			
	45 deg	1a		0	7217	172	0	125	592	136	4319
		1b		0	1815	190	0	25	592	26	810
			3	0	4934	349	0	76	592	38	1215
			4	0	1888	219	0	25	592	26	810
	90 deg	1a		0	13998	160	0	249	592	136	4319
		1b		0	3169	187	0	50	592	26	810
			3	0	7287	275	0	121	592	38	1215
		Constructi		0	3120	215	0	53	592	26	810
	-45 deg	Wind, 10 d		0	6495	173	0	120	592	136	4319
		Wind, -20		0	1788	207	0	30	592	26	810
		Wind+ice,		0	4400	334	0	71	592	38	1215
		Constructi		0	1675	215	0	24	592	26	810
	0 deg	Wind, 10 d		0	284	140	0	0	592	136	4319
		Wind, -20		0	240	163	0	0	592	26	810
		Wind+ice,		0	678	294	0	0	592	38	1215
		Constructi		0	362	173	0	0	592	26	810
		Permanent		0	519	140	0	6			
	45 deg	Wind, 10 d		0	6402	127	0	120	592	136	4319
		Wind, -20		0	1695	161	0	30	592	26	810
		Wind+ice,		0	4311	290	0	71	592	38	1215
		Constructi		0	2047	172	0	35	592	26	810
	90 deg	Wind, 10 d		0	12534	118	0	240	592	136	4319
		Wind, -20		0	3148	158	0	59	592	26	810
		Wind+ice,		0	7935	282	0	143	592	38	1215
		Constructi		0	3029	170	0	53	592	26	810
	-45 deg	Wind, 10 d		**0**	**6402**	**127**	**0**	**120**	592	136	4319
		Wind, -20		**0**	1695	161	**0**	30	592	26	810
		Wind+ice,		**0**	4311	**290**	**0**	71	592	38	1215
		Constructi		**0**	**1595**	168	**0**	**24**	592	26	810

regel			Loadcase	Totaal M_{langs}	M_{dwars}	N	V_{langs}	V_{dwars}	Totaal moment								
1	Perm load 1,2	0 deg	1a	4319	443	777	136	0	4341,625	1	x		x				
2	Perm load 1,2	0 deg	1b	810	457	783	26	0	930,0558	2							
3	Perm load 1,2	0 deg	3	1215	897	944	38	0	1510,069	3		x					
4	Perm load 1,2	0 deg	4	810	529	811	26	0	967,3096	4							
5	Perm load 1,2	0 deg	6							5							
6										6							
7	Perm load 1,2	45 deg	1a	3054	10271	764	96	221	10715,24	7							
8	Perm load 1,2	45 deg	1b	573	2387	782	18	43	2455,145	8							
9	Perm load 1,2	45 deg	3	859	5793	941	27	103	5856,205	9							
10	Perm load 1,2	45 deg	4	573	2460	811	18	43	2526,189	10							
11										11							
12	Perm load 1,2	90 deg	1a	0	18317	752	0	385	18316,89	12	x		x	x			
13	Perm load 1,2	90 deg	1b	0	3978	779	0	75	3978,454	13							
14	Perm load 1,2	90 deg	3	0	8501	867	0	159	8501,481	14							
15	Perm load 1,2	90 deg	4 Construct	0	3930	807	0	79	3930,092	15							
16										16							
17	Perm load 1,2	-45 deg	1a	3054	9549	765	96	216	10025,76	17							
18	Perm load 1,2	-45 deg	1b	573	2361	799	18	48	2429,119	18							
19	Perm load 1,2	-45 deg	3	859	5259	926	27	98	5328,983	19							
20	Perm load 1,2	-45 deg	4	573	2247	807	18	42	2319,174	20							
21										21							
22	Perm load 0,9	0 deg	1a	4319	284	732	136	0	4328,355	22	x		x				
23	Perm load 0,9	0 deg	1b	810	240	755	26	0	844,5751	23							
24	Perm load 0,9	0 deg	3	1215	678	886	38	0	1391,347	24							
25	Perm load 0,9	0 deg	4	810	362	765	26	0	887,1458	25							
26	Perm load 0,9	0 deg	6							26							
27										27							
28	Perm load 0,9	45 deg	1a	3054	9456	719	96	216	9936,624	28							
29	Perm load 0,9	45 deg	1b	573	2268	753	18	48	2339,088	29							
30	Perm load 0,9	45 deg	3	859	5170	882	27	98	5241,131	30							
31	Perm load 0,9	45 deg	4 Construct	573	2620	764	18	53	2681,682	31							
32										32							
33	Perm load 0,9	90 deg	1a	0	16853	710	0	376	16853,5	33							
34	Perm load 0,9	90 deg	1b	0	3958	750	0	85	3957,684	34							
35	Perm load 0,9	90 deg	3	0	9150	874	0	181	9149,699	35							
36	Perm load 0,9	90 deg	4	0	3839	762	0	79	3838,727	36							
37										37							
38	Perm load 0,9	-45 deg	1a	3054	9456	719	96	216	9936,624	38							
39	Perm load 0,9	-45 deg	1b	573	2268	753	18	48	2339,088	39							
40	Perm load 0,9	-45 deg	3	859	5170	882	27	98	5241,131	40							
41	Perm load 0,9	-45 deg	4	573	2167	760	18	42	2241,859	41							
			Max	4319	18317	944	136	385	18317								

samenvatting

	Mast	Bijlage		Wind	Loadcase	M_{langs}	M_{dwars}	N	V_{langs}	V_{dwars}
1	W4S400Z+	24-AB	Perm load	0 deg	1a	4319	443	777	136	0
3	W4S400Z+	24-AB	Perm load	0 deg	3	1215	897	944	38	0
12	W4S400Z+	24-AB	Perm load	90 deg	1a	0	18317	752	0	385
22	W4S400Z+	24-AB	Perm load	0 deg	1a	4319	284	732	136	0

W4S400Z+14 TOWER (rev 8.0, date: 23 Appendix AB
Loadcases for tower strength (ultimate limit state)
-

Loadcase according to 50341-3-15

		AHEAD [N]	[N]	[N]	BACK [N]	[N]	[N]	Totaal Vert [kN]	Dwars [kN]	Langs [kN]
	Attachment point									
1a	GW / opgv.2909	0	19396	2909	0	-19396		5,818	0	0
Wind, 10	380C1F1 22255	0	147925	22255	0	-147925		44,51	0	0
Permanen	380C1F2 22255	0	147925	22255	0	-147925		44,51	0	0
Wind angl	380C1F3 22255	0	147925	22255	0	-147925		44,51	0	0
	Comp. gl 6033	0	40193	6033	0	-40193		12,066	0	0
	150C1F1 5564	0	36981	5564	0	-36981		11,128	0	0
	150C1F2 5564	0	36981	5564	0	-36981		11,128	0	0
	150C1F3 5564	0	36981	5564	0	-36981		11,128	0	0
1b	GW / opgv.2999	0	21992	2999	0	-21992		5,998	0	0
Wind, -20	380C1F1 23014	0	169938	23014	0	-169938		46,028	0	0
Permanen	380C1F2 23014	0	169938	23014	0	-169938		46,028	0	0
Wind angl	380C1F3 23014	0	169938	23014	0	-169938		46,028	0	0
	Comp. gl 6203	0	45121	6203	0	-45121		12,406	0	0
	150C1F1 5753	0	42485	5753	0	-42485		11,506	0	0
	150C1F2 5753	0	42485	5753	0	-42485		11,506	0	0
	150C1F3 5753	0	42485	5753	0	-42485		11,506	0	0
3	GW / opgv.11395	0	60830	11395	0	-60830		22,79	0	0
Wind+ice,	380C1F1 37797	0	238900	37797	0	-238900		75,594	0	0
Permanen	380C1F2 37797	0	238900	37797	0	-238900		75,594	0	0
Wind angl	380C1F3 37797	0	238900	37797	0	-238900		75,594	0	0
	Comp. gl 23012	0	122608	23012	0	-122608		46,024	0	0
	150C1F1 9449	0	59725	9449	0	-59725		18,898	0	0
	150C1F2 9449	0	59725	9449	0	-59725		18,898	0	0
	150C1F3 9449	0	59725	9449	0	-59725		18,898	0	0
4	GW / opgv.3860	0	25031	3860	0	-25031		7,72	0	0
Constructi	380C1F1 26107	0	171855	26107	0	-171855		52,214	0	0
Permanen	380C1F2 26107	0	171855	26107	0	-171855		52,214	0	0
Wind angl	380C1F3 26107	0	171855	26107	0	-171855		52,214	0	0
	Comp. gl 7931	0	51355	7931	0	-51355		15,862	0	0
	150C1F1 6527	0	42964	6527	0	-42964		13,054	0	0
	150C1F2 6527	0	42964	6527	0	-42964		13,054	0	0
	150C1F3 6527	0	42964	6527	0	-42964		13,054	0	0
6	GW / opgv.3258	0	21373	3258	0	-21373		6,516	0	0
Permanen	380C1F1 24906	0	162593	24906	0	-162593		49,812	0	0
Permanen	380C1F2 24906	0	162593	24906	0	-162593		49,812	0	0
	380C1F3 24906	0	162593	24906	0	-162593		49,812	0	0
	Comp. gl 6754	0	44263	6754	0	-44263		13,508	0	0
	150C1F1 6227	0	40648	6227	0	-40648		12,454	0	0
	150C1F2 6227	0	40648	6227	0	-40648		12,454	0	0
	150C1F3 6227	0	40648	6227	0	-40648		12,454	0	0
1a	GW / opgv.2614	2829	28651	2614	2829	-28651		5,228	5,658	0
Wind, 10	380C1F1 20627	15922	189890	20627	15922	-189890		41,254	31,844	0
Permanen	380C1F2 20764	14850	185271	20764	14850	-185271		41,528	29,7	0
Wind angl	380C1F3 20936	13544	179843	20936	13544	-179843		41,872	27,088	0
	Comp. gl 5628	4053	50697	5628	4053	-50697		11,256	8,106	0
	150C1F1 5157	3981	47472	5157	3981	-47472		10,314	7,962	0
	150C1F2 5191	3712	46318	5191	3712	-46318		10,382	7,424	0
	150C1F3 5234	3386	44961	5234	3386	-44961		10,468	6,772	0
1b	GW / opgv.2969	565	22526	2969	565	-22526		5,938	1,13	0
Wind, -20	380C1F1 22886	3182	172088	22886	3182	-172088		45,772	6,364	0
Permanen	380C1F2 22902	2968	171811	22902	2968	-171811		45,804	5,936	0
Wind angl	380C1F3 22921	2707	171498	22921	2707	-171498		45,842	5,414	0
	Comp. gl 6173	810	45649	6173	810	-45649		12,346	1,62	0
	150C1F1 5721	795	43022	5721	795	-43022		11,442	1,59	0
	150C1F2 5726	742	42953	5726	742	-42953		11,452	1,484	0
	150C1F3 5730	677	42875	5730	677	-42875		11,46	1,354	0
3	GW / opgv.11271	2909	62956	11271	2909	-62956		22,542	5,818	0
Wind+ice,	380C1F1 37349	8894	246836	37349	8894	-246836		74,698	17,788	0
Permanen	380C1F2 37404	8296	245829	37404	8296	-245829		74,808	16,592	0
Wind angl	380C1F3 37467	7566	244688	37467	7566	-244688		74,934	15,132	0
	Comp. gl 22882	4158	124784	22882	4158	-124784		45,764	8,316	0
	150C1F1 9337	2224	61709	9337	2224	-61709		18,674	4,448	0
	150C1F2 9351	2074	61457	9351	2074	-61457		18,702	4,148	0
	150C1F3 9367	1892	61172	9367	1892	-61172		18,734	3,784	0
4	GW / opgv.3842	566	25389	3842	566	-25389		7,684	1,132	0
Constructi	380C1F1 26017	3184	173545	26017	3184	-173545		52,034	6,368	0
Permanen	380C1F2 26028	2969	173326	26028	2969	-173326		52,056	5,938	0
Wind angl	380C1F3 26041	2708	173080	26041	2708	-173080		52,082	5,416	0
	Comp. gl 7912	810	51712	7912	810	-51712		15,824	1,62	0
	150C1F1 6504	796	43386	6504	796	-43386		13,008	1,592	0
	150C1F2 6507	742	43332	6507	742	-43332		13,014	1,484	0
	150C1F3 6510	677	43270	6510	677	-43270		13,02	1,354	0
1a	GW / opgv.2434	5663	43132	2434	5663	-43132		4,868	11,326	0
Wind, 10	380C1F1 19159	31862	266386	19159	31862	-266386		38,318	63,724	0
Permanen	380C1F2 19299	29715	255761	19299	29715	-255761		38,598	59,43	0
Wind angl	380C1F3 19491	27100	242841	19491	27100	-242841		38,982	54,2	0
	Comp. gl 5232	8109	70532	5232	8109	-70532		10,464	16,218	0
	150C1F1 4790	7965	66597	4790	7965	-66597		9,58	15,93	0
	150C1F2 4825	7429	63940	4825	7429	-63940		9,65	14,858	0
	150C1F3 4873	6775	60710	4873	6775	-60710		9,746	13,55	0
1b	GW / opgv.2897	1131	24011	2897	1131	-24011		5,794	2,262	0
Wind, -20	380C1F1 22541	6364	178262	22541	6364	-178262		45,082	12,728	0
Permanen	380C1F2 22597	5936	177218	22597	5936	-177218		45,194	11,872	0
Wind angl	380C1F3 22662	5414	176032	22662	5414	-176032		45,324	10,828	0
	Comp. gl 6093	1620	47172	6093	1620	-47172		12,186	3,24	0
	150C1F1 5635	1591	44565	5635	1591	-44565		11,27	3,182	0
	150C1F2 5649	1484	44305	5649	1484	-44305		11,298	2,968	0
	150C1F3 5665	1353	44008	5665	1353	-44008		11,33	2,706	0
3	GW / opgv.10988	5819	68659	10988	5819	-68659		21,976	11,638	0
Wind+ice,	380C1F1 36307	17792	268286	36307	17792	-268286		72,614	35,584	0
Wind angl	380C1F3 36648	15134	260745	36648	15134	-260745		73,296	30,268	0
	Comp. gl 22546	8317	130929	22546	8317	-130929		45,092	16,634	0
	150C1F1 9077	4448	67071	9077	4448	-67071		18,154	8,896	0
	150C1F2 9116	4148	66196	9116	4148	-66196		18,232	8,296	0
	150C1F3 9162	3784	65186	9162	3784	-65186		18,324	7,568	0
4	GW / opgv.3792	1132	26416	3792	1132	-26416		7,584	2,264	0
Constructi	380C1F1 25766	6368	178458	25766	6368	-178458		51,532	12,736	0
Permanen	380C1F2 25807	5939	177621	25807	5939	-177621		51,614	11,878	0
Wind angl	380C1F3 25855	5417	176674	25855	5417	-176674		51,71	10,834	0
	Comp. gl 7859	1621	52758	7859	1621	-52758		15,718	3,242	0
	150C1F1 6441	1592	44614	6441	1592	-44614		12,882	3,184	0
	150C1F2 6452	1485	44405	6452	1485	-44405		12,904	2,97	0

Belastingen op mastvoet, per lijn

	M_{langs}	M_{dwars}	N	V_{langs}	V_{dwars}
	0	10,97275	5,818	0	0
	0	64,94009	44,51	0	0
	0	210,8439	44,51	0	0
	0	210,8439	44,51	0	0
	0	57,15664	12,066	0	0
	0	-37,3678	11,128	0	0
	0	-37,3678	11,128	0	0
	0	-37,3678	11,128	0	0
	0	11,31223	5,998	0	0
	0	67,15485	46,028	0	0
	0	218,0346	46,028	0	0
	0	218,0346	46,028	0	0
	0	58,76722	12,406	0	0
	0	-38,6371	11,506	0	0
	0	-38,6371	11,506	0	0
	0	-38,6371	11,506	0	0
	0	42,98194	22,79	0	0
	0	110,2916	75,594	0	0
	0	358,0888	75,594	0	0
	0	358,0888	75,594	0	0
	0	218,0157	46,024	0	0
	0	-63,4595	18,898	0	0
	0	-63,4595	18,898	0	0
	0	-63,4595	18,898	0	0
	0	14,55992	7,72	0	0
	0	76,18023	52,214	0	0
	0	247,3377	52,214	0	0
	0	247,3377	52,214	0	0
	0	75,13829	15,862	0	0
	0	-43,8353	13,054	0	0
	0	-43,8353	13,054	0	0
	0	-43,8353	13,054	0	0
	0	12,28918	6,516	0	0
	0	72,67571	49,812	0	0
	0	235,9594	49,812	0	0
	0	235,9594	49,812	0	0
	0	63,9874	13,508	0	0
	0	-41,8205	12,454	0	0
	0	-41,8205	12,454	0	0
	0	-41,8205	12,454	0	0
	0	199,403	5,228	0	5,658
	0	2170,937	41,254	0	31,844
	0	1919,318	41,528	0	29,7
	0	1539,204	41,872	0	27,088
	0	385,6657	11,256	0	8,106
	0	427,1616	10,314	0	7,962
	0	332,6252	10,382	0	7,424
	0	242,5005	10,468	0	6,772
	0	49,05407	5,938	0	1,13
	0	488,6127	45,772	0	6,364
	0	561,2615	45,804	0	5,936
	0	485,1466	45,842	0	5,414
	0	124,903	12,346	0	1,62
	0	53,79776	11,442	0	1,59
	0	35,00218	11,452	0	1,484
	0	17,03132	11,46	0	1,354
	0	237,4172	22,542	0	5,818
	0	1288,044	74,698	0	17,788
	0	1316,701	74,808	0	16,592
	0	1103,996	74,934	0	15,132
	0	557,7401	45,764	0	8,316
	0	195,2767	18,674	0	4,448
	0	142,5247	18,702	0	4,148
	0	92,23523	18,734	0	3,784
	0	52,41402	7,684	0	1,132
	0	498,0141	52,034	0	6,368
	0	590,9933	52,056	0	5,938
	0	514,8044	52,082	0	5,416
	0	141,3783	15,824	0	1,62
	0	48,65514	13,008	0	1,592
	0	29,75699	13,014	0	1,484
	0	11,79284	13,02	0	1,354
	0	388,602	4,868	0	11,326
	0	4279,788	38,318	0	63,724
	0	3629,779	38,598	0	59,43
	0	2867,558	38,982	0	54,2
	0	714,506	10,464	0	16,218
	0	891,7704	9,58	0	15,93
	0	703,0663	9,65	0	14,858
	0	522,8229	9,746	0	13,55
	0	86,70448	5,794	0	2,262
	0	909,4374	45,082	0	12,728
	0	902,66	45,194	0	11,872
	0	750,6858	45,324	0	10,828
	0	190,5651	12,186	0	3,24
	0	146,7113	11,27	0	3,182
	0	108,9773	11,298	0	2,968
	0	72,89986	11,33	0	2,706
	0	431,3197	21,976	0	11,638
	0	2464,594	72,614	0	35,584
	0	2102,747	73,296	0	30,268
	0	1036,984	45,092	0	16,634
	0	450,7315	18,154	0	8,896
	0	419,9449	18,232	0	8,296
	0	313,084	18,324	0	7,568
	0	67,35693	7,584	0	2,264
	0	523,8454	51,532	0	12,736
	0	862,6262	51,614	0	11,878
	0	873,3223	51,71	0	10,834
	0	234,9352	15,718	0	3,242
	0	191,566	12,882	0	3,184
	0	128,9284	12,904	0	2,97

Belasting op mastvoet, belastinggeval

		M_{langs}	M_{dwars}	N	V_{langs}	V_{dwars}
1a	0	442,6537	184,798		0	0
Wind angle: 0 dgr						
1b	0	457,3921	191,006		0	0
Wind angle: 0 dgr						
3	0	897,0884	352,29		0	0
Wind angle: 0 dgr						
4	0	529,0479	219,386		0	0
Wind angle: 0 dgr						
6	0	495,4096	206,822		0	0
0						
1a	0	7216,815	172,302		0	124,554
Wind angle: 45 dgr						
1b	0	1814,809	190,056		0	24,892
Wind angle: 45 dgr						
3	0	4933,936	348,856		0	76,026
Wind angle: 45 dgr						
4	0	1887,809	218,722		0	24,904
Wind angle: 45 dgr						
1a	0	13997,89	160,206		0	249,236
Wind angle: 90 dgr						
1b	0	3168,641	187,478		0	49,786
Wind angle: 90 dgr						
3	0	7286,762	275,272		0	121,148
0						
Constructi	0	3120,28	214,516		0	53,21
0						

	150C1F3	6464	1354	44168	6464	1354	-44168	12,928	2,708	0	0	90,63378	12,928	0	2,708								
1a	GW / opg	2614	2829	28651	2614	2829	-28651	5,228	5,658	0	0	214,4224	5,228	0	5,658								
Wind, 10	380C1F1	20627	15922	189890	20627	15922	-189890	41,254	31,844	0	0	1144,579	41,254	0	31,844	Wind, 10 d	0	6495,303	173,012	0	120,026		
Permaner	380C1F2	20764	14850	185271	20764	14850	-185271	41,528	29,7	0	0	2029,224	41,528	0	29,7	0							
Wind ang	380C1F3	20936	13544	179843	20936	13544	-179843	41,872	27,088	0	0	1769,452	41,872	0	27,088								
	Comp. gl	5628	4053	50697	5628	4053	-50697	11,256	8,106	0	0	454,5667	11,256	0	8,106								
	150C1F1	5157	3981	47472	5157	3981	-47472	10,314	7,962	0	0	375,2994	10,314	0	7,962								
	150C1F2	5191	3712	46318	5191	3712	-46318	10,382	7,424	0	0	395,7292	10,382	0	7,424								
	150C1F3	5234	3386	44961	5234	3386	-44961	10,468	6,772	0	0	300,0625	10,468	0	6,772								
1b	GW / opg	2969	565	22526	2969	565	-22526	5,938	1,13	0	0	26,3902	5,938	0	1,13								
Wind, -20	380C1F1	22886	3182	172088	22886	3182	-172088	45,772	6,364	0	0	299,52	45,772	0	6,364	Wind, -20 (	0	1788,038	206,66	0	29,58		
Permaner	380C1F2	22902	2968	171811	22902	2968	-171811	45,804	5,936	0	0	460,2899	45,804	0	5,936	0							
Wind ang	380C1F3	22921	2707	171498	22921	2707	-171498	45,842	5,414	0	0	531,1656	45,842	0	5,414								
	Comp. gl	6173	810	45649	6173	810	-45649	12,346	1,62	0	0	138,673	12,346	0	1,62								
	150C1F1	5721	795	43022	5721	795	-43022	11,442	1,59	0	0	119,3908	11,442	0	1,59								
	150C1F2	5726	742	42953	5726	742	-42953	11,452	1,484	0	0	47,61618	11,452	0	1,484								
	150C1F3	5730	677	42875	5730	677	-42875	11,46	1,354	0	0	28,54032	11,46	0	1,354								
3	GW / opg	11271	2909	62956	11271	2909	-62956	22,542	5,818	0	0	162,842	22,542	0	5,818								
Wind+ice,	380C1F1	37349	8894	246836	37349	8894	-246836	74,698	17,788	0	0	736,7784	74,698	0	17,788	Wind+ice, -	0	4400,37	333,998	0	71,34		
Permaner	380C1F2	37404	8296	245829	37404	8296	-245829	74,808	16,592	0	0	1208,929	74,808	0	16,592	0							
Wind ang	380C1F3	37467	7566	244688	37467	7566	-244688	74,934	15,132	0	0	1232,618	74,934	0	15,132								
0	Comp. gl	22882	4158	124784	22882	4158	-124784	45,764	8,316	0	0	628,4261	45,764	0	8,316								
	150C1F1	9337	2224	61709	9337	2224	-61709	18,674	4,448	0	0	270,8267	18,674	0	4,448								
	150C1F2	9351	2074	61457	9351	2074	-61457	18,702	4,148	0	0	177,7827	18,702	0	4,148								
	150C1F3	9367	1892	61172	9367	1892	-61172	18,734	3,784	0	0	124,3992	18,734	0	3,784								
4	GW / opg	3842	566	25389	3842	566	-25389	7,684	1,132	0	0	20,60913	7,684	0	1,132								
Constructi	380C1F1	26017	3184	173545	26017	3184	-173545	52,034	6,368	0	0	311,4641	52,034	0	6,368	Constructi	0	1674,745	215,45	0	23,772		
Permaner	380C1F2	26028	2969	173326	26028	2969	-173326	52,056	5,938	0	0	469,5441	52,056	0	5,938	0							
Wind ang	380C1F3	26041	2708	173080	26041	2708	-173080	52,082	5,416	0	0	560,8404	52,082	0	5,416								
	Comp. gl	7912	810	51712	7912	810	-51712	15,824	1,62	0	0	155,1483	15,824	0	1,62								
	150C1F1	6504	796	43386	6504	796	-43386	13,008	1,592	0	0	126,8909	13,008	0	1,592								
	150C1F2	6507	742	43332	6507	742	-43332	13,014	1,484	0	0	42,37099	13,014	0	1,484								
	150C1F3	6510	677	43270	6510	677	-43270	13,02	1,354	0	0	23,30184	13,02	0	1,354								
1a	GW / opg	2206	0	15241	2206	0	-15241	4,412	0	0	0	-14,8155	4,412	0	0								
Wind, 10	380C1F1	16899	0	116969	16899	0	-116969	33,798	0	0	0	63,74303	33,798	0	0	Wind, 10 d	0	284,4264	140,47	0	0		
Permaner	380C1F2	16899	0	116969	16899	0	-116969	33,798	0	0	0	49,31128	33,798	0	0	0							
Wind ang	380C1F3	16899	0	116969	16899	0	-116969	33,798	0	0	0	160,1011	33,798	0	0								
	Comp. gl	4576	0	31630	4576	0	-31630	9,152	0	0	0	43,35302	9,152	0	0								
	150C1F1	4225	0	29242	4225	0	-29242	8,45	0	0	0	40,02765	8,45	0	0								
	150C1F2	4225	0	29242	4225	0	-29242	8,45	0	0	0	-28,3751	8,45	0	0								
	150C1F3	4225	0	29242	4225	0	-29242	8,45	0	0	0	-28,3751	8,45	0	0								
1b	GW / opg	2287	0	17593	2287	0	-17593	4,574	0	0	0	-15,3595	4,574	0	0								
Wind, -20	380C1F1	17604	0	137380	17604	0	-137380	35,208	0	0	0	66,40229	35,208	0	0	Wind, -20 (	0	239,8141	162,97	0	0		
Permaner	380C1F2	17604	0	137380	17604	0	-137380	35,208	0	0	0	51,36847	35,208	0	0	0							
Wind ang	380C1F3	17604	0	137380	17604	0	-137380	35,208	0	0	0	166,7803	35,208	0	0								
	Comp. gl	4730	0	36108	4730	0	-36108	9,46	0	0	0	44,81202	9,46	0	0								
	150C1F1	4401	0	34345	4401	0	-34345	8,802	0	0	0	41,69507	8,802	0	0								
	150C1F2	4401	0	34345	4401	0	-34345	8,802	0	0	0	-29,5571	8,802	0	0								
	150C1F3	4401	0	34345	4401	0	-34345	8,802	0	0	0	-29,5571	8,802	0	0								
3	GW / opg	10740	0	58130	10740	0	-58130	21,48	0	0	0	-72,1298	21,48	0	0								
Wind+ice,	380C1F1	32592	0	212406	32592	0	-212406	65,184	0	0	0	122,937	65,184	0	0	Wind+ice, -	0	678,4572	294,084	0	0		
Permaner	380C1F2	32592	0	212406	32592	0	-212406	65,184	0	0	0	95,10346	65,184	0	0	0							
Wind ang	380C1F3	32592	0	212406	32592	0	-212406	65,184	0	0	0	308,7766	65,184	0	0								
	Comp. gl	21655	0	117028	21655	0	-117028	43,31	0	0	0	205,1595	43,31	0	0								
	150C1F1	8148	0	53101	8148	0	-53101	16,296	0	0	0	77,19415	16,296	0	0								
	150C1F2	8148	0	53101	8148	0	-53101	16,296	0	0	0	-54,722	16,296	0	0								
	150C1F3	8148	0	53101	8148	0	-53101	16,296	0	0	0	-54,722	16,296	0	0								
4	GW / opg	3167	0	21182	3167	0	-21182	6,334	0	0	0	-21,2696	6,334	0	0								
Constructi	380C1F1	20794	0	142171	20794	0	-142171	41,588	0	0	0	78,43497	41,588	0	0	Constructi	0	362,2587	173,354	0	0		
Permaner	380C1F2	20794	0	142171	20794	0	-142171	41,588	0	0	0	60,67689	41,588	0	0	0							
Wind ang	380C1F3	20794	0	142171	20794	0	-142171	41,588	0	0	0	197,0024	41,588	0	0								
	Comp. gl	6495	0	43419	6495	0	-43419	12,99	0	0	0	61,53363	12,99	0	0								
	150C1F1	5198	0	35543	5198	0	-35543	10,396	0	0	0	49,24585	10,396	0	0								
	150C1F2	5198	0	35543	5198	0	-35543	10,396	0	0	0	-34,9098	10,396	0	0								
	150C1F3	5198	0	35543	5198	0	-35543	10,396	0	0	0	-34,9098	10,396	0	0								
6	GW / opg	2206	0	15241	2206	0	-15241	4,412	0	0	0	-14,8155	4,412	0	0								
Permaner	380C1F1	16899	0	116969	16899	0	-116969	33,798	0	0	0	63,74303	33,798	0	0	Permanent	0	518,9162	139,722	0	5,658		
Permaner	380C1F2	16899	0	116969	16899	0	-116969	33,798	0	0	0	49,31128	33,798	0	0	0							
	380C1F3	16899	0	116969	16899	0	-116969	33,798	0	0	0	160,1011	33,798	0	0								
	Comp. gl	4576	0	31630	4576	0	-31630	9,152	0	0	0	43,35302	9,152	0	0								
	150C1F1	4225	0	29242	4225	0	-29242	8,45	0	0	0	40,02765	8,45	0	0								
	150C1F2	4225	0	29242	4225	0	-29242	8,45	0	0	0	-28,3751	8,45	0	0								
	150C1F3	4225	0	29242	4225	0	-29242	8,45	0	0	0	-28,3751	8,45	0	0								
1a	GW / opg	1913	2829	26629	1913	2829	-26629	3,826	5,658	0	0	219,1303	3,826	0	5,658								
Wind, 10	380C1F1	15149	15920	170919	15149	15920	-170919	30,298	31,84	0	0	1123,782	30,298	0	31,84	Wind, 10 d	0	6401,671	127,368	0	120,008		
Permaner	380C1F2	15268	14848	165403	15268	14848	-165403	30,536	29,696	0	0	2012,922	30,536	0	29,696	0							
Wind ang	380C1F3	15423	13542	158827	15423	13542	-158827	30,846	27,084	0	0	1716,99	30,846	0	27,084								
	Comp. gl	4136	4052	45200	4136	4052	-45200	8,272	8,104	0	0	440,3325	8,272	0	8,104								
	150C1F1	3787	3980	42730	3787	3980	-42730	7,574	7,96	0	0	362,238	7,574	0	7,96								
	150C1F2	3817	3712	41351	3817	3712	-41351	7,634	7,424	0	0	404,957	7,634	0	7,424								
	150C1F3	3856	3385	39707	3856	3385	-39707	7,712	6,77	0	0	309,2181	7,712	0	6,77								
1b	GW / opg	2248	565	18357	2248	565	-18357	4,496	1,13	0	0	31,23243	4,496	0	1,13								
Wind, -20	380C1F1	17425	3181	140493	17425	3181	-140493	34,85	6,362	0	0	278,8541	34,85	0	6,362	Wind, -20 (	0	1695,291	161,46	0	29,572		
Permaner	380C1F2	17448	2967	140095	17448	2967	-140095	34,896	5,934	0	0	444,2425	34,896	0	5,934	0							
Wind ang	380C1F3	17473	2706	139645	17473	2706	-139645	34,946	5,412	0	0	479,4352	34,946	0	5,412								
	Comp. gl	4690	810	36869	4690	810	-36869	9,38	1,62	0	0	124,6231	9,38	0	1,62								
	150C1F1	4356	795	35123	4356	795	-35123	8,712	1,59	0	0	106,4587	8,712	0	1,59								
	150C1F2	4362	742	35024	4362	742	-35024	8,724	1,484	0	0	56,77681	8,724	0	1,484								
	150C1F3	4368	677	34911	4368	677	-34911	8,736	1,354	0	0	37,68751	8,736	0	1,354								
3	GW / opg	10608	2908	60429	10608	2908	-60429	21,216	5,816	0	0	167,2127	21,216	0	5,816								
Wind+ice,	380C1F1	32064	8893	222056	32064	8893	-222056	64,128	17,786	0	0	716,7764	64,128	0	17,786	Wind+ice, -	0	4311,334	290,296	0	71,326		
Permaner	380C1F2	32127	8294	220842	32127	8294	-220842	64,254	16,588	0	0	1193,266	64,254	0	16,588	0							
Wind ang	380C1F3	32200	7565	219463	32200	7565	-219463	64,4	15,13	0	0	1182,603	64,4	0	15,13								
	Comp. gl	21515	4157	119390	21515	4157	-119390	43,03	8,314	0	0	615,3761	43,03	0	8,314								
	150C1F1	8016	2223	55514	8016	2223	-55514	16,032	4,446	0	0	258,2296	16,032	0	4,446								
	150C1F2	8032	2074	55210	8032	2074	-55210	16,064	4,148	0	0	186,6411	16,064	0	4,148								
	150C1F3	8050	1891	54866	8050	1891	-54866	16,1	3,782	0	0	133,1452	16,1	0	3,782								
4	GW / opg	3144	566	21644	3144	566	-21644	6,288	1,132	0	0	25,2969	6,288	0	1,132								
Constructi	380C1F1	20676	3183	144456	20676	3183	-144456	41,352	6,366	0	0	291,2509	41,352	0	6,366	Constructi	0	2047,208	171,714	0	35,096		
Permaner	380C1F2	20691	2969	144162	20691	2969	-144162	41,382	5,938	0	0	453,9707	41,382	0	5,938	0							
Wind ang	380C1F3	20708	2708	143831	20708	2708	-143831	41,416	5,416	0	0	510,3156	41,416	0	5,416								
	Comp. gl	6472	810	43883	6472	810	-43883	12,944	1,62	0	0	141,5057	12,944	0	1,62								
	150C1F1	5169	796	36114	5169	796	-36114	10,338	1,592	0	0	114,2431	10,338	0	1,592								
	150C1F2	5173	742	36041	5173	742	-36041	10,346	1,484	0	0	51,33013	10,346	0	1,484								
	150C1F3	5177	677	35958	5177	677	-35958	10,354	1,354	0	0	32,25427	10,354	0	1,354								
1a	GW / opg	1791	5663	42144	1791	5663	-42144	3,582	11,326	0	0	452,3376	3,582	0	11,326								
Wind, 10	380C1F1	14053	31860	256157	14053	31860	-256157	28,106	63,72	0	0	2187,628	28,106	0	63,72	Wind, 10 d	0	12534,5	118,184	0	240,15		
Permaner	380C1F2	14147	29712	244753	14147	29712	-244753	28,294	59,424	0	0	3980,141	28,294	0	59,424	0							
Wind ang	380C1F3	14278	27097	230753	14278	27097	-230753	28,556	54,194	0	0	3278,522	28,556	0	54,194								
	Comp. gl	3834	8108	67480	3834	8108	-67480	7,668	16,216	0	0	839,0153	7,668	0	16,216								
	150C1F1	3513	7965	64039	3513	7965	-64039	7,026	15,93	0	0	686,4122	7,026	0	15,93								
	150C1F2	3537	7428	61188	3537	7428	-61188	7,074	14,856	0	0	837,8935	7,074	0	14,856								
	150C1F3	3570	6774	57688	3570	6774	-57688	7,14	13,548	0	0	646,6499	7,14	0	13,548								
1b	GW / opg	2160	1131	20381	2160	1131	-20381	4,32	2,262	0	0	78,23544	4,32	0	2,262								
Wind, -20	380C1F1	16978	6363	149169	16978	6363	-149169	33,956	12,726	0	0	490,362	33,956	0	12,726	Wind, -20 (	0	3147,872	157,69	0	59,15		
Permaner	380C1F2	17048	5934	147728	17048	5934	-147728	34,096	11,868	0	0	836,4046	34,096	0	11,868	0							
Wind ang	380C1F3	17130	5412	146078	17130	5412	-146078	34,26	10,824	0	0	790,0816	34,26	0	10,824								
	Comp. gl	4586	1620	39007	4586	1620	-39007	9,172	3,24	0	0	203,8278	9,172	0	3,24								
	150C1F1	4245	1591	37292	4245	1591	-37292	8,49	3,182	0	0	170,6791	8,49	0	3,182								
	150C1F2	4262	1484	36932	4262	1484	-36932	8,524	2,968	0	0	143,5204	8,524	0	2,968								
	150C1F3	4282	1353	36519	4282	1353	-36519	8,564	2,706	0	0	105,1891	8,564	0	2,706								
3	GW / opg	10314	5818	66519	10314	5818	-66519	20,628	11,636	0	0	407,8072	20,628	0	11,636								
Wind+ice,	380C1F1	30923	17789	247327	30923	17789	-247327	61,846	35,578	0	0	1308,505	61,846	0	35,578	Wind+ice, -	0	7934,98	281,72	0	142,674		
Permaner	380C1F2	31086	16591	243269	31086	16591	-243269	62,172	33,182	0	0	2290,145	62,172	0	33,182	0							
Wind ang	380C1F3	31284	15132	238560	31284	15132	-238560	62,568	30,264	0	0	2051,697	62,568	0	30,264								
	Comp. gl	21159	8316	126013	21159	8316	-126013	42,318	16,632	0	0	1023,744	42,318	0	16,632								
	150C1F1	7731	4447	61832	7731	4447	-61832	15,462	8,894	0	0	437,8975	15,462	0	8,894								
	150C1F2	7771	4148	60817	7771	4148	-60817	15,542	8,296	0	0	428,978	15,542	0	8,296								
	150C1F3	7821	3783	59640	7821	3783	-59640	15,642	7,566	0	0	321,9912	15,642	0	7,566								
4	GW / opg	3085	1131	22947	3085	1131	-22947	6,17	2,262	0	0	72,02314	6,17	0	2,262								
Constructi	380C1F1	20363	6366	150988	20363	6366	-150988	40,726	12,732	0	0	503,3312	40,726	0	12,732	Constructi	0	3028,915	169,758	0	53,2		
Permaner	380C1F2	20413	5938	149887	20413	5938	-149887	40,826	11,876	0	0	846,7539	40,826	0	11,876	0							
Wind ang	380C1F3	20472	5416	148635	20472	5416	-148635	40,944	10,832	0	0	822,2077	40,944	0	10,832								
	Comp. gl	6406	1621	45232	6406	1621	-45232	12,812	3,242	0	0	221,1694	12,812	0	3,242								
	150C1F1	5091	1592	37747	5091	1592	-37747	10,182	3,184	0	0	178,7761	10,182	0	3,184								
	150C1F2	5103	1484	37472	5103	1484	-37472	10,206	2,968	0	0	137,8723	10,206	0	2,968								
	150C1F3	5118	1354	37159	5118	1354	-37159	10,236	2,708	0	0	99,67351	10,236	0	2,708								
1a	GW / opg	1913	2829	26629	1913	2829	-26629	3,826	5,658	0	0	219,1303	3,826	0	5,658								
Wind, 10	380C1F1	15149	15920	170919	15149	15920	-170919	30,298	31,84	0	0	1123,782	30,298	0	31,84	Wind, 10 d	0	6401,671	127,368	0	120,008		
Permaner	380C1F2	15268	14848	165403	15268	14848	-165403	30,536	29,696	0	0	2012,922	30,536	0	29,696	0							
Wind ang	380C1F3	15423	13542	158827	15423	13542	-158827	30,846	27,084	0	0	1716,99	30,846	0	27,084								
	Comp. gl	4136	4052	45200	4136	4052	-45200	8,272	8,104	0	0	440,3325	8,272	0	8,104								
	150C1F1	3787	3980	42730	3787	3980	-42730	7,574	7,96	0	0	362,238	7,574	0	7,96								
	150C1F2	3817	3712	41351	3817	3712	-41351	7,634	7,424	0	0	404,957	7,634	0	7,424								
	150C1F3	3856	3385	39707	3856	3385	-39707	7,712	6,77	0	0	309,2181	7,712	0	6,77								
1b	GW / opg	2248	565	18357	2248	565	-18357	4,496	1,13	0	0	31,23243	4,496	0	1,13								
Wind, -20	380C1F1	17425	3181	140493	17425	3181	-140493	34,85	6,362	0	0	278,8541	34,85	0	6,362	Wind, -20 (	0	1695,291	161,46	0	29,572		
Permaner	380C1F2	17448	2967	140095	17448	2967	-140095	34,896	5,934	0	0	444,2425	34,896	0	5,934	0							
Wind ang	380C1F3	17473	2706	139645	17473	2706	-139645	34,946	5,412	0	0	479,4352	34,946	0	5,412								
	Comp. gl	4690	810	36869	4690	810	-36869	9,38	1,62	0	0	124,6231	9,38	0	1,62								
	150C1F1	4356	795	35123	4356	795	-35123	8,712	1,59	0	0	106,4587	8,712	0	1,59								
	150C1F2	4362	742	35024	4362	742	-35024	8,724	1,484	0	0	56,77681	8,724	0	1,484								
	150C1F3	4368	677	34911	4368	677	-34911	8,736	1,354	0	0	37,68751	8,736	0	1,354								
3	GW / opg	10608	2908	60429	10608	2908	-60429	21,216	5,816	0	0	167,2127	21,216	0	5,816								
Wind+ice,	380C1F1	32064	8893	222056	32064	8893	-222056	64,128	17,786	0	0	716,7764	64,128	0	17,786	Wind+ice, -	0	4311,334	290,296	0	71,326		
Permaner	380C1F2	32127	8294	220842	32127	8294	-220842	64,254	16,588	0	0	1193,266	64,254	0	16,588	0							

Wind angl	380C1F3	32200	7565	219463	32200	7565	-219463	64,4	15,13	0	0	1182,603	64,4	0	15,13								
0	Comp. gl	21515	4157	119390	21515	4157	-119390	43,03	8,314	0	0	615,3761	43,03	0	8,314								
	150C1F1	8016	2223	55514	8016	2223	-55514	16,032	4,446	0	0	258,2296	16,032	0	4,446								
	150C1F2	8032	2074	55210	8032	2074	-55210	16,064	4,148	0	0	186,6411	16,064	0	4,148								
	150C1F3	8050	1891	54866	8050	1891	-54866	16,1	3,782	0	0	133,1452	16,1	0	3,782								
4	GW / opgs	3144	566	21644	3144	566	-21644	6,288	1,132	0	0	25,2969	6,288	0	1,132								
Constructi	380C1F1	20676	3183	144456	20676	3183	-144456	41,352	6,366	0	0	291,2509	41,352	0	6,366	Constructic	0	1594,87	168,132	0	23,77		
Permaner	380C1F2	20691	2969	144162	20691	2969	-144162	41,382	5,938	0	0	453,9707	41,382	0	5,938	0							
Wind angl	380C1F3	20708	2708	143831	20708	2708	-143831	41,416	5,416	0	0	510,3156	41,416	0	5,416								
	Comp. gl	6472	810	43883	6472	810	-43883	12,944	1,62	0	0	141,5057	12,944	0	1,62								
	150C1F1	5169	796	36114	5169	796	-36114	10,338	1,592	0	0	114,2431	10,338	0	1,592								
	150C1F2	5173	742	36041	5173	742	-36041	10,346	1,484	0	0	51,33013	10,346	0	1,484								
	150C1F3	5177	677	35958	5177	677	-35958	10,354	1,354	0	0	32,25427	10,354	0	1,354								
								0	0	0	0	0	0	0	0								

W4S400Z+ 24-AB2

Hoogte mast	Ber & bijlage		67	m			
Hoogte onderste stroomdraad (F3)			41	m			
			Hoogte		Excentriciteit ophanging t.o.v. hart mast		
Bliksemdraad = GW / C H_{mast} -	0,716	m =	66,284	m	1,459	m	
1e traverse - 380C1F1 F2 +	8,5	m =	58	m	4,737	m	
1e traverse - 150C1F1			58		-3,358	m	
2e traverse - 380C1F2 F3 +	8,5	m =	49,5	m	4,737	m	
2e traverse - 150C1F2 F3 +			49,5	m	-3,358	m	
3e traverse - 380C1F3			41	m	4,737	m	
3e traverse - 150C1F3			41		-3,358	m	
Passieve lijn = Comp C. F3 -	7,5	m =	33,5	m	1,886	m	

Uit mast			Uit lijnen				
ULS (incl bel factoren)			SLS				
N	V	M	Nmin	Nmax	Vmax	Mlangs;ma	Mdwars;max
[kN]	[kN]	[kNm]	[kN]	[kN]	[kN]	[kNm]	[kNm]
592	136	4319					
592	136	4319	137	269	166	0	9402

		Belastingen uit lijnen						Belasting uit mast		
			M_{langs}	M_{dwars}	N	V_{langs}	V_{dwars}	N	V	M
SLS	0 deg	1a	0	372	155	0	0	493	91	2879
		1b	0	386	161	0	0	493	91	2879
		3	0	681	269	0	0	493	91	2879
		4	0	431	179	0	0	493	91	2879
	45 deg	1a	0	4888	147	0	83	493	91	2879
		1b	0	1291	161	0	17	493	91	2879
		3	0	3371	267	0	51	493	91	2879
		4	0	1336	178	0	17	493	91	2879
	90 deg	1a	0	9402	137	0	166	493	91	2879
		1b	0	2194	159	0	33	493	91	2879
		3	0	6054	262	0	101	493	91	2879
		4	0	2241	177	0	33	493	91	2879
	-45 deg	1a	0	4888	147	0	83	493	91	2879
		1b	0	1291	161	0	17	493	91	2879
		3	0	3371	267	0	51	493	91	2879
		4	0	1336	178	0	17	493	91	2879

regel				Totaal												
			Loadcase	M_{langs}	M_{dwars}	N	V_{langs}	V_{dwars}	Totaal moment	M langs max	M dwars max	N max	V langs max	V dwars max	M tot max	N min
1	Perm load 1,2	0 deg	1a	2879	3251	649	91	91	4342,84	1 x			x			
2	Perm load 1,2	0 deg	1b	2879	3265	654	91	91	4353,363	2 x			x			
3	Perm load 1,2	0 deg	3	2879	3560	763	91	91	4578,732	3 x		x	x			
4	Perm load 1,2	0 deg	4	2879	3310	672	91	91	4387,014	4 x			x			
5										5						
6	Perm load 1,2	45 deg	1a	2879	7767	641	91	174	8283,676	6 x			x			
7	Perm load 1,2	45 deg	1b	2879	4170	654	91	107	5067,629	7 x			x			
8	Perm load 1,2	45 deg	3	2879	6251	760	91	141	6881,883	8 x			x			
9	Perm load 1,2	45 deg	4	2879	4216	672	91	107	5105,194	9 x			x			
10										10						
11	Perm load 1,2	90 deg	1a	2879	12281	631	91	257	12614,08	11 x	x		x	x	x	x
12	Perm load 1,2	90 deg	1b	2879	5073	652	91	124	5833,099	12 x			x			
13	Perm load 1,2	90 deg	3	2879	8934	755	91	192	9386,129	13 x			x			
14	Perm load 1,2	90 deg	4 Construct	2879	5120	671	91	124	5874,039	14 x			x			
15										15						
16	Perm load 1,2	-45 deg	1a	2036	7767	641	91	174	8029,571	16			x			
17	Perm load 1,2	-45 deg	1b	2036	4170	654	91	107	4640,645	17			x			
18	Perm load 1,2	-45 deg	3	2036	6251	760	91	141	6573,814	18			x			
19	Perm load 1,2	-45 deg	4	2036	4216	672	91	107	4681,637	19			x			
				2879	12281	763 631	91	257	12614							

samenvatting

	Mast	Bijlage		Wind	Loadcase	M_{langs}	M_{dwars}	N	V_{langs}	V_{dwars}
3	W4S400Z+:	24-AB2	Perm load :	0 deg	3	2879	3560	763	91	91
11	W4S400Z+:	24-AB2	Perm load :	90 deg	1a	2879	12281	631	91	257
	W4S400Z+:	24-AB2	#N/B	#N/B	#N/B	#N/B	#N/B	#N/B	#N/B	#N/B
	W4S400Z+:	24-AB2	#N/B	#N/B	#N/B	#N/B	#N/B	#N/B	#N/B	#N/B
	W4S400Z+:	24-AB2	#N/B	#N/B	#N/B	#N/B	#N/B	#N/B	#N/B	#N/B
	W4S400Z+:	24-AB2	#N/B	#N/B	#N/B	#N/B	#N/B	#N/B	#N/B	#N/B

W4S400Z+14 TOWER (rev 8.0, date: 23-1 Appendix AB2

W4S400Z+14 TOWER (rev 8.0, date: 23-1 Appendix AB2

Loadcases for tower strength (serviceabilitylimit state)

Loadcase according to 50341-3-15

			AHEAD			**BACK**		Totaal			Belastingen op mastvoet, per lijn					Belasting op mastvoet, belastinggeval					
		[N]	[N]	[N]	[N]	[N]	[N]	Vert [kN]	Dwars [kN]	Langs [kN]	M_{langs}	M_{dwars}	N	V_{langs}	V_{dwars}		M_{langs}	M_{dwars}	N	V_{langs}	V_{dwars}
	Attachment point																				
1a	GW / opgv	2441	0	16659	2441	0	-16659	4,882	0	0	0	9,207452	4,882	0	0	1a	0	371,7733	155,206	0	0
Wind, 10 c	380C1F1 /	18693	0	127555	18693	0	-127555	37,386	0	0	0	54,54617	37,386	0	0	Wind angle: 0 dgr					
Permanen	380C1F2 /	18693	0	127555	18693	0	-127555	37,386	0	0	0	177,0975	37,386	0	0						
Wind angl	380C1F3 /	18693	0	127555	18693	0	-127555	37,386	0	0	0	177,0975	37,386	0	0						
	Comp. gl	5064	0	34554	5064	0	-34554	10,128	0	0	0	47,97634	10,128	0	0						
	150C1F1 /	4673	0	31889	4673	0	-31889	9,346	0	0	0	-31,3839	9,346	0	0						
	150C1F2 /	4673	0	31889	4673	0	-31889	9,346	0	0	0	-31,3839	9,346	0	0						
	150C1F3 /	4673	0	31889	4673	0	-31889	9,346	0	0	0	-31,3839	9,346	0	0						
1b	GW / opgv	2526	0	19101	2526	0	-19101	5,052	0	0	0	9,528072	5,052	0	0	1b	0	385,8176	161,144	0	0
Wind, -20	380C1F1 /	19419	0	148569	19419	0	-148569	38,838	0	0	0	56,66464	38,838	0	0	Wind angle: 0 dgr					
Permanen	380C1F2 /	19419	0	148569	19419	0	-148569	38,838	0	0	0	183,9756	38,838	0	0						
Wind angl	380C1F3 /	19419	0	148569	19419	0	-148569	38,838	0	0	0	183,9756	38,838	0	0						
	Comp. gl	5224	0	39200	5224	0	-39200	10,448	0	0	0	49,49218	10,448	0	0						
	150C1F1 /	4855	0	37142	4855	0	-37142	9,71	0	0	0	-32,6062	9,71	0	0						
	150C1F2 /	4855	0	37142	4855	0	-37142	9,71	0	0	0	-32,6062	9,71	0	0						
	150C1F3 /	4855	0	37142	4855	0	-37142	9,71	0	0	0	-32,6062	9,71	0	0						
3	GW / opgv	8194	0	47130	8194	0	-47130	16,388	0	0	0	30,90777	16,388	0	0	3	0	680,7549	269,18	0	0
Wind+ice,	380C1F1 /	29286	0	194979	29286	0	-194979	58,572	0	0	0	85,45655	58,572	0	0	Wind angle: 0 dgr					
Permanen	380C1F2 /	29286	0	194979	29286	0	-194979	58,572	0	0	0	277,4556	58,572	0	0						
Wind angl	380C1F3 /	29286	0	194979	29286	0	-194979	58,572	0	0	0	277,4556	58,572	0	0						
	Comp. gl	16572	0	95142	16572	0	-95142	33,144	0	0	0	157,0031	33,144	0	0						
	150C1F1 /	7322	0	48745	7322	0	-48745	14,644	0	0	0	-49,1746	14,644	0	0						
	150C1F2 /	7322	0	48745	7322	0	-48745	14,644	0	0	0	-49,1746	14,644	0	0						
	150C1F3 /	7322	0	48745	7322	0	-48745	14,644	0	0	0	-49,1746	14,644	0	0						
4	GW / opgv	3086	0	20717	3086	0	-20717	6,172	0	0	0	11,64039	6,172	0	0	4	0	430,5508	178,76	0	0
Constructi	380C1F1 /	21318	0	145177	21318	0	-145177	42,636	0	0	0	62,20592	42,636	0	0	Wind angle: 0 dgr					
Permanen	380C1F2 /	21318	0	145177	21318	0	-145177	42,636	0	0	0	201,9667	42,636	0	0						
Wind angl	380C1F3 /	21318	0	145177	21318	0	-145177	42,636	0	0	0	201,9667	42,636	0	0						
	Comp. gl	6350	0	42593	6350	0	-42593	12,7	0	0	0	60,1599	12,7	0	0						
	150C1F1 /	5330	0	36294	5330	0	-36294	10,66	0	0	0	-35,7963	10,66	0	0						
	150C1F2 /	5330	0	36294	5330	0	-36294	10,66	0	0	0	-35,7963	10,66	0	0						
	150C1F3 /	5330	0	36294	5330	0	-36294	10,66	0	0	0	-35,7963	10,66	0	0						
1a	GW / opgv	2243	1886	22351	2243	1886	-22351	4,486	3,772	0	0	134,8226	4,486	0	3,772	1a	0	4887,823	147,34	0	83,014
Wind, 10 c	380C1F1 /	17658	10612	152696	17658	10612	-152696	35,316	21,224	0	0	1458,338	35,316	0	21,224	Wind angle: 45 dgr					
Permanen	380C1F2 /	17757	9897	149792	17757	9897	-149792	35,514	19,794	0	0	1316,282	35,514	0	19,794						
Wind angl	380C1F3 /	17878	9027	146417	17878	9027	-146417	35,756	18,054	0	0	1063,049	35,756	0	18,054						
	Comp. gl	4811	2701	40792	4811	2701	-40792	9,622	5,402	0	0	267,0614	9,622	0	5,402						
	150C1F1 /	4414	2653	38174	4414	2653	-38174	8,828	5,306	0	0	278,1036	8,828	0	5,306						
	150C1F2 /	4439	2474	37448	4439	2474	-37448	8,878	4,948	0	0	215,1137	8,878	0	4,948						
	150C1F3 /	4470	2257	36604	4470	2257	-36604	8,94	4,514	0	0	155,0535	8,94	0	4,514						
1b	GW / opgv	2509	377	19404	2509	377	-19404	5,018	0,754	0	0	34,72295	5,018	0	0,754	1b	0	1290,835	160,608	0	16,592
Wind, -20	380C1F1 /	19347	2121	149789	19347	2121	-149789	38,694	4,242	0	0	337,6313	38,694	0	4,242	Wind angle: 45 dgr					
Permanen	380C1F2 /	19356	1978	149631	19356	1978	-149631	38,712	3,956	0	0	412,8267	38,712	0	3,956						
Wind angl	380C1F3 /	19366	1804	149454	19366	1804	-149454	38,732	3,608	0	0	362,0695	38,732	0	3,608						
	Comp. gl	5208	540	39498	5208	540	-39498	10,416	1,08	0	0	93,62059	10,416	0	1,08						
	150C1F1 /	4837	530	37447	4837	530	-37447	9,674	1,06	0	0	28,99471	9,674	0	1,06						
	150C1F2 /	4839	495	37408	4839	495	-37408	9,678	0,99	0	0	16,50628	9,678	0	0,99						
	150C1F3 /	4842	451	37363	4842	451	-37363	9,684	0,902	0	0	4,463128	9,684	0	0,902						
3	GW / opgv	8109	1938	48629	8109	1938	-48629	16,218	3,876	0	0	160,4331	16,218	0	3,876	3	0	3371,247	267	0	50,664
Wind+ice,	380C1F1 /	29006	5928	200038	29006	5928	-200038	58,012	11,856	0	0	870,5026	58,012	0	11,856	Wind angle: 45 dgr					
Permanen	380C1F2 /	29041	5529	199392	29041	5529	-199392	58,082	11,058	0	0	916,4984	58,082	0	11,058						
Wind angl	380C1F3 /	29080	5042	198662	29080	5042	-198662	58,16	10,084	0	0	774,6619	58,16	0	10,084						
	Comp. gl	16483	2770	96670	16483	2770	-96670	32,966	5,54	0	0	383,2999	32,966	0	5,54						
	150C1F1 /	7251	1482	50010	7251	1482	-50010	14,502	2,964	0	0	123,2143	14,502	0	2,964						
	150C1F2 /	7260	1382	49848	7260	1382	-49848	14,52	2,764	0	0	88,05984	14,52	0	2,764						
	150C1F3 /	7270	1261	49666	7270	1261	-49666	14,54	2,522	0	0	54,57668	14,54	0	2,522						
4	GW / opgv	3075	377	20932	3075	377	-20932	6,15	0,754	0	0	36,8579	6,15	0	0,754	4	0	1336,405	178,38	0	16,6
Constructi	380C1F1 /	21267	2122	146166	21267	2122	-146166	42,534	4,244	0	0	343,3664	42,534	0	4,244	Wind angle: 45 dgr					
Permanen	380C1F2 /	21273	1979	146038	21273	1979	-146038	42,546	3,958	0	0	431,1044	42,546	0	3,958						
Wind angl	380C1F3 /	21281	1805	145894	21281	1805	-145894	42,562	3,61	0	0	380,3112	42,562	0	3,61						
	Comp. gl	6339	540	42806	6339	540	-42806	12,678	1,08	0	0	104,3357	12,678	0	1,08						
	150C1F1 /	5317	531	36542	5317	531	-36542	10,634	1,062	0	0	25,88703	10,634	0	1,062						
	150C1F2 /	5318	495	36510	5318	495	-36510	10,636	0,99	0	0	13,28931	10,636	0	0,99						
	150C1F3 /	5320	451	36473	5320	451	-36473	10,64	0,902	0	0	1,25288	10,64	0	0,902						
1a	GW / opgv	2079	3773	32390	2079	3773	-32390	4,158	7,546	0	0	260,633	4,158	0	7,546	1a	0	9401,723	137,494	0	166,084
Wind, 10 c	380C1F1 /	16437	21232	203900	16437	21232	-203900	32,874	42,464	0	0	2862,647	32,874	0	42,464	Wind angle: 90 dgr					
Permanen	380C1F2 /	16567	19801	196523	16567	19801	-196523	33,134	39,602	0	0	2453,872	33,134	0	39,602						
Wind angl	380C1F3 /	16739	18059	187645	16739	18059	-187645	33,478	36,118	0	0	1946,426	33,478	0	36,118						
	Comp. gl	4489	5404	53910	4489	5404	-53910	8,978	10,808	0	0	485,6568	8,978	0	10,808						
	150C1F1 /	4109	5308	50975	4109	5308	-50975	8,218	10,616	0	0	588,132	8,218	0	10,616						
	150C1F2 /	4142	4950	49131	4142	4950	-49131	8,284	9,9	0	0	462,2323	8,284	0	9,9						
	150C1F3 /	4185	4515	46911	4185	4515	-46911	8,37	9,03	0	0	342,1235	8,37	0	9,03						
1b	GW / opgv	2466	754	20269	2466	754	-20269	4,932	1,508	0	0	59,81975	4,932	0	1,508	1b	0	2193,583	159,11	0	33,182
Wind, -20	380C1F1 /	19146	4242	153346	19146	4242	-153346	38,292	8,484	0	0	618,2215	38,292	0	8,484	Wind angle: 90 dgr					
Permanen	380C1F2 /	19179	3956	152739	19179	3956	-152739	38,358	7,912	0	0	640,5978	38,358	0	7,912						
Wind angl	380C1F3 /	19217	3608	152053	19217	3608	-152053	38,434	7,216	0	0	539,2539	38,434	0	7,216						
	Comp. gl	5162	1080	40371	5162	1080	-40371	10,324	2,16	0	0	137,4648	10,324	0	2,16						
	150C1F1 /	4786	1060	38337	4786	1060	-38337	9,572	2,12	0	0	90,81722	9,572	0	2,12						
	150C1F2 /	4795	989	38185	4795	989	-38185	9,59	1,978	0	0	65,70778	9,59	0	1,978						
	150C1F3 /	4804	902	38013	4804	902	-38013	9,608	1,804	0	0	41,70034	9,608	0	1,804						
3	GW / opgv	7909	3876	52693	7909	3876	-52693	15,818	7,752	0	0	289,5247	15,818	0	7,752	3	0	6054,247	261,53	0	101,334
Wind+ice,	380C1F1 /	28316	11856	214026	28316	11856	-214026	56,632	23,712	0	0	1654,352	56,632	0	23,712	Wind angle: 90 dgr					
Permanen	380C1F2 /	28422	11058	211713	28422	11058	-211713	56,844	22,116	0	0	1551,998	56,844	0	22,116						
Wind angl	380C1F3 /	28547	10086	209060	28547	10086	-209060	57,094	20,172	0	0	1268,968	57,094	0	20,172						
	Comp. gl	16250	5541	101013	16250	5541	-101013	32,5	11,082	0	0	608,3145	32,5	0	11,082						
	150C1F1 /	7079	2964	53506	7079	2964	-53506	14,158	5,928	0	0	296,2814	14,158	0	5,928						
	150C1F2 /	7105	2765	52928	7105	2765	-52928	14,21	5,53	0	0	226,0178	14,21	0	5,53						
	150C1F3 /	7137	2521	52265	7137	2521	-52265	14,274	5,042	0	0	158,7899	14,274	0	5,042						
4	GW / opgv	3045	754	21556	3045	754	-21556	6,09	1,508	0	0	62,00374	6,09	0	1,508	4	0	2240,606	177,294	0	33,2
Constructi	380C1F1 /	21120	4244	149073	21120	4244	-149073	42,24	8,488	0	0	624,2468	42,24	0	8,488	Wind angle: 90 dgr					
Permanen	380C1F2 /	21144	3958	148575	21144	3958	-148575	42,288	7,916	0	0	659,4463	42,288	0	7,916						
Wind angl	380C1F3 /	21172	3610	148012	21172	3610	-148012	42,344	7,22	0	0	557,9735	42,344	0	7,22						
	Comp. gl	6307	1080	43437	6307	1080	-43437	12,614	2,16	0	0	148,3125	12,614	0	2,16						
	150C1F1 /	5280	1061	37268	5280	1061	-37268	10,56	2,122	0	0	87,61552	10,56	0	2,122						
	150C1F2 /	5286	990	37144	5286	990	-37144	10,572	1,98	0	0	62,50922	10,572	0	1,98						
	150C1F3 /	5293	903	37003	5293	903	-37003	10,586	1,806	0	0	38,49821	10,586	0	1,806						
1a	GW / opgv	2243	1886	22351	2243	1886	-22351	4,486	3,772	0	0	134,8226	4,486	0	3,772	1a	0	4887,823	147,34	0	83,014
Wind, 10 c	380C1F1 /	17658	10612	152696	17658	10612	-152696	35,316	21,224	0	0	1458,338	35,316	0	21,224	Wind angle: -45 dgr					
Permanen	380C1F2 /	17757	9897	149792	17757	9897	-149792	35,514	19,794	0	0	1316,282	35,514	0	19,794						
Wind angl	380C1F3 /	17878	9027	146417	17878	9027	-146417	35,756	18,054	0	0	1063,049	35,756	0	18,054						
	Comp. gl	4811	2701	40792	4811	2701	-40792	9,622	5,402	0	0	267,0614	9,622	0	5,402						
	150C1F1 /	4414	2653	38174	4414	2653	-38174	8,828	5,306	0	0	278,1036	8,828	0	5,306						
	150C1F2 /	4439	2474	37448	4439	2474	-37448	8,878	4,948	0	0	215,1137	8,878	0	4,948						
	150C1F3 /	4470	2257	36604	4470	2257	-36604	8,94	4,514	0	0	155,0535	8,94	0	4,514						
1b	GW / opgv	2509	377	19404	2509	377	-19404	5,018	0,754	0	0	34,72295	5,018	0	0,754	1b	0	1290,835	160,608	0	16,592
Wind, -20	380C1F1 /	19347	2121	149789	19347	2121	-149789	38,694	4,242	0	0	337,6313	38,694	0	4,242	Wind angle: -45 dgr					

Permanen	380C1F2 / 19356	1978	149631	19356	1978	-149631	38,712	3,956	0	0	412,8267	38,712	0	3,956								
Wind ang	380C1F3 / 19366	1804	149454	19366	1804	-149454	38,732	3,608	0	0	362,0695	38,732	0	3,608								
	Comp. gl 5208	540	39498	5208	540	-39498	10,416	1,08	0	0	93,62059	10,416	0	1,08								
	150C1F1 / 4837	530	37447	4837	530	-37447	9,674	1,06	0	0	28,99471	9,674	0	1,06								
	150C1F2 / 4839	495	37408	4839	495	-37408	9,678	0,99	0	0	16,50628	9,678	0	0,99								
	150C1F3 / 4842	451	37363	4842	451	-37363	9,684	0,902	0	0	4,463128	9,684	0	0,902								
3	GW / opgv8109	1938	48629	8109	1938	-48629	16,218	3,876	0	0	160,4331	16,218	0	3,876	3	0	3371,247	267	0	50,664		
Wind+ice,	380C1F1 / 29006	5928	200038	29006	5928	-200038	58,012	11,856	0	0	870,5026	58,012	0	11,856	Wind angle: -45 dgr							
Permanen	380C1F2 / 29041	5529	199392	29041	5529	-199392	58,082	11,058	0	0	916,4984	58,082	0	11,058								
Wind ang	380C1F3 / 29080	5042	198662	29080	5042	-198662	58,16	10,084	0	0	774,6619	58,16	0	10,084								
	Comp. gl 16483	2770	96670	16483	2770	-96670	32,966	5,54	0	0	383,2999	32,966	0	5,54								
	150C1F1 / 7251	1482	50010	7251	1482	-50010	14,502	2,964	0	0	123,2143	14,502	0	2,964								
	150C1F2 / 7260	1382	49848	7260	1382	-49848	14,52	2,764	0	0	88,05984	14,52	0	2,764								
	150C1F3 / 7270	1261	49666	7270	1261	-49666	14,54	2,522	0	0	54,57668	14,54	0	2,522								
4	GW / opgv3075	377	20932	3075	377	-20932	6,15	0,754	0	0	36,8579	6,15	0	0,754	4	0	1336,405	178,38	0	16,6		
Constructi	380C1F1 / 21267	2122	146166	21267	2122	-146166	42,534	4,244	0	0	343,3664	42,534	0	4,244	Wind angle: -45 dgr							
Permanen	380C1F2 / 21273	1979	146038	21273	1979	-146038	42,546	3,958	0	0	431,1044	42,546	0	3,958								
Wind ang	380C1F3 / 21281	1805	145894	21281	1805	-145894	42,562	3,61	0	0	380,3112	42,562	0	3,61								
	Comp. gl 6339	540	42806	6339	540	-42806	12,678	1,08	0	0	104,3357	12,678	0	1,08								
	150C1F1 / 5317	531	36542	5317	531	-36542	10,634	1,062	0	0	25,88703	10,634	0	1,062								
	150C1F2 / 5318	495	36510	5318	495	-36510	10,636	0,99	0	0	13,28931	10,636	0	0,99								
	150C1F3 / 5320	451	36473	5320	451	-36473	10,64	0,902	0	0	1,25288	10,64	0	0,902								

W4H400ZA 25-AK

Hoogte mast	Ber & bijlage		58 m		
Hoogte onderste stroomdraad (F3)			32 m		
			Hoogte	Excentriciteit ophanging t.o.v. hart mast	
Bliksemdraad = GW / (	H_{mast} -	0,57 m =	57,43 m	0,76 m	
1e traverse - 380C1F1	F2 +	8,5 m =	49 m	0 m	
1e traverse - 150C1F1			49	5,5 m	
2e traverse - 380C1F2	F3 +	8,5 m =	40,5 m	0 m	
2e traverse - 150C1F2	F3 +		40,5 m	5,5 m	
3e traverse - 380C1F3			32 m	0 m	
3e traverse - 150C1F3			32	5,5 m	
Passieve lijn = Comp C	F3 -	7,5 m =	24,5 m	2,05 m	

Uit mast (excl belastingsfactoren)			Uit lijnen (incl belastingsfactoren)				
N	V	M	Nmin	Nmax	Vmax	Mlangs;ma	Mdwars;max
[kN]	[kN]	[kNm]	[kN]	[kN]	[kN]	[kNm]	[kNm]
857	115	3123	96	254	306	7995	12496
857	115	3123	43,451	156,812	879,681	35215,1	7342,573
857	115	3123	43	254,173	879,681	35215,1	12496,19

				Belastingen uit lijnen					Belasting uit mast		
				M_{langs}	M_{dwars}	N	V_{langs}	V_{dwars}	N	V	M
Perm load 1,2	0 deg	1a		4489	2057	129	111	49	857	115	3123
		1b		5157	2329	129	127	56	857	22	586
			3	7250	3638	254	179	87	857	32	878
			4	5215	2400	154	129	57	857	22	586
			6	4934	2245	145	122	54			
	45 deg	1a		3920	7013	129	97	171	857	115	3123
		1b		5112	3245	129	126	79	857	22	586
			3	7085	6463	254	175	156	857	32	878
			4	5181	3311	154	128	80	857	22	586
	90 deg	1a		7658	12496	129	188	306	857	115	3123
		1b		5365	4225	129	132	103	857	22	586
			3	7995	9498	254	197	231	857	32	878
			4	5378	4276	154	133	103	857	22	586
	-45 deg	1a		7248	7105	129	178	173	857	115	3123
		1b		5306	3262	129	131	79	857	22	586
			3	7808	6509	254	192	158	857	32	878
			4	5330	3328	154	132	80	857	22	586
	0 deg	1a		3550	1625	97	88	39	857	115	3123
		1b		4169	1876	96	103	45	857	22	586
			3	6446	3273	222	159	78	857	32	878
			4	4314	1987	121	107	48	857	22	586
			6	3550	1608	97	88	39			
	45 deg	1a		2978	6727	97	73	164	857	115	3123
		1b		4105	2804	96	101	68	857	22	586
			3	6256	6116	222	155	148	857	32	878
			4	4269	2905	121	105	70	857	22	586
	90 deg	1a		7317	12327	97	179	302	857	115	3123
		1b		4467	3814	96	110	93	857	22	586
			3	7339	9194	222	181	224	857	32	878
			4	4535	3887	121	112	94	857	22	586
	-45 deg	1a		6971	**6821**	97	171	**167**	857	115	3123
		1b		**4387**	**2821**	**96**	**108**	**68**	857	22	586
			3	**7119**	6163	**222**	**175**	149	857	32	878
			4	4471	2921	121	110	71	857	22	586

regel			Loadcase	Totaal M_{langs}	M_{dwars}	N	V_{langs}	V_{dwars}	Totaal moment							
1	Perm load 1,2	0 deg	1a	7612	2057	986	226	49	7884,951	1						
2	Perm load 1,2	0 deg	1b	5742	2329	986	149	56	6196,661	2						
3	Perm load 1,2	0 deg	3	8128	3638	1111	211	87	8905,233	3						
4	Perm load 1,2	0 deg	4	5801	2400	1011	150	57	6277,67	4						
5	Perm load 1,2	0 deg	6							5						
6										6						
7	Perm load 1,2	45 deg	1a	6128	9222	986	178	252	11072,19	7						
8	Perm load 1,2	45 deg	1b	5526	3659	986	141	94	6627,635	8						
9	Perm load 1,2	45 deg	3	7706	7084	1111	198	179	10466,93	9						
10	Perm load 1,2	45 deg	4	5595	3725	1011	143	95	6721,942	10						
11										11						
12	Perm load 1,2	90 deg	1a	7658	15619	986	188	421	17395,49	12		x			x	x
13	Perm load 1,2	90 deg	1b	5365	4811	986	132	124	7205,874	13						
14	Perm load 1,2	90 deg	3	7995	10376	1111	197	264	13099,08	14			x			
15	Perm load 1,2	90 deg	4 Construc	5378	4861	1011	133	125	7249,688	15						
16										16						
17	Perm load 1,2	-45 deg	1a	9456	9314	986	259	254	13272,79	17	x			x		
18	Perm load 1,2	-45 deg	1b	5720	3676	986	146	94	6799,432	18						
19	Perm load 1,2	-45 deg	3	8429	7130	1111	215	180	11040,22	19						
20	Perm load 1,2	-45 deg	4	5744	3742	1011	147	95	6854,916	20						
21										21						
22	Perm load 0,9	0 deg	1a	6673	1625	954	203	39	6867,6	22						
23	Perm load 0,9	0 deg	1b	4754	1876	953	124	45	5111,045	23						
24	Perm load 0,9	0 deg	3	7324	3273	1079	191	78	8022,268	24						
25	Perm load 0,9	0 deg	4	4900	1987	978	128	48	5287,356	25						
26	Perm load 0,9	0 deg	6							26						
27										27						
28	Perm load 0,9	45 deg	1a	5187	8935	954	155	246	10331,08	28						
29	Perm load 0,9	45 deg	1b	4519	3218	953	117	83	5547,511	29						
30	Perm load 0,9	45 deg	3	6877	6737	1079	177	171	9627,142	30						
31	Perm load 0,9	45 deg	4 Construc	4683	3319	978	121	85	5739,807	31						
32										32						
33	Perm load 0,9	90 deg	1a	7317	15450	954	179	417	17094,9	33						
34	Perm load 0,9	90 deg	1b	4467	4399	953	110	114	6269,757	34						
35	Perm load 0,9	90 deg	3	7339	10073	1079	181	257	12462,74	35						
36	Perm load 0,9	90 deg	4	4535	4473	978	112	116	6369,84	36						
37										37						
38	Perm load 0,9	-45 deg	1a	9179	9030	954	252	248	12875,9	38						
39	Perm load 0,9	-45 deg	1b	4801	3235	953	123	84	5789,289	39						
40	Perm load 0,9	-45 deg	3	7740	6784	1079	198	172	10292,22	40						
41	Perm load 0,9	-45 deg	4	4885	3335	978	126	86	5914,862	41						
			Max	9456	15619	1111	259	421	17395							

samenvatting

	Mast	Bijlage		Wind	Loadcase	M_{langs}	M_{dwars}	N	V_{langs}	V_{dwars}
12	W4H400ZA	25-AK	Perm load	90 deg	1a	7658	15619	986	188	421
14	W4H400ZA	25-AK	Perm load	90 deg	3	7995	10376	1111	197	264
17	W4H400ZA	25-AK	Perm load	-45 deg	1a	9456	9314	986	259	254

W4H400ZA+5 (Aftak m ast 34 en 106) (rev 8.0, date: 23-11-: APPENDIX: AK
Loadcases for tower strength (ultimate limit state)
Loadcase according to 50341-3-15

			AHEAD		BACK			Totaal			Belastingen op mastvoet, per lijn				
		[N]	[N]	[N]	[N]	[N]	[N]	Vert	Dwars	Langs	M_{langs}	M_{dwars}	N	V_{langs}	V_{dwars}
	Attachment	point						[kN]	[kN]	[kN]					
1a	Comp. gl	4617	1768	40154	4617	1768	-40154	9,234	3,536	0	0	105,5617	9,234	0	3,536
Wind, 10 (	GW / opgv	2226	857	19378	2226	857	-19378	4,452	1,714	0	0	101,8185	4,452	0	1,714
Permaner	380C1F1	17045	6512	147783	17045	6512	-147783	34,09	13,024	0	0	638,176	34,09	0	13,024
Wind angl	380C1F2	17045	6508	147784	17045	6508	-147784	34,09	13,016	0	0	527,148	34,09	0	13,016
	380C1F3	17045	6503	147784	17045	6503	-147784	34,09	13,006	0	0	416,192	34,09	0	13,006
	150C1F1	4261	1628	36946	0	0	0	4,261	1,628	36,946	1810,354	103,2075	4,261	36,946	1,628
	150C1F2	4261	1627	36946	0	0	0	4,261	1,627	36,946	1496,313	89,329	4,261	36,946	1,627
	150C1F3	4261	1626	36946	0	0	0	4,261	1,626	36,946	1182,272	75,4675	4,261	36,946	1,626
1b	Comp. gl	4615	1971	45077	4615	1971	-45077	9,23	3,942	0	0	115,5005	9,23	0	3,942
Wind, -20	GW / opgv	2225	961	21970	2225	961	-21970	4,45	1,922	0	0	113,7625	4,45	0	1,922
Permaner	380C1F1	17036	7424	169770	17036	7424	-169770	34,072	14,848	0	0	727,552	34,072	0	14,848
Wind angl	380C1F2	17036	7423	169770	17036	7423	-169770	34,072	14,846	0	0	601,263	34,072	0	14,846
	380C1F3	17036	7422	169770	17036	7422	-169770	34,072	14,844	0	0	475,008	34,072	0	14,844
	150C1F1	4259	1856	42443	0	0	0	4,259	1,856	42,443	2079,707	114,3685	4,259	42,443	1,856
	150C1F2	4259	1856	42443	0	0	0	4,259	1,856	42,443	1718,942	98,5925	4,259	42,443	1,856
	150C1F3	4259	1856	42443	0	0	0	4,259	1,856	42,443	1358,176	82,8165	4,259	42,443	1,856
3	Comp. gl	18676	5364	122499	18676	5364	-122499	37,352	10,728	0	0	339,4076	37,352	0	10,728
Wind+ice,	GW / opgv	9244	2664	60776	9244	2664	-60776	18,488	5,328	0	0	320,0379	18,488	0	5,328
Permaner	380C1F1	29376	10454	238678	29376	10454	-238678	58,752	20,908	0	0	1024,492	58,752	0	20,908
Wind angl	380C1F2	29376	10452	238678	29376	10452	-238678	58,752	20,904	0	0	846,612	58,752	0	20,904
	380C1F3	29376	10449	238678	29376	10449	-238678	58,752	20,898	0	0	668,736	58,752	0	20,898
	150C1F1	7344	2614	59670	0	0	0	7,344	2,614	59,67	2923,83	168,478	7,344	59,67	2,614
	150C1F2	7344	2613	59670	0	0	0	7,344	2,613	59,67	2416,635	146,2185	7,344	59,67	2,613
	150C1F3	7344	2612	59670	0	0	0	7,344	2,612	59,67	1909,44	123,976	7,344	59,67	2,612
4	Comp. gl	6122	2243	51307	6122	2243	-51307	12,244	4,486	0	0	135,0072	12,244	0	4,486
Constructi	GW / opgv	2978	1094	25008	2978	1094	-25008	5,956	2,188	0	0	130,1834	5,956	0	2,188
Permaner	380C1F1	20053	7508	171694	20053	7508	-171694	40,106	15,016	0	0	735,784	40,106	0	15,016
Wind angl	380C1F2	20053	7507	171694	20053	7507	-171694	40,106	15,014	0	0	608,067	40,106	0	15,014
	380C1F3	20053	7506	171694	20053	7506	-171694	40,106	15,012	0	0	480,384	40,106	0	15,012
	150C1F1	5013	1877	42923	0	0	0	5,013	1,877	42,923	2103,227	119,5445	5,013	42,923	1,877
	150C1F2	5013	1877	42923	0	0	0	5,013	1,877	42,923	1738,382	103,59	5,013	42,923	1,877
	150C1F3	5013	1877	42923	0	0	0	5,013	1,877	42,923	1373,536	87,6355	5,013	42,923	1,877
6	Comp. gl	5195	1931	44221	5195	1931	-44221	10,39	3,862	0	0	115,9185	10,39	0	3,862
Permaner	GW / opgv	2505	932	21353	2505	932	-21353	5,01	1,864	0	0	110,8571	5,01	0	1,864
Permaner	380C1F1	19177	7092	162441	19177	7092	-162441	38,354	14,184	0	0	695,016	38,354	0	14,184
	380C1F2	19177	7092	162441	19177	7092	-162441	38,354	14,184	0	0	574,452	38,354	0	14,184
	380C1F3	19177	7092	162441	19177	7092	-162441	38,354	14,184	0	0	453,888	38,354	0	14,184
	150C1F1	4794	1773	40610	0	0	0	4,794	1,773	40,61	1989,89	113,244	4,794	40,61	1,773
	150C1F2	4794	1773	40610	0	0	0	4,794	1,773	40,61	1644,705	98,1735	4,794	40,61	1,773
	150C1F3	4794	1773	40610	0	0	0	4,794	1,773	40,61	1299,52	83,103	4,794	40,61	1,773
1a	Comp. gl	4618	5672	48388	4618	6478	-51270	9,236	12,15	-2,882	-70,609	316,6088	9,236	-2,882	12,15
Wind, 10 (	GW / opgv	2227	3737	27140	2227	4330	-29532	4,454	8,067	-2,392	-137,373	466,6729	4,454	-2,392	8,067
Permaner	380C1F1	17049	22291	182248	17051	25542	-193988	34,1	47,833	-11,74	-575,26	2343,817	34,1	-11,74	47,833
Wind angl	380C1F2	17049	21096	178135	17050	24102	-188700	34,099	45,198	-10,565	-427,883	1830,519	34,099	-10,565	45,198
	380C1F3	17048	19618	173239	17049	22318	-182342	34,097	41,936	-9,103	-291,296	1341,952	34,097	-9,103	41,936
	150C1F1	4262	5573	45562	0	0	0	4,262	5,573	45,562	2232,538	296,518	4,262	45,562	5,573
	150C1F2	4262	5274	44534	0	0	0	4,262	5,274	44,534	1803,627	237,038	4,262	44,534	5,274
	150C1F3	4262	4904	43310	0	0	0	4,262	4,904	43,31	1385,92	180,369	4,262	43,31	4,904
1b	Comp. gl	4615	2696	45453	4615	2839	-45615	9,23	5,535	-0,162	-3,969	154,529	9,23	-0,162	5,535
Wind, -20	GW / opgv	2225	1487	22383	2225	1592	-22556	4,45	3,079	-0,173	-9,93539	180,209	4,45	-0,173	3,079
Permaner	380C1F1	17036	10347	171387	17036	10925	-172082	34,072	21,272	-0,695	-34,055	1042,328	34,072	-0,695	21,272
Wind angl	380C1F2	17036	10135	171160	17036	10669	-171760	34,072	20,804	-0,6	-24,3	842,562	34,072	-0,6	20,804
	380C1F3	17036	9871	170900	17036	10352	-171392	34,072	20,223	-0,492	-15,744	647,136	34,072	-0,492	20,223
	150C1F1	4259	2587	42847	0	0	0	4,259	2,587	42,847	2099,503	150,1875	4,259	42,847	2,587
	150C1F2	4259	2534	42790	0	0	0	4,259	2,534	42,79	1732,995	126,0515	4,259	42,79	2,534
	150C1F3	4259	2468	42725	0	0	0	4,259	2,468	42,725	1367,2	102,4005	4,259	42,725	2,468
3	Comp. gl	18677	9067	124021	18677	9793	-124681	37,354	18,86	-0,66	-16,17	538,6457	37,354	-0,66	18,86
Wind+ice,	GW / opgv	9245	5348	62397	9245	5879	-63076	18,49	11,227	-0,679	-38,995	658,819	18,49	-0,679	11,227
Permaner	380C1F1	29377	18695	244780	29378	20335	-247325	58,755	39,03	-2,545	-124,705	1912,47	58,755	-2,545	39,03
Wind angl	380C1F2	29377	18091	243941	29377	19609	-246151	58,754	37,7	-2,21	-89,505	1526,85	58,754	-2,21	37,7
	380C1F3	29377	17343	242979	29377	18708	-244799	58,754	36,051	-1,82	-58,24	1153,632	58,754	-1,82	36,051
	150C1F1	7344	4674	61195	0	0	0	7,344	4,674	61,195	2998,555	269,418	7,344	61,195	4,674
	150C1F2	7344	4523	60985	0	0	0	7,344	4,523	60,985	2469,893	223,5735	7,344	60,985	4,523
	150C1F3	7344	4336	60745	0	0	0	7,344	4,336	60,745	1943,84	179,144	7,344	60,745	4,336
4	Comp. gl	6122	2963	51551	6122	3103	-51659	12,244	6,066	-0,108	-2,646	173,7172	12,244	-0,108	6,066
Constructi	GW / opgv	2978	1614	25277	2978	1716	-25392	5,956	3,33	-0,115	-6,60445	195,7685	5,956	-0,115	3,33
Permaner	380C1F1	20053	10417	172937	20053	10988	-173480	40,106	21,405	-0,543	-26,607	1048,845	40,106	-0,543	21,405
Wind angl	380C1F2	20053	10206	172760	20053	10735	-173228	40,106	20,941	-0,468	-18,954	848,1105	40,106	-0,468	20,941
	380C1F3	20053	9945	172558	20053	10422	-172941	40,106	20,367	-0,383	-12,256	651,744	40,106	-0,383	20,367
	150C1F1	5013	2604	43234	0	0	0	5,013	2,604	43,234	2118,466	155,1675	5,013	43,234	2,604
	150C1F2	5013	2552	43190	0	0	0	5,013	2,552	43,19	1749,195	130,9275	5,013	43,19	2,552
	150C1F3	5013	2486	43140	0	0	0	5,013	2,486	43,14	1380,48	107,1235	5,013	43,14	2,486
1a	Comp. gl	4620	10775	68449	4620	10775	-68449	9,24	21,55	0	0	546,917	9,24	0	21,55
Wind, 10 (	GW / opgv	2228	7438	42434	2228	7438	-42434	4,456	14,876	0	0	857,7152	4,456	0	14,876
Permaner	380C1F1	17059	42810	262168	17059	42810	-262168	34,118	85,62	0	0	4195,38	34,118	0	85,62
Wind angl	380C1F2	17058	40112	251284	17058	40112	-251284	34,116	80,224	0	0	3249,072	34,116	0	80,224
	380C1F3	17056	36753	237768	17056	36753	-237768	34,112	73,506	0	0	2352,192	34,112	0	73,506
	150C1F1	4265	10702	65542	0	0	0	4,265	10,702	65,542	3211,558	547,8555	4,265	65,542	10,702
	150C1F2	4264	10028	62821	0	0	0	4,264	10,028	62,821	2544,251	429,586	4,264	62,821	10,028
	150C1F3	4264	9188	59442	0	0	0	4,264	9,188	59,442	1902,144	317,468	4,264	59,442	9,188
1b	Comp. gl	4615	3603	46901	4615	3603	-46901	9,23	7,206	0	0	195,4685	9,23	0	7,206
Wind, -20	GW / opgv	2225	2158	23884	2225	2158	-23884	4,45	4,316	0	0	251,2499	4,45	0	4,316
Permaner	380C1F1	17037	14017	177552	17037	14017	-177552	34,074	28,034	0	0	1373,666	34,074	0	28,034
Wind angl	380C1F2	17037	13527	176509	17037	13527	-176509	34,074	27,054	0	0	1095,687	34,074	0	27,054
	380C1F3	17036	12922	175306	17036	12922	-175306	34,072	25,844	0	0	827,008	34,072	0	25,844
	150C1F1	4259	3504	44388	0	0	0	4,259	3,504	44,388	2175,012	195,1205	4,259	44,388	3,504
	150C1F2	4259	3382	44127	0	0	0	4,259	3,382	44,127	1787,144	160,3955	4,259	44,127	3,382
	150C1F3	4259	3231	43827	0	0	0	4,259	3,231	43,827	1402,464	126,8165	4,259	43,827	3,231
3	Comp. gl	18679	13656	129839	18679	13656	-129839	37,358	27,312	0	0	745,7279	37,358	0	27,312
Wind+ice,	GW / opgv	9247	8715	68145	9247	8715	-68145	18,494	17,43	0	0	1015,06	18,494	0	17,43
Permaner	380C1F1	29382	29145	266401	29382	29145	-266401	58,764	58,29	0	0	2856,21	58,764	0	58,29
Wind angl	380C1F2	29381	27751	262880	29381	27751	-262880	58,762	55,502	0	0	2247,831	58,762	0	55,502
	380C1F3	29380	26025	258752	29380	26025	-258752	58,76	52,05	0	0	1665,6	58,76	0	52,05
	150C1F1	7345	7286	66600	0	0	0	7,345	7,286	66,6	3263,4	397,4115	7,345	66,6	7,286
	150C1F2	7345	6938	65720	0	0	0	7,345	6,938	65,72	2661,66	321,3865	7,345	65,72	6,938
	150C1F3	7345	6506	64688	0	0	0	7,345	6,506	64,688	2070,016	248,5895	7,345	64,688	6,506
4	Comp. gl	6122	3850	52532	6122	3850	-52532	12,244	7,7	0	0	213,7502	12,244	0	7,7
Constructi	GW / opgv	2978	2265	26304	2978	2265	-26304	5,956	4,53	0	0	264,6845	5,956	0	4,53
Permaner	380C1F1	20053	14031	177807	20053	14031	-177807	40,106	28,062	0	0	1375,038	40,106	0	28,062
Wind angl	380C1F2	20053	13551	176977	20053	13551	-176977	40,106	27,102	0	0	1097,631	40,106	0	27,102
	380C1F3	20053	12957	176021	20053	12957	-176021	40,106	25,914	0	0	829,248	40,106	0	25,914
	150C1F1	5013	3508	44452	0	0	0	5,013	3,508	44,452	2178,148	199,4635	5,013	44,452	3,508

Belasting op mastvoet, belastinggeval

	M_{langs}	M_{dwars}	N	V_{langs}	V_{dwars}
1a	4488,939	2056,9	128,739	110,838	49,177
Wind angle: 0 dgr					
1b	5156,825	2328,863	128,673	127,329	55,97
Wind angle: 0 dgr					
3	7249,905	3637,958	254,128	179,01	86,605
Wind angle: 0 dgr					
4	5215,145	2400,196	153,557	128,769	57,347
Wind angle: 0 dgr					
6	4934,115	2244,652	144,844	121,83	53,597
0					
1a	3919,665	7013,495	128,772	96,724	170,935
Wind angle: 45 dgr					
1b	5111,695	3245,403	128,673	126,24	78,502
Wind angle: 45 dgr					
3	7084,673	6462,552	254,139	175,011	156,401
Wind angle: 45 dgr					
4	5181,074	3311,404	153,557	127,947	79,751
Wind angle: 45 dgr					
1a	7657,953	12496,19	128,835	187,805	305,694
Wind angle: 90 dgr					
1b	5364,62	4225,412	128,677	132,342	102,571
Wind angle: 90 dgr					
3	7995,076	9497,817	254,173	197,008	231,314
Wind angle: 90 dgr					
4	5378,19	4275,82	153,557	132,701	103,443
Wind angle: 90 dgr					

	150C1F2	5013	3388	44244	0	0	0	5,013	3,388	44,244	1791,882	164,7855	5,013	44,244	3,388						
	150C1F3	5013	3239	44005	0	0	0	5,013	3,239	44,005	1408,16	131,2195	5,013	44,005	3,239						
1a	Comp. gl	4618	6478	51270	4618	5672	-48388	9,236	12,15	2,882	70,609	316,6088	9,236	2,882	12,15	1a	7248,081	7105,353	128,773	177,939	173,174
Wind, 10 (	GW / opgv	2227	4330	29532	2227	3737	-27140	4,454	8,067	2,392	137,3726	466,6729	4,454	2,392	8,067	Wind angle: -45 dgr					
Permaner	380C1F1	17051	25542	193988	17049	22291	-182248	34,1	47,833	11,74	575,26	2343,817	34,1	11,74	47,833						
Wind angl	380C1F2	17050	24102	188700	17049	21096	-178135	34,099	45,198	10,565	427,8825	1830,519	34,099	10,565	45,198						
	380C1F3	17049	22318	182342	17048	19618	-173239	34,097	41,936	9,103	291,296	1341,952	34,097	9,103	41,936						
	150C1F1	4263	6386	48497	0	0	0	4,263	6,386	48,497	2376,353	336,3605	4,263	48,497	6,386						
	150C1F2	4262	6025	47175	0	0	0	4,262	6,025	47,175	1910,588	267,4535	4,262	47,175	6,025						
	150C1F3	4262	5579	45585	0	0	0	4,262	5,579	45,585	1458,72	201,969	4,262	45,585	5,579						
1b	Comp. gl	4615	2839	45615	4615	2696	-45453	9,23	5,535	0,162	3,969	154,529	9,23	0,162	5,535	1b	5306,189	3261,686	128,673	130,93	78,899
Wind, -20	GW / opgv	2225	1592	22556	2225	1487	-22383	4,45	3,079	0,173	9,93539	180,209	4,45	0,173	3,079	Wind angle: -45 dgr					
Permaner	380C1F1	17036	10925	172082	17036	10347	-171387	34,072	21,272	0,695	34,055	1042,328	34,072	0,695	21,272						
Wind angl	380C1F2	17036	10669	171760	17036	10135	-171160	34,072	20,804	0,6	24,3	842,562	34,072	0,6	20,804						
	380C1F3	17036	10352	171392	17036	9871	-170900	34,072	20,223	0,492	15,744	647,136	34,072	0,492	20,223						
	150C1F1	4259	2731	43020	0	0	0	4,259	2,731	43,02	2107,98	157,2435	4,259	43,02	2,731						
	150C1F2	4259	2667	42940	0	0	0	4,259	2,667	42,94	1739,07	131,438	4,259	42,94	2,667						
	150C1F3	4259	2588	42848	0	0	0	4,259	2,588	42,848	1371,136	106,2405	4,259	42,848	2,588						
3	Comp. gl	18677	9793	124681	18677	9067	-124021	37,354	18,86	0,66	16,17	538,6457	37,354	0,66	18,86	3	7808,023	6508,904	254,139	192,483	157,531
Wind+ice,	GW / opgv	9245	5879	63076	9245	5348	-62397	18,49	11,227	0,679	38,99497	658,819	18,49	0,679	11,227	Wind angle: -45 dgr					
Permaner	380C1F1	29378	20335	247325	29377	18695	-244780	58,755	39,03	2,545	124,705	1912,47	58,755	2,545	39,03						
Wind angl	380C1F2	29377	19609	246151	29377	18091	-243941	58,754	37,7	2,21	89,505	1526,85	58,754	2,21	37,7						
0	380C1F3	29377	18708	244799	29377	17343	-242979	58,754	36,051	1,82	58,24	1153,632	58,754	1,82	36,051						
	150C1F1	7344	5084	61831	0	0	0	7,344	5,084	61,831	3029,719	289,508	7,344	61,831	5,084						
	150C1F2	7344	4902	61538	0	0	0	7,344	4,902	61,538	2492,289	238,923	7,344	61,538	4,902						
	150C1F3	7344	4677	61200	0	0	0	7,344	4,677	61,2	1958,4	190,056	7,344	61,2	4,677						
4	Comp. gl	6122	3103	51659	6122	2963	-51551	12,244	6,066	0,108	2,646	173,7172	12,244	0,108	6,066	4	5329,651	3327,565	153,557	131,529	80,145
Constructi	GW / opgv	2978	1716	25392	2978	1614	-25277	5,956	3,33	0,115	6,60445	195,7685	5,956	0,115	3,33	Wind angle: -45 dgr					
Permaner	380C1F1	20053	10988	173480	20053	10417	-172937	40,106	21,405	0,543	26,607	1048,845	40,106	0,543	21,405						
Wind angl	380C1F2	20053	10735	173228	20053	10206	-172760	40,106	20,941	0,468	18,954	848,1105	40,106	0,468	20,941						
	380C1F3	20053	10422	172941	20053	9945	-172558	40,106	20,367	0,383	12,256	651,744	40,106	0,383	20,367						
	150C1F1	5013	2747	43370	0	0	0	5,013	2,747	43,37	2125,13	162,1745	5,013	43,37	2,747						
	150C1F2	5013	2684	43307	0	0	0	5,013	2,684	43,307	1753,934	136,2735	5,013	43,307	2,684						
	150C1F3	5013	2605	43235	0	0	0	5,013	2,605	43,235	1383,52	110,9315	5,013	43,235	2,605						
1a	Comp. gl	3462	1394	31599	3462	1394	-31599	6,924	2,788	0	0	82,5002	6,924	0	2,788	1a	3549,501	1625,318	96,533	87,642	38,949
Wind, 10 (	GW / opgv	1669	675	15226	1669	675	-15226	3,338	1,35	0	0	80,06738	3,338	0	1,35	Wind angle: 0 dgr					
Permaner	380C1F1	12781	5162	116856	12781	5162	-116856	25,562	10,324	0	0	505,876	25,562	0	10,324						
Wind angl	380C1F2	12781	5158	116856	12781	5158	-116856	25,562	10,316	0	0	417,798	25,562	0	10,316						
	380C1F3	12781	5152	116856	12781	5152	-116856	25,562	10,304	0	0	329,728	25,562	0	10,304						
	150C1F1	3195	1290	29214	0	0	0	3,195	1,29	29,214	1431,486	80,7825	3,195	29,214	1,29						
	150C1F2	3195	1289	29214	0	0	0	3,195	1,289	29,214	1183,167	69,777	3,195	29,214	1,289						
	150C1F3	3195	1288	29214	0	0	0	3,195	1,288	29,214	934,848	58,7885	3,195	29,214	1,288						
1b	Comp. gl	3461	1578	36072	3461	1578	-36072	6,922	3,156	0	0	91,5121	6,922	0	3,156	1b	4168,665	1876,194	96,481	102,93	45,215
Wind, -20	GW / opgv	1668	769	17575	1668	769	-17575	3,336	1,538	0	0	90,8627	3,336	0	1,538	Wind angle: 0 dgr					
Permaner	380C1F1	12774	6004	137240	12774	6004	-137240	25,548	12,008	0	0	588,392	25,548	0	12,008						
Wind angl	380C1F2	12774	6003	137240	12774	6003	-137240	25,548	12,006	0	0	486,243	25,548	0	12,006						
	380C1F3	12774	6002	137240	12774	6002	-137240	25,548	12,004	0	0	384,128	25,548	0	12,004						
	150C1F1	3193	1501	34310	0	0	0	3,193	1,501	34,31	1681,19	91,1105	3,193	34,31	1,501						
	150C1F2	3193	1501	34310	0	0	0	3,193	1,501	34,31	1389,555	78,352	3,193	34,31	1,501						
	150C1F3	3193	1501	34310	0	0	0	3,193	1,501	34,31	1097,92	65,5935	3,193	34,31	1,501						
3	Comp. gl	17518	5120	116924	17518	5120	-116924	35,036	10,24	0	0	322,7038	35,036	0	10,24	3	6445,729	3273,339	221,891	159,154	78,08
Wind+ice,	GW / opgv	8685	2547	58078	8685	2547	-58078	17,37	5,094	0	0	305,7496	17,37	0	5,094	Wind angle: 0 dgr					
Permaner	380C1F1	25109	9298	212206	25109	9298	-212206	50,218	18,596	0	0	911,204	50,218	0	18,596						
Wind angl	380C1F2	25109	9296	212206	25109	9296	-212206	50,218	18,592	0	0	752,976	50,218	0	18,592						
	380C1F3	25109	9293	212206	25109	9293	-212206	50,218	18,586	0	0	594,752	50,218	0	18,586						
	150C1F1	6277	2325	53051	0	0	0	6,277	2,325	53,051	2599,499	148,4485	6,277	53,051	2,325						
	150C1F2	6277	2324	53051	0	0	0	6,277	2,324	53,051	2148,566	128,6455	6,277	53,051	2,324						
	150C1F3	6277	2323	53052	0	0	0	6,277	2,323	53,052	1697,664	108,8595	6,277	53,052	2,323						
4	Comp. gl	4966	1897	43378	4966	1897	-43378	9,932	3,794	0	0	113,3136	9,932	0	3,794	4	4314,344	1986,719	121,343	106,527	47,577
Constructi	GW / opgv	2421	926	21162	2421	926	-21162	4,842	1,852	0	0	110,0403	4,842	0	1,852	Wind angle: 0 dgr					
Permaner	380C1F1	15788	6213	142035	15788	6213	-142035	31,576	12,426	0	0	608,874	31,576	0	12,426						
Wind angl	380C1F2	15788	6212	142035	15788	6212	-142035	31,576	12,424	0	0	503,172	31,576	0	12,424						
	380C1F3	15788	6211	142035	15788	6211	-142035	31,576	12,422	0	0	397,504	31,576	0	12,422						
	150C1F1	3947	1553	35509	0	0	0	3,947	1,553	35,509	1739,941	97,8055	3,947	35,509	1,553						
	150C1F2	3947	1553	35509	0	0	0	3,947	1,553	35,509	1438,115	84,605	3,947	35,509	1,553						
	150C1F3	3947	1553	35509	0	0	0	3,947	1,553	35,509	1136,288	71,4045	3,947	35,509	1,553						
6	Comp. gl	3462	1380	31600	3462	1380	-31600	6,924	2,76	0	0	81,8142	6,924	0	2,76	6	3549,501	1608,27	96,533	87,642	38,53
Permaner	GW / opgv	1669	665	15226	1669	665	-15226	3,338	1,33	0	0	78,91878	3,338	0	1,33	0					
Permaner	380C1F1	12781	5102	116857	12781	5102	-116857	25,562	10,204	0	0	499,996	25,562	0	10,204						
	380C1F2	12781	5102	116857	12781	5102	-116857	25,562	10,204	0	0	413,262	25,562	0	10,204						
	380C1F3	12781	5102	116857	12781	5102	-116857	25,562	10,204	0	0	326,528	25,562	0	10,204						
	150C1F1	3195	1276	29214	0	0	0	3,195	1,276	29,214	1431,486	80,0965	3,195	29,214	1,276						
	150C1F2	3195	1276	29214	0	0	0	3,195	1,276	29,214	1183,167	69,2505	3,195	29,214	1,276						
	150C1F3	3195	1276	29214	0	0	0	3,195	1,276	29,214	934,848	58,4045	3,195	29,214	1,276						
1a	Comp. gl	3463	5412	42450	3463	6244	-45933	6,926	11,656	-3,483	-85,3335	299,7703	6,926	-3,483	11,656	1a	2978,286	6726,506	96,565	73,295	164,257
Wind, 10 (	GW / opgv	1670	3641	24937	1670	4246	-27635	3,34	7,887	-2,698	-154,946	455,4888	3,34	-2,698	7,887	Wind angle: 45 dgr					
Permaner	380C1F1	12785	21402	161939	12786	24752	-175933	25,571	46,154	-13,994	-685,706	2261,546	25,571	-13,994	46,154						
Wind angl	380C1F2	12785	20168	156922	12786	23270	-169684	25,571	43,438	-12,762	-516,861	1759,239	25,571	-12,762	43,438						
	380C1F3	12784	18639	150855	12785	21430	-162053	25,569	40,069	-11,198	-358,336	1282,208	25,569	-11,198	40,069						
	150C1F1	3196	5351	40485	0	0	0	3,196	5,351	40,485	1983,765	279,777	3,196	40,485	5,351						
	150C1F2	3196	5042	39231	0	0	0	3,196	5,042	39,231	1588,856	221,779	3,196	39,231	5,042						
	150C1F3	3196	4660	37714	0	0	0	3,196	4,66	37,714	1206,848	166,698	3,196	37,714	4,66						
1b	Comp. gl	3461	2310	36628	3461	2457	-36863	6,922	4,767	-0,235	-5,7575	130,9816	6,922	-0,235	4,767	1b	4104,759	2803,893	96,484	101,386	68,015
Wind, -20	GW / opgv	1668	1304	18177	1668	1412	-18423	3,336	2,716	-0,246	-14,1278	158,5152	3,336	-0,246	2,716	Wind angle: 45 dgr					
Permaner	380C1F1	12774	8961	139641	12774	9552	-140651	25,548	18,513	-1,01	-49,49	907,137	25,548	-1,01	18,513						
Wind angl	380C1F2	12774	8744	139310	12774	9290	-140184	25,548	18,034	-0,874	-35,397	730,377	25,548	-0,874	18,034						
	380C1F3	12774	8474	138930	12774	8966	-139649	25,548	17,44	-0,719	-23,008	558,08	25,548	-0,719	17,44						
	150C1F1	3194	2240	34910	0	0	0	3,194	2,24	34,91	1710,59	127,327	3,194	34,91	2,24						
	150C1F2	3194	2186	34827	0	0	0	3,194	2,186	34,827	1410,494	106,1	3,194	34,827	2,186						
	150C1F3	3194	2119	34733	0	0	0	3,194	2,119	34,733	1111,456	85,375	3,194	34,733	2,119						
3	Comp. gl	17518	8829	118590	17519	9558	-119308	35,037	18,387	-0,718	-17,591	522,3074	35,037	-0,718	18,387	3	6255,846	6116,105	221,901	154,554	148,316
Wind+ice,	GW / opgv	8686	5236	59842	8686	5770	-60575	17,372	11,006	-0,733	-42,0962	645,2773	17,372	-0,733	11,006	Wind angle: 45 dgr					
Permaner	380C1F1	25110	17599	219715	25111	19263	-222795	50,221	36,862	-3,08	-150,92	1806,238	50,221	-3,08	36,862						
Wind angl	380C1F2	25110	16988	218696	25110	18525	-221377	50,22	35,513	-2,681	-108,581	1438,277	50,22	-2,681	35,513						
	380C1F3	25110	16230	217522	25110	17613	-219739	50,22	33,843	-2,217	-70,944	1082,976	50,22	-2,217	33,843						
	150C1F1	6277	4400	54929	0	0	0	6,277	4,4	54,929	2691,521	250,1235	6,277	54,929	4,4						
	150C1F2	6277	4247	54674	0	0	0	6,277	4,247	54,674	2214,297	206,527	6,277	54,674	4,247						
	150C1F3	6277	4058	54380	0	0	0	6,277	4,058	54,38	1740,16	164,3795	6,277	54,38	4,058						
4	Comp. gl	4966	2620	43705	4966	2762	-43847	9,932	5,382	-0,142	-3,479	152,2196	9,932	-0,142	5,382	4	4269,16	2904,512	121,343	105,436	70,139
Constructi	GW / opgv	2421	1450	21516	2421	1554	-21666	4,842	3,004	-0,15	-8,6145	176,1996	4,842	-0,15	3,004	Wind angle: 45 dgr					
Permaner	380C1F1	15788	9142	143762	15788	9722	-144502	31,576	18,864	-0,74	-36,26	924,336	31,576	-0,74	18,864						
Wind angl	380C1F2	15788	8929	143520	15788	9465	-144160	31,576	18,394	-0,64	-25,92	744,957	31,576	-0,64	18,394						
	380C1F3	15788	8664	143244	15788	9147	-143768	31,576	17,811	-0,524	-16,768	569,952	31,576	-0,524	17,811						
	150C1F1	3947	2286	35941	0	0	0	3,947	2,286	35,941	1761,109	133,7225	3,947	35,941	2,286						
	150C1F2	3947	2232	35880	0	0	0	3,947	2,232	35,88	1453,14	112,1045	3,947	35,88	2,232						
	150C1F3	3947	2166	35811	0	0	0	3,947	2,166	35,811	1145,952	91,0205	3,947	35,811	2,166						
1a	Comp. gl	3465	10636	65268	3465	10636	-65268	6,93	21,272	0	0	535,3705	6,93	0	21,272	1a	7317,42	12326,63	96,618	179,291	301,965
Wind, 10 (	GW / opgv	1671	7394	41430	1671	7394	-41430	3,342	14,788	0	0	851,8148	3,342	0	14,788	Wind angle: 90 dgr					
Permaner	380C1F1	12793	42353	251764	12793	42353	-251764	25,586	84,706	0	0	4150,594	25,586	0	84,706						
Wind angl	380C1F2	12792	39619	240051	12792	39619	-240051	25,584	79,238	0	0	3209,139	25,584	0	79,238						
	380C1F3	12791	36208	225349	12791	36208	-225349	25,582	72,416	0	0	2317,312	25,582	0	72,416						
	150C1F1	3198	10588	62941	0	0	0	3,198	10,588	62,941	3084,109	536,401	3,198	62,941	10,588						
	150C1F2	3198	9905	60013	0	0	0	3,198	9,905	60,013	2430,527	418,7415	3,198	60,013	9,905						
	150C1F3	3198	9052	56337	0	0	0	3,198	9,052	56,337	1802,784	307,253	3,198	56,337	9,052						
1b	Comp. gl	3461	3244	38683	3461	3244	-38683	6,922	6,488	0	0	173,1461	6,922	0	6,488	1b	4467,415	3813,535	96,492	110,142	92,804
Wind, -20	GW / opgv	1669	1999	20240	1669	1999	-20240	3,338	3,998	0	0	232,142	3,338	0	3,998	Wind angle: 90 dgr					
Permaner	380C1F1	12775	12742	148385	12775	12742	-148385	25,55	25,484	0	0	1248,716	25,55	0	25,484						
Wind angl	380C1F2	12775	12235	146935	12775	12235	-146935	25,55	24,47	0	0	991,035	25,55	0	24,47						
	380C1F3	12775	11609	145249	12775	11609	-145249	25,55	23,218	0	0	742,976	25,55	0	23,218						
	150C1F1	3194	3185	37096	0	0	0	3,194	3,185	37,096	1817,704	173,632	3,194	37,096	3,185						
	150C1F2	3194	3059	36734	0	0	0	3,194	3,059	36,734	1487,727	141,4565	3,194	36,734	3,059						
	150C1F3	3194	2902	36312	0	0	0	3,194	2,902	36,312	1161,984	110,431	3,194	36,312	2,902						
3	Comp. gl	17521	13438	124881	17521	13438	-124881	35,042	26,876	0	0	730,2981	35,042	0	26,876	3	7338,821	9194,468	221,939	180,737	224,278
Wind+ice,	GW / opgv	8689	8620	65994	8689	8620	-65994	17,378	17,24	0	0	1003,3	17,378	0	17,24	Wind angle: 90 dgr					
Permaner	380C1F1	25115	28222	245324	25115	28222	-245324	50,23	56,444	0	0	2765,756	50,23	0	56,444						
Wind angl	380C1F2	25114	26803	241229	25114	26803	-241229	50,228	53,606	0	0	2171,043	50,228	0	53,606						
	380C1F3	25113	25047	236395	25113	25047	-236395	50,226	50,094	0	0	1603,008	50,226	0	50,094						
	150C1F1	6279	7055	61331	0	0	0	6,279	7,055	61,331	3005,219	380,2295	6,279	61,331	7,055						
	150C1F2	6278	6701	60307	0	0	0	6,278	6,701	60,307	2442,434	305,9195	6,278	60,307	6,701						
	150C1F3	6278	6262	59099	0	0	0	6,278	6,262	59,099	1891,168	234,913	6,278	59,099	6,262						
4	Comp. gl	4966	3520	44981	4966	3520	-44981	9,932	7,04	0	0	192,8406	9,932	0	7,04	4	4535,128	3887,409	121,347	111,854	94,279
Constructi	GW / opgv	2421	2113	22829	2421	2113	-22829	4,842	4,226	0	0	246,3791	4,842	0	4,226	Wind angle: 90 dgr					
Permaner	380C1F1	15789	12829	150295	15789	12829	-150295	31,578	25,658	0	0	1257,242	31,578	0	25,658						
Wind angl	380C1F2	15789	12337	149195	15789	12337	-149195	31,578	24,674	0	0	999,297	31,578	0	24,674						
	380C1F3	15788	11729	147922	15788	11729	-147922	31,576	23,458	0	0	750,656	31,576	0	23,458						
	150C1F1	3947	3207	37574	0	0	0	3,947	3,207	37,574	1841,126	178,8515	3,947	37,574	3,207						
	150C1F2	3947	3084	37299	0	0	0	3,947	3,084	37,299	1510,61	146,6105	3,947	37,299	3,084						
	150C1F3	3947	2932	36981	0	0	0	3,947	2,932	36,981	1183,392	115,5325	3,947	36,981	2,932						
1a	Comp. gl	3463	6244	45933	3463	5412	-42450	6,926	11,656	3,483	85,3335	299,7703	6,926	3,483	11,656	1a	6970,816	6821,248	96,566	171,052	166,567
Wind, 10 (	GW / opgv	1670	4246	27635	1670	3641	-24937	3,34	7,887	2,698	154,9461	455,4888	3,34	2,698	7,887	Wind angle: -45 dgr					
Permaner	380C1F1	12786	24752	175933	12785	21402	-161939	25,571	46,154	13,994	685,706	2261,546	25,571	13,994	46,154						
Wind angl	380C1F2	12786	23270	169684	12785	20168	-156922	25,571	43,438	12,762	516,861	1759,239	25,571	12,762	43,438						
	380C1F3	12785	21430	162053	12784	18639	-150855	25,569	40,069	11,198	358,336	1282,208	25,569	11,198	40,069						
	150C1F1	3197	6188	43983	0	0	0	3,197	6,188	43,983	2155,167	320,7955	3,197	43,983	6,188						
	150C1F2	3196	5817	42421	0	0	0	3,196	5,817	42,421	1718,051	253,1665	3,196	42,421	5,817						
	150C1F3	3196	5358	40513	0	0	0	3,196	5,358	40,513	1296,416	189,034	3,196	40,513	5,358						
1b	Comp. gl	3461	2457	36863	3461	2310	-36628	6,922	4,767	0,235	5,7575	130,9816	6,922	0,235	4,767	1b	4387,314	2820,557	96,484	108,205	68,421
Wind, -20	GW / opgv	1668	1412	18423	1668	1304	-18177	3,336	2,716	0,246	14,12778	158,5152	3,336	0,246	2,716	Wind angle: -45 dgr					
Permaner	380C1F1	12774	9552	140651	12774	8961	-139641	25,548	18,513	1,01	49,49	907,137	25,548	1,01	18,513						
Wind angl	380C1F2	12774	9290	140184	12774	8744	-139310	25,548	18,034	0,874	35,397	730,377	25,548	0,874	18,034						
	380C1F3	12774	8966	139649	12774	8474	-138930	25,548	17,44	0,719	23,008	558,08	25,548	0,719	17,44						
	150C1F1	3194	2388	35163	0	0	0	3,194	2,388	35,163	1722,987	134,579	3,194	35,163	2,388						
	150C1F2	3194	2322	35046	0	0	0	3,194	2,322	35,046	1419,363	111,608	3,194	35,046	2,322						
	150C1F3	3194	2241	34912	0	0	0	3,194	2,241	34,912	1117,184	89,279	3,194	34,912	2,241						
3	Comp. gl	17519	9558	119308	17518	8829	-118590	35,037	18,387	0,718	17,591	522,3074	35,037	0,718	18,387	3	7118,735	6163,092	221,903	175,407	149,461
Wind+ice,	GW / opgv	8686	5770	60575	8686	5236	-59842	17,372	11,006	0,733	42,09619	645,2773	17,372	0,733	11,006	Wind angle: -45 dgr					

Permaner	380C1F1	25111	19263	222795	25110	17599	-219715	50,221	36,862	3,08	150,92	1806,238	50,221	3,08	36,862						
Wind angl	380C1F2	25110	18525	221377	25110	16988	-218696	50,22	35,513	2,681	108,5805	1438,277	50,22	2,681	35,513						
0	380C1F3	25110	17613	219739	25110	16230	-217522	50,22	33,843	2,217	70,944	1082,976	50,22	2,217	33,843						
	150C1F1	6278	4816	55699	0	0	0	6,278	4,816	55,699	2729,251	270,513	6,278	55,699	4,816						
	150C1F2	6278	4631	55344	0	0	0	6,278	4,631	55,344	2241,432	222,0845	6,278	55,344	4,631						
	150C1F3	6277	4403	54935	0	0	0	6,277	4,403	54,935	1757,92	175,4195	6,277	54,935	4,403						
4	Comp. gl	4966	2762	43847	4966	2620	-43705	9,932	5,382	0,142	3,479	152,2196	9,932	0,142	5,382	4	4470,98	2920,916	121,343	110,304	70,539
Constructi	GW / opgv	2421	1554	21666	2421	1450	-21516	4,842	3,004	0,15	8,6145	176,1996	4,842	0,15	3,004	Wind angle:	-45 dgr				
Permaner	380C1F1	15788	9722	144502	15788	9142	-143762	31,576	18,864	0,74	36,26	924,336	31,576	0,74	18,864						
Wind angl	380C1F2	15788	9465	144160	15788	8929	-143520	31,576	18,394	0,64	25,92	744,957	31,576	0,64	18,394						
	380C1F3	15788	9147	143768	15788	8664	-143244	31,576	17,811	0,524	16,768	569,952	31,576	0,524	17,811						
	150C1F1	3947	2431	36126	0	0	0	3,947	2,431	36,126	1770,174	140,8275	3,947	36,126	2,431						
	150C1F2	3947	2366	36040	0	0	0	3,947	2,366	36,04	1459,62	117,5315	3,947	36,04	2,366						
	150C1F3	3947	2287	35942	0	0	0	3,947	2,287	35,942	1150,144	94,8925	3,947	35,942	2,287						

W4H400ZF25-AK1

Hoogte mast	Ber & bijlage	58 m		
Hoogte onderste stroomdraad (F3)		32 m		
		Hoogte		Excentriciteit ophanging t.o.v. hart mast
Bliksemdraad = GW / (H_{mast} -	0,57 m =	57,43 m		0,76 m
1e traverse - 380C1F1 F2 +	8,5 m =	49 m		0 m
1e traverse - 150C1F1		49		5,5 m
2e traverse - 380C1F2 F3 +	8,5 m =	40,5 m		0 m
2e traverse - 150C1F2 F3 +		40,5 m		5,5 m
3e traverse - 380C1F3		32 m		0 m
3e traverse - 150C1F3		32		5,5 m
Passieve lijn = Comp C F3 -	7,5 m =	24,5 m		2,05 m

Uit mast (excl belastingsfactoren)			Uit lijnen (incl belastingsfactoren)				
N	V	M	Nmin	Nmax	Vmax	Mlangs;ma	Mdwars;max
[kN]	[kN]	[kNm]	[kN]	[kN]	[kN]	[kNm]	[kNm]
857	115	3123					
857	115	3123	43	157	880	35215	7343

			Belastingen uit lijnen					Belasting uit mast		
			M_{langs}	M_{dwars}	N	V_{langs}	V_{dwars}	N	V	M
Perm load 1,2	0 deg	1a		4489	2049	129	111	857	115	3123
		1b		5157	2328	129	127	857	22	586
			3	5383	2536	157	133	857	32	878
			4	5092	2338	149	126	857	22	586
			6	4934	2245	145	122	54		
	45 deg	1a		4247	4522	129	105	110	857	115
		1b		5127	3057	129	127	74	857	22
			3	5168	4832	157	128	117	857	32
			4	5068	3064	149	125	74	857	22
	90 deg	1a		5652	7262	129	139	177	857	115
		1b		5290	3831	129	131	93	857	22
			3	6162	7343	157	152	179	857	32
			4	5200	3828	149	128	93	857	22
	-45 deg	1a		5399	4567	129	133	111	857	115
		1b		5252	3070	129	130	74	857	22
			3	6021	4870	157	148	118	857	32
			4	5167	3077	149	128	74	857	22
	0 deg	1a		3550	1617	97	88	39	643	115
		1b		4169	1876	96	103	45	643	22
			3	4465	2118	125	110	51	643	32
			4	4182	1920	116	103	46	643	22
			6	3550	1608	97	88	39		
	45 deg	1a		3248	4148	97	80	101	643	115
		1b		4127	2612	96	102	63	643	22
			3	4202	4448	125	104	108	643	32
			4	4151	2651	116	103	64	643	22
	90 deg	1a		5058	6983	97	124	171	643	115
		1b		4363	3405	96	108	83	643	22
			3	5473	7028	125	135	172	643	32
			4	4331	3429	116	107	83	643	22
	-45 deg	1a		4782	4195	97	118	102	643	115
		1b		4309	2625	96	106	64	643	22
			3	5300	**4487**	**125**	130	**109**	643	32
			4	**4287**	2664	116	**106**	64	643	22
	0 deg	1a		24541	**1158**	71	614	**27**	857	115
		1b		28150	1312	**71**	704	31	857	22
			3	30273	1427	86	760	33	857	32
			4	28044	1320	82	702	31	857	22
			6	26980	1270	80	675	29		
	45 deg	1a		26140	2402	71	652	57	857	115
		1b		28306	1680	**71**	707	40	857	22
			3	31414	2573	86	787	62	857	32
			4	28165	1687	82	705	40	857	22
	90 deg	1a		31152	4021	71	774	97	857	115
		1b		28919	2137	**71**	722	51	857	22
			3	**35215**	4045	86	**880**	98	857	32
			4	28657	2139	82	717	51	857	22
	-45 deg	1a		26772	2655	71	668	64	857	115
		1b		28374	1752	71	709	42	857	22
			3	31877	2803	86	798	67	857	32
			4	28220	1759	82	706	41	857	22
	0 deg	1a		19396	913	53	485	21	643	115
		1b		22736	1055	53	568	25	643	22
			3	25290	1189	68	635	28	643	32
			4	23073	1083	64	578	25	643	22
			6	19396	908	53	485	21		
	45 deg	1a		21632	2185	53	539	53	643	115
		1b		22970	1426	53	574	34	643	22
			3	26804	2351	68	672	57	643	32
			4	23245	1452	64	582	34	643	22
	90 deg	1a		27933	3860	53	693	94	643	115
		1b		23852	1895	53	595	45	643	22
			3	31535	3864	68	787	94	643	32
			4	23915	1911	64	598	46	643	22
	-45 deg	1a		22473	2447	53	560	59	643	115
		1b		23070	1500	53	576	36	643	22
			3	27401	2587	68	686	62	643	32
			4	23320	1524	64	584	36	643	22
	0 deg	1a		-20052	891	58	-503	22	857	115
		1b		-22993	1016	58	-576	25	857	22
			3	-24889	1109	71	-627	27	857	32
			4	-22952	1017	67	-576	25	857	22
			6	-22046	975	65	-553	24		
	45 deg	1a		-21893	2120	58	-547	52	857	115
		1b		-23178	1378	58	-581	34	857	22
			3	-26246	2259	71	-659	56	857	32
			4	-23097	1377	67	-580	34	857	22
	90 deg	1a		-25500	3241	58	-635	80	857	115
		1b		-23628	1694	58	-592	42	857	22
			3	-29053	3297	71	-728	82	857	32
			4	-23457	1689	67	-588	42	857	22
	-45 deg	1a		-21372	1912	58	-535	47	857	115
		1b		-23122	1318	58	-579	33	857	22
			3	-25856	2067	71	-650	51	857	32
			4	-23052	1318	67	-579	33	857	22
	0 deg	1a		-15847	704	43	-397	17	643	115
		1b		-18568	820	43	-465	20	643	22
			3	-20826	929	56	-525	23	643	32
			4	-18891	837	52	-474	21	643	22
			6	-15847	700	43	-397	17		
	45 deg	1a		-18384	1963	43	-459	48	643	115
		1b		-18843	1185	43	-472	29	643	22
			3	-22602	2097	56	-568	52	643	32
			4	-19094	1199	52	-479	30	643	22
	90 deg	1a		-22876	3124	43	-569	77	643	115
		1b		-19489	1510	43	-488	37	643	22
			3	-26062	3163	56	-652	78	643	32
			4	-19584	1517	52	-491	37	643	22
	-45 deg	1a		-17691	1748	43	-442	43	643	115
		1b		-18761	1125	43	-470	28	643	22
			3	-22101	1900	56	-556	47	643	32
			4	-19033	1140	52	-478	28	643	22
	0 deg	1a		-6345	1539	101	-133	38	857	115
		1b		-7247	1751	101	-152	44	857	22
			3	-8452	1884	120	-184	47	857	32
			4	-7404	1751	116	-157	44	857	22
			6	-6980	1686	113	-147	42		
	45 deg	1a		-7394	3422	101	-157	86	857	115
		1b		-7356	2307	101	-154	58	857	22
			3	-9311	3588	120	-203	90	857	32
			4	-7489	2304	116	-159	58	857	22
	90 deg	1a		-8459	5393	101	-177	136	857	115
		1b		-7503	2863	101	-157	72	857	22
			3	-10392	5336	120	-226	135	857	32
			4	-7603	2854	116	-161	72	857	22
	-45 deg	1a		-6557	3347	101	-136	84	857	115
		1b		-7266	2285	101	-152	57	857	22
			3	-8716	3506	120	-188	88	857	32
			4	-7417	2283	116	-157	57	857	22
	0 deg	1a		-5008	1215	75	-105	30	643	115
		1b		-5839	1412	75	-122	35	643	22

				Totaal						
regel		Loadcase	M_{langs}	M_{dwars}	N	V_{langs}	V_{dwars}	Totaal moment		
1	Perm load 1,2	0 deg	1a	7612	2049	986	226	49	7882,79	1
2	Perm load 1,2	0 deg	1b	5742	2328	986	149	56	6196,415	2
3	Perm load 1,2	0 deg	3	6262	2536	1014	165	61	6755,765	3
4	Perm load 1,2	0 deg	4	5677	2338	1006	147	56	6139,707	4
5	Perm load 1,2	0 deg	6							5
6										6
7	Perm load 1,2	45 deg	1a	6455	6730	986	186	191	9325,192	7
8	Perm load 1,2	45 deg	1b	5542	3472	986	142	89	6539,147	8
9	Perm load 1,2	45 deg	3	5789	5453	1014	151	140	7952,945	9
10	Perm load 1,2	45 deg	4	5482	3478	1006	140	89	6492,691	10
11										11
12	Perm load 1,2	90 deg	1a	5652	10385	986	139	292	11823,43	12
13	Perm load 1,2	90 deg	1b	5290	4416	986	131	114	6891,391	13
14	Perm load 1,2	90 deg	3	6162	8221	1014	152	212	10274,08	14
15	Perm load 1,2	90 deg	4 Construc	5200	4414	1006	128	114	6820,789	15
16										16
17	Perm load 1,2	-45 deg	1a	7608	6775	986	214	192	10187,24	17
18	Perm load 1,2	-45 deg	1b	5666	3484	986	145	89	6651,613	18
19	Perm load 1,2	-45 deg	3	6642	5491	1014	171	141	8617,965	19
20	Perm load 1,2	-45 deg	4	5582	3491	1006	143	89	6583,328	20
21										21
22	Perm load 0,9	0 deg	1a	6673	1617	739	203	39	6865,65	22
23	Perm load 0,9	0 deg	1b	4754	1876	739	124	45	5110,804	23
24	Perm load 0,9	0 deg	3	5343	2118	767	143	51	5747,54	24
25	Perm load 0,9	0 deg	4	4767	1920	759	125	46	5139,678	25
26	Perm load 0,9	0 deg	6							26
27										27
28	Perm load 0,9	45 deg	1a	5456	6356	739	162	182	8376,628	28
29	Perm load 0,9	45 deg	1b	4541	3026	739	117	79	5456,878	29
30	Perm load 0,9	45 deg	3	4823	5069	767	127	131	6997,109	30
31	Perm load 0,9	45 deg	4 Construc	4565	3065	759	118	79	5498,511	31
32										32
33	Perm load 0,9	90 deg	1a	5058	10106	739	124	286	11301,2	33
34	Perm load 0,9	90 deg	1b	4363	3991	739	108	104	5912,898	34
35	Perm load 0,9	90 deg	3	5473	7906	767	135	204	9615,32	35
36	Perm load 0,9	90 deg	4	4331	4014	759	107	105	5905,623	36
37										37
38	Perm load 0,9	-45 deg	1a	6990	6403	739	199	183	9479,723	38
39	Perm load 0,9	-45 deg	1b	4723	3039	739	122	79	5616,376	39
40	Perm load 0,9	-45 deg	3	5922	5108	767	153	132	7820,205	40
41	Perm load 0,9	-45 deg	4	4701	3078	759	121	80	5619,391	41
42										42
43	Perm load 1,2	0 deg	1a	27664	1158	928	729	27	27688,59	43
44	Perm load 1,2	0 deg	1b	28736	1312	928	725	31	28765,5	44
45	Perm load 1,2	0 deg	3	31151	1427	943	792	33	31183,8	45
46	Perm load 1,2	0 deg	4	28629	1320	939	723	31	28659,6	46
47	Perm load 1,2	0 deg	6							47
48										48
49	Perm load 1,2	45 deg	1a	28348	4610	928	734	139	28720,56	49
50	Perm load 1,2	45 deg	1b	28720	2094	928	723	55	28796,08	50
51	Perm load 1,2	45 deg	3	32035	3194	943	810	84	32194,11	51
52	Perm load 1,2	45 deg	4	28580	2101	939	720	55	28656,63	52
53										53
54	Perm load 1,2	90 deg	1a	31152	7144	928	774	212	31960,65	54
55	Perm load 1,2	90 deg	1b	28919	2723	928	722	73	29046,5	55
56	Perm load 1,2	90 deg	3	35215	4924	943	880	130	35557,66	56 x x x
57	Perm load 1,2	90 deg	4 Construc	28657	2725	939	717	72	28786,57	57
58										58
59	Perm load 1,2	-45 deg	1a	28980	4863	928	749	145	29385,02	59
60	Perm load 1,2	-45 deg	1b	28788	2166	928	724	57	28869,31	60
61	Perm load 1,2	-45 deg	3	32498	3424	943	821	90	32677,83	61
62	Perm load 1,2	-45 deg	4	28634	2173	939	721	57	28716,12	62
63										63
64	Perm load 0,9	0 deg	1a	22519	913	696	600	21	22537,6	64
65	Perm load 0,9	0 deg	1b	23322	1055	696	590	25	23345,84	65
66	Perm load 0,9	0 deg	3	26169	1189	711	667	28	26195,74	66
67	Perm load 0,9	0 deg	4	23659	1083	707	599	25	23683,64	67
68	Perm load 0,9	0 deg	6							68
69										69
70	Perm load 0,9	45 deg	1a	23840	4393	696	620	134	24241,34	70
71	Perm load 0,9	45 deg	1b	23384	1841	696	589	49	23456,35	71
72	Perm load 0,9	45 deg	3	27425	2972	711	695	79	27585,86	72
73	Perm load 0,9	45 deg	4 Construc	23659	1866	707	597	50	23732,85	73
74										74
75	Perm load 0,9	90 deg	1a	27933	6983	696	693	209	28792,91	75
76	Perm load 0,9	90 deg	1b	23852	2481	696	595	67	23980,27	76
77	Perm load 0,9	90 deg	3	31535	4742	711	787	126	31889,61	77
78	Perm load 0,9	90 deg	4	23915	2497	707	598	67	24045,3	78
79										79
80	Perm load 0,9	-45 deg	1a	24681	4655	696	641	140	25116,5	80
81	Perm load 0,9	-45 deg	1b	23484	1914	696	592	51	23561,72	81
82	Perm load 0,9	-45 deg	3	28022	3208	711	709	85	28205,22	82
83	Perm load 0,9	-45 deg	4	23734	1938	707	599	51	23813,26	83
84										84
85	Perm load 1,2	0 deg	1a	-16929	891	915	-388	22	16952,85	85
86	Perm load 1,2	0 deg	1b	-22408	1016	915	-555	25	22430,65	86
87	Perm load 1,2	0 deg	3	-24011	1109	928	-594	27	24036,76	87
88	Perm load 1,2	0 deg	4	-22366	1017	924	-555	25	22389,47	88
89	Perm load 1,2	0 deg	6							89
90										90
91	Perm load 1,2	45 deg	1a	24101	4328	915	629	134	24486,8	91
92	Perm load 1,2	45 deg	1b	23592	1792	915	596	49	23660,27	92
93	Perm load 1,2	45 deg	3	26867	2880	928	682	79	27021,12	93
94	Perm load 1,2	45 deg	4	23511	1791	924	595	49	23579,19	94
95										95
96	Perm load 1,2	90 deg	1a	-25500	6364	915	-635	195	26282,26	96
97	Perm load 1,2	90 deg	1b	-23628	2279	915	-592	63	23737,88	97
98	Perm load 1,2	90 deg	3	-29053	4175	928	-728	114	29351,37	98
99	Perm load 1,2	90 deg	4 Construc	-23457	2275	924	-588	63	23567,32	99
100										100
101	Perm load 1,2	-45 deg	1a	23580	4120	915	616	128	23937,65	101
102	Perm load 1,2	-45 deg	1b	23536	1732	915	595	48	23599,75	102
103	Perm load 1,2	-45 deg	3	26477	2688	928	673	74	26612,76	103
104	Perm load 1,2	-45 deg	4	23466	1732	924	594	48	23530,19	104
105										105
106	Perm load 0,9	0 deg	1a	-12724	704	686	-282	17	12743,08	106
107	Perm load 0,9	0 deg	1b	-17982	820	686	-444	20	18000,89	107
108	Perm load 0,9	0 deg	3	-19947	929	699	-493	23	19968,93	108
109	Perm load 0,9	0 deg	4	-18306	837	695	-453	21	18324,98	109
110	Perm load 0,9	0 deg	6							110
111										111
112	Perm load 0,9	45 deg	1a	20592	4172	686	540	130	21010,78	112
113	Perm load 0,9	45 deg	1b	19257	1599	686	487	45	19323,58	113
114	Perm load 0,9	45 deg	3	23223	2718	699	591	75	23381,55	114
115	Perm load 0,9	45 deg	4 Construc	19509	1614	695	494	45	19575,15	115
116										116
117	Perm load 0,9	90 deg	1a	-22876	6247	686	-569	192	23713,04	117
118	Perm load 0,9	90 deg	1b	-19489	2095	686	-488	59	19600,88	118
119	Perm load 0,9	90 deg	3	-26062	4042	699	-652	111	26373,74	119
120	Perm load 0,9	90 deg	4	-19584	2103	695	-491	59	19696,44	120
121										121
122	Perm load 0,9	-45 deg	1a	19899	3957	686	523	124	20288,85	122
123	Perm load 0,9	-45 deg	1b	19175	1539	686	485	43	19236,48	123
124	Perm load 0,9	-45 deg	3	22722	2521	699	579	70	22861,07	124
125	Perm load 0,9	-45 deg	4	19447	1554	695	493	43	19508,94	125
126										126
127	Perm load 1,2	0 deg	1a	-3222	1539	958	-18	38	3570,959	127
128	Perm load 1,2	0 deg	1b	-6661	1751	958	-130	44	6887,79	128
129	Perm load 1,2	0 deg	3	-7573	1884	977	-151	47	7804,006	129
130	Perm load 1,2	0 deg	4	-6819	1751	973	-136	44	7040,037	130
131	Perm load 1,2	0 deg	6							131
132										132
133	Perm load 1,2	45 deg	1a	9603	5630	958	238	167	11131,38	133
134	Perm load 1,2	45 deg	1b	7770	2721	958	170	73	8232,505	134
135	Perm load 1,2	45 deg	3	9932	4209	977	226	113	10787,27	135
136	Perm load 1,2	45 deg	4	7903	2718	973	174	73	8357,296	136
137										137
138	Perm load 1,2	90 deg	1a	-8459	8516	958	-177	251	12003,69	138
139	Perm load 1,2	90 deg	1b	-7503	3449	958	-157	94	8257,932	139
140	Perm load 1,2	90 deg	3	-10392	6214	977	-226	167	12107,94	140
141	Perm load 1,2	90 deg	4 Construc	-7603	3439	973	-161	93	8344,671	141
142										142
143	Perm load 1,2	-45 deg	1a	8765	5555	958	217	166	10377,59	143
144	Perm load 1,2	-45 deg	1b	7680	2699	958	167	73	8140,786	144
145	Perm load 1,2	-45 deg	3	9337	4127	977	211	111	10208,22	145
146	Perm load 1,2	-45 deg	4	7831	2697	973	172	72	8282,474	146
147										147
148	Perm load 0,9	0 deg	1a	-1885	1215	718	10	30	2242,922	148
149	Perm load 0,9	0 deg	1b	-5253	1412	718	-101	35	5439,631	149

samenvattting

Mast	Bijlage	Wind	Loadcase	M_{langs}	M_{dwars}	N	V_{langs}	V_{dwars}
12 W4H400ZF25-AK1	Perm load	90 deg	1a	5652	10385	986	139	292
14 W4H400ZF25-AK1	Perm load	90 deg	3	6162	8221	1014	152	212
56 W4H400ZF25-AK1	Perm load	90 deg	3	35215	4924	943	880	130

		3	-7193	1569	95	-157	39	643	32	878
		4	-6122	1437	90	-130	36	643	22	586
		6	-5008	1209	75	-105	30			
45 deg	1a		-6432	3143	75	-137	79	643	115	3123
	1b		-6000	1973	75	-126	50	643	22	586
		3	-8291	3299	95	-182	83	643	32	878
		4	-6239	1994	90	-133	50	643	22	586
90 deg	1a		-7692	5183	75	-161	131	643	115	3123
	1b		-6208	2543	75	-130	64	643	22	586
		3	-9541	5097	95	-208	129	643	32	878
		4	-6390	2554	90	-136	64	643	22	586
-45 deg	1a		-5313	3065	75	-109	77	643	115	3123
	1b		-5868	1951	75	-123	49	643	22	586
		3	-7517	3216	95	-163	81	643	32	878
		4	-6140	1973	90	-130	49	643	22	586
0 deg	1a		-9218	1401	86	-259	33	857	115	3123
	1b		-10589	1593	86	-297	37	857	22	586
		3	-11055	1762	107	-310	41	857	32	878
		4	-10456	1605	100	-293	38	857	22	586
		6	-10132	1534	97	-284	36			
45deg	1a		-10252	3219	86	-285	76	857	115	3123
	1b		-10695	2128	86	-300	50	857	22	586
		3	-11767	3503	107	-329	83	857	32	878
		4	-10540	2138	100	-296	50	857	22	586
90 deg	1a		-11389	5110	86	-319	121	857	115	3123
	1b		-10834	2661	86	-304	63	857	22	586
		3	-12499	5304	107	-350	126	857	32	878
		4	-10654	2664	100	-299	63	857	22	586
-45 deg	1a		-9416	3132	86	-266	74	857	115	3123
	1b		-10604	2103	86	-298	49	857	22	586
		3	-11119	3430	107	-313	81	857	32	878
		4	-10468	2113	100	-294	50	857	22	586
0 deg	1a		-7289	1106	65	-204	26	643	115	3123
	1b		-8560	1284	65	-240	30	643	22	586
		3	-9168	1478	86	-257	35	643	32	878
		4	-8588	1320	78	-241	31	643	22	586
		6	-7289	1100	65	-205	26			
45 deg	1a		-8705	2969	65	-241	70	643	115	3123
	1b		-8717	1825	65	-244	43	643	22	586
		3	-10109	3246	86	-282	77	643	32	878
		4	-8705	1857	78	-244	44	643	22	586
90 deg	1a		-10126	4924	65	-283	116	643	115	3123
	1b		-8918	2372	65	-250	56	643	22	586
		3	-11048	5094	86	-309	121	643	32	878
		4	-8862	2392	78	-249	56	643	22	586
-45 deg	1a		-7595	2878	65	-215	68	643	115	3123
	1b		-8584	1799	65	-241	42	643	22	586
		3	-9283	3171	86	-262	75	643	32	878
		4	-8606	1831	78	-242	43	643	22	586

150	Perm load 0,9	0 deg	3	-6314	1569	738	-125	39	6506,239	150
151	Perm load 0,9	0 deg	4	-5536	1437	733	-109	36	5719,823	151
152	Perm load 0,9	0 deg	6							152
153										153
154	Perm load 0,9	45 deg	1a	8640	5351	718	219	160	10162,95	154
155	Perm load 0,9	45 deg	1b	6414	2387	718	141	65	6843,264	155
156	Perm load 0,9	45 deg	3	8912	3920	738	205	106	9735,848	156
157	Perm load 0,9	45 deg	4 Construc	6653	2408	733	148	65	7075,188	157
158										158
159	Perm load 0,9	90 deg	1a	-7692	8306	718	-161	246	11320,52	159
160	Perm load 0,9	90 deg	1b	-6208	3129	718	-130	86	6951,684	160
161	Perm load 0,9	90 deg	3	-9541	5975	738	-208	161	11258,13	161
162	Perm load 0,9	90 deg	4	-6390	3139	733	-136	86	7119,991	162
163										163
164	Perm load 0,9	-45 deg	1a	7522	5273	718	190	159	9186,139	164
165	Perm load 0,9	-45 deg	1b	6282	2365	718	138	64	6712,354	165
166	Perm load 0,9	-45 deg	3	8138	3837	738	186	104	8997,022	166
167	Perm load 0,9	-45 deg	4	6554	2387	733	146	65	6974,717	167
168										168
169	Perm load 1,2	0 deg	1a	-6095	1401	943	-144	33	6253,893	169
170	Perm load 1,2	0 deg	1b	-10004	1593	943	-276	37	10129,88	170
171	Perm load 1,2	0 deg	3	-10176	1762	964	-278	41	10327,64	171
172	Perm load 1,2	0 deg	4	-9870	1605	957	-272	38	9999,731	172
173	Perm load 1,2	0 deg	6							173
174										174
175	Perm load 1,2	45 deg	1a	12460	5428	943	367	157	13591,03	175
176	Perm load 1,2	45 deg	1b	11109	2542	943	315	65	11396,18	176
177	Perm load 1,2	45 deg	3	12388	4124	964	351	106	13056,34	177
178	Perm load 1,2	45 deg	4	10954	2552	957	311	65	11246,86	178
179										179
180	Perm load 1,2	90 deg	1a	-11389	8233	943	-319	236	14052,99	180
181	Perm load 1,2	90 deg	1b	-10834	3247	943	-304	84	11310,46	181
182	Perm load 1,2	90 deg	3	-12499	6182	964	-350	159	13944,34	182
183	Perm load 1,2	90 deg	4 Construc	-10654	3249	957	-299	84	11138,77	183
184										184
185	Perm load 1,2	-45 deg	1a	11624	5340	943	347	155	12791,79	185
186	Perm load 1,2	-45 deg	1b	11018	2517	943	313	65	11302	186
187	Perm load 1,2	-45 deg	3	11740	4051	964	336	104	12419,22	187
188	Perm load 1,2	-45 deg	4	10882	2527	957	309	65	11171,21	188
189										189
190	Perm load 0,9	0 deg	1a	-4166	1106	707	-89	26	4310,24	190
191	Perm load 0,9	0 deg	1b	-7975	1284	707	-219	30	8077,468	191
192	Perm load 0,9	0 deg	3	-8290	1478	728	-225	35	8420,706	192
193	Perm load 0,9	0 deg	4	-8002	1320	721	-219	31	8110,296	193
194	Perm load 0,9	0 deg	6							194
195										195
196	Perm load 0,9	45 deg	1a	10913	5177	707	323	152	12078,74	196
197	Perm load 0,9	45 deg	1b	9131	2239	707	259	58	9401,418	197
198	Perm load 0,9	45 deg	3	10730	3867	728	304	100	11405,62	198
199	Perm load 0,9	45 deg	4 Construc	9119	2271	721	259	59	9397,373	199
200										200
201	Perm load 0,9	90 deg	1a	-10126	8047	707	-283	231	12933,69	201
202	Perm load 0,9	90 deg	1b	-8918	2957	707	-250	78	9395,34	202
203	Perm load 0,9	90 deg	3	-11048	5972	729	-309	154	12558,81	203
204	Perm load 0,9	90 deg	4	-8862	2978	721	-249	78	9348,86	204
205										205
206										206
207	Perm load 0,9	-45 deg	1a	9804	5086	707	297	149	11044,69	207
208	Perm load 0,9	-45 deg	1b	8998	2213	707	256	58	9266,116	208
209	Perm load 0,9	-45 deg	3	9904	3792	728	285	98	10605,43	209
210	Perm load 0,9	-45 deg	4	9020	2245	721	257	58	9295,336	210
				35215	10385	1014	880	292	35558	

W4H400ZA+5 (Aftak mast 34 en 106) (rev 8.0, date: 23-11-2012)

Loadcases for tower strength (Special limit state)

Loadcase according to 50341-3-15

			AHEAD			BACK		Totaal			Belastingen op mastvoet, per lijn					Belasting op mastvoet, belastinggeval					
		[N]	[N]	[N]	[N]	[N]	[N]	Vert	Dwars	Langs	M_{langs}	M_{dwars}	N	V_{langs}	V_{dwars}		M_{langs}	M_{dwars}	N	V_{langs}	V_{dwars}
	Attachment point							[kN]	[kN]	[kN]											
1a	Comp. gl	4617	1761	40155	4617	1761	-40155	9,234	3,522	0	0	105,2187	9,234	0	3,522	1a	4488,939	2048,599	128,739	110,838	48,973
Wind, 10 (	GW / opgv	2226	852	19378	2226	852	-19378	4,452	1,704	0	0	101,2442	4,452	0	1,704	Wind angle: 0 dgr					
Permaner	380C1F1	17045	6483	147784	17045	6483	-147784	34,09	12,966	0	0	635,334	34,09	0	12,966						
Wind angl	380C1F2	17045	6481	147784	17045	6481	-147784	34,09	12,962	0	0	524,961	34,09	0	12,962						
	380C1F3	17045	6479	147784	17045	6479	-147784	34,09	12,958	0	0	414,656	34,09	0	12,958						
	150C1F1	4261	1621	36946	0	0	0	4,261	1,621	36,946	1810,354	102,8645	4,261	36,946	1,621						
	150C1F2	4261	1620	36946	0	0	0	4,261	1,62	36,946	1496,313	89,0455	4,261	36,946	1,62						
	150C1F3	4261	1620	36946	0	0	0	4,261	1,62	36,946	1182,272	75,2755	4,261	36,946	1,62						
1b	Comp. gl	4615	1970	45077	4615	1970	-45077	9,23	3,94	0	0	115,4515	9,23	0	3,94	1b	5156,825	2328,207	128,673	127,329	55,953
Wind, -20	GW / opgv	2225	961	21970	2225	961	-21970	4,45	1,922	0	0	113,7625	4,45	0	1,922	Wind angle: 0 dgr					
Permaner	380C1F1	17036	7422	169770	17036	7422	-169770	34,072	14,844	0	0	727,356	34,072	0	14,844						
Wind angl	380C1F2	17036	7421	169770	17036	7421	-169770	34,072	14,842	0	0	601,101	34,072	0	14,842						
	380C1F3	17036	7420	169770	17036	7420	-169770	34,072	14,84	0	0	474,88	34,072	0	14,84						
	150C1F1	4259	1855	42443	0	0	0	4,259	1,855	42,443	2079,707	114,3195	4,259	42,443	1,855						
	150C1F2	4259	1855	42443	0	0	0	4,259	1,855	42,443	1718,942	98,552	4,259	42,443	1,855						
	150C1F3	4259	1855	42443	0	0	0	4,259	1,855	42,443	1358,176	82,7845	4,259	42,443	1,855						
3	Comp. gl	7762	2793	63692	7762	2793	-63692	15,524	5,586	0	0	168,6812	15,524	0	5,586	3	5383,301	2536,173	156,781	132,921	60,732
Wind+ice,	GW / opgv	3796	1374	31270	3796	1374	-31270	7,592	2,748	0	0	163,5876	7,592	0	2,748	Wind angle: 0 dgr					
Permaner	380C1F1	19802	7765	177228	19802	7765	-177228	39,604	15,53	0	0	760,97	39,604	0	15,53						
Wind angl	380C1F2	19802	7763	177228	19802	7763	-177228	39,604	15,526	0	0	628,803	39,604	0	15,526						
	380C1F3	19802	7760	177228	19802	7760	-177228	39,604	15,52	0	0	496,64	39,604	0	15,52						
	150C1F1	4951	1941	44307	0	0	0	4,951	1,941	44,307	2171,043	122,3395	4,951	44,307	1,941						
	150C1F2	4951	1941	44307	0	0	0	4,951	1,941	44,307	1794,434	105,841	4,951	44,307	1,941						
	150C1F3	4951	1940	44307	0	0	0	4,951	1,94	44,307	1417,824	89,3105	4,951	44,307	1,94						
4	Comp. gl	5821	2154	49285	5821	2154	-49285	11,642	4,308	0	0	129,4121	11,642	0	4,308	4	5091,701	2337,666	148,593	125,721	55,868
Constructi	GW / opgv	2828	1049	23990	2828	1049	-23990	5,656	2,098	0	0	124,7867	5,656	0	2,098	Wind angle: 0 dgr					
Permaner	380C1F1	19451	7328	167627	19451	7328	-167627	38,902	14,656	0	0	718,144	38,902	0	14,656						
Wind angl	380C1F2	19451	7328	167627	19451	7328	-167627	38,902	14,656	0	0	593,568	38,902	0	14,656						
	380C1F3	19451	7327	167627	19451	7327	-167627	38,902	14,654	0	0	468,928	38,902	0	14,654						
	150C1F1	4863	1832	41907	0	0	0	4,863	1,832	41,907	2053,443	116,5145	4,863	41,907	1,832						
	150C1F2	4863	1832	41907	0	0	0	4,863	1,832	41,907	1697,234	100,9425	4,863	41,907	1,832						
	150C1F3	4863	1832	41907	0	0	0	4,863	1,832	41,907	1341,024	85,3705	4,863	41,907	1,832						
6	Comp. gl	5195	1931	44221	5195	1931	-44221	10,39	3,862	0	0	115,9185	10,39	0	3,862	6	4934,115	2244,652	144,844	121,83	53,597
Permaner	GW / opgv	2505	932	21353	2505	932	-21353	5,01	1,864	0	0	110,8571	5,01	0	1,864	0					
Permaner	380C1F1	19177	7092	162441	19177	7092	-162441	38,354	14,184	0	0	695,016	38,354	0	14,184						
	380C1F2	19177	7092	162441	19177	7092	-162441	38,354	14,184	0	0	574,452	38,354	0	14,184						
	380C1F3	19177	7092	162441	19177	7092	-162441	38,354	14,184	0	0	453,888	38,354	0	14,184						
	150C1F1	4794	1773	40610	0	0	0	4,794	1,773	40,61	1989,89	113,244	4,794	40,61	1,773						
	150C1F2	4794	1773	40610	0	0	0	4,794	1,773	40,61	1644,705	98,1735	4,794	40,61	1,773						
	150C1F3	4794	1773	40610	0	0	0	4,794	1,773	40,61	1299,52	83,103	4,794	40,61	1,773						
1a	Comp. gl	4618	3710	42599	4618	4106	-43575	9,236	7,816	-0,976	-23,912	210,4258	9,236	-0,976	7,816	1a	4246,801	4521,561	128,749	104,942	109,734
Wind, 10 (	GW / opgv	2226	2283	21897	2226	2577	-22837	4,452	4,86	-0,94	-53,9842	282,4933	4,452	-0,94	4,86	Wind angle: 45 dgr					
Permaner	380C1F1	17046	14360	158203	17047	15962	-162308	34,093	30,322	-4,105	-201,145	1485,778	34,093	-4,105	30,322						
Wind angl	380C1F2	17046	13772	156827	17046	15252	-160427	34,092	29,024	-3,6	-145,8	1175,472	34,092	-3,6	29,024						
	380C1F3	17046	13045	155232	17046	14373	-158235	34,092	27,418	-3,003	-96,096	877,376	34,092	-3,003	27,418						
	150C1F1	4262	3590	39551	0	0	0	4,262	3,59	39,551	1937,999	199,351	4,262	39,551	3,59						
	150C1F2	4261	3443	39207	0	0	0	4,261	3,443	39,207	1587,884	162,877	4,261	39,207	3,443						
	150C1F3	4261	3261	38808	0	0	0	4,261	3,261	38,808	1241,856	127,7875	4,261	38,808	3,261						
1b	Comp. gl	4615	2548	45313	4615	2661	-45417	9,23	5,209	-0,104	-2,548	146,542	9,23	-0,104	5,209	1b	5127,5	3057,487	128,673	126,622	73,884
Wind, -20	GW / opgv	2225	1379	22232	2225	1462	-22344	4,45	2,841	-0,112	-6,43216	166,5406	4,45	-0,112	2,841	Wind angle: 45 dgr					
Permaner	380C1F1	17036	9748	170789	17036	10205	-171233	34,072	19,953	-0,444	-21,756	977,697	34,072	-0,444	19,953						
Wind angl	380C1F2	17036	9580	170644	17036	10003	-171027	34,072	19,583	-0,383	-15,5115	793,1115	34,072	-0,383	19,583						
	380C1F3	17036	9371	170479	17036	9752	-170792	34,072	19,123	-0,313	-10,016	611,936	34,072	-0,313	19,123						
	150C1F1	4259	2437	42697	0	0	0	4,259	2,437	42,697	2092,153	142,8375	4,259	42,697	2,437						
	150C1F2	4259	2395	42661	0	0	0	4,259	2,395	42,661	1727,771	120,422	4,259	42,661	2,395						
	150C1F3	4259	2343	42620	0	0	0	4,259	2,343	42,62	1363,84	98,4005	4,259	42,62	2,343						
3	Comp. gl	7762	5837	66862	7762	6450	-68138	15,524	12,287	-1,276	-31,262	332,8557	15,524	-1,276	12,287	3	5168,116	4831,854	156,788	127,676	117,443
Wind+ice,	GW / opgv	3796	3604	34528	3796	4058	-35760	7,592	7,662	-1,232	-70,7538	445,7986	7,592	-1,232	7,662	Wind angle: 45 dgr					
Permaner	380C1F1	19803	14428	183802	19804	15768	-186490	39,607	30,196	-2,688	-131,712	1479,604	39,607	-2,688	30,196						
Wind angl	380C1F2	19803	13936	182911	19803	15174	-185252	39,606	29,11	-2,341	-94,8105	1178,955	39,606	-2,341	29,11						
	380C1F3	19803	13326	181886	19803	14439	-183822	39,606	27,765	-1,936	-61,952	888,48	39,606	-1,936	27,765						
	150C1F1	4951	3607	45950	0	0	0	4,951	3,607	45,95	2251,55	203,9735	4,951	45,95	3,607						
	150C1F2	4951	3484	45728	0	0	0	4,951	3,484	45,728	1851,984	168,3325	4,951	45,728	3,484						
	150C1F3	4951	3332	45471	0	0	0	4,951	3,332	45,471	1455,072	133,8545	4,951	45,471	3,332						
4	Comp. gl	5821	2728	49448	5821	2840	-49522	11,642	5,568	-0,074	-1,813	160,2821	11,642	-0,074	5,568	4	5068,444	3064,054	148,593	125,16	73,728
Constructi	GW / opgv	2828	1464	24172	2828	1545	-24251	5,656	3,009	-0,079	-4,53697	177,1054	5,656	-0,079	3,009	Wind angle: 45 dgr					
Permaner	380C1F1	19451	9647	168439	19451	10101	-168800	38,902	19,748	-0,361	-17,689	967,652	38,902	-0,361	19,748						
Wind angl	380C1F2	19451	9480	168322	19451	9900	-168633	38,902	19,38	-0,311	-12,5955	784,89	38,902	-0,311	19,38						
	380C1F3	19451	9272	168189	19451	9651	-168442	38,902	18,923	-0,253	-8,096	605,536	38,902	-0,253	18,923						
	150C1F1	4863	2412	42110	0	0	0	4,863	2,412	42,11	2063,39	144,9345	4,863	42,11	2,412						
	150C1F2	4863	2370	42081	0	0	0	4,863	2,37	42,081	1704,281	122,7315	4,863	42,081	2,37						
	150C1F3	4863	2318	42047	0	0	0	4,863	2,318	42,047	1345,504	100,9225	4,863	42,047	2,318						
1a	Comp. gl	4618	6249	50434	4618	6249	-50434	9,236	12,498	0	0	325,1348	9,236	0	12,498	1a	5651,902	7262,061	128,775	138,981	177,031
Wind, 10 (	GW / opgv	2227	4162	28849	2227	4162	-28849	4,454	8,324	0	0	481,4324	4,454	0	8,324	Wind angle: 90 dgr					
Permaner	380C1F1	17050	24622	190595	17050	24622	-190595	34,1	49,244	0	0	2412,956	34,1	0	49,244						
Wind angl	380C1F2	17050	23251	185638	17050	23251	-185638	34,1	46,502	0	0	1883,331	34,1	0	46,502						
	380C1F3	17049	21553	179693	17049	21553	-179693	34,098	43,106	0	0	1379,392	34,098	0	43,106						
	150C1F1	4263	6156	47649	0	0	0	4,263	6,156	47,649	2334,801	325,0905	4,263	47,649	6,156						
	150C1F2	4262	5813	46409	0	0	0	4,262	5,813	46,409	1879,565	258,8675	4,262	46,409	5,813						
	150C1F3	4262	5388	44923	0	0	0	4,262	5,388	44,923	1437,536	195,857	4,262	44,923	5,388						
1b	Comp. gl	4615	3264	46248	4615	3264	-46248	9,23	6,528	0	0	178,8575	9,23	0	6,528	1b	5290,395	3830,658	128,673	130,55	92,877
Wind, -20	GW / opgv	2225	1906	23220	2225	1906	-23220	4,45	3,812	0	0	222,3052	4,45	0	3,812	Wind angle: 90 dgr					
Permaner	380C1F1	17036	12643	174784	17036	12643	-174784	34,072	25,286	0	0	1239,014	34,072	0	25,286						
Wind angl	380C1F2	17036	12258	174101	17036	12258	-174101	34,072	24,516	0	0	992,898	34,072	0	24,516						
	380C1F3	17036	11782	173316	17036	11782	-173316	34,072	23,564	0	0	754,048	34,072	0	23,564						

	150C1F1	4259	3161	43696	0	0	0	4,259	3,161	43,696	2141,104	178,3135	4,259	43,696	3,161						
	150C1F2	4259	3065	43525	0	0	0	4,259	3,065	43,525	1762,763	147,557	4,259	43,525	3,065						
	150C1F3	4259	2945	43329	0	0	0	4,259	2,945	43,329	1386,528	117,6645	4,259	43,329	2,945						
3	Comp. gl	7764	9752	77198	7764	9752	-77198	15,528	19,504	0	0	509,6804	15,528	0	19,504	3	6162,252	7342,573	156,812	151,747	179,414
Wind+ice,	GW / opg	3798	6497	43749	3798	6497	-43749	7,596	12,994	0	0	752,0184	7,596	0	12,994	Wind angle:	90 dgr				
Permaner	380C1F1	19806	23003	206105	19806	23003	-206105	39,612	46,006	0	0	2254,294	39,612	0	46,006						
Wind angl	380C1F2	19806	21856	202544	19806	21856	-202544	39,612	43,712	0	0	1770,336	39,612	0	43,712						
	380C1F3	19805	20437	198338	19805	20437	-198338	39,61	40,874	0	0	1307,968	39,61	0	40,874						
	150C1F1	4952	5751	51526	0	0	0	4,952	5,751	51,526	2524,774	309,035	4,952	51,526	5,751						
	150C1F2	4951	5464	50636	0	0	0	4,951	5,464	50,636	2050,758	248,5225	4,951	50,636	5,464						
	150C1F3	4951	5109	49585	0	0	0	4,951	5,109	49,585	1586,72	190,7185	4,951	49,585	5,109						
4	Comp. gl	5821	3433	50119	5821	3433	-50119	11,642	6,866	0	0	192,0831	11,642	0	6,866	4	5200,086	3828,311	148,593	128,334	92,506
Constructi	GW / opg	2828	1979	24882	2828	1979	-24882	5,656	3,958	0	0	231,6065	5,656	0	3,958	Wind angle:	90 dgr				
Permaner	380C1F1	19451	12511	171700	19451	12511	-171700	38,902	25,022	0	0	1226,078	38,902	0	25,022						
Wind angl	380C1F2	19451	12131	171140	19451	12131	-171140	38,902	24,262	0	0	982,611	38,902	0	24,262						
	380C1F3	19451	11661	170497	19451	11661	-170497	38,902	23,322	0	0	746,304	38,902	0	23,322						
	150C1F1	4863	3128	42925	0	0	0	4,863	3,128	42,925	2103,325	180,0185	4,863	42,925	3,128						
	150C1F2	4863	3033	42785	0	0	0	4,863	3,033	42,785	1732,793	149,583	4,863	42,785	3,033						
	150C1F3	4863	2915	42624	0	0	0	4,863	2,915	42,624	1363,968	120,0265	4,863	42,624	2,915						
1a	Comp. gl	4618	4106	43575	4618	3710	-42599	9,236	7,816	0,976	23,912	210,4258	9,236	0,976	7,816	1a	5399,432	4566,83	128,751	132,867	110,837
Wind, 10	GW / opg	2226	2577	22837	2226	2283	-21897	4,452	4,86	0,94	53,9842	282,4933	4,452	0,94	4,86	Wind angle:	-45 dgr				
Permaner	380C1F1	17047	15962	162308	17046	14360	-158203	34,093	30,322	4,105	201,145	1485,778	34,093	4,105	30,322						
Wind angl	380C1F2	17046	15252	160427	17046	13772	-156827	34,092	29,024	3,6	145,8	1175,472	34,092	3,6	29,024						
	380C1F3	17046	14373	158235	17046	13045	-155232	34,092	27,418	3,003	96,096	877,376	34,092	3,003	27,418						
	150C1F1	4262	3991	40577	0	0	0	4,262	3,991	40,577	1988,273	219	4,262	40,577	3,991						
	150C1F2	4262	3813	40107	0	0	0	4,262	3,813	40,107	1624,334	177,8675	4,262	40,107	3,813						
	150C1F3	4262	3593	39559	0	0	0	4,262	3,593	39,559	1265,888	138,417	4,262	39,559	3,593						
1b	Comp. gl	4615	2661	45417	4615	2548	-45313	9,23	5,209	0,104	2,548	146,542	9,23	0,104	5,209	1b	5251,85	3070,406	128,673	129,619	74,199
Wind, -20	GW / opg	2225	1462	22344	2225	1379	-22232	4,45	2,841	0,112	6,43216	166,5406	4,45	0,112	2,841	Wind angle:	-45 dgr				
Permaner	380C1F1	17036	10205	171233	17036	9748	-170789	34,072	19,953	0,444	21,756	977,697	34,072	0,444	19,953						
Wind angl	380C1F2	17036	10003	171027	17036	9580	-170644	34,072	19,583	0,383	15,5115	793,1115	34,072	0,383	19,583						
	380C1F3	17036	9752	170792	17036	9371	-170479	34,072	19,123	0,313	10,016	611,936	34,072	0,313	19,123						
	150C1F1	4259	2551	42808	0	0	0	4,259	2,551	42,808	2097,592	148,4235	4,259	42,808	2,551						
	150C1F2	4259	2501	42757	0	0	0	4,259	2,501	42,757	1731,659	124,715	4,259	42,757	2,501						
	150C1F3	4259	2438	42698	0	0	0	4,259	2,438	42,698	1366,336	101,4405	4,259	42,698	2,438						
3	Comp. gl	7762	6450	68138	7762	5837	-66862	15,524	12,287	1,276	31,262	332,8557	15,524	1,276	12,287	3	6021,237	4869,72	156,788	148,364	118,366
Wind+ice,	GW / opg	3796	4058	35760	3796	3604	-34528	7,592	7,662	1,232	70,75376	445,7986	7,592	1,232	7,662	Wind angle:	-45 dgr				
Permaner	380C1F1	19804	15768	186490	19803	14428	-183802	39,607	30,196	2,688	131,712	1479,604	39,607	2,688	30,196						
Wind angl	380C1F2	19803	15174	185252	19803	13936	-182911	39,606	29,11	2,341	94,8105	1178,955	39,606	2,341	29,11						
0	380C1F3	19803	14439	183822	19803	13326	-181886	39,606	27,765	1,936	61,952	888,48	39,606	1,936	27,765						
	150C1F1	4951	3942	46622	0	0	0	4,951	3,942	46,622	2284,478	220,3885	4,951	46,622	3,942						
	150C1F2	4951	3794	46313	0	0	0	4,951	3,794	46,313	1875,677	180,8875	4,951	46,313	3,794						
	150C1F3	4951	3610	45956	0	0	0	4,951	3,61	45,956	1470,592	142,7505	4,951	45,956	3,61						
4	Comp. gl	5821	2840	49522	5821	2728	-49448	11,642	5,568	0,074	1,813	160,2821	11,642	0,074	5,568	4	5167,481	3076,884	148,593	127,547	74,041
Constructi	GW / opg	2828	1545	24251	2828	1464	-24172	5,656	3,009	0,079	4,53697	177,1054	5,656	0,079	3,009	Wind angle:	-45 dgr				
Permaner	380C1F1	19451	10101	168800	19451	9647	-168439	38,902	19,748	0,361	17,689	967,652	38,902	0,361	19,748						
Wind angl	380C1F2	19451	9900	168633	19451	9480	-168322	38,902	19,38	0,311	12,5955	784,89	38,902	0,311	19,38						
	380C1F3	19451	9651	168442	19451	9272	-168189	38,902	18,923	0,253	8,096	605,536	38,902	0,253	18,923						
	150C1F1	4863	2525	42200	0	0	0	4,863	2,525	42,2	2067,8	150,4715	4,863	42,2	2,525						
	150C1F2	4863	2475	42158	0	0	0	4,863	2,475	42,158	1707,399	126,984	4,863	42,158	2,475						
	150C1F3	4863	2413	42111	0	0	0	4,863	2,413	42,111	1347,552	103,9625	4,863	42,111	2,413						
1a	Comp. gl	3462	1387	31599	3462	1387	-31599	6,924	2,774	0	0	82,1572	6,924	0	2,774	1a	3549,501	1617,057	96,533	87,642	38,746
Wind, 10	GW / opg	1669	670	15226	1669	670	-15226	3,338	1,34	0	0	79,49308	3,338	0	1,34	Wind angle:	0 dgr				
Permaner	380C1F1	12781	5133	116856	12781	5133	-116856	25,562	10,266	0	0	503,034	25,562	0	10,266						
Wind angl	380C1F2	12781	5131	116856	12781	5131	-116856	25,562	10,262	0	0	415,611	25,562	0	10,262						
	380C1F3	12781	5128	116856	12781	5128	-116856	25,562	10,256	0	0	328,192	25,562	0	10,256						
	150C1F1	3195	1283	29214	0	0	0	3,195	1,283	29,214	1431,486	80,4395	3,195	29,214	1,283						
	150C1F2	3195	1283	29214	0	0	0	3,195	1,283	29,214	1183,167	69,534	3,195	29,214	1,283						
	150C1F3	3195	1282	29214	0	0	0	3,195	1,282	29,214	934,848	58,5965	3,195	29,214	1,282						
1b	Comp. gl	3461	1577	36072	3461	1577	-36072	6,922	3,154	0	0	91,4631	6,922	0	3,154	1b	4168,665	1875,537	96,481	102,93	45,198
Wind, -20	GW / opg	1668	769	17575	1668	769	-17575	3,336	1,538	0	0	90,8627	3,336	0	1,538	Wind angle:	0 dgr				
Permaner	380C1F1	12774	6002	137240	12774	6002	-137240	25,548	12,004	0	0	588,196	25,548	0	12,004						
Wind angl	380C1F2	12774	6001	137240	12774	6001	-137240	25,548	12,002	0	0	486,081	25,548	0	12,002						
	380C1F3	12774	6000	137240	12774	6000	-137240	25,548	12	0	0	384	25,548	0	12						
	150C1F1	3193	1500	34310	0	0	0	3,193	1,5	34,31	1681,19	91,0615	3,193	34,31	1,5						
	150C1F2	3193	1500	34310	0	0	0	3,193	1,5	34,31	1389,555	78,3115	3,193	34,31	1,5						
	150C1F3	3193	1500	34310	0	0	0	3,193	1,5	34,31	1097,92	65,5615	3,193	34,31	1,5						
3	Comp. gl	6606	2468	56251	6606	2468	-56251	13,212	4,936	0	0	148,0166	13,212	0	4,936	3	4464,761	2117,889	124,571	110,241	50,852
Wind+ice,	GW / opg	3238	1216	27659	3238	1216	-27659	6,476	2,432	0	0	144,5915	6,476	0	2,432	Wind angle:	0 dgr				
Permaner	380C1F1	15538	6444	146988	15538	6444	-146988	31,076	12,888	0	0	631,512	31,076	0	12,888						
Wind angl	380C1F2	15538	6442	146988	15538	6442	-146988	31,076	12,884	0	0	521,802	31,076	0	12,884						
	380C1F3	15538	6440	146988	15538	6440	-146988	31,076	12,88	0	0	412,16	31,076	0	12,88						
	150C1F1	3885	1611	36747	0	0	0	3,885	1,611	36,747	1800,603	100,3065	3,885	36,747	1,611						
	150C1F2	3885	1611	36747	0	0	0	3,885	1,611	36,747	1488,254	86,613	3,885	36,747	1,611						
	150C1F3	3885	1610	36747	0	0	0	3,885	1,61	36,747	1175,904	72,8875	3,885	36,747	1,61						
4	Comp. gl	4665	1803	41233	4665	1803	-41233	9,33	3,606	0	0	107,4735	9,33	0	3,606	4	4181,909	1920,289	116,379	103,257	45,999
Constructi	GW / opg	2271	879	20083	2271	879	-20083	4,542	1,758	0	0	104,4139	4,542	0	1,758	Wind angle:	0 dgr				
Permaner	380C1F1	15186	6021	137677	15186	6021	-137677	30,372	12,042	0	0	590,058	30,372	0	12,042						
Wind angl	380C1F2	15186	6020	137678	15186	6020	-137678	30,372	12,04	0	0	487,62	30,372	0	12,04						
	380C1F3	15186	6019	137678	15186	6019	-137678	30,372	12,038	0	0	385,216	30,372	0	12,038						
	150C1F1	3797	1505	34419	0	0	0	3,797	1,505	34,419	1686,531	94,6285	3,797	34,419	1,505						
	150C1F2	3797	1505	34419	0	0	0	3,797	1,505	34,419	1393,97	81,836	3,797	34,419	1,505						
	150C1F3	3797	1505	34419	0	0	0	3,797	1,505	34,419	1101,408	69,0435	3,797	34,419	1,505						
6	Comp. gl	3462	1380	31600	3462	1380	-31600	6,924	2,76	0	0	81,8142	6,924	0	2,76	6	3549,501	1608,27	96,533	87,642	38,53
Permaner	GW / opg	1669	665	15226	1669	665	-15226	3,338	1,33	0	0	78,91878	3,338	0	1,33	0					
Permaner	380C1F1	12781	5102	116857	12781	5102	-116857	25,562	10,204	0	0	499,996	25,562	0	10,204						
	380C1F2	12781	5102	116857	12781	5102	-116857	25,562	10,204	0	0	413,262	25,562	0	10,204						
	380C1F3	12781	5102	116857	12781	5102	-116857	25,562	10,204	0	0	326,528	25,562	0	10,204						
	150C1F1	3195	1276	29214	0	0	0	3,195	1,276	29,214	1431,486	80,0965	3,195	29,214	1,276						
	150C1F2	3195	1276	29214	0	0	0	3,195	1,276	29,214	1183,167	69,2505	3,195	29,214	1,276						
	150C1F3	3195	1276	29214	0	0	0	3,195	1,276	29,214	934,848	58,4045	3,195	29,214	1,276						
1a	Comp. gl	3463	3379	35022	3463	3790	-36327	6,926	7,169	-1,305	-31,9725	189,8388	6,926	-1,305	7,169	1a	3247,521	4147,96	96,544	80,244	100,916
Wind, 10	GW / opg	1669	2140	18636	1670	2446	-19823	3,339	4,586	-1,187	-68,1694	265,9116	3,339	-1,187	4,586	Wind angle:	45 dgr				
Permaner	380C1F1	12782	13189	131415	12783	14850	-136867	25,565	28,039	-5,452	-267,148	1373,911	25,565	-5,452	28,039						
Wind angl	380C1F2	12782	12580	129558	12782	14113	-134385	25,564	26,693	-4,827	-195,494	1081,067	25,564	-4,827	26,693						
	380C1F3	12782	11828	127384	12782	13202	-131458	25,564	25,03	-4,074	-130,368	800,96	25,564	-4,074	25,03						
	150C1F1	3196	3297	32854	0	0	0	3,196	3,297	32,854	1609,846	179,131	3,196	32,854	3,297						
	150C1F2	3195	3145	32389	0	0	0	3,195	3,145	32,389	1311,755	144,945	3,195	32,389	3,145						
	150C1F3	3195	2957	31846	0	0	0	3,195	2,957	31,846	1019,072	112,1965	3,195	31,846	2,957						
1b	Comp. gl	3461	2159	36425	3461	2275	-36576	6,922	4,434	-0,151	-3,6995	122,8231	6,922	-0,151	4,434	1b	4126,764	2611,883	96,481	101,919	63,299
Wind, -20	GW / opg	1668	1192	17961	1668	1277	-18122	3,336	2,469	-0,161	-9,24623	144,33	3,336	-0,161	2,469	Wind angle:	45 dgr				
Permaner	380C1F1	12774	8350	138766	12774	8816	-139418	25,548	17,166	-0,652	-31,948	841,134	25,548	-0,652	17,166						
Wind angl	380C1F2	12774	8178	138553	12774	8609	-139116	25,548	16,787	-0,563	-22,8015	679,8735	25,548	-0,563	16,787						
	380C1F3	12774	7966	138310	12774	8354	-138771	25,548	16,32	-0,461	-14,752	522,24	25,548	-0,461	16,32						
	150C1F1	3193	2087	34692	0	0	0	3,193	2,087	34,692	1699,908	119,8245	3,193	34,692	2,087						
	150C1F2	3193	2045	34638	0	0	0	3,193	2,045	34,638	1402,839	100,384	3,193	34,638	2,045						
	150C1F3	3193	1991	34577	0	0	0	3,193	1,991	34,577	1106,464	81,2735	3,193	34,577	1,991						
3	Comp. gl	6606	5542	60127	6607	6166	-61652	13,213	11,708	-1,525	-37,3625	313,9327	13,213	-1,525	11,708	3	4202,288	4447,904	124,582	103,821	108,396
Wind+ice,	GW / opg	3239	3474	31567	3239	3937	-32993	6,478	7,411	-1,426	-81,8952	430,537	6,478	-1,426	7,411	Wind angle:	45 dgr				
Permaner	380C1F1	15539	13210	155921	15540	14587	-159465	31,079	27,797	-3,544	-173,656	1362,053	31,079	-3,544	27,797						
Wind angl	380C1F2	15539	12705	154736	15540	13976	-157840	31,079	26,681	-3,104	-125,712	1080,581	31,079	-3,104	26,681						
	380C1F3	15539	12080	153364	15539	13221	-155949	31,078	25,301	-2,585	-82,72	809,632	31,078	-2,585	25,301						
	150C1F1	3885	3302	38980	0	0	0	3,885	3,302	38,98	1910,02	183,1655	3,885	38,98	3,302						
	150C1F2	3885	3176	38684	0	0	0	3,885	3,176	38,684	1566,702	149,9955	3,885	38,684	3,176						
	150C1F3	3885	3020	38341	0	0	0	3,885	3,02	38,341	1226,912	118,0075	3,885	38,341	3,02						
4	Comp. gl	4665	2379	41456	4665	2492	-41555	9,33	4,871	-0,099	-2,4255	138,466	9,33	-0,099	4,871	4	4150,87	2651,083	116,379	102,508	63,966
Constructi	GW / opg	2271	1296	20328	2271	1378	-20433	4,542	2,674	-0,105	-6,03015	157,0197	4,542	-0,105	2,674	Wind angle:	45 dgr				
Permaner	380C1F1	15186	8354	138827	15186	8813	-139326	30,372	17,167	-0,499	-24,451	841,183	30,372	-0,499	17,167						
Wind angl	380C1F2	15186	8184	138665	15186	8610	-139095	30,372	16,794	-0,43	-17,415	680,157	30,372	-0,43	16,794						
	380C1F3	15186	7974	138479	15186	8358	-138831	30,372	16,332	-0,352	-11,264	522,624	30,372	-0,352	16,332						
	150C1F1	3797	2088	34707	0	0	0	3,797	2,088	34,707	1700,643	123,1955	3,797	34,707	2,088						
	150C1F2	3797	2046	34666	0	0	0	3,797	2,046	34,666	1403,973	103,7465	3,797	34,666	2,046						
	150C1F3	3797	1994	34620	0	0	0	3,797	1,994	34,62	1107,84	84,6915	3,797	34,62	1,994						
1a	Comp. gl	3463	6009	44934	3463	6009	-44934	6,926	12,018	0	0	308,6393	6,926	0	12,018	1a	5057,857	6983,202	96,566	124,198	170,555
Wind, 10	GW / opg	1670	4076	26872	1670	4076	-26872	3,34	8,152	0	0	470,7078	3,34	0	8,152	Wind angle:	90 dgr				
Permaner	380C1F1	12786	23805	171934	12786	23805	-171934	25,572	47,61	0	0	2332,89	25,572	0	47,61						
Wind angl	380C1F2	12785	22393	166026	12785	22393	-166026	25,57	44,786	0	0	1813,833	25,57	0	44,786						
	380C1F3	12785	20640	158830	12785	20640	-158830	25,57	41,28	0	0	1320,96	25,57	0	41,28						
	150C1F1	3196	5951	42983	0	0	0	3,196	5,951	42,983	2106,167	309,177	3,196	42,983	5,951						
	150C1F2	3196	5598	41507	0	0	0	3,196	5,598	41,507	1681,034	244,297	3,196	41,507	5,598						
	150C1F3	3196	5160	39708	0	0	0	3,196	5,16	39,708	1270,656	182,698	3,196	39,708	5,16						
1b	Comp. gl	3461	2893	37768	3461	2893	-37768	6,922	5,786	0	0	155,9471	6,922	0	5,786	1b	4363,047	3405,199	96,488	107,62	82,779
Wind, -20	GW / opg	1669	1737	19345	1669	1737	-19345	3,338	3,474	0	0	202,0487	3,338	0	3,474	Wind angle:	90 dgr				
Permaner	380C1F1	12775	11320	144512	12775	11320	-144512	25,55	22,64	0	0	1109,36	25,55	0	22,64						
Wind angl	380C1F2	12774	10923	143544	12774	10923	-143544	25,548	21,846	0	0	884,763	25,548	0	21,846						
	380C1F3	12774	10432	142426	12774	10432	-142426	25,548	20,864	0	0	667,648	25,548	0	20,864						
	150C1F1	3194	2830	36128	0	0	0	3,194	2,83	36,128	1770,272	156,237	3,194	36,128	2,83						
	150C1F2	3194	2731	35886	0	0	0	3,194	2,731	35,886	1453,383	128,1725	3,194	35,886	2,731						
	150C1F3	3194	2608	35606	0	0	0	3,194	2,608	35,606	1139,392	101,023	3,194	35,606	2,608						
3	Comp. gl	6608	9529	72110	6608	9529	-72110	13,216	19,058	0	0	494,0138	13,216	0	19,058	3	5472,83	7027,509	124,607	134,63	172,063
Wind+ice,	GW / opg	3241	6414	41862	3241	6414	-41862	6,482	12,828	0	0	741,6384	6,482	0	12,828	Wind angle:	90 dgr				
Permaner	380C1F1	15543	22042	184145	15543	22042	-184145	31,086	44,084	0	0	2160,116	31,086	0	44,084						
Wind angl	380C1F2	15542	20861	179791	15542	20861	-179791	31,084	41,722	0	0	1689,741	31,084	0	41,722						
	380C1F3	15541	19398	174585	15541	19398	-174585	31,082	38,796	0	0	1241,472	31,082	0	38,796						
	150C1F1	3886	5511	46036	0	0	0	3,886	5,511	46,036	2255,764	291,412	3,886	46,036	5,511						
	150C1F2	3886	5215	44948	0	0	0	3,886	5,215	44,948	1820,394	232,5805	3,886	44,948	5,215						
	150C1F3	3885	4849	43646	0	0	0	3,885	4,849	43,646	1396,672	176,5355	3,885	43,646	4,849						
4	Comp. gl	4665	3094	42346	4665	3094	-42346	9,33	6,188	0	0	170,7325	9,33	0	6,188	4	4331,452	3428,775	116,385	106,864	83,069
Constructi	GW / opg	2271	1821	21255	2271	1821	-21255	4,542	3,642	0	0	212,612	4,542	0	3,642	Wind angle:	90 dgr				
Permaner	380C1F1	15187	11269	143280	15187	11269	-143280	30,374	22,538	0	0	1104,362	30,374	0	22,538						
Wind angl	380C1F2	15187	10881	142523	15187	10881	-142523	30,374	21,762	0	0	881,361	30,374	0	21,762						
	380C1F3	15187	10401	141650	15187	10401	-141650	30,374	20,802	0	0	665,664	30,374	0	20,802						
	150C1F1	3797	2817	35820	0	0	0	3,797	2,817	35,82	1755,18	158,9165	3,797	35,82	2,817						
	150C1F2	3797	2720	35631	0	0	0	3,797	2,72	35,631	1443,056	131,0435	3,797	35,631	2,72						
	150C1F3	3797	2600	35413	0	0	0	3,797	2,6	35,413	1133,216	104,0835	3,797	35,413	2,6						
1a	Comp. gl	3463	3790	36327	3463	3379	-35022	6,926	7,169	1,305	31,9725	189,8388	6,926	1,305	7,169	1a	4782,07	4194,826	96,546	117,522	102,058

Wind, 10	GW / opg	1670	2446	19823	1669	2140	-18636	3,339	4,586	1,187	68,16941	265,9116	3,339	1,187	4,586	Wind angle: -45 dgr									
Permanen	380C1F1	12783	14850	136867	12782	13189	-131415	25,565	28,039	5,452	267,148	1373,911	25,565	5,452	28,039										
Wind ang	380C1F2	12782	14113	134385	12782	12580	-129558	25,564	26,693	4,827	195,4935	1081,067	25,564	4,827	26,693										
	380C1F3	12782	13202	131458	12782	11828	-127384	25,564	25,03	4,074	130,368	800,96	25,564	4,074	25,03										
	150C1F1	3196	3712	34217	0	0	0	3,196	3,712	34,217	1676,633	199,466	3,196	34,217	3,712										
	150C1F2	3196	3528	33596	0	0	0	3,196	3,528	33,596	1360,638	160,462	3,196	33,596	3,528										
	150C1F3	3196	3301	32864	0	0	0	3,196	3,301	32,864	1051,648	123,21	3,196	32,864	3,301										
1b	Comp. gl	3461	2275	36576	3461	2159	-36425	6,922	4,434	0,151	3,6995	122,8231	6,922	0,151	4,434	1b	4309,019	2625,064	96,483	106,314	63,62				
Wind, -20	GW / opg	1668	1277	18122	1668	1192	-17961	3,336	2,469	0,161	9,24623	144,33	3,336	0,161	2,469	Wind angle: -45 dgr									
Permanen	380C1F1	12774	8816	139418	12774	8350	-138766	25,548	17,166	0,652	31,948	841,134	25,548	0,652	17,166										
Wind ang	380C1F2	12774	8609	139116	12774	8178	-138553	25,548	16,787	0,563	22,8015	679,8735	25,548	0,563	16,787										
	380C1F3	12774	8354	138771	12774	7966	-138310	25,548	16,32	0,461	14,752	522,24	25,548	0,461	16,32										
	150C1F1	3194	2204	34854	0	0	0	3,194	2,204	34,854	1707,846	125,563	3,194	34,854	2,204										
	150C1F2	3194	2152	34779	0	0	0	3,194	2,152	34,779	1408,55	104,723	3,194	34,779	2,152										
	150C1F3	3193	2088	34693	0	0	0	3,193	2,088	34,693	1110,176	84,3775	3,193	34,693	2,088										
3	Comp. gl	6607	6166	61652	6606	5542	-60127	13,213	11,708	1,525	37,3625	313,9327	13,213	1,525	11,708	3	5300,494	4486,808	124,582	130,497	109,344				
Wind+ice,	GW / opg	3239	3937	32993	3239	3474	-31567	6,478	7,411	1,426	81,89518	430,537	6,478	1,426	7,411	Wind angle: -45 dgr									
Permanen	380C1F1	15540	14587	159465	15539	13210	-155921	31,079	27,797	3,544	173,656	1362,053	31,079	3,544	27,797										
Wind ang	380C1F2	15540	13976	157840	15539	12705	-154736	31,079	26,681	3,104	125,712	1080,581	31,079	3,104	26,681										
0	380C1F3	15539	13221	155949	15539	12080	-153364	31,078	25,301	2,585	82,72	809,632	31,078	2,585	25,301										
	150C1F1	3885	3647	39866	0	0	0	3,885	3,647	39,866	1953,434	200,0705	3,885	39,866	3,647										
	150C1F2	3885	3494	39460	0	0	0	3,885	3,494	39,46	1598,13	162,8745	3,885	39,46	3,494										
	150C1F3	3885	3305	38987	0	0	0	3,885	3,305	38,987	1247,584	127,1275	3,885	38,987	3,305										
4	Comp. gl	4665	2492	41555	4665	2379	-41456	9,33	4,871	0,099	2,4255	138,466	9,33	0,099	4,871	4	4287,308	2664,051	116,379	105,798	64,282				
Constructi	GW / opg	2271	1378	20433	2271	1296	-20328	4,542	2,674	0,105	6,03015	157,0197	4,542	0,105	2,674	Wind angle: -45 dgr									
Permanen	380C1F1	15186	8813	139326	15186	8354	-138827	30,372	17,167	0,499	24,451	841,183	30,372	0,499	17,167										
Wind ang	380C1F2	15186	8610	139095	15186	8184	-138665	30,372	16,794	0,43	17,415	680,157	30,372	0,43	16,794										
	380C1F3	15186	8358	138831	15186	7974	-138479	30,372	16,332	0,352	11,264	522,624	30,372	0,352	16,332										
	150C1F1	3797	2203	34831	0	0	0	3,797	2,203	34,831	1706,719	128,8305	3,797	34,831	2,203										
	150C1F2	3797	2152	34774	0	0	0	3,797	2,152	34,774	1408,347	108,0395	3,797	34,774	2,152										
	150C1F3	3797	2089	34708	0	0	0	3,797	2,089	34,708	1110,656	87,7315	3,797	34,708	2,089										
1a	Comp. gl	4617	1761	40155	0	0	0	4,617	1,761	40,155	983,7975	52,60935	4,617	40,155	1,761	1a	24541,37	1157,892	70,761	613,723	26,917				
Wind, 10	GW / opç	2226	852	19378	0	0	0	2,226	0,852	19,378	1112,879	50,6212	2,226	19,378	0,852	Wind angle: 0 dgr									
Permanen	380C1F1	17045	6483	147784	0	0	0	17,045	6,483	147,784	7241,416	317,667	17,045	147,784	6,483										
Wind ang	380C1F2	17045	6481	147784	0	0	0	17,045	6,481	147,784	5985,252	262,4805	17,045	147,784	6,481										
	380C1F3	17045	6479	147784	0	0	0	17,045	6,479	147,784	4729,088	207,328	17,045	147,784	6,479										
	150C1F1	4261	1621	36946	0	0	0	4,261	1,621	36,946	1810,354	102,8645	4,261	36,946	1,621										
	150C1F2	4261	1620	36946	0	0	0	4,261	1,62	36,946	1496,313	89,0455	4,261	36,946	1,62										
	150C1F3	4261	1620	36946	0	0	0	4,261	1,62	36,946	1182,272	75,2755	4,261	36,946	1,62										
1b	Comp. gl	4615	1970	45077	0	0	0	4,615	1,97	45,077	1104,387	57,72575	4,615	45,077	1,97	1b	28150	1311,931	70,725	703,686	30,759				
Wind, -2	GW / opç	2225	961	21970	0	0	0	2,225	0,961	21,97	1261,737	56,88123	2,225	21,97	0,961	Wind angle: 0 dgr									
Permanen	380C1F1	17036	7422	169770	0	0	0	17,036	7,422	169,77	8318,73	363,678	17,036	169,77	7,422										
Wind ang	380C1F2	17036	7421	169770	0	0	0	17,036	7,421	169,77	6875,685	300,5505	17,036	169,77	7,421										
	380C1F3	17036	7420	169770	0	0	0	17,036	7,42	169,77	5432,64	237,44	17,036	169,77	7,42										
	150C1F1	4259	1855	42443	0	0	0	4,259	1,855	42,443	2079,707	114,3195	4,259	42,443	1,855										
	150C1F2	4259	1855	42443	0	0	0	4,259	1,855	42,443	1718,942	98,552	4,259	42,443	1,855										
	150C1F3	4259	1855	42443	0	0	0	4,259	1,855	42,443	1358,176	82,7845	4,259	42,443	1,855										
3	Comp. gl	7762	2793	63692	0	0	0	7,762	2,793	63,692	1560,454	84,3406	7,762	63,692	2,793	3	30272,79	1426,832	85,817	759,567	33,277				
Wind+ice	GW / opç	3796	1374	31270	0	0	0	3,796	1,374	31,27	1795,836	81,79378	3,796	31,27	1,374	Wind angle: 0 dgr									
Permanen	380C1F1	19802	7765	177228	0	0	0	19,802	7,765	177,228	8684,172	380,485	19,802	177,228	7,765										
Wind ang	380C1F2	19802	7763	177228	0	0	0	19,802	7,763	177,228	7177,734	314,4015	19,802	177,228	7,763										
	380C1F3	19802	7760	177228	0	0	0	19,802	7,76	177,228	5671,296	248,32	19,802	177,228	7,76										
	150C1F1	4951	1941	44307	0	0	0	4,951	1,941	44,307	2171,043	122,3395	4,951	44,307	1,941										
	150C1F2	4951	1941	44307	0	0	0	4,951	1,941	44,307	1794,434	105,841	4,951	44,307	1,941										
	150C1F3	4951	1940	44307	0	0	0	4,951	1,94	44,307	1417,824	89,3105	4,951	44,307	1,94										
4	Comp. gl	5821	2154	49285	0	0	0	5,821	2,154	49,285	1207,483	64,70605	5,821	49,285	2,154	4	28043,61	1320,247	81,591	701,877	30,682				
Construc	GW / opç	2828	1049	23990	0	0	0	2,828	1,049	23,99	1377,746	62,39335	2,828	23,99	1,049	Wind angle: 0 dgr									
Permanen	380C1F1	19451	7328	167627	0	0	0	19,451	7,328	167,627	8213,723	359,072	19,451	167,627	7,328										
Wind ang	380C1F2	19451	7328	167627	0	0	0	19,451	7,328	167,627	6788,894	296,784	19,451	167,627	7,328										
	380C1F3	19451	7327	167627	0	0	0	19,451	7,327	167,627	5364,064	234,464	19,451	167,627	7,327										
	150C1F1	4863	1832	41907	0	0	0	4,863	1,832	41,907	2053,443	116,5145	4,863	41,907	1,832										
	150C1F2	4863	1832	41907	0	0	0	4,863	1,832	41,907	1697,234	100,9425	4,863	41,907	1,832										
	150C1F3	4863	1832	41907	0	0	0	4,863	1,832	41,907	1341,024	85,3705	4,863	41,907	1,832										
6	Comp. gl	5195	1931	44221	0	0	0	5,195	1,931	44,221	1083,415	57,95925	5,195	44,221	1,931	6	26980,41	1269,586	79,613	674,727	29,458				
Permanen	GW / opç	2505	932	21353	0	0	0	2,505	0,932	21,353	1226,303	55,42856	2,505	21,353	0,932	0									
Permanen	380C1F1	19177	7092	162441	0	0	0	19,177	7,092	162,441	7959,609	347,508	19,177	162,441	7,092										
	380C1F2	19177	7092	162441	0	0	0	19,177	7,092	162,441	6578,861	287,226	19,177	162,441	7,092										
	380C1F3	19177	7092	162441	0	0	0	19,177	7,092	162,441	5198,112	226,944	19,177	162,441	7,092										
	150C1F1	4794	1773	40610	0	0	0	4,794	1,773	40,61	1989,89	113,244	4,794	40,61	1,773										
	150C1F2	4794	1773	40610	0	0	0	4,794	1,773	40,61	1644,705	98,1735	4,794	40,61	1,773										
	150C1F3	4794	1773	40610	0	0	0	4,794	1,773	40,61	1299,52	83,103	4,794	40,61	1,773										
1a	Comp. gl	4618	3710	42599	0	0	0	4,618	3,71	42,599	1043,676	100,3619	4,618	42,599	3,71	1a	26139,82	2402,028	70,766	652,324	57,464				
Wind, 10	GW / opç	2226	2283	21897	0	0	0	2,226	2,283	21,897	1257,545	132,8045	2,226	21,897	2,283	Wind angle: 45 dgr									
Permanen	380C1F1	17046	14360	158203	0	0	0	17,046	14,36	158,203	7751,947	703,64	17,046	158,203	14,36										
Wind ang	380C1F2	17046	13772	156827	0	0	0	17,046	13,772	156,827	6351,494	557,766	17,046	156,827	13,772										
	380C1F3	17046	13045	155232	0	0	0	17,046	13,045	155,232	4967,424	417,44	17,046	155,232	13,045										
	150C1F1	4262	3590	39551	0	0	0	4,262	3,59	39,551	1937,999	199,351	4,262	39,551	3,59										
	150C1F2	4261	3443	39207	0	0	0	4,261	3,443	39,207	1587,884	162,877	4,261	39,207	3,443										
	150C1F3	4261	3261	38808	0	0	0	4,261	3,261	38,808	1241,856	127,7975	4,261	38,808	3,261										
1b	Comp. gl	4615	2548	45313	0	0	0	4,615	2,548	45,313	1110,169	71,88675	4,615	45,313	2,548	1b	28305,79	1679,948	70,725	707,435	39,801				
Wind, -2	GW / opç	2225	1379	22232	0	0	0	2,225	1,379	22,232	1276,784	80,88697	2,225	22,232	1,379	Wind angle: 45 dgr									
Permanen	380C1F1	17036	9748	170789	0	0	0	17,036	9,748	170,789	8368,661	477,652	17,036	170,789	9,748										
Wind ang	380C1F2	17036	9580	170644	0	0	0	17,036	9,58	170,644	6911,082	387,99	17,036	170,644	9,58										
	380C1F3	17036	9371	170479	0	0	0	17,036	9,371	170,479	5455,328	299,872	17,036	170,479	9,371										
	150C1F1	4259	2437	42697	0	0	0	4,259	2,437	42,697	2092,153	142,8375	4,259	42,697	2,437										
	150C1F2	4259	2395	42661	0	0	0	4,259	2,395	42,661	1727,771	120,422	4,259	42,661	2,395										
	150C1F3	4259	2343	42620	0	0	0	4,259	2,343	42,62	1363,84	98,4005	4,259	42,62	2,343										
3	Comp. gl	7762	5837	66862	0	0	0	7,762	5,837	66,862	1638,119	158,9186	7,762	66,862	5,837	3	31414,21	2572,754	85,82	787,138	61,554				
Wind+ice	GW / opç	3796	3604	34528	0	0	0	3,796	3,604	34,528	1982,943	209,8627	3,796	34,528	3,604	Wind angle: 45 dgr									
Permanen	380C1F1	19803	14428	183802	0	0	0	19,803	14,428	183,802	9006,298	706,972	19,803	183,802	14,428										
Wind ang	380C1F2	19803	13936	182911	0	0	0	19,803	13,936	182,911	7407,896	564,408	19,803	182,911	13,936										
	380C1F3	19803	13326	181886	0	0	0	19,803	13,326	181,886	5820,352	426,432	19,803	181,886	13,326										
	150C1F1	4951	3607	45950	0	0	0	4,951	3,607	45,95	2251,55	203,9735	4,951	45,95	3,607										
	150C1F2	4951	3484	45728	0	0	0	4,951	3,484	45,728	1851,984	168,3325	4,951	45,728	3,484										
	150C1F3	4951	3332	45471	0	0	0	4,951	3,332	45,471	1455,072	133,8545	4,951	45,471	3,332										
4	Comp. gl	5821	2728	49448	0	0	0	5,821	2,728	49,448	1211,476	78,76905	5,821	49,448	2,728	4	28165,45	1686,931	81,591	704,808	39,691				
Construc	GW / opç	2828	1464	24172	0	0	0	2,828	1,464	24,172	1388,198	86,2268	2,828	24,172	1,464	Wind angle: 45 dgr									
Permanen	380C1F1	19451	9647	168439	0	0	0	19,451	9,647	168,439	8253,511	472,703	19,451	168,439	9,647										
Wind ang	380C1F2	19451	9480	168322	0	0	0	19,451	9,48	168,322	6817,041	383,94	19,451	168,322	9,48										
	380C1F3	19451	9272	168189	0	0	0	19,451	9,272	168,189	5382,048	296,704	19,451	168,189	9,272										
	150C1F1	4863	2412	42110	0	0	0	4,863	2,412	42,11	2063,39	144,9345	4,863	42,11	2,412										
	150C1F2	4863	2370	42081	0	0	0	4,863	2,37	42,081	1704,281	122,7315	4,863	42,081	2,37										
	150C1F3	4863	2318	42047	0	0	0	4,863	2,318	42,047	1345,504	100,9225	4,863	42,047	2,318										
1a	Comp. gl	4618	6249	50434	0	0	0	4,618	6,249	50,434	1235,633	162,5674	4,618	50,434	6,249	1a	31152	4020,938	70,781	774,19	97,194				
Wind, 10	GW / opç	2227	4162	28849	0	0	0	2,227	4,162	28,849	1656,798	240,7162	2,227	28,849	4,162	Wind angle: 90 dgr									
Permanen	380C1F1	17050	24622	190595	0	0	0	17,05	24,622	190,595	9339,155	1206,478	17,05	190,595	24,622										
Wind ang	380C1F2	17050	23251	185638	0	0	0	17,05	23,251	185,638	7518,339	941,6655	17,05	185,638	23,251										
	380C1F3	17049	21553	179693	0	0	0	17,049	21,553	179,693	5750,176	689,696	17,049	179,693	21,553										
	150C1F1	4263	6156	47649	0	0	0	4,263	6,156	47,649	2334,801	325,0905	4,263	47,649	6,156										
	150C1F2	4262	5813	46409	0	0	0	4,262	5,813	46,409	1879,565	258,8675	4,262	46,409	5,813										
	150C1F3	4262	5388	44923	0	0	0	4,262	5,388	44,923	1437,536	195,857	4,262	44,923	5,388										
1b	Comp. gl	4615	3264	46248	0	0	0	4,615	3,264	46,248	1133,076	89,42875	4,615	46,248	3,264	1b	28918,61	2137,096	70,725	722,219	51,024				
Wind, -2	GW / opç	2225	1906	23220	0	0	0	2,225	1,906	23,22	1333,525	111,1526	2,225	23,22	1,906	Wind angle: 90 dgr									
Permanen	380C1F1	17036	12643	174784	0	0	0	17,036	12,643	174,784	8564,416	619,507	17,036	174,784	12,643										
Wind ang	380C1F2	17036	12258	174101	0	0	0	17,036	12,258	174,101	7051,091	496,449	17,036	174,101	12,258										
	380C1F3	17036	11782	173316	0	0	0	17,036	11,782	173,316	5546,112	377,024	17,036	173,316	11,782										
	150C1F1	4259	3161	43696	0	0	0	4,259	3,161	43,696	2141,104	178,3135	4,259	43,696	3,161										
	150C1F2	4259	3065	43525	0	0	0	4,259	3,065	43,525	1762,763	147,557	4,259	43,525	3,065										
	150C1F3	4259	2945	43329	0	0	0	4,259	2,945	43,329	1386,528	117,6645	4,259	43,329	2,945										
3	Comp. gl	7764	9752	77198	0	0	0	7,764	9,752	77,198	1891,351	254,8402	7,764	77,198	9,752	3	35215,1	4045,424	85,833	879,681	97,869				
Wind+ice	GW / opç	3798	6497	43749	0	0	0	3,798	6,497	43,749	2512,505	376,0092	3,798	43,749	6,497	Wind angle: 90 dgr									
Permanen	380C1F1	19806	23003	206105	0	0	0	19,806	23,003	206,105	10099,15	1127,147	19,806	206,105	23,003										
Wind ang	380C1F2	19806	21856	202544	0	0	0	19,806	21,856	202,544	8203,032	885,168	19,806	202,544	21,856										
	380C1F3	19805	20437	198338	0	0	0	19,805	20,437	198,338	6346,816	653,984	19,805	198,338	20,437										
	150C1F1	4952	5751	51526	0	0	0	4,952	5,751	51,526	2524,774	309,035	4,952	51,526	5,751										
	150C1F2	4951	5464	50636	0	0	0	4,951	5,464	50,636	2050,758	248,5225	4,951	50,636	5,464										
	150C1F3	4951	5109	49585	0	0	0	4,951	5,109	49,585	1586,72	190,7185	4,951	49,585	5,109										
4	Comp. gl	5821	3433	50119	0	0	0	5,821	3,433	50,119	1227,916	96,04155	5,821	50,119	3,433	4	28657,35	2138,969	81,591	716,672	50,791				
Construc	GW / opç	2828	1979	24882	0	0	0	2,828	1,979	24,882	1428,973	115,8033	2,828	24,882	1,979	Wind angle: 90 dgr									
Permanen	380C1F1	19451	12511	171700	0	0	0	19,451	12,511	171,7	8413,3	613,039	19,451	171,7	12,511										
Wind ang	380C1F2	19451	12131	171140	0	0	0	19,451	12,131	171,14	6931,17	491,3055	19,451	171,14	12,131										
	380C1F3	19451	11661	170497	0	0	0	19,451	11,661	170,497	5455,904	373,152	19,451	170,497	11,661										
	150C1F1	4863	3128	42925	0	0	0	4,863	3,128	42,925	2103,325	180,0185	4,863	42,925	3,128										
	150C1F2	4863	3033	42785	0	0	0	4,863	3,033	42,785	1732,793	149,583	4,863	42,785	3,033										
	150C1F3	4863	2915	42624	0	0	0	4,863	2,915	42,624	1363,968	120,0265	4,863	42,624	2,915										
1a	Comp. gl	4618	4106	43575	0	0	0	4,618	4,106	43,575	1067,588	110,0639	4,618	43,575	4,106	1a	26771,52	2654,817	70,769	667,625	63,667				
Wind, 10	GW / opç	2226	2577	22837	0	0	0	2,226	2,577	22,837	1311,529	149,6889	2,226	22,837	2,577	Wind angle: -45 dgr									
Permanen	380C1F1	17047	15962	162308	0	0	0	17,047	15,962	162,308	7953,092	782,138	17,047	162,308	15,962										
Wind ang	380C1F2	17046	15252	160427	0	0	0	17,046	15,252	160,427	6497,294	617,706	17,046	160,427	15,252										
	380C1F3	17046	14373	158235	0	0	0	17,046	14,373	158,235	5063,52	459,936	17,046	158,235	14,373										
	150C1F1	4262	3991	40577	0	0	0	4,262	3,991	40,577	1988,273	219	4,262	40,577	3,991										
	150C1F2	4262	3813	40107	0	0	0	4,262	3,813	40,107	1624,334	177,8675	4,262	40,107	3,813										
	150C1F3	4262	3593	39559	0	0	0	4,262	3,593	39,559	1265,888	138,417	4,262	39,559	3,593										
1b	Comp. gl	4615	2661	45417	0	0	0	4,615	2,661	45,417	1112,717	74,65525	4,615	45,417	2,661	1b	28373,87	1752,118	70,725	709,076	41,573				
Wind, -2	GW / opç	2225	1462	22344	0	0	0	2,225	1,462	22,344	1283,216	85,65366	2,225	22,344	1,462	Wind angle: -45 dgr									
Permanen	380C1F1	17036	10205	171233	0	0	0	17,036	10,205	171,233	8390,417	500,045	17,036	171,233	10,205										
Wind ang	380C1F2	17036	10003	171027	0	0	0	17,036	10,003	171,027	6926,594	405,1215	17,036	171,027	10,003										
	380C1F3	17036	9752	170792	0	0	0	17,036	9,752	170,792	5465,344	312,064	17,036	170,792	9,752										
	150C1F1	4259	2551	42808	0	0	0	4,259	2,551	42,808	2097,592	148,4235	4,259	42,808	2,551										
	150C1F2	4259	2501	42757	0	0	0	4,259	2,501	42,757	1731,659	124,715	4,259	42,757	2,501										

	150C1F34259	2438	42698	0	0	0	4,259	2,438	42,698	1366,336	101,4405	4,259	42,698	2,438										
3	Comp.gl 7762	6450	68138	0	0	0	7,762	6,45	68,138	1669,381	173,9371	7,762	68,138	6,45		3	31876,84	2803,127	85,821	798,353	67,235			
Wind+ice	GW / opç3796	4058	35760	0	0	0	3,796	4,058	35,76	2053,697	235,9359	3,796	35,76	4,058	Wind angle: -45 dgr									
Permane	380C1F119804	15768	186490	0	0	0	19,804	15,768	186,49	9138,01	772,632	19,804	186,49	15,768										
Wind ang	380C1F219803	15174	185252	0	0	0	19,803	15,174	185,252	7502,706	614,547	19,803	185,252	15,174										
0	380C1F319803	14439	183822	0	0	0	19,803	14,439	183,822	5882,304	462,048	19,803	183,822	14,439										
	150C1F14951	3942	46622	0	0	0	4,951	3,942	46,622	2284,478	220,3885	4,951	46,622	3,942										
	150C1F24951	3794	46313	0	0	0	4,951	3,794	46,313	1875,677	180,8875	4,951	46,313	3,794										
	150C1F34951	3610	45956	0	0	0	4,951	3,61	45,956	1470,592	142,7505	4,951	45,956	3,61										
4	Comp.gl 5821	2840	49522	0	0	0	5,821	2,84	49,522	1213,289	81,51305	5,821	49,522	2,84		4	28219,76	1758,541	81,591	706,117	41,45			
Construc	GW / opç2828	1545	24251	0	0	0	2,828	1,545	24,251	1392,735	90,87863	2,828	24,251	1,545	Wind angle: -45 dgr									
Permane	380C1F119451	10101	168800	0	0	0	19,451	10,101	168,8	8271,2	494,949	19,451	168,8	10,101										
Wind ang	380C1F219451	9900	168633	0	0	0	19,451	9,9	168,633	6829,637	400,95	19,451	168,633	9,9										
	380C1F319451	9651	168442	0	0	0	19,451	9,651	168,442	5390,144	308,832	19,451	168,442	9,651										
	150C1F14863	2525	42200	0	0	0	4,863	2,525	42,2	2067,8	150,4715	4,863	42,2	2,525										
	150C1F24863	2475	42158	0	0	0	4,863	2,475	42,158	1707,399	126,984	4,863	42,158	2,475										
	150C1F34863	2413	42111	0	0	0	4,863	2,413	42,111	1347,552	103,9625	4,863	42,111	2,413										
1a	Comp.gl 3462	1387	31599	0	0	0	3,462	1,387	31,599	774,1755	41,0786	3,462	31,599	1,387		1a	19396,11	912,8136	53,059	485,035	21,297			
Wind, 10	GW / opç1669	670	15226	0	0	0	1,669	0,67	15,226	874,4292	39,74654	1,669	15,226	0,67	Wind angle: 0 dgr									
Permane	380C1F112781	5133	116856	0	0	0	12,781	5,133	116,856	5725,944	251,517	12,781	116,856	5,133										
Wind ang	380C1F212781	5131	116856	0	0	0	12,781	5,131	116,856	4732,668	207,8055	12,781	116,856	5,131										
	380C1F312781	5128	116856	0	0	0	12,781	5,128	116,856	3739,392	164,096	12,781	116,856	5,128										
	150C1F13195	1283	29214	0	0	0	3,195	1,283	29,214	1431,486	80,4395	3,195	29,214	1,283										
	150C1F23195	1283	29214	0	0	0	3,195	1,283	29,214	1183,167	69,534	3,195	29,214	1,283										
	150C1F33195	1282	29214	0	0	0	3,195	1,282	29,214	934,848	58,5965	3,195	29,214	1,282										
1b	Comp.gl 3461	1577	36072	0	0	0	3,461	1,577	36,072	883,764	45,73155	3,461	36,072	1,577		1b	22736,42	1055,236	53,03	568,297	24,849			
Wind, -2	GW / opç1668	769	17575	0	0	0	1,668	0,769	17,575	1009,332	45,43135	1,668	17,575	0,769	Wind angle: 0 dgr									
Permane	380C1F112774	6002	137240	0	0	0	12,774	6,002	137,24	6724,76	294,098	12,774	137,24	6,002										
Wind ang	380C1F212774	6001	137240	0	0	0	12,774	6,001	137,24	5558,22	243,0405	12,774	137,24	6,001										
	380C1F312774	6000	137240	0	0	0	12,774	6	137,24	4391,68	192	12,774	137,24	6										
	150C1F13193	1500	34310	0	0	0	3,193	1,5	34,31	1681,19	91,0615	3,193	34,31	1,5										
	150C1F23193	1500	34310	0	0	0	3,193	1,5	34,31	1389,555	78,3115	3,193	34,31	1,5										
	150C1F33193	1500	34310	0	0	0	3,193	1,5	34,31	1097,92	65,5615	3,193	34,31	1,5										
3	Comp.gl 6606	2468	56251	0	0	0	6,606	2,468	56,251	1378,15	74,0083	6,606	56,251	2,468		3	25290,41	1188,848	68,113	635,115	27,842			
Wind+ice	GW / opç3238	1216	27659	0	0	0	3,238	1,216	27,659	1588,456	72,29576	3,238	27,659	1,216	Wind angle: 0 dgr									
Permane	380C1F115538	6444	146988	0	0	0	15,538	6,444	146,988	7202,412	315,756	15,538	146,988	6,444										
Wind ang	380C1F215538	6442	146988	0	0	0	15,538	6,442	146,988	5953,014	260,901	15,538	146,988	6,442										
	380C1F315538	6440	146988	0	0	0	15,538	6,44	146,988	4703,616	206,08	15,538	146,988	6,44										
	150C1F13885	1611	36747	0	0	0	3,885	1,611	36,747	1800,603	100,3065	3,885	36,747	1,611										
	150C1F23885	1611	36747	0	0	0	3,885	1,611	36,747	1488,254	86,613	3,885	36,747	1,611										
	150C1F33885	1610	36747	0	0	0	3,885	1,61	36,747	1175,904	72,8875	3,885	36,747	1,61										
4	Comp.gl 4665	1803	41233	0	0	0	4,665	1,803	41,233	1010,209	51,73675	4,665	41,233	1,803		4	23073,31	1082,899	63,885	577,606	25,257			
Construc	GW / opç2271	879	20083	0	0	0	2,271	0,879	20,083	1153,367	52,20693	2,271	20,083	0,879	Wind angle: 0 dgr									
Permane	380C1F115186	6021	137677	0	0	0	15,186	6,021	137,677	6746,173	295,029	15,186	137,677	6,021										
Wind ang	380C1F215186	6020	137678	0	0	0	15,186	6,02	137,678	5575,959	243,81	15,186	137,678	6,02										
	380C1F315186	6019	137678	0	0	0	15,186	6,019	137,678	4405,696	192,608	15,186	137,678	6,019										
	150C1F13797	1505	34419	0	0	0	3,797	1,505	34,419	1686,531	94,6285	3,797	34,419	1,505										
	150C1F23797	1505	34419	0	0	0	3,797	1,505	34,419	1393,97	81,836	3,797	34,419	1,505										
	150C1F33797	1505	34419	0	0	0	3,797	1,505	34,419	1101,408	69,0435	3,797	34,419	1,505										
6	Comp.gl 3462	1380	31600	0	0	0	3,462	1,38	31,6	774,2	40,9071	3,462	31,6	1,38		6	19396,26	908,011	53,059	485,039	21,179			
Permane	GW / opç1669	665	15226	0	0	0	1,669	0,665	15,226	874,4292	39,45939	1,669	15,226	0,665	0									
Permane	380C1F112781	5102	116857	0	0	0	12,781	5,102	116,857	5725,993	249,998	12,781	116,857	5,102										
	380C1F212781	5102	116857	0	0	0	12,781	5,102	116,857	4732,709	206,631	12,781	116,857	5,102										
	380C1F312781	5102	116857	0	0	0	12,781	5,102	116,857	3739,424	163,264	12,781	116,857	5,102										
	150C1F13195	1276	29214	0	0	0	3,195	1,276	29,214	1431,486	80,0965	3,195	29,214	1,276										
	150C1F23195	1276	29214	0	0	0	3,195	1,276	29,214	1183,167	69,2505	3,195	29,214	1,276										
	150C1F33195	1276	29214	0	0	0	3,195	1,276	29,214	934,848	58,4045	3,195	29,214	1,276										
1a	Comp.gl 3463	3379	35022	0	0	0	3,463	3,379	35,022	858,039	89,88465	3,463	35,022	3,379		1a	21631,7	2184,573	53,064	539,104	52,515			
Wind, 10	GW / opç1669	2140	18636	0	0	0	1,669	2,14	18,636	1070,265	124,1686	1,669	18,636	2,14	Wind angle: 45 dgr									
Permane	380C1F112782	13189	131415	0	0	0	12,782	13,189	131,415	6439,335	646,261	12,782	131,415	13,189										
Wind ang	380C1F212782	12580	129558	0	0	0	12,782	12,58	129,558	5247,099	509,49	12,782	129,558	12,58										
	380C1F312782	11828	127384	0	0	0	12,782	11,828	127,384	4076,288	378,496	12,782	127,384	11,828										
	150C1F13196	3297	32854	0	0	0	3,196	3,297	32,854	1609,846	179,131	3,196	32,854	3,297										
	150C1F23195	3145	32389	0	0	0	3,195	3,145	32,389	1311,755	144,945	3,195	32,389	3,145										
	150C1F33195	2957	31846	0	0	0	3,195	2,957	31,846	1019,072	112,1965	3,195	31,846	2,957										
1b	Comp.gl 3461	2159	36425	0	0	0	3,461	2,159	36,425	892,4125	59,99055	3,461	36,425	2,159		1b	22969,97	1426,468	53,03	573,922	33,968			
Wind, -2	GW / opç1668	1192	17961	0	0	0	1,668	1,192	17,961	1031,5	69,72424	1,668	17,961	1,192	Wind angle: 45 dgr									
Permane	380C1F112774	8350	138766	0	0	0	12,774	8,35	138,766	6799,534	409,15	12,774	138,766	8,35										
Wind ang	380C1F212774	8178	138553	0	0	0	12,774	8,178	138,553	5611,397	331,209	12,774	138,553	8,178										
	380C1F312774	7966	138310	0	0	0	12,774	7,966	138,31	4425,92	254,912	12,774	138,31	7,966										
	150C1F13193	2087	34692	0	0	0	3,193	2,087	34,692	1699,908	119,8245	3,193	34,692	2,087										
	150C1F23193	2045	34638	0	0	0	3,193	2,045	34,638	1402,839	100,384	3,193	34,638	2,045										
	150C1F33193	1991	34577	0	0	0	3,193	1,991	34,577	1106,464	81,2735	3,193	34,577	1,991										
3	Comp.gl 6606	5542	60127	0	0	0	6,606	5,542	60,127	1473,112	149,3213	6,606	60,127	5,542		3	26804,22	2350,866	68,117	671,72	56,509			
Wind+ice	GW / opç3239	3474	31567	0	0	0	3,239	3,474	31,567	1812,893	201,9735	3,239	31,567	3,474	Wind angle: 45 dgr									
Permane	380C1F115539	13210	155921	0	0	0	15,539	13,21	155,921	7640,129	647,29	15,539	155,921	13,21										
Wind ang	380C1F215539	12705	154736	0	0	0	15,539	12,705	154,736	6266,808	514,5525	15,539	154,736	12,705										
	380C1F315539	12080	153364	0	0	0	15,539	12,08	153,364	4907,648	386,56	15,539	153,364	12,08										
	150C1F13885	3302	38980	0	0	0	3,885	3,302	38,98	1910,02	183,1655	3,885	38,98	3,302										
	150C1F23885	3176	38684	0	0	0	3,885	3,176	38,684	1566,702	149,9955	3,885	38,684	3,176										
	150C1F33885	3020	38341	0	0	0	3,885	3,02	38,341	1226,912	118,0075	3,885	38,341	3,02										
4	Comp.gl 4665	2379	41456	0	0	0	4,665	2,379	41,456	1015,672	67,84875	4,665	41,456	2,379		4	23245,35	1451,603	63,885	581,748	34,315			
Construc	GW / opç2271	1296	20328	0	0	0	2,271	1,296	20,328	1167,437	76,15524	2,271	20,328	1,296	Wind angle: 45 dgr									
Permane	380C1F115186	8354	138827	0	0	0	15,186	8,354	138,827	6802,523	409,346	15,186	138,827	8,354										
Wind ang	380C1F215186	8184	138665	0	0	0	15,186	8,184	138,665	5615,933	331,452	15,186	138,665	8,184										
	380C1F315186	7974	138479	0	0	0	15,186	7,974	138,479	4431,328	255,168	15,186	138,479	7,974										
	150C1F13797	2088	34707	0	0	0	3,797	2,088	34,707	1700,643	123,1955	3,797	34,707	2,088										
	150C1F23797	2046	34666	0	0	0	3,797	2,046	34,666	1403,973	103,7465	3,797	34,666	2,046										
	150C1F33797	1994	34620	0	0	0	3,797	1,994	34,62	1107,84	84,6915	3,797	34,62	1,994										
1a	Comp.gl 3463	6009	44934	0	0	0	3,463	6,009	44,934	1100,883	154,3197	3,463	44,934	6,009		1a	27933,38	3859,687	53,077	692,794	93,632			
Wind, 10	GW / opç1670	4076	26872	0	0	0	1,67	4,076	26,872	1543,259	235,3539	1,67	26,872	4,076	Wind angle: 90 dgr									
Permane	380C1F112786	23805	171934	0	0	0	12,786	23,805	171,934	8424,766	1166,445	12,786	171,934	23,805										
Wind ang	380C1F212785	22393	166026	0	0	0	12,785	22,393	166,026	6724,053	906,9165	12,785	166,026	22,393										
	380C1F312785	20640	158830	0	0	0	12,785	20,64	158,83	5082,56	660,48	12,785	158,83	20,64										
	150C1F13196	5951	42983	0	0	0	3,196	5,951	42,983	2106,167	309,177	3,196	42,983	5,951										
	150C1F23196	5598	41507	0	0	0	3,196	5,598	41,507	1681,034	244,297	3,196	41,507	5,598										
	150C1F33196	5160	39708	0	0	0	3,196	5,16	39,708	1270,656	182,698	3,196	39,708	5,16										
1b	Comp.gl 3461	2893	37768	0	0	0	3,461	2,893	37,768	925,316	77,97355	3,461	37,768	2,893		1b	23851,6	1895,316	53,035	595,215	45,474			
Wind, -2	GW / opç1669	1737	19345	0	0	0	1,669	1,737	19,345	1110,983	101,0244	1,669	19,345	1,737	Wind angle: 90 dgr									
Permane	380C1F112775	11320	144512	0	0	0	12,775	11,32	144,512	7081,088	554,68	12,775	144,512	11,32										
Wind ang	380C1F212774	10923	143544	0	0	0	12,774	10,923	143,544	5813,532	442,3815	12,774	143,544	10,923										
	380C1F312774	10432	142426	0	0	0	12,774	10,432	142,426	4557,632	333,824	12,774	142,426	10,432										
	150C1F13194	2830	36128	0	0	0	3,194	2,83	36,128	1770,272	156,237	3,194	36,128	2,83										
	150C1F23194	2731	35886	0	0	0	3,194	2,731	35,886	1453,383	128,1725	3,194	35,886	2,731										
	150C1F33194	2608	35606	0	0	0	3,194	2,608	35,606	1139,392	101,023	3,194	35,606	2,608										
3	Comp.gl 6608	9529	72110	0	0	0	6,608	9,529	72,11	1766,695	247,0069	6,608	72,11	9,529		3	31535,02	3864,019	68,132	787,123	93,819			
Wind+ice	GW / opç3241	6414	41862	0	0	0	3,241	6,414	41,862	2404,135	370,8192	3,241	41,862	6,414	Wind angle: 90 dgr									
Permane	380C1F115543	22042	184145	0	0	0	15,543	22,042	184,145	9023,105	1080,058	15,543	184,145	22,042										
Wind ang	380C1F215542	20861	179791	0	0	0	15,542	20,861	179,791	7281,536	844,8705	15,542	179,791	20,861										
	380C1F315541	19398	174585	0	0	0	15,541	19,398	174,585	5586,72	620,736	15,541	174,585	19,398										
	150C1F13886	5511	46036	0	0	0	3,886	5,511	46,036	2255,764	291,412	3,886	46,036	5,511										
	150C1F23886	5215	44948	0	0	0	3,886	5,215	44,948	1820,394	232,5805	3,886	44,948	5,215										
	150C1F33885	4849	43646	0	0	0	3,885	4,849	43,646	1396,672	176,5355	3,885	43,646	4,849										
4	Comp.gl 4665	3094	42346	0	0	0	4,665	3,094	42,346	1037,477	85,36625	4,665	42,346	3,094		4	23915,3	1911,409	63,888	597,918	45,603			
Construc	GW / opç2271	1821	21255	0	0	0	2,271	1,821	21,255	1220,675	106,306	2,271	21,255	1,821	Wind angle: 90 dgr									
Permane	380C1F115187	11269	143280	0	0	0	15,187	11,269	143,28	7020,72	552,181	15,187	143,28	11,269										
Wind ang	380C1F215187	10881	142523	0	0	0	15,187	10,881	142,523	5772,182	440,6805	15,187	142,523	10,881										
	380C1F315187	10401	141650	0	0	0	15,187	10,401	141,65	4532,8	332,832	15,187	141,65	10,401										
	150C1F13797	2817	35820	0	0	0	3,797	2,817	35,82	1755,18	158,9165	3,797	35,82	2,817										
	150C1F23797	2720	35631	0	0	0	3,797	2,72	35,631	1443,056	131,0435	3,797	35,631	2,72										
	150C1F33797	2600	35413	0	0	0	3,797	2,6	35,413	1133,216	104,0835	3,797	35,413	2,6										
1a	Comp.gl 3463	3790	36327	0	0	0	3,463	3,79	36,327	890,0115	99,95415	3,463	36,327	3,79		1a	22473,1	2446,526	53,068	559,537	58,942			
Wind, 10	GW / opç1670	2446	19823	0	0	0	1,67	2,446	19,823	1138,435	141,743	1,67	19,823	2,446	Wind angle: -45 dgr									
Permane	380C1F112783	14850	136867	0	0	0	12,783	14,85	136,867	6706,483	727,65	12,783	136,867	14,85										
Wind ang	380C1F212782	14113	134385	0	0	0	12,782	14,113	134,385	5442,593	571,5765	12,782	134,385	14,113										
	380C1F312782	13202	131458	0	0	0	12,782	13,202	131,458	4206,656	422,464	12,782	131,458	13,202										
	150C1F13196	3712	34217	0	0	0	3,196	3,712	34,217	1676,633	199,466	3,196	34,217	3,712										
	150C1F23196	3528	33596	0	0	0	3,196	3,528	33,596	1360,638	160,462	3,196	33,596	3,528										
	150C1F33196	3301	32864	0	0	0	3,196	3,301	32,864	1051,648	123,21	3,196	32,864	3,301										
1b	Comp.gl 3461	2275	36576	0	0	0	3,461	2,275	36,576	896,112	62,83255	3,461	36,576	2,275		1b	23069,78	1500,078	53,032	576,329	35,775			
Wind, -2	GW / opç1668	1277	18122	0	0	0	1,668	1,277	18,122	1040,746	74,60579	1,668	18,122	1,277	Wind angle: -45 dgr									
Permane	380C1F112774	8816	139418	0	0	0	12,774	8,816	139,418	6831,482	431,984	12,774	139,418	8,816										
Wind ang	380C1F212774	8609	139116	0	0	0	12,774	8,609	139,116	5634,198	348,6645	12,774	139,116	8,609										
	380C1F312774	8354	138771	0	0	0	12,774	8,354	138,771	4440,672	267,328	12,774	138,771	8,354										
	150C1F13194	2204	34854	0	0	0	3,194	2,204	34,854	1707,846	125,563	3,194	34,854	2,204										
	150C1F23194	2152	34779	0	0	0	3,194	2,152	34,779	1408,55	104,723	3,194	34,779	2,152										
	150C1F33193	2088	34693	0	0	0	3,193	2,088	34,693	1110,176	84,3775	3,193	34,693	2,088										
3	Comp.gl 6607	6166	61652	0	0	0	6,607	6,166	61,652	1510,474	164,6114	6,607	61,652	6,166		3	27401,08	2587,11	68,12	686,212	62,333			
Wind+ice	GW / opç3239	3937	32993	0	0	0	3,239	3,937	32,993	1894,788	228,5636	3,239	32,993	3,937	Wind angle: -45 dgr									
Permane	380C1F115540	14587	159465	0	0	0	15,54	14,587	159,465	7813,785	714,763	15,54	159,465	14,587										
Wind ang	380C1F215540	13976	157840	0	0	0	15,54	13,976	157,84	6392,52	566,028	15,54	157,84	13,976										
0	380C1F315539	13221	155949	0	0	0	15,539	13,221	155,949	4990,368	423,072	15,539	155,949	13,221										
	150C1F13885	3647	39866	0	0	0	3,885	3,647	39,866	1953,434	200,0705	3,885	39,866	3,647										
	150C1F23885	3494	39460	0	0	0	3,885	3,494	39,46	1598,13	162,8745	3,885	39,46	3,494										
	150C1F33885	3305	38987	0	0	0	3,885	3,305	38,987	1247,584	127,1275	3,885	38,987	3,305										
4	Comp.gl 4665	2492	41555	0	0	0	4,665	2,492	41,555	1018,098	70,61725	4,665	41,555	2,492		4	23320,2	1524,081	63,885	583,553	36,095			
Construc	GW / opç2271	1378	20433	0	0	0	2,271	1,378	20,433	1173,467	80,8645	2,271	20,433	1,378	Wind angle: -45 dgr									
Permane	380C1F115186	8813	139326	0	0	0	15,186	8,813	139,326	6826,974	431,837	15,186	139,326	8,813										
Wind ang	380C1F215186	8610	139095	0	0	0	15,186	8,61	139,095	5633,348	348,705	15,186	139,095	8,61										

		380C1F315186	8358	138831	0	0	0	15,186	8,358	138,831	4442,592	267,456	15,186	138,831	8,358										
		150C1F13797	2203	34831	0	0	0	3,797	2,203	34,831	1706,719	128,8305	3,797	34,831	2,203										
		150C1F23797	2152	34774	0	0	0	3,797	2,152	34,774	1408,347	108,0395	3,797	34,774	2,152										
		150C1F33797	2089	34708	0	0	0	3,797	2,089	34,708	1110,656	87,7315	3,797	34,708	2,089										
1a		Comp. gl	4617	1761	-40155	0	0	0	4,617	1,761	-40,155	-983,798	52,60935	4,617	-40,155	1,761	1a		-20052,4	890,707	57,978	-502,885	22,056		
Wind, 10		GW / opg	2226	852	-19378	0	0	0	2,226	0,852	-19,378	-1112,88	50,62212	2,226	-19,378	0,852	Wind angle:	0 dgr							
Permaner		380C1F1	17045	6483	-147784	0	0	0	17,045	6,483	-147,784	-7241,42	317,667	17,045	-147,784	6,483									
Wind ang		380C1F2	17045	6481	-147784	0	0	0	17,045	6,481	-147,784	-5985,25	262,4805	17,045	-147,784	6,481									
		380C1F3	17045	6479	-147784	0	0	0	17,045	6,479	-147,784	-4729,09	207,328	17,045	-147,784	6,479									
		150C1F1	0	0	0	0	0	0	0	0	0	0	0	0	0	0									
		150C1F2	0	0	0	0	0	0	0	0	0	0	0	0	0	0									
		150C1F3	0	0	0	0	0	0	0	0	0	0	0	0	0	0									
1b		Comp. gl	4615	1970	-45077	0	0	0	4,615	1,97	-45,077	-1104,39	57,72575	4,615	-45,077	1,97	1b		-22993,2	1016,275	57,948	-576,357	25,194		
Wind, -20		GW / opg	2225	961	-21970	0	0	0	2,225	0,961	-21,97	-1261,74	56,88123	2,225	-21,97	0,961	Wind angle:	0 dgr							
Permaner		380C1F1	17036	7422	-169770	0	0	0	17,036	7,422	-169,77	-8318,73	363,678	17,036	-169,77	7,422									
Wind ang		380C1F2	17036	7421	-169770	0	0	0	17,036	7,421	-169,77	-6875,69	300,5505	17,036	-169,77	7,421									
		380C1F3	17036	7420	-169770	0	0	0	17,036	7,42	-169,77	-5432,64	237,44	17,036	-169,77	7,42									
		150C1F1	0	0	0	0	0	0	0	0	0	0	0	0	0	0									
		150C1F2	0	0	0	0	0	0	0	0	0	0	0	0	0	0									
		150C1F3	0	0	0	0	0	0	0	0	0	0	0	0	0	0									
3		Comp. gl	7762	2793	-63692	0	0	0	7,762	2,793	-63,692	-1560,45	84,3406	7,762	-63,692	2,793	3		-24889,5	1109,341	70,964	-626,646	27,455		
Wind+ice,		GW / opg	3796	1374	-31270	0	0	0	3,796	1,374	-31,27	-1795,84	81,79378	3,796	-31,27	1,374	Wind angle:	0 dgr							
Permaner		380C1F1	19802	7765	-177228	0	0	0	19,802	7,765	-177,228	-8684,17	380,485	19,802	-177,228	7,765									
Wind ang		380C1F2	19802	7763	-177228	0	0	0	19,802	7,763	-177,228	-7177,73	314,4015	19,802	-177,228	7,763									
		380C1F3	19802	7760	-177228	0	0	0	19,802	7,76	-177,228	-5671,3	248,32	19,802	-177,228	7,76									
		150C1F1	0	0	0	0	0	0	0	0	0	0	0	0	0	0									
		150C1F2	0	0	0	0	0	0	0	0	0	0	0	0	0	0									
		150C1F3	0	0	0	0	0	0	0	0	0	0	0	0	0	0									
4		Comp. gl	5821	2154	-49285	0	0	0	5,821	2,154	-49,285	-1207,48	64,70605	5,821	-49,285	2,154	4		-22951,9	1017,419	67,002	-576,156	25,186		
Construct		GW / opg	2828	1049	-23990	0	0	0	2,828	1,049	-23,99	-1377,75	62,39335	2,828	-23,99	1,049	Wind angle:	0 dgr							
Permaner		380C1F1	19451	7328	-167627	0	0	0	19,451	7,328	-167,627	-8213,72	359,072	19,451	-167,627	7,328									
Wind ang		380C1F2	19451	7328	-167627	0	0	0	19,451	7,328	-167,627	-6788,89	296,784	19,451	-167,627	7,328									
		380C1F3	19451	7327	-167627	0	0	0	19,451	7,327	-167,627	-5364,06	234,464	19,451	-167,627	7,327									
		150C1F1	0	0	0	0	0	0	0	0	0	0	0	0	0	0									
		150C1F2	0	0	0	0	0	0	0	0	0	0	0	0	0	0									
		150C1F3	0	0	0	0	0	0	0	0	0	0	0	0	0	0									
6		Comp. gl	5195	1931	-44221	0	0	0	5,195	1,931	-44,221	-1083,41	57,95925	5,195	-44,221	1,931	6		-22046,3	975,0658	65,231	-552,897	24,139		
Permaner		GW / opg	2505	932	-21353	0	0	0	2,505	0,932	-21,353	-1226,3	55,42856	2,505	-21,353	0,932	0								
Permaner		380C1F1	19177	7092	-162441	0	0	0	19,177	7,092	-162,441	-7959,61	347,508	19,177	-162,441	7,092									
		380C1F2	19177	7092	-162441	0	0	0	19,177	7,092	-162,441	-6578,86	287,226	19,177	-162,441	7,092									
		380C1F3	19177	7092	-162441	0	0	0	19,177	7,092	-162,441	-5198,11	226,944	19,177	-162,441	7,092									
		150C1F1	0	0	0	0	0	0	0	0	0	0	0	0	0	0									
		150C1F2	0	0	0	0	0	0	0	0	0	0	0	0	0	0									
		150C1F3	0	0	0	0	0	0	0	0	0	0	0	0	0	0									
1a		Comp. gl	4618	4106	-43575	0	0	0	4,618	4,106	-43,575	-1067,59	110,0639	4,618	-43,575	4,106	1a		-21893	2119,533	57,983	-547,382	52,27		
Wind, 10		GW / opg	2226	2577	-22837	0	0	0	2,226	2,577	-22,837	-1311,53	149,6889	2,226	-22,837	2,577	Wind angle:	45 dgr							
Permaner		380C1F1	17047	15962	-162308	0	0	0	17,047	15,962	-162,308	-7953,09	782,138	17,047	-162,308	15,962									
Wind ang		380C1F2	17046	15252	-160427	0	0	0	17,046	15,252	-160,427	-6497,29	617,706	17,046	-160,427	15,252									
		380C1F3	17046	14373	-158235	0	0	0	17,046	14,373	-158,235	-5063,52	459,936	17,046	-158,235	14,373									
		150C1F1	0	0	0	0	0	0	0	0	0	0	0	0	0	0									
		150C1F2	0	0	0	0	0	0	0	0	0	0	0	0	0	0									
		150C1F3	0	0	0	0	0	0	0	0	0	0	0	0	0	0									
1b		Comp. gl	4615	2661	-45417	0	0	0	4,615	2,661	-45,417	-1112,72	74,65525	4,615	-45,417	2,661	1b		-23178,3	1377,539	57,948	-580,813	34,083		
Wind, -20		GW / opg	2225	1462	-22344	0	0	0	2,225	1,462	-22,344	-1283,22	85,65366	2,225	-22,344	1,462	Wind angle:	45 dgr							
Permaner		380C1F1	17036	10205	-171233	0	0	0	17,036	10,205	-171,233	-8390,42	500,045	17,036	-171,233	10,205									
Wind ang		380C1F2	17036	10003	-171027	0	0	0	17,036	10,003	-171,027	-6926,59	405,1215	17,036	-171,027	10,003									
		380C1F3	17036	9752	-170792	0	0	0	17,036	9,752	-170,792	-5465,34	312,064	17,036	-170,792	9,752									
		150C1F1	0	0	0	0	0	0	0	0	0	0	0	0	0	0									
		150C1F2	0	0	0	0	0	0	0	0	0	0	0	0	0	0									
		150C1F3	0	0	0	0	0	0	0	0	0	0	0	0	0	0									
3		Comp. gl	7762	6450	-68138	0	0	0	7,762	6,45	-68,138	-1669,38	173,9371	7,762	-68,138	6,45	3		-26246,1	2259,1	70,968	-659,462	55,889		
Wind+ice,		GW / opg	3796	4058	-35760	0	0	0	3,796	4,058	-35,76	-2053,7	235,9359	3,796	-35,76	4,058	Wind angle:	45 dgr							
Permaner		380C1F1	19804	15768	-186490	0	0	0	19,804	15,768	-186,49	-9138,01	772,632	19,804	-186,49	15,768									
Wind ang		380C1F2	19803	15174	-185252	0	0	0	19,803	15,174	-185,252	-7502,71	614,547	19,803	-185,252	15,174									
		380C1F3	19803	14439	-183822	0	0	0	19,803	14,439	-183,822	-5882,3	462,048	19,803	-183,822	14,439									
		150C1F1	0	0	0	0	0	0	0	0	0	0	0	0	0	0									
		150C1F2	0	0	0	0	0	0	0	0	0	0	0	0	0	0									
		150C1F3	0	0	0	0	0	0	0	0	0	0	0	0	0	0									
4		Comp. gl	5821	2840	-49522	0	0	0	5,821	2,84	-49,522	-1213,29	81,51305	5,821	-49,522	2,84	4		-23097	1377,123	67,002	-579,648	34,037		
Construct		GW / opg	2828	1545	-24251	0	0	0	2,828	1,545	-24,251	-1392,73	90,87863	2,828	-24,251	1,545	Wind angle:	45 dgr							
Permaner		380C1F1	19451	10101	-168800	0	0	0	19,451	10,101	-168,8	-8271,2	494,949	19,451	-168,8	10,101									
Wind ang		380C1F2	19451	9900	-168633	0	0	0	19,451	9,9	-168,633	-6829,64	400,95	19,451	-168,633	9,9									
		380C1F3	19451	9651	-168442	0	0	0	19,451	9,651	-168,442	-5390,14	308,832	19,451	-168,442	9,651									
		150C1F1	0	0	0	0	0	0	0	0	0	0	0	0	0	0									
		150C1F2	0	0	0	0	0	0	0	0	0	0	0	0	0	0									
		150C1F3	0	0	0	0	0	0	0	0	0	0	0	0	0	0									
1a		Comp. gl	4618	6249	-50434	0	0	0	4,618	6,249	-50,434	-1235,63	162,5674	4,618	-50,434	6,249	1a		-25500,1	3241,123	57,994	-635,209	79,837		
Wind, 10		GW / opg	2227	4162	-28849	0	0	0	2,227	4,162	-28,849	-1656,8	240,7162	2,227	-28,849	4,162	Wind angle:	90 dgr							
Permaner		380C1F1	17050	24622	-190595	0	0	0	17,05	24,622	-190,595	-9339,16	1206,478	17,05	-190,595	24,622									
Wind ang		380C1F2	17050	23251	-185638	0	0	0	17,05	23,251	-185,638	-7518,34	941,6655	17,05	-185,638	23,251									
		380C1F3	17049	21553	-179693	0	0	0	17,049	21,553	-179,693	-5750,18	689,696	17,049	-179,693	21,553									
		150C1F1	0	0	0	0	0	0	0	0	0	0	0	0	0	0									
		150C1F2	0	0	0	0	0	0	0	0	0	0	0	0	0	0									
		150C1F3	0	0	0	0	0	0	0	0	0	0	0	0	0	0									
1b		Comp. gl	4615	3264	-46248	0	0	0	4,615	3,264	-46,248	-1133,08	89,42875	4,615	-46,248	3,264	1b		-23628,2	1693,561	57,948	-591,669	41,853		
Wind, -20		GW / opg	2225	1906	-23220	0	0	0	2,225	1,906	-23,22	-1333,52	111,1526	2,225	-23,22	1,906	Wind angle:	90 dgr							
Permaner		380C1F1	17036	12643	-174784	0	0	0	17,036	12,643	-174,784	-8564,42	619,507	17,036	-174,784	12,643									
Wind ang		380C1F2	17036	12258	-174101	0	0	0	17,036	12,258	-174,101	-7051,09	496,449	17,036	-174,101	12,258									
		380C1F3	17036	11782	-173316	0	0	0	17,036	11,782	-173,316	-5546,11	377,024	17,036	-173,316	11,782									
		150C1F1	0	0	0	0	0	0	0	0	0	0	0	0	0	0									
		150C1F2	0	0	0	0	0	0	0	0	0	0	0	0	0	0									
		150C1F3	0	0	0	0	0	0	0	0	0	0	0	0	0	0									
3		Comp. gl	7764	9752	-77198	0	0	0	7,764	9,752	-77,198	-1891,35	254,8402	7,764	-77,198	9,752	3		-29052,8	3297,148	70,979	-727,934	81,545		
Wind+ice,		GW / opg	3798	6497	-43749	0	0	0	3,798	6,497	-43,749	-2512,51	376,0092	3,798	-43,749	6,497	Wind angle:	90 dgr							
Permaner		380C1F1	19806	23003	-206105	0	0	0	19,806	23,003	-206,105	-10099,1	1327,147	19,806	-206,105	23,003									
Wind ang		380C1F2	19806	21856	-202544	0	0	0	19,806	21,856	-202,544	-8203,03	885,168	19,806	-202,544	21,856									
		380C1F3	19805	20437	-198338	0	0	0	19,805	20,437	-198,338	-6346,82	653,984	19,805	-198,338	20,437									
		150C1F1	0	0	0	0	0	0	0	0	0	0	0	0	0	0									
		150C1F2	0	0	0	0	0	0	0	0	0	0	0	0	0	0									
		150C1F3	0	0	0	0	0	0	0	0	0	0	0	0	0	0									
4		Comp. gl	5821	3433	-50119	0	0	0	5,821	3,433	-50,119	-1227,92	96,04155	5,821	-50,119	3,433	4		-23457,3	1689,341	67,002	-588,338	41,715		
Construct		GW / opg	2828	1979	-24882	0	0	0	2,828	1,979	-24,882	-1428,97	115,8033	2,828	-24,882	1,979	Wind angle:	90 dgr							
Permaner		380C1F1	19451	12511	-171700	0	0	0	19,451	12,511	-171,7	-8413,3	613,039	19,451	-171,7	12,511									
Wind ang		380C1F2	19451	12131	-171140	0	0	0	19,451	12,131	-171,14	-6931,17	491,3055	19,451	-171,14	12,131									
		380C1F3	19451	11661	-170497	0	0	0	19,451	11,661	-170,497	-5455,9	373,152	19,451	-170,497	11,661									
		150C1F1	0	0	0	0	0	0	0	0	0	0	0	0	0	0									
		150C1F2	0	0	0	0	0	0	0	0	0	0	0	0	0	0									
		150C1F3	0	0	0	0	0	0	0	0	0	0	0	0	0	0									
1a		Comp. gl	4618	3710	-42599	0	0	0	4,618	3,71	-42,599	-1043,68	100,3619	4,618	-42,599	3,71	1a		-21372,1	1912,012	57,982	-534,758	47,17		
Wind, 10		GW / opg	2226	2283	-21897	0	0	0	2,226	2,283	-21,897	-1257,54	132,8045	2,226	-21,897	2,283	Wind angle:	-45 dgr							
Permaner		380C1F1	17046	14360	-158203	0	0	0	17,046	14,36	-158,203	-7751,95	703,64	17,046	-158,203	14,36									
Wind ang		380C1F2	17046	13772	-156827	0	0	0	17,046	13,772	-156,827	-6351,49	557,766	17,046	-156,827	13,772									
		380C1F3	17046	13045	-155232	0	0	0	17,046	13,045	-155,232	-4967,42	417,44	17,046	-155,232	13,045									
		150C1F1	0	0	0	0	0	0	0	0	0	0	0	0	0	0									
		150C1F2	0	0	0	0	0	0	0	0	0	0	0	0	0	0									
		150C1F3	0	0	0	0	0	0	0	0	0	0	0	0	0	0									
1b		Comp. gl	4615	2548	-45313	0	0	0	4,615	2,548	-45,313	-1110,17	71,88675	4,615	-45,313	2,548	1b		-23122	1318,288	57,948	-579,457	32,626		
Wind, -20		GW / opg	2225	1379	-22232	0	0	0	2,225	1,379	-22,232	-1276,78	80,88697	2,225	-22,232	1,379	Wind angle:	-45 dgr							
Permaner		380C1F1	17036	9748	-170789	0	0	0	17,036	9,748	-170,789	-8368,66	477,652	17,036	-170,789	9,748									
Wind ang		380C1F2	17036	9580	-170644	0	0	0	17,036	9,58	-170,644	-6911,08	387,99	17,036	-170,644	9,58									
		380C1F3	17036	9371	-170479	0	0	0	17,036	9,371	-170,479	-5455,33	299,872	17,036	-170,479	9,371									
		150C1F1	0	0	0	0	0	0	0	0	0	0	0	0	0	0									
		150C1F2	0	0	0	0	0	0	0	0	0	0	0	0	0	0									
		150C1F3	0	0	0	0	0	0	0	0	0	0	0	0	0	0									
3		Comp. gl	7762	5837	-66862	0	0	0	7,762	5,837	-66,862	-1638,12	158,9186	7,762	-66,862	5,837	3		-25855,6	2066,593	70,967	-649,989	51,131		
Wind+ice,		GW / opg	3796	3604	-34528	0	0	0	3,796	3,604	-34,528	-1982,94	209,8627	3,796	-34,528	3,604	Wind angle:	-45 dgr							
Permaner		380C1F1	19803	14428	-183802	0	0	0	19,803	14,428	-183,802	-9006,3	706,972	19,803	-183,802	14,428									
Wind ang		380C1F2	19803	13936	-182911	0	0	0	19,803	13,936	-182,911	-7407,9	564,408	19,803	-182,911	13,936									
0		380C1F3	19803	13326	-181886	0	0	0	19,803	13,326	-181,886	-5820,35	426,432	19,803	-181,886	13,326									
		150C1F1	0	0	0	0	0	0	0	0	0	0	0	0	0	0									
		150C1F2	0	0	0	0	0	0	0	0	0	0	0	0	0	0									
		150C1F3	0	0	0	0	0	0	0	0	0	0	0	0	0	0									
4		Comp. gl	5821	2728	-49448	0	0	0	5,821	2,728	-49,448	-1211,48	78,76905	5,821	-49,448	2,728	4		-23052,3	1318,343	67,002	-578,57	32,591		
Construct		GW / opg	2828	1464	-24172	0	0	0	2,828	1,464	-24,172	-1388,2	86,2268	2,828	-24,172	1,464	Wind angle:	-45 dgr							
Permaner		380C1F1	19451	9647	-168439	0	0	0	19,451	9,647	-168,439	-8253,51	472,703	19,451	-168,439	9,647									
Wind ang		380C1F2	19451	9480	-168322	0	0	0	19,451	9,48	-168,322	-6817,04	383,94	19,451	-168,322	9,48									
		380C1F3	19451	9272	-168189	0	0	0	19,451	9,272	-168,189	-5382,05	296,704	19,451	-168,189	9,272									
		150C1F1	0	0	0	0	0	0	0	0	0	0	0	0	0	0									
		150C1F2	0	0	0	0	0	0	0	0	0	0	0	0	0	0									
		150C1F3	0	0	0	0	0	0	0	0	0	0	0	0	0	0									
1a		Comp. gl	3462	1387	-31599	0	0	0	3,462	1,387	-31,599	-774,176	41,0786	3,462	-31,599	1,387	1a		-15846,6	704,2436	43,474	-397,393	17,449		
Wind, 10		GW / opg	1669	670	-15226	0	0	0	1,669	0,67	-15,226	-874,429	39,74654	1,669	-15,226	0,67	Wind angle:	0 dgr							
Permaner		380C1F1	12781	5133	-116856	0	0	0	12,781	5,133	-116,856	-5725,94	251,517	12,781	-116,856	5,133									
Wind ang		380C1F2	12781	5131	-116856	0	0	0	12,781	5,131	-116,856	-4732,67	207,8055	12,781	-116,856	5,131									
		380C1F3	12781	5128	-116856	0	0	0	12,781	5,128	-116,856	-3739,39	164,096	12,781	-116,856	5,128									
		150C1F1	0	0	0	0	0	0	0	0	0	0	0	0	0	0									
		150C1F2	0	0	0	0	0	0	0	0	0	0	0	0	0	0									
		150C1F3	0	0	0	0	0	0	0	0	0	0	0	0	0	0									
1b		Comp. gl	3461	1577	-36072	0	0	0	3,461	1,577	-36,072	-883,764	45,73155	3,461	-36,072	1,577	1b		-18567,8	820,3014	43,451	-465,367	20,349		
Wind, -20		GW / opg	1668	769	-17575	0	0	0	1,668	0,769	-17,575	-1009,33	45,43135	1,668	-17,575	0,769	Wind angle:	0 dgr							
Permaner		380C1F1	12774	6002	-137240	0	0	0	12,774	6,002	-137,24	-6724,76	294,098	12,774	-137,24	6,002									
Wind ang		380C1F2	12774	6001	-137240	0	0	0	12,774	6,001	-137,24	-5558,22	243,0405	12,774	-137,24	6,001									
		380C1F3	12774	6000	-137240	0	0	0	12,774	6	-137,24	-4391,68	192	12,774	-137,24	6									
		150C1F1	0	0	0	0	0	0	0	0	0	0	0	0	0	0									
		150C1F2	0	0	0	0	0	0	0	0	0	0	0	0	0	0									
		150C1F3	0	0	0	0	0	0	0	0	0	0	0	0	0	0									

3	Comp. gl	6606	2468	-56251	0	0	0	6,606	2,468	-56,251	-1378,15	74,0083	6,606	-56,251	2,468	3	-20825,6	929,0411	56,458	-524,874	23,01
Wind+ice,	GW / opg	3238	1216	-27659	0	0	0	3,238	1,216	-27,659	-1588,46	72,29576	3,238	-27,659	1,216	Wind angle: 0 dgr					
Permanen	380C1F1	15538	6444	-146988	0	0	0	15,538	6,444	-146,988	-7202,41	315,756	15,538	-146,988	6,444						
Wind ang	380C1F2	15538	6442	-146988	0	0	0	15,538	6,442	-146,988	-5953,01	260,901	15,538	-146,988	6,442						
	380C1F3	15538	6440	-146988	0	0	0	15,538	6,44	-146,988	-4703,62	206,08	15,538	-146,988	6,44						
	150C1F1	0	0	0	0	0	0	0	0	0	0	0	0	0	0						
	150C1F2	0	0	0	0	0	0	0	0	0	0	0	0	0	0						
	150C1F3	0	0	0	0	0	0	0	0	0	0	0	0	0	0						
4	Comp. gl	4665	1803	-41233	0	0	0	4,665	1,803	-41,233	-1010,21	53,73675	4,665	-41,233	1,803	4	-18891,4	837,3907	52,494	-474,349	20,742
Constructi	GW / opg	2271	879	-20083	0	0	0	2,271	0,879	-20,083	-1153,37	52,20693	2,271	-20,083	0,879	Wind angle: 0 dgr					
Permanen	380C1F1	15186	6021	-137677	0	0	0	15,186	6,021	-137,677	-6746,17	295,029	15,186	-137,677	6,021						
Wind ang	380C1F2	15186	6020	-137678	0	0	0	15,186	6,02	-137,678	-5575,96	243,81	15,186	-137,678	6,02						
	380C1F3	15186	6019	-137678	0	0	0	15,186	6,019	-137,678	-4405,7	192,608	15,186	-137,678	6,019						
	150C1F1	0	0	0	0	0	0	0	0	0	0	0	0	0	0						
	150C1F2	0	0	0	0	0	0	0	0	0	0	0	0	0	0						
	150C1F3	0	0	0	0	0	0	0	0	0	0	0	0	0	0						
6	Comp. gl	3462	1380	-31600	0	0	0	3,462	1,38	-31,6	-774,2	40,9071	3,462	-31,6	1,38	6	-15846,8	700,2595	43,474	-397,397	17,351
Permanen	GW / opg	1669	665	-15226	0	0	0	1,669	0,665	-15,226	-874,429	39,45939	1,669	-15,226	0,665	0					
Permanen	380C1F1	12781	5102	-116857	0	0	0	12,781	5,102	-116,857	-5725,99	249,998	12,781	-116,857	5,102						
	380C1F2	12781	5102	-116857	0	0	0	12,781	5,102	-116,857	-4732,71	206,631	12,781	-116,857	5,102						
	380C1F3	12781	5102	-116857	0	0	0	12,781	5,102	-116,857	-3739,42	163,264	12,781	-116,857	5,102						
	150C1F1	0	0	0	0	0	0	0	0	0	0	0	0	0	0						
	150C1F2	0	0	0	0	0	0	0	0	0	0	0	0	0	0						
	150C1F3	0	0	0	0	0	0	0	0	0	0	0	0	0	0						
1a	Comp. gl	3463	3790	-36327	0	0	0	3,463	3,79	-36,327	-890,012	99,95415	3,463	-36,327	3,79	1a	-18384,2	1963,188	43,48	-458,86	48,401
Wind, 10	GW / opg	1670	2446	-19823	0	0	0	1,67	2,446	-19,823	-1138,43	141,743	1,67	-19,823	2,446	Wind angle: 45 dgr					
Permanen	380C1F1	12783	14850	-136867	0	0	0	12,783	14,85	-136,867	-6706,48	727,65	12,783	-136,867	14,85						
Wind ang	380C1F2	12782	14113	-134385	0	0	0	12,782	14,113	-134,385	-5442,59	571,5765	12,782	-134,385	14,113						
	380C1F3	12782	13202	-131458	0	0	0	12,782	13,202	-131,458	-4206,66	422,464	12,782	-131,458	13,202						
	150C1F1	0	0	0	0	0	0	0	0	0	0	0	0	0	0						
	150C1F2	0	0	0	0	0	0	0	0	0	0	0	0	0	0						
	150C1F3	0	0	0	0	0	0	0	0	0	0	0	0	0	0						
1b	Comp. gl	3461	2275	-36576	0	0	0	3,461	2,275	-36,576	-896,112	62,83255	3,461	-36,576	2,275	1b	-18843,2	1185,415	43,451	-472,003	29,331
Wind, -20	GW / opg	1668	1277	-18122	0	0	0	1,668	1,277	-18,122	-1040,75	74,60579	1,668	-18,122	1,277	Wind angle: 45 dgr					
Permanen	380C1F1	12774	8816	-139418	0	0	0	12,774	8,816	-139,418	-6831,48	431,984	12,774	-139,418	8,816						
Wind ang	380C1F2	12774	8609	-139116	0	0	0	12,774	8,609	-139,116	-5634,2	348,6645	12,774	-139,116	8,609						
	380C1F3	12774	8354	-138771	0	0	0	12,774	8,354	-138,771	-4440,67	267,328	12,774	-138,771	8,354						
	150C1F1	0	0	0	0	0	0	0	0	0	0	0	0	0	0						
	150C1F2	0	0	0	0	0	0	0	0	0	0	0	0	0	0						
	150C1F3	0	0	0	0	0	0	0	0	0	0	0	0	0	0						
3	Comp. gl	6607	6166	-61652	0	0	0	6,607	6,166	-61,652	-1510,47	164,6114	6,607	-61,652	6,166	3	-22601,9	2097,038	56,465	-567,899	51,887
Wind+ice,	GW / opg	3239	3937	-32993	0	0	0	3,239	3,937	-32,993	-1894,79	228,5636	3,239	-32,993	3,937	Wind angle: 45 dgr					
Permanen	380C1F1	15540	14587	-159465	0	0	0	15,54	14,587	-159,465	-7813,79	714,763	15,54	-159,465	14,587						
Wind ang	380C1F2	15540	13976	-157840	0	0	0	15,54	13,976	-157,84	-6392,52	566,028	15,54	-157,84	13,976						
	380C1F3	15539	13221	-155949	0	0	0	15,539	13,221	-155,949	-4990,37	423,072	15,539	-155,949	13,221						
	150C1F1	0	0	0	0	0	0	0	0	0	0	0	0	0	0						
	150C1F2	0	0	0	0	0	0	0	0	0	0	0	0	0	0						
	150C1F3	0	0	0	0	0	0	0	0	0	0	0	0	0	0						
4	Comp. gl	4665	2492	-41555	0	0	0	4,665	2,492	-41,555	-1018,1	70,61725	4,665	-41,555	2,492	4	-19094,5	1199,48	52,494	-479,24	29,651
Constructi	GW / opg	2271	1378	-20433	0	0	0	2,271	1,378	-20,433	-1173,47	80,8645	2,271	-20,433	1,378	Wind angle: 45 dgr					
Permanen	380C1F1	15186	8813	-139326	0	0	0	15,186	8,813	-139,326	-6826,97	431,837	15,186	-139,326	8,813						
Wind ang	380C1F2	15186	8610	-139095	0	0	0	15,186	8,61	-139,095	-5633,35	348,705	15,186	-139,095	8,61						
	380C1F3	15186	8358	-138831	0	0	0	15,186	8,358	-138,831	-4442,59	267,456	15,186	-138,831	8,358						
	150C1F1	0	0	0	0	0	0	0	0	0	0	0	0	0	0						
	150C1F2	0	0	0	0	0	0	0	0	0	0	0	0	0	0						
	150C1F3	0	0	0	0	0	0	0	0	0	0	0	0	0	0						
1a	Comp. gl	3463	6009	-44934	0	0	0	3,463	6,009	-44,934	-1100,88	154,3197	3,463	-44,934	6,009	1a	-22875,5	3123,515	43,489	-568,596	76,923
Wind, 10	GW / opg	1670	4076	-26872	0	0	0	1,67	4,076	-26,872	-1543,26	235,3539	1,67	-26,872	4,076	Wind angle: 90 dgr					
Permanen	380C1F1	12786	23805	-171934	0	0	0	12,786	23,805	-171,934	-8424,77	1166,445	12,786	-171,934	23,805						
Wind ang	380C1F2	12785	22393	-166026	0	0	0	12,785	22,393	-166,026	-6724,05	906,9165	12,785	-166,026	22,393						
	380C1F3	12785	20640	-158830	0	0	0	12,785	20,64	-158,83	-5082,56	660,48	12,785	-158,83	20,64						
	150C1F1	0	0	0	0	0	0	0	0	0	0	0	0	0	0						
	150C1F2	0	0	0	0	0	0	0	0	0	0	0	0	0	0						
	150C1F3	0	0	0	0	0	0	0	0	0	0	0	0	0	0						
1b	Comp. gl	3461	2893	-37768	0	0	0	3,461	2,893	-37,768	-925,316	77,97355	3,461	-37,768	2,893	1b	-19488,6	1509,883	43,453	-487,595	37,305
Wind, -20	GW / opg	1669	1737	-19345	0	0	0	1,669	1,737	-19,345	-1110,98	101,0244	1,669	-19,345	1,737	Wind angle: 90 dgr					
Permanen	380C1F1	12775	11320	-144512	0	0	0	12,775	11,32	-144,512	-7081,09	554,68	12,775	-144,512	11,32						
Wind ang	380C1F2	12774	10923	-143544	0	0	0	12,774	10,923	-143,544	-5813,53	442,3815	12,774	-143,544	10,923						
	380C1F3	12774	10432	-142426	0	0	0	12,774	10,432	-142,426	-4557,63	333,824	12,774	-142,426	10,432						
	150C1F1	0	0	0	0	0	0	0	0	0	0	0	0	0	0						
	150C1F2	0	0	0	0	0	0	0	0	0	0	0	0	0	0						
	150C1F3	0	0	0	0	0	0	0	0	0	0	0	0	0	0						
3	Comp. gl	6608	9529	-72110	0	0	0	6,608	9,529	-72,11	-1766,7	247,0069	6,608	-72,11	9,529	3	-26062,2	3163,491	56,475	-652,493	78,244
Wind+ice,	GW / opg	3241	6414	-41862	0	0	0	3,241	6,414	-41,862	-2404,13	370,8192	3,241	-41,862	6,414	Wind angle: 90 dgr					
Permanen	380C1F1	15543	22042	-184145	0	0	0	15,543	22,042	-184,145	-9023,11	1080,058	15,543	-184,145	22,042						
Wind ang	380C1F2	15542	20861	-179791	0	0	0	15,542	20,861	-179,791	-7281,54	844,8705	15,542	-179,791	20,861						
	380C1F3	15541	19398	-174585	0	0	0	15,541	19,398	-174,585	-5586,72	620,736	15,541	-174,585	19,398						
	150C1F1	0	0	0	0	0	0	0	0	0	0	0	0	0	0						
	150C1F2	0	0	0	0	0	0	0	0	0	0	0	0	0	0						
	150C1F3	0	0	0	0	0	0	0	0	0	0	0	0	0	0						
4	Comp. gl	4665	3094	-42346	0	0	0	4,665	3,094	-42,346	-1037,48	85,36625	4,665	-42,346	3,094	4	-19583,9	1517,366	52,497	-491,054	37,466
Constructi	GW / opg	2271	1821	-21255	0	0	0	2,271	1,821	-21,255	-1220,67	106,306	2,271	-21,255	1,821	Wind angle: 90 dgr					
Permanen	380C1F1	15187	11269	-143280	0	0	0	15,187	11,269	-143,28	-7020,72	552,181	15,187	-143,28	11,269						
Wind ang	380C1F2	15187	10881	-142523	0	0	0	15,187	10,881	-142,523	-5772,18	440,6805	15,187	-142,523	10,881						
	380C1F3	15187	10401	-141650	0	0	0	15,187	10,401	-141,65	-4532,8	332,832	15,187	-141,65	10,401						
	150C1F1	0	0	0	0	0	0	0	0	0	0	0	0	0	0						
	150C1F2	0	0	0	0	0	0	0	0	0	0	0	0	0	0						
	150C1F3	0	0	0	0	0	0	0	0	0	0	0	0	0	0						
1a	Comp. gl	3463	3379	-35022	0	0	0	3,463	3,379	-35,022	-858,039	89,88465	3,463	-35,022	3,379	1a	-17691	1748,3	43,478	-442,015	43,116
Wind, 10	GW / opg	1669	2140	-18636	0	0	0	1,669	2,14	-18,636	-1070,27	124,1686	1,669	-18,636	2,14	Wind angle: -45 dgr					
Permanen	380C1F1	12782	13189	-131415	0	0	0	12,782	13,189	-131,415	-6439,34	646,261	12,782	-131,415	13,189						
Wind ang	380C1F2	12782	12580	-129558	0	0	0	12,782	12,58	-129,558	-5247,1	509,49	12,782	-129,558	12,58						
	380C1F3	12782	11828	-127384	0	0	0	12,782	11,828	-127,384	-4076,29	378,496	12,782	-127,384	11,828						
	150C1F1	0	0	0	0	0	0	0	0	0	0	0	0	0	0						
	150C1F2	0	0	0	0	0	0	0	0	0	0	0	0	0	0						
	150C1F3	0	0	0	0	0	0	0	0	0	0	0	0	0	0						
1b	Comp. gl	3461	2159	-36425	0	0	0	3,461	2,159	-36,425	-892,413	59,99055	3,461	-36,425	2,159	1b	-18760,8	1124,986	43,451	-470,015	27,845
Wind, -20	GW / opg	1668	1192	-17961	0	0	0	1,668	1,192	-17,961	-1031,5	69,72424	1,668	-17,961	1,192	Wind angle: -45 dgr					
Permanen	380C1F1	12774	8350	-138766	0	0	0	12,774	8,35	-138,766	-6799,53	409,15	12,774	-138,766	8,35						
Wind ang	380C1F2	12774	8178	-138553	0	0	0	12,774	8,178	-138,553	-5611,4	331,209	12,774	-138,553	8,178						
	380C1F3	12774	7966	-138310	0	0	0	12,774	7,966	-138,31	-4425,92	254,912	12,774	-138,31	7,966						
	150C1F1	0	0	0	0	0	0	0	0	0	0	0	0	0	0						
	150C1F2	0	0	0	0	0	0	0	0	0	0	0	0	0	0						
	150C1F3	0	0	0	0	0	0	0	0	0	0	0	0	0	0						
3	Comp. gl	6606	5542	-60127	0	0	0	6,606	5,542	-60,127	-1473,11	149,3213	6,606	-60,127	5,542	3	-22100,6	1899,697	56,462	-555,715	47,011
Wind+ice,	GW / opg	3239	3474	-31567	0	0	0	3,239	3,474	-31,567	-1812,89	201,9735	3,239	-31,567	3,474	Wind angle: -45 dgr					
Permanen	380C1F1	15539	13210	-155921	0	0	0	15,539	13,21	-155,921	-7640,13	647,29	15,539	-155,921	13,21						
Wind ang	380C1F2	15539	12705	-154736	0	0	0	15,539	12,705	-154,736	-6266,81	514,5525	15,539	-154,736	12,705						
0	380C1F3	15539	12080	-153364	0	0	0	15,539	12,08	-153,364	-4907,65	386,56	15,539	-153,364	12,08						
	150C1F1	0	0	0	0	0	0	0	0	0	0	0	0	0	0						
	150C1F2	0	0	0	0	0	0	0	0	0	0	0	0	0	0						
	150C1F3	0	0	0	0	0	0	0	0	0	0	0	0	0	0						
4	Comp. gl	4665	2379	-41456	0	0	0	4,665	2,379	-41,456	-1015,67	67,84875	4,665	-41,456	2,379	4	-19032,9	1139,97	52,494	-477,755	28,187
Constructi	GW / opg	2271	1296	-20328	0	0	0	2,271	1,296	-20,328	-1167,44	76,15524	2,271	-20,328	1,296	Wind angle: -45 dgr					
Permanen	380C1F1	15186	8354	-138827	0	0	0	15,186	8,354	-138,827	-6802,52	409,346	15,186	-138,827	8,354						
Wind ang	380C1F2	15186	8184	-138665	0	0	0	15,186	8,184	-138,665	-5615,93	331,452	15,186	-138,665	8,184						
	380C1F3	15186	7974	-138479	0	0	0	15,186	7,974	-138,479	-4431,33	255,168	15,186	-138,479	7,974						
	150C1F1	0	0	0	0	0	0	0	0	0	0	0	0	0	0						
	150C1F2	0	0	0	0	0	0	0	0	0	0	0	0	0	0						
	150C1F3	0	0	0	0	0	0	0	0	0	0	0	0	0	0						
1a	Comp. gl	4617	1761	-40155	0	0	0	4,617	1,761	-40,155	-983,798	52,60935	4,617	-40,155	1,761	1a	-6345,47	1538,655	100,59	-133,425	38,257
Wind, 10	GW / opg	2226	852	-19378	0	0	0	2,226	0,852	-19,378	-1112,88	50,62212	2,226	-19,378	0,852	Wind angle: 0 dgr					
Permanen	380C1F1	17045	6483	-147784	0	0	0	17,045	6,483	-147,784	-7241,42	317,667	17,045	-147,784	6,483						
Wind ang	380C1F2	17045	6481	-147784	17045	6481	147784	34,09	12,962	0	0	524,961	34,09	0	12,962						
	380C1F3	17045	6479	-147784	17045	6479	147784	34,09	12,958	0	0	414,656	34,09	0	12,958						
	150C1F1	0	0	4261	1621	36946		4,261	1,621	36,946	1810,354	102,8645	4,261	36,946	1,621						
	150C1F2	0	0	0	0	0		0	0	0	0	0	0	0	0						
	150C1F3	0	0	4261	1620	36946		4,261	1,62	36,946	1182,272	75,2755	4,261	36,946	1,62						
1b	Comp. gl	4615	1970	-45077	0	0	0	4,615	1,97	-45,077	-1104,39	57,72575	4,615	-45,077	1,97	1b	-7246,97	1751,37	100,538	-151,931	43,745
Wind, -20	GW / opg	2225	961	-21970	0	0	0	2,225	0,961	-21,97	-1261,74	56,88123	2,225	-21,97	0,961	Wind angle: 0 dgr					
Permanen	380C1F1	17036	7422	-169770	0	0	0	17,036	7,422	-169,77	-8318,73	363,678	17,036	-169,77	7,422						
Wind ang	380C1F2	17036	7421	-169770	17036	7421	169770	34,072	14,842	0	0	601,101	34,072	0	14,842						
	380C1F3	17036	7420	-169770	17036	7420	169770	34,072	14,84	0	0	474,88	34,072	0	14,84						
	150C1F1	0	0	0	4259	1855	42443	4,259	1,855	42,443	2079,707	114,3195	4,259	42,443	1,855						
	150C1F2	0	0	0	0	0	0	0	0	0	0	0	0	0	0						
	150C1F3	0	0	0	4259	1855	42443	4,259	1,855	42,443	1358,176	82,7845	4,259	42,443	1,855						
3	Comp. gl	7762	2793	-63692	0	0	0	7,762	2,793	-63,692	-1560,45	84,3406	7,762	-63,692	2,793	3	-8451,6	1883,712	120,47	-183,576	46,859
Wind+ice,	GW / opg	3796	1374	-31270	0	0	0	3,796	1,374	-31,27	-1795,84	81,79378	3,796	-31,27	1,374	Wind angle: 0 dgr					
Permanen	380C1F1	19802	7765	-177228	0	0	0	19,802	7,765	-177,228	-8684,17	380,485	19,802	-177,228	7,765						
Wind ang	380C1F2	19802	7763	-177228	19802	7763	177228	39,604	15,526	0	0	628,803	39,604	0	15,526						
	380C1F3	19802	7760	-177228	19802	7760	177228	39,604	15,52	0	0	496,64	39,604	0	15,52						
	150C1F1	0	0	4951	1941	44307		4,951	1,941	44,307	2171,043	122,3395	4,951	44,307	1,941						
	150C1F2	0	0	0	0	0		0	0	0	0	0	0	0	0						
	150C1F3	0	0	4951	1940	44307		4,951	1,94	44,307	1417,824	89,3105	4,951	44,307	1,94						
4	Comp. gl	5821	2154	-49285	0	0	0	5,821	2,154	-49,285	-1207,48	64,70605	5,821	-49,285	2,154	4	-7404,48	1750,552	115,63	-157,088	43,505
Constructi	GW / opg	2828	1049	-23990	0	0	0	2,828	1,049	-23,99	-1377,75	62,39335	2,828	-23,99	1,049	Wind angle: 0 dgr					
Permanen	380C1F1	19451	7328	-167627	0	0	0	19,451	7,328	-167,627	-8213,72	359,072	19,451	-167,627	7,328						
Wind ang	380C1F2	19451	7328	-167627	19451	7328	167627	38,902	14,656	0	0	593,568	38,902	0	14,656						
	380C1F3	19451	7327	-167627	19451	7327	167627	38,902	14,654	0	0	468,928	38,902	0	14,654						
	150C1F1	0	0	4863	1832	41907		4,863	1,832	41,907	2053,443	116,5145	4,863	41,907	1,832						
	150C1F2	0	0	0	0	0		0	0	0	0	0	0	0	0						
	150C1F3	0	0	4863	1832	41907		4,863	1,832	41,907	1341,024	85,3705	4,863	41,907	1,832						
6	Comp. gl	5195	1931	-44221	0	0	0	5,195	1,931	-44,221	-1083,41	57,95925	5,195	-44,221	1,931	6	-6979,92	1685,583	113,173	-146,795	41,869
Permanen	GW / opg	2505	932	-21353	0	0	0	2,505	0,932	-21,353	-1226,3	55,42856	2,505	-21,353	0,932	0					
Permanen	380C1F1	19177	7092	-162441	0	0	0	19,177	7,092	-162,441	-7959,61	347,508	19,177	-162,441	7,092						
	380C1F2	19177	7092	-162441	19177	7092	162441	38,354	14,184	0	0	574,452	38,354	0	14,184						

	380C1F3	19177	7092	-162441	19177	7092	162441	38,354	14,184	0	0	453,888	38,354	0	14,184						
	150C1F1	0	0	0	4794	1773	40610	4,794	1,773	40,61	1989,89	113,244	4,794	40,61	1,773						
	150C1F2	0	0	0	0	0	0	0	0	0	0	0	0	0	0						
	150C1F3	0	0	0	4794	1773	40610	4,794	1,773	40,61	1299,52	83,103	4,794	40,61	1,773						
1a	Comp. gl	4618	4106	-43575	0	0	0	4,618	4,106	-43,575	-1067,59	110,0639	4,618	-43,575	4,106	1a	-7394,25	3421,877	100,598	-156,964	85,938
Wind, 10 (	GW / opgv	2226	2577	-22837	0	0	0	2,226	2,577	-22,837	-1311,53	149,6889	2,226	-22,837	2,577	Wind angle:	45 dgr				
Permaner	380C1F1	17047	15962	-162308	0	0	0	17,047	15,962	-162,308	-7953,09	782,138	17,047	-162,308	15,962						
Wind angl	380C1F2	17046	15252	-160427	17046	13772	156827	34,092	29,024	-3,6	-145,8	1175,472	34,092	-3,6	29,024						
	380C1F3	17046	14373	-158235	17046	13045	155232	34,092	27,418	-3,003	-96,096	877,376	34,092	-3,003	27,418						
	150C1F1	0	0	0	4262	3590	39551	4,262	3,59	39,551	1937,999	199,351	4,262	39,551	3,59						
	150C1F2	0	0	0	0	0	0	0	0	0	0	0	0	0	0						
	150C1F3	0	0	0	4261	3261	38808	4,261	3,261	38,808	1241,856	127,7875	4,261	38,808	3,261						
1b	Comp. gl	4615	2661	-45417	0	0	0	4,615	2,661	-45,417	-1112,72	74,65525	4,615	-45,417	2,661	1b	-7355,88	2306,639	100,538	-154,373	57,814
Wind, -20	GW / opgv	2225	1462	-22344	0	0	0	2,225	1,462	-22,344	-1283,22	85,65366	2,225	-22,344	1,462	Wind angle:	45 dgr				
Permaner	380C1F1	17036	10205	-171233	0	0	0	17,036	10,205	-171,233	-8390,42	500,045	17,036	-171,233	10,205						
Wind angl	380C1F2	17036	10003	-171027	17036	9580	170644	34,072	19,583	-0,383	-15,5115	793,1115	34,072	-0,383	19,583						
	380C1F3	17036	9752	-170792	17036	9371	170479	34,072	19,123	-0,313	-10,016	611,936	34,072	-0,313	19,123						
	150C1F1	0	0	0	4259	2437	42697	4,259	2,437	42,697	2092,153	142,8375	4,259	42,697	2,437						
	150C1F2	0	0	0	0	0	0	0	0	0	0	0	0	0	0						
	150C1F3	0	0	0	4259	2343	42620	4,259	2,343	42,62	1363,84	98,4005	4,259	42,62	2,343						
3	Comp. gl	7762	6450	-68138	0	0	0	7,762	6,45	-68,138	-1669,38	173,9371	7,762	-68,138	6,45	3	-9311,23	3587,768	120,476	-203,244	90,09
Wind+ice,	GW / opgv	3796	4058	-35760	0	0	0	3,796	4,058	-35,76	-2053,7	235,9359	3,796	-35,76	4,058	Wind angle:	45 dgr				
Permaner	380C1F1	19804	15768	-186490	0	0	0	19,804	15,768	-186,49	-9138,01	772,632	19,804	-186,49	15,768						
Wind angl	380C1F2	19803	15174	-185252	19803	13936	182911	39,606	29,11	-2,341	-94,8105	1178,955	39,606	-2,341	29,11						
	380C1F3	19803	14439	-183822	19803	13326	181886	39,606	27,765	-1,936	-61,952	888,48	39,606	-1,936	27,765						
	150C1F1	0	0	0	4951	3607	45950	4,951	3,607	45,95	2251,55	203,9735	4,951	45,95	3,607						
	150C1F2	0	0	0	0	0	0	0	0	0	0	0	0	0	0						
	150C1F3	0	0	0	4951	3332	45471	4,951	3,332	45,471	1455,072	133,8545	4,951	45,471	3,332						
4	Comp. gl	5821	2840	-49522	0	0	0	5,821	2,84	-49,522	-1213,29	81,51305	5,821	-49,522	2,84	4	-7489,02	2303,624	115,63	-158,98	57,519
Constructi	GW / opgv	2828	1545	-24251	0	0	0	2,828	1,545	-24,251	-1392,73	90,87863	2,828	-24,251	1,545	Wind angle:	45 dgr				
Permaner	380C1F1	19451	10101	-168800	0	0	0	19,451	10,101	-168,8	-8271,2	494,949	19,451	-168,8	10,101						
Wind angl	380C1F2	19451	9900	-168633	19451	9480	168322	38,902	19,38	-0,311	-12,5955	784,89	38,902	-0,311	19,38						
	380C1F3	19451	9651	-168442	19451	9272	168189	38,902	18,923	-0,253	-8,096	605,536	38,902	-0,253	18,923						
	150C1F1	0	0	0	4863	2412	42110	4,863	2,412	42,11	2063,39	144,9345	4,863	42,11	2,412						
	150C1F2	0	0	0	0	0	0	0	0	0	0	0	0	0	0						
	150C1F3	0	0	0	4863	2318	42047	4,863	2,318	42,047	1345,504	100,9225	4,863	42,047	2,318						
1a	Comp. gl	4618	6249	-50434	0	0	0	4,618	6,249	-50,434	-1235,63	162,5674	4,618	-50,434	6,249	1a	-8459,25	5393,432	100,618	-177,306	136,185
Wind, 10 (	GW / opgv	2227	4162	-28849	0	0	0	2,227	4,162	-28,849	-1656,8	240,7162	2,227	-28,849	4,162	Wind angle:	90 dgr				
Permaner	380C1F1	17050	24622	-190595	0	0	0	17,05	24,622	-190,595	-9339,16	1206,478	17,05	-190,595	24,622						
Wind angl	380C1F2	17050	23251	-185638	17050	23251	185638	34,1	46,502	0	0	1883,331	34,1	0	46,502						
	380C1F3	17049	21553	-179693	17049	21553	179693	34,098	43,106	0	0	1379,392	34,098	0	43,106						
	150C1F1	0	0	0	4263	6156	47649	4,263	6,156	47,649	2334,801	325,0905	4,263	47,649	6,156						
	150C1F2	0	0	0	0	0	0	0	0	0	0	0	0	0	0						
	150C1F3	0	0	0	4262	5388	44923	4,262	5,388	44,923	1437,536	195,857	4,262	44,923	5,388						
1b	Comp. gl	4615	3264	-46248	0	0	0	4,615	3,264	-46,248	-1133,08	89,42875	4,615	-46,248	3,264	1b	-7503,38	2863,012	100,538	-157,227	71,999
Wind, -20	GW / opgv	2225	1906	-23220	0	0	0	2,225	1,906	-23,22	-1333,52	111,1526	2,225	-23,22	1,906	Wind angle:	90 dgr				
Permaner	380C1F1	17036	12643	-174784	0	0	0	17,036	12,643	-174,784	-8564,42	619,507	17,036	-174,784	12,643						
Wind angl	380C1F2	17036	12258	-174101	17036	12258	174101	34,072	24,516	0	0	992,898	34,072	0	24,516						
	380C1F3	17036	11782	-173316	17036	11782	173316	34,072	23,564	0	0	754,048	34,072	0	23,564						
	150C1F1	0	0	0	4259	3161	43696	4,259	3,161	43,696	2141,104	178,3135	4,259	43,696	3,161						
	150C1F2	0	0	0	0	0	0	0	0	0	0	0	0	0	0						
	150C1F3	0	0	0	4259	2945	43329	4,259	2,945	43,329	1386,528	117,6645	4,259	43,329	2,945						
3	Comp. gl	7764	9752	-77198	0	0	0	7,764	9,752	-77,198	-1891,35	254,8402	7,764	-77,198	9,752	3	-10391,5	5336,054	120,493	-225,941	134,698
Wind+ice,	GW / opgv	3798	6497	-43749	0	0	0	3,798	6,497	-43,749	-2512,51	376,0092	3,798	-43,749	6,497	Wind angle:	90 dgr				
Permaner	380C1F1	19806	23003	-206105	0	0	0	19,806	23,003	-206,105	-10099,1	1127,147	19,806	-206,105	23,003						
Wind angl	380C1F2	19806	21856	-202544	19806	21856	202544	39,612	43,712	0	0	1770,336	39,612	0	43,712						
	380C1F3	19805	20437	-198338	19805	20437	198338	39,61	40,874	0	0	1307,968	39,61	0	40,874						
	150C1F1	0	0	0	4952	5751	51526	4,952	5,751	51,526	2524,774	309,035	4,952	51,526	5,751						
	150C1F2	0	0	0	0	0	0	0	0	0	0	0	0	0	0						
	150C1F3	0	0	0	4951	5109	49585	4,951	5,109	49,585	1586,72	190,7185	4,951	49,585	5,109						
4	Comp. gl	5821	3433	-50119	0	0	0	5,821	3,433	-50,119	-1227,92	96,04155	5,821	-50,119	3,433	4	-7602,9	2853,844	115,63	-161,152	71,55
Constructi	GW / opgv	2828	1979	-24882	0	0	0	2,828	1,979	-24,882	-1428,97	115,8033	2,828	-24,882	1,979	Wind angle:	90 dgr				
Permaner	380C1F1	19451	12511	-171700	0	0	0	19,451	12,511	-171,7	-8413,3	613,039	19,451	-171,7	12,511						
Wind angl	380C1F2	19451	12131	-171140	19451	12131	171140	38,902	24,262	0	0	982,611	38,902	0	24,262						
	380C1F3	19451	11661	-170497	19451	11661	170497	38,902	23,322	0	0	746,304	38,902	0	23,322						
	150C1F1	0	0	0	4863	3128	42925	4,863	3,128	42,925	2103,325	180,0185	4,863	42,925	3,128						
	150C1F2	0	0	0	0	0	0	0	0	0	0	0	0	0	0						
	150C1F3	0	0	0	4863	2915	42624	4,863	2,915	42,624	1363,968	120,0265	4,863	42,624	2,915						
1a	Comp. gl	4618	3710	-42599	0	0	0	4,618	3,71	-42,599	-1043,68	100,3619	4,618	-42,599	3,71	1a	-6557,11	3347,071	100,598	-135,96	84,379
Wind, 10 (	GW / opgv	2226	2283	-21897	0	0	0	2,226	2,283	-21,897	-1257,54	132,8045	2,226	-21,897	2,283	Wind angle:	-45 dgr				
Permaner	380C1F1	17046	14360	-158203	0	0	0	17,046	14,36	-158,203	-7751,95	703,64	17,046	-158,203	14,36						
Wind angl	380C1F2	17046	13772	-156827	17046	15252	160427	34,092	29,024	3,6	145,8	1175,472	34,092	3,6	29,024						
	380C1F3	17046	13045	-155232	17046	14373	158235	34,092	27,418	3,003	96,096	877,376	34,092	3,003	27,418						
	150C1F1	0	0	0	4262	3991	40577	4,262	3,991	40,577	1988,273	219	4,262	40,577	3,991						
	150C1F2	0	0	0	0	0	0	0	0	0	0	0	0	0	0						
	150C1F3	0	0	0	4262	3593	39559	4,262	3,593	39,559	1265,888	138,417	4,262	39,559	3,593						
1b	Comp. gl	4615	2548	-45313	0	0	0	4,615	2,548	-45,313	-1110,17	71,88675	4,615	-45,313	2,548	1b	-7266,16	2285,337	100,538	-152,132	57,37
Wind, -20	GW / opgv	2225	1379	-22232	0	0	0	2,225	1,379	-22,232	-1276,78	80,88697	2,225	-22,232	1,379	Wind angle:	-45 dgr				
Permaner	380C1F1	17036	9748	-170789	0	0	0	17,036	9,748	-170,789	-8368,66	477,652	17,036	-170,789	9,748						
Wind angl	380C1F2	17036	9580	-170644	17036	10003	171027	34,072	19,583	0,383	15,5115	793,1115	34,072	0,383	19,583						
	380C1F3	17036	9371	-170479	17036	9752	170792	34,072	19,123	0,313	10,016	611,936	34,072	0,313	19,123						
	150C1F1	0	0	0	4259	2551	42808	4,259	2,551	42,808	2097,592	148,4235	4,259	42,808	2,551						
	150C1F2	0	0	0	0	0	0	0	0	0	0	0	0	0	0						
	150C1F3	0	0	0	4259	2438	42698	4,259	2,438	42,698	1366,336	101,4405	4,259	42,698	2,438						
3	Comp. gl	7762	5837	-66862	0	0	0	7,762	5,837	-66,862	-1638,12	158,9186	7,762	-66,862	5,837	3	-8715,53	3506,327	120,475	-188,337	88,296
Wind+ice,	GW / opgv	3796	3604	-34528	0	0	0	3,796	3,604	-34,528	-1982,94	209,8627	3,796	-34,528	3,604	Wind angle:	-45 dgr				
Permaner	380C1F1	19803	14428	-183802	0	0	0	19,803	14,428	-183,802	-9006,3	706,972	19,803	-183,802	14,428						
Wind angl	380C1F2	19803	13936	-182911	19803	15174	185252	39,606	29,11	2,341	94,8105	1178,955	39,606	2,341	29,11						
0	380C1F3	19803	13326	-181886	19803	14439	183822	39,606	27,765	1,936	61,952	888,48	39,606	1,936	27,765						
	150C1F1	0	0	0	4951	3942	46622	4,951	3,942	46,622	2284,478	220,3885	4,951	46,622	3,942						
	150C1F2	0	0	0	0	0	0	0	0	0	0	0	0	0	0						
	150C1F3	0	0	0	4951	3610	45956	4,951	3,61	45,956	1470,592	142,7505	4,951	45,956	3,61						
4	Comp. gl	5821	2728	-49448	0	0	0	5,821	2,728	-49,448	-1211,48	78,76905	5,821	-49,448	2,728	4	-7417,14	2282,559	115,63	-157,184	57,08
Constructi	GW / opgv	2828	1464	-24172	0	0	0	2,828	1,464	-24,172	-1388,2	86,2268	2,828	-24,172	1,464	Wind angle:	-45 dgr				
Permaner	380C1F1	19451	9647	-168439	0	0	0	19,451	9,647	-168,439	-8253,51	472,703	19,451	-168,439	9,647						
Wind angl	380C1F2	19451	9480	-168322	19451	9900	168633	38,902	19,38	0,311	12,5955	784,89	38,902	0,311	19,38						
	380C1F3	19451	9272	-168189	19451	9651	168442	38,902	18,923	0,253	8,096	605,536	38,902	0,253	18,923						
	150C1F1	0	0	0	4863	2525	42200	4,863	2,525	42,2	2067,8	150,4715	4,863	42,2	2,525						
	150C1F2	0	0	0	0	0	0	0	0	0	0	0	0	0	0						
	150C1F3	0	0	0	4863	2413	42111	4,863	2,413	42,111	1347,552	103,9625	4,863	42,111	2,413						
1a	Comp. gl	3462	1387	-31599	0	0	0	3,462	1,387	-31,599	-774,176	41,0786	3,462	-31,599	1,387	1a	-5008,21	1215,181	75,426	-105,253	30,273
Wind, 10 (	GW / opgv	1669	670	-15226	0	0	0	1,669	0,67	-15,226	-874,429	39,74654	1,669	-15,226	0,67	Wind angle:	0 dgr				
Permaner	380C1F1	12781	5133	-116856	0	0	0	12,781	5,133	-116,856	-5725,94	251,517	12,781	-116,856	5,133						
Wind angl	380C1F2	12781	5131	-116856	12781	5131	116856	25,562	10,262	0	0	415,611	25,562	0	10,262						
	380C1F3	12781	5128	-116856	12781	5128	116856	25,562	10,256	0	0	328,192	25,562	0	10,256						
	150C1F1	0	0	0	3195	1283	29214	3,195	1,283	29,214	1431,486	80,4395	3,195	29,214	1,283						
	150C1F2	0	0	0	0	0	0	0	0	0	0	0	0	0	0						
	150C1F3	0	0	0	3195	1282	29214	3,195	1,282	29,214	934,848	58,5965	3,195	29,214	1,282						
1b	Comp. gl	3461	1577	-36072	0	0	0	3,461	1,577	-36,072	-883,764	45,73155	3,461	-36,072	1,577	1b	-5838,75	1411,965	75,385	-122,267	35,35
Wind, -20	GW / opgv	1668	769	-17575	0	0	0	1,668	0,769	-17,575	-1009,33	45,43135	1,668	-17,575	0,769	Wind angle:	0 dgr				
Permaner	380C1F1	12774	6002	-137240	0	0	0	12,774	6,002	-137,24	-6724,76	294,098	12,774	-137,24	6,002						
Wind angl	380C1F2	12774	6001	-137240	12774	6001	137240	25,548	12,002	0	0	486,081	25,548	0	12,002						
	380C1F3	12774	6000	-137240	12774	6000	137240	25,548	12	0	0	384	25,548	0	12						
	150C1F1	0	0	0	3193	1500	34310	3,193	1,5	34,31	1681,19	91,0615	3,193	34,31	1,5						
	150C1F2	0	0	0	0	0	0	0	0	0	0	0	0	0	0						
	150C1F3	0	0	0	3193	1500	34310	3,193	1,5	34,31	1097,92	65,5615	3,193	34,31	1,5						
3	Comp. gl	6606	2468	-56251	0	0	0	6,606	2,468	-56,251	-1378,15	74,0083	6,606	-56,251	2,468	3	-7192,51	1569,216	95,304	-157,404	39,113
Wind+ice,	GW / opgv	3238	1216	-27659	0	0	0	3,238	1,216	-27,659	-1588,46	72,29576	3,238	-27,659	1,216	Wind angle:	0 dgr				
Permaner	380C1F1	15538	6444	-146988	0	0	0	15,538	6,444	-146,988	-7202,41	315,756	15,538	-146,988	6,444						
Wind angl	380C1F2	15538	6442	-146988	15538	6442	146988	31,076	12,884	0	0	521,802	31,076	0	12,884						
	380C1F3	15538	6440	-146988	15538	6440	146988	31,076	12,88	0	0	412,16	31,076	0	12,88						
	150C1F1	0	0	0	3885	1611	36747	3,885	1,611	36,747	1800,603	100,3065	3,885	36,747	1,611						
	150C1F2	0	0	0	0	0	0	0	0	0	0	0	0	0	0						
	150C1F3	0	0	0	3885	1610	36747	3,885	1,61	36,747	1175,904	72,8875	3,885	36,747	1,61						
4	Comp. gl	4665	1803	-41233	0	0	0	4,665	1,803	-41,233	-1010,21	53,73675	4,665	-41,233	1,803	4	-6121,81	1437,481	90,46	-130,155	35,791
Constructi	GW / opgv	2271	879	-20083	0	0	0	2,271	0,879	-20,083	-1153,37	52,20693	2,271	-20,083	0,879	Wind angle:	0 dgr				
Permaner	380C1F1	15186	6021	-137677	0	0	0	15,186	6,021	-137,677	-6746,17	295,029	15,186	-137,677	6,021						
Wind angl	380C1F2	15186	6020	-137678	15186	6020	137678	30,372	12,04	0	0	487,62	30,372	0	12,04						
	380C1F3	15186	6019	-137678	15186	6019	137678	30,372	12,038	0	0	385,216	30,372	0	12,038						
	150C1F1	0	0	0	3797	1505	34419	3,797	1,505	34,419	1686,531	94,6285	3,797	34,419	1,505						
	150C1F2	0	0	0	0	0	0	0	0	0	0	0	0	0	0						
	150C1F3	0	0	0	3797	1505	34419	3,797	1,505	34,419	1101,408	69,0435	3,797	34,419	1,505						
6	Comp. gl	3462	1380	-31600	0	0	0	3,462	1,38	-31,6	-774,2	40,9071	3,462	-31,6	1,38	6	-5008,29	1208,655	75,426	-105,255	30,107
Permaner	GW / opgv	1669	665	-15226	0	0	0	1,669	0,665	-15,226	-874,429	39,45939	1,669	-15,226	0,665	0					
Permaner	380C1F1	12781	5102	-116857	0	0	0	12,781	5,102	-116,857	-5725,99	249,998	12,781	-116,857	5,102						
	380C1F2	12781	5102	-116857	12781	5102	116857	25,562	10,204	0	0	413,262	25,562	0	10,204						
	380C1F3	12781	5102	-116857	12781	5102	116857	25,562	10,204	0	0	326,528	25,562	0	10,204						
	150C1F1	0	0	0	3195	1276	29214	3,195	1,276	29,214	1431,486	80,0965	3,195	29,214	1,276						
	150C1F2	0	0	0	0	0	0	0	0	0	0	0	0	0	0						
	150C1F3	0	0	0	3195	1276	29214	3,195	1,276	29,214	934,848	58,4045	3,195	29,214	1,276						
1a	Comp. gl	3463	3790	-36327	0	0	0	3,463	3,79	-36,327	-890,012	99,95415	3,463	-36,327	3,79	1a	-6431,87	3142,701	75,435	-137,218	79,063
Wind, 10 (	GW / opgv	1670	2446	-19823	0	0	0	1,67	2,446	-19,823	-1138,43	141,743	1,67	-19,823	2,446	Wind angle:	45 dgr				
Permaner	380C1F1	12783	14850	-136867	0	0	0	12,783	14,85	-136,867	-6706,48	727,65	12,783	-136,867	14,85						
Wind angl	380C1F2	12782	14113	-134385	12782	12580	129558	25,564	26,693	-4,827	-195,494	1081,067	25,564	-4,827	26,693						
	380C1F3	12782	13202	-131458	12782	11828	127384	25,564	25,03	-4,074	-130,368	800,96	25,564	-4,074	25,03						
	150C1F1	0	0	0	3196	3297	32854	3,196	3,297	32,854	1609,846	179,131	3,196	32,854	3,297						
	150C1F2	0	0	0	0	0	0	0	0	0	0	0	0	0	0						
	150C1F3	0	0	0	3195	2957	31846	3,195	2,957	31,846	1019,072	112,1965	3,195	31,846	2,957						
1b	Comp. gl	3461	2275	-36576	0	0	0	3,461	2,275	-36,576	-896,112	62,83255	3,461	-36,576	2,275	1b	-5999,52	1972,634	75,385	-125,871	49,553
Wind, -20	GW / opgv	1668	1277	-18122	0	0	0	1,668	1,277	-18,122	-1040,75	74,60579	1,668	-18,122	1,277	Wind angle:	45 dgr				
Permaner	380C1F1	12774	8816	-139418	0	0	0	12,774	8,816	-139,418	-6831,48	431,984	12,774	-139,418	8,816						
Wind angl	380C1F2	12774	8609	-139116	12774	8178	138553	25,548	16,787	-0,563	-22,8015	679,8735	25,548	-0,563	16,787						
	380C1F3	12774	8354	-138771	12774	7966	138310	25,548	16,32	-0,461	-14,752	522,24	25,548	-0,461	16,32						
	150C1F1	0	0	0	3193	2087	34692	3,193	2,087	34,692	1699,908	119,8245	3,193	34,692	2,087						
	150C1F2	0	0	0	0	0	0	0	0	0	0	0	0	0	0						
	150C1F3	0	0	0	3193	1991	34577	3,193	1,991	34,577	1106,464	81,2735	3,193	34,577	1,991						

3	Comp. gl	6607	6166	-61652	0	0	0	6,607	6,166	-61,652	-1510,47	164,6114	6,607	-61,652	6,166	3	-8290,55	3299,323	95,313	-182,478	82,994				
Wind+ice, GW / opgv		3239	3937	-32993	0	0	0	3,239	3,937	-32,993	-1894,79	228,5636	3,239	-32,993	3,937	Wind angle: 45 dgr									
Permanen	380C1F1	15540	14587	-159465	0	0	0	15,54	14,587	-159,465	-7813,79	714,763	15,54	-159,465	14,587										
Wind ang	380C1F2	15540	13976	-157840	15539	12705	154736	31,079	26,681	-3,104	-125,712	1080,581	31,079	-3,104	26,681										
	380C1F3	15539	13221	-155949	15539	12080	153364	31,078	25,301	-2,585	-82,72	809,632	31,078	-2,585	25,301										
	150C1F1	0	0	0	3885	3302	38980	3,885	3,302	38,98	1910,02	183,1655	3,885	38,98	3,302										
	150C1F2	0	0	0	0	0	0	0	0	0	0	0	0	0	0										
	150C1F3	0	0	0	3885	3020	38341	3,885	3,02	38,341	1226,912	118,0075	3,885	38,341	3,02										
4	Comp. gl	4665	2492	-41555	0	0	0	4,665	2,492	-41,555	-1018,1	70,61725	4,665	-41,555	2,492	4	-6238,73	1993,987	90,46	-132,769	49,891				
Constructi	GW / opgv	2271	1378	-20433	0	0	0	2,271	1,378	-20,433	-1173,47	80,8645	2,271	-20,433	1,378	Wind angle: 45 dgr									
Permanen	380C1F1	15186	8813	-139326	0	0	0	15,186	8,813	-139,326	-6826,97	431,837	15,186	-139,326	8,813										
Wind ang	380C1F2	15186	8610	-139095	15186	8184	138665	30,372	16,794	-0,43	-17,415	680,157	30,372	-0,43	16,794										
	380C1F3	15186	8358	-138831	15186	7974	138479	30,372	16,332	-0,352	-11,264	522,624	30,372	-0,352	16,332										
	150C1F1	0	0	0	3797	2088	34707	3,797	2,088	34,707	1700,643	123,1955	3,797	34,707	2,088										
	150C1F2	0	0	0	0	0	0	0	0	0	0	0	0	0	0										
	150C1F3	0	0	0	3797	1994	34620	3,797	1,994	34,62	1107,84	84,6915	3,797	34,62	1,994										
1a	Comp. gl	3463	6009	-44934	0	0	0	3,463	6,009	-44,934	-1100,88	154,3197	3,463	-44,934	6,009	1a	-7692,08	5182,787	75,451	-161,049	131,067				
Wind, 10	GW / opgv	1670	4076	-26872	0	0	0	1,67	4,076	-26,872	-1543,26	235,3539	1,67	-26,872	4,076	Wind angle: 90 dgr									
Permanen	380C1F1	12786	23805	-171934	0	0	0	12,786	23,805	-171,934	-8424,77	1166,445	12,786	-171,934	23,805										
Wind ang	380C1F2	12785	22393	-166026	12785	22393	166026	25,57	44,786	0	0	1813,833	25,57	0	44,786										
	380C1F3	12785	20640	-158830	12785	20640	158830	25,57	41,28	0	0	1320,96	25,57	0	41,28										
	150C1F1	0	0	0	3196	5951	42983	3,196	5,951	42,983	2106,167	309,177	3,196	42,983	5,951										
	150C1F2	0	0	0	0	0	0	0	0	0	0	0	0	0	0										
	150C1F3	0	0	0	3196	5160	39708	3,196	5,16	39,708	1270,656	182,698	3,196	39,708	5,16										
1b	Comp. gl	3461	2893	-37768	0	0	0	3,461	2,893	-37,768	-925,316	77,97355	3,461	-37,768	2,893	1b	-6207,72	2543,349	75,389	-129,891	64,098				
Wind, -20	GW / opgv	1669	1737	-19345	0	0	0	1,669	1,737	-19,345	-1110,98	101,0244	1,669	-19,345	1,737	Wind angle: 90 dgr									
Permanen	380C1F1	12775	11320	-144512	0	0	0	12,775	11,32	-144,512	-7081,09	554,68	12,775	-144,512	11,32										
Wind ang	380C1F2	12774	10923	-143544	12774	10923	143544	25,548	21,846	0	0	884,763	25,548	0	21,846										
	380C1F3	12774	10432	-142426	12774	10432	142426	25,548	20,864	0	0	667,648	25,548	0	20,864										
	150C1F1	0	0	0	3194	2830	36128	3,194	2,83	36,128	1770,272	156,237	3,194	36,128	2,83										
	150C1F2	0	0	0	0	0	0	0	0	0	0	0	0	0	0										
	150C1F3	0	0	0	3194	2608	35606	3,194	2,608	35,606	1139,392	101,023	3,194	35,606	2,608										
3	Comp. gl	6608	9529	-72110	0	0	0	6,608	9,529	-72,11	-1766,7	247,0069	6,608	-72,11	9,529	3	-9541,5	5097,045	95,329	-208,435	128,863				
Wind+ice, GW / opgv		3241	6414	-41862	0	0	0	3,241	6,414	-41,862	-2404,13	370,8192	3,241	-41,862	6,414	Wind angle: 90 dgr									
Permanen	380C1F1	15543	22042	-184145	0	0	0	15,543	22,042	-184,145	-9023,11	1080,058	15,543	-184,145	22,042										
Wind ang	380C1F2	15542	20861	-179791	15542	20861	179791	31,084	41,722	0	0	1689,741	31,084	0	41,722										
	380C1F3	15541	19398	-174585	15541	19398	174585	31,082	38,796	0	0	1241,472	31,082	0	38,796										
	150C1F1	0	0	0	3886	5511	46036	3,886	5,511	46,036	2255,764	291,412	3,886	46,036	5,511										
	150C1F2	0	0	0	0	0	0	0	0	0	0	0	0	0	0										
	150C1F3	0	0	0	3885	4849	43646	3,885	4,849	43,646	1396,672	176,5355	3,885	43,646	4,849										
4	Comp. gl	4665	3094	-42346	0	0	0	4,665	3,094	-42,346	-1037,48	85,36625	4,665	-42,346	3,094	4	-6390,48	2553,878	90,465	-135,648	64,165				
Constructi	GW / opgv	2271	1821	-21255	0	0	0	2,271	1,821	-21,255	-1220,67	106,306	2,271	-21,255	1,821	Wind angle: 90 dgr									
Permanen	380C1F1	15187	11269	-143280	0	0	0	15,187	11,269	-143,28	-7020,72	552,181	15,187	-143,28	11,269										
Wind ang	380C1F2	15187	10881	-142523	15187	10881	142523	30,374	21,762	0	0	881,361	30,374	0	21,762										
	380C1F3	15187	10401	-141650	15187	10401	141650	30,374	20,802	0	0	665,664	30,374	0	20,802										
	150C1F1	0	0	0	3797	2817	35820	3,797	2,817	35,82	1755,18	158,9165	3,797	35,82	2,817										
	150C1F2	0	0	0	0	0	0	0	0	0	0	0	0	0	0										
	150C1F3	0	0	0	3797	2600	35413	3,797	2,6	35,413	1133,216	104,0835	3,797	35,413	2,6										
1a	Comp. gl	3463	3379	-35022	0	0	0	3,463	3,379	-35,022	-858,039	89,88465	3,463	-35,022	3,379	1a	-5313,5	3065,017	75,434	-109,091	77,444				
Wind, 10	GW / opgv	1669	2140	-18636	0	0	0	1,669	2,14	-18,636	-1070,27	124,1686	1,669	-18,636	2,14	Wind angle: -45 dgr									
Permanen	380C1F1	12782	13189	-131415	0	0	0	12,782	13,189	-131,415	-6439,34	646,261	12,782	-131,415	13,189										
Wind ang	380C1F2	12782	12580	-129558	12782	14113	134385	25,564	26,693	4,827	195,4935	1081,067	25,564	4,827	26,693										
	380C1F3	12782	11828	-127384	12782	13202	131458	25,564	25,03	4,074	130,368	800,96	25,564	4,074	25,03										
	150C1F1	0	0	0	3196	3712	34217	3,196	3,712	34,217	1676,633	199,466	3,196	34,217	3,712										
	150C1F2	0	0	0	0	0	0	0	0	0	0	0	0	0	0										
	150C1F3	0	0	0	3196	3301	32864	3,196	3,301	32,864	1051,648	123,21	3,196	32,864	3,301										
1b	Comp. gl	3461	2159	-36425	0	0	0	3,461	2,159	-36,425	-892,413	59,99055	3,461	-36,425	2,159	1b	-5867,87	1950,919	75,386	-122,581	49,1				
Wind, -20	GW / opgv	1668	1192	-17961	0	0	0	1,668	1,192	-17,961	-1031,5	69,72424	1,668	-17,961	1,192	Wind angle: -45 dgr									
Permanen	380C1F1	12774	8350	-138766	0	0	0	12,774	8,35	-138,766	-6799,53	409,15	12,774	-138,766	8,35										
Wind ang	380C1F2	12774	8178	-138553	12774	8609	139116	25,548	16,787	0,563	22,8015	679,8735	25,548	0,563	16,787										
	380C1F3	12774	7966	-138310	12774	8354	138771	25,548	16,32	0,461	14,752	522,24	25,548	0,461	16,32										
	150C1F1	0	0	0	3194	2204	34854	3,194	2,204	34,854	1707,846	125,563	3,194	34,854	2,204										
	150C1F2	0	0	0	0	0	0	0	0	0	0	0	0	0	0										
	150C1F3	0	0	0	3193	2088	34693	3,193	2,088	34,693	1110,176	84,3775	3,193	34,693	2,088										
3	Comp. gl	6606	5542	-60127	0	0	0	6,606	5,542	-60,127	-1473,11	149,3213	6,606	-60,127	5,542	3	-7516,68	3215,995	95,311	-163,073	81,16				
Wind+ice, GW / opgv		3239	3474	-31567	0	0	0	3,239	3,474	-31,567	-1812,89	201,9735	3,239	-31,567	3,474	Wind angle: -45 dgr									
Permanen	380C1F1	15539	13210	-155921	0	0	0	15,539	13,21	-155,921	-7640,13	647,29	15,539	-155,921	13,21										
Wind ang	380C1F2	15539	12705	-154736	15540	13976	157840	31,079	26,681	3,104	125,712	1080,581	31,079	3,104	26,681										
0	380C1F3	15539	12080	-153364	15539	13221	155949	31,078	25,301	2,585	82,72	809,632	31,078	2,585	25,301										
	150C1F1	0	0	0	3885	3647	39866	3,885	3,647	39,866	1953,434	200,0705	3,885	39,866	3,647										
	150C1F2	0	0	0	0	0	0	0	0	0	0	0	0	0	0										
	150C1F3	0	0	0	3885	3305	38987	3,885	3,305	38,987	1247,584	127,1275	3,885	38,987	3,305										
4	Comp. gl	4665	2379	-41456	0	0	0	4,665	2,379	-41,456	-1015,67	67,84875	4,665	-41,456	2,379	4	-6139,58	1972,693	90,46	-130,29	49,447				
Constructi	GW / opgv	2271	1296	-20328	0	0	0	2,271	1,296	-20,328	-1167,44	76,15524	2,271	-20,328	1,296	Wind angle: -45 dgr									
Permanen	380C1F1	15186	8354	-138827	0	0	0	15,186	8,354	-138,827	-6802,52	409,346	15,186	-138,827	8,354										
Wind ang	380C1F2	15186	8184	-138665	15186	8610	139095	30,372	16,794	0,43	17,415	680,157	30,372	0,43	16,794										
	380C1F3	15186	7974	-138479	15186	8358	138831	30,372	16,332	0,352	11,264	522,624	30,372	0,352	16,332										
	150C1F1	0	0	0	3797	2203	34831	3,797	2,203	34,831	1706,719	128,8305	3,797	34,831	2,203										
	150C1F2	0	0	0	0	0	0	0	0	0	0	0	0	0	0										
	150C1F3	0	0	0	3797	2089	34708	3,797	2,089	34,708	1110,656	87,7315	3,797	34,708	2,089										
1a	Comp. gl	4617	1761	-40155	4617	1761	40155	9,234	3,522	0	0	105,2187	9,234	0	3,522	1a	-9218,03	1400,651	86,127	-258,622	32,772				
Wind, 10	GW / opgv	2226	852	-19378	2226	852	19378	4,452	1,704	0	0	101,2442	4,452	0	1,704	Wind angle: 0 dgr									
Permanen	380C1F1	17045	6483	-147784	17045	6483	147784	34,09	12,966	0	0	635,334	34,09	0	12,966										
Wind ang	380C1F2	17045	6481	-147784	0	0	0	17,045	6,481	-147,784	-5985,25	262,4805	17,045	-147,784	6,481										
	380C1F3	17045	6479	-147784	0	0	0	17,045	6,479	-147,784	-4729,09	207,328	17,045	-147,784	6,479										
	150C1F1	0	0	0	0	0	0	0	0	0	0	0	0	0	0										
	150C1F2	0	0	0	4261	1620	36946	4,261	1,62	36,946	1496,313	89,0455	4,261	36,946	1,62										
	150C1F3	0	0	0	0	0	0	0	0	0	0	0	0	0	0										
1b	Comp. gl	4615	1970	-45077	4615	1970	45077	9,23	3,94	0	0	115,4515	9,23	0	3,94	1b	-10589,4	1593,112	86,083	-297,097	37,402				
Wind, -20	GW / opgv	2225	961	-21970	2225	961	21970	4,45	1,922	0	0	113,7625	4,45	0	1,922	Wind angle: 0 dgr									
Permanen	380C1F1	17036	7422	-169770	17036	7422	169770	34,072	14,844	0	0	727,356	34,072	0	14,844										
Wind ang	380C1F2	17036	7421	-169770	0	0	0	17,036	7,421	-169,77	-6875,69	300,5505	17,036	-169,77	7,421										
	380C1F3	17036	7420	-169770	0	0	0	17,036	7,42	-169,77	-5432,64	237,44	17,036	-169,77	7,42										
	150C1F1	0	0	0	0	0	0	0	0	0	0	0	0	0	0										
	150C1F2	0	0	0	4259	1855	42443	4,259	1,855	42,443	1718,942	98,552	4,259	42,443	1,855										
	150C1F3	0	0	0	0	0	0	0	0	0	0	0	0	0	0										
3	Comp. gl	7762	2793	-63692	7762	2793	63692	15,524	5,586	0	0	168,6812	15,524	0	5,586	3	-11054,6	1761,801	107,275	-310,149	41,328				
Wind+ice, GW / opgv		3796	1374	-31270	3796	1374	31270	7,592	2,748	0	0	163,5876	7,592	0	2,748	Wind angle: 0 dgr									
Permanen	380C1F1	19802	7765	-177228	19802	7765	177228	39,604	15,53	0	0	760,97	39,604	0	15,53										
Wind ang	380C1F2	19802	7763	-177228	0	0	0	19,802	7,763	-177,228	-7177,73	314,4015	19,802	-177,228	7,763										
	380C1F3	19802	7760	-177228	0	0	0	19,802	7,76	-177,228	-5671,3	248,32	19,802	-177,228	7,76										
	150C1F1	0	0	0	0	0	0	0	0	0	0	0	0	0	0										
	150C1F2	0	0	0	4951	1941	44307	4,951	1,941	44,307	1794,434	105,841	4,951	44,307	1,941										
	150C1F3	0	0	0	0	0	0	0	0	0	0	0	0	0	0										
4	Comp. gl	5821	2154	-49285	5821	2154	49285	11,642	4,308	0	0	129,4121	11,642	0	4,308	4	-10455,7	1604,533	99,965	-293,347	37,549				
Constructi	GW / opgv	2828	1049	-23990	2828	1049	23990	5,656	2,098	0	0	124,7867	5,656	0	2,098	Wind angle: 0 dgr									
Permanen	380C1F1	19451	7328	-167627	19451	7328	167627	38,902	14,656	0	0	718,144	38,902	0	14,656										
Wind ang	380C1F2	19451	7328	-167627	0	0	0	19,451	7,328	-167,627	-6788,89	296,784	19,451	-167,627	7,328										
	380C1F3	19451	7327	-167627	0	0	0	19,451	7,327	-167,627	-5364,06	234,464	19,451	-167,627	7,327										
	150C1F1	0	0	0	0	0	0	0	0	0	0	0	0	0	0										
	150C1F2	0	0	0	4863	1832	41907	4,863	1,832	41,907	1697,234	100,9425	4,863	41,907	1,832										
	150C1F3	0	0	0	0	0	0	0	0	0	0	0	0	0	0										
6	Comp. gl	5195	1931	-44221	5195	1931	44221	10,39	3,862	0	0	115,9185	10,39	0	3,862	6	-10132,3	1534,135	96,902	-284,272	35,867				
Permanen	GW / opgv	2505	932	-21353	2505	932	21353	5,01	1,864	0	0	110,8571	5,01	0	1,864	0									
Permanen	380C1F1	19177	7092	-162441	19177	7092	162441	38,354	14,184	0	0	695,016	38,354	0	14,184										
	380C1F2	19177	7092	-162441	0	0	0	19,177	7,092	-162,441	-6578,86	287,226	19,177	-162,441	7,092										
	380C1F3	19177	7092	-162441	0	0	0	19,177	7,092	-162,441	-5198,11	226,944	19,177	-162,441	7,092										
	150C1F1	0	0	0	0	0	0	0	0	0	0	0	0	0	0										
	150C1F2	0	0	0	4794	1773	40610	4,794	1,773	40,61	1644,705	98,1735	4,794	40,61	1,773										
	150C1F3	0	0	0	0	0	0	0	0	0	0	0	0	0	0										
1a	Comp. gl	4618	4106	-43575	4618	3710	42599	9,236	7,816	-0,976	-23,912	210,4258	9,236	-0,976	7,816	1a	-10252	3219,216	86,134	-285,476	76,066				
Wind, 10	GW / opgv	2226	2577	-22837	2226	2283	21897	4,452	4,86	-0,94	-53,9842	282,4933	4,452	-0,94	4,86	Wind angle: 45 dgr									
Permanen	380C1F1	17047	15962	-162308	17046	14360	158203	34,093	30,322	-4,105	-201,145	1485,778	34,093	-4,105	30,322										
Wind ang	380C1F2	17046	15252	-160427	0	0	0	17,046	15,252	-160,427	-6497,29	617,706	17,046	-160,427	15,252										
	380C1F3	17046	14373	-158235	0	0	0	17,046	14,373	-158,235	-5063,52	459,936	17,046	-158,235	14,373										
	150C1F1	0	0	0	0	0	0	0	0	0	0	0	0	0	0										
	150C1F2	0	0	0	4261	3443	39207	4,261	3,443	39,207	1587,884	162,877	4,261	39,207	3,443										
	150C1F3	0	0	0	0	0	0	0	0	0	0	0	0	0	0										
1b	Comp. gl	4615	2661	-45417	4615	2548	45313	9,23	5,209	-0,104	-2,548	146,542	9,23	-0,104	5,209	1b	-10694,9	2128,387	86,083	-299,818	50,153				
Wind, -20	GW / opgv	2225	1462	-22344	2225	1379	22232	4,45	2,841	-0,112	-6,43216	166,5406	4,45	-0,112	2,841	Wind angle: 45 dgr									
Permanen	380C1F1	17036	10205	-171233	17036	9748	170789	34,072	19,953	-0,444	-21,756	977,697	34,072	-0,444	19,953										
Wind ang	380C1F2	17036	10003	-171027	0	0	0	17,036	10,003	-171,027	-6926,59	405,1215	17,036	-171,027	10,003										
	380C1F3	17036	9752	-170792	0	0	0	17,036	9,752	-170,792	-5465,34	312,064	17,036	-170,792	9,752										
	150C1F1	0	0	0	0	0	0	0	0	0	0	0	0	0	0										
	150C1F2	0	0	0	4259	2395	42661	4,259	2,395	42,661	1727,771	120,422	4,259	42,661	2,395										
	150C1F3	0	0	0	0	0	0	0	0	0	0	0	0	0	0										
3	Comp. gl	7762	6450	-68138	7762	5837	66862	15,524	12,287	-1,276	-31,262	332,8557	15,524	-1,276	12,287	3	-11766,8	3503,186	107,28	-328,542	83,242				
Wind+ice, GW / opgv		3796	4058	-35760	3796	3604	34528	7,592	7,662	-1,232	-70,7538	445,7986	7,592	-1,232	7,662	Wind angle: 45 dgr									
Permanen	380C1F1	19804	15768	-186490	19803	14428	183802	39,607	30,196	-2,688	-131,712	1479,604	39,607	-2,688	30,196										
Wind ang	380C1F2	19803	15174	-185252	0	0	0	19,803	15,174	-185,252	-7502,71	614,547	19,803	-185,252	15,174										
	380C1F3	19803	14439	-183822	0	0	0	19,803	14,439	-183,822	-5882,3	462,048	19,803	-183,822	14,439										
	150C1F1	0	0	0	0	0	0	0	0	0	0	0	0	0	0										
	150C1F2	0	0	0	4951	3484	45728	4,951	3,484	45,728	1851,984	168,3325	4,951	45,728	3,484										
	150C1F3	0	0	0	0	0	0	0	0	0	0	0	0	0	0										
4	Comp. gl	5821	2840	-49522	5821	2728	49448	11,642	5,568	-0,074	-1,813	160,2821	11,642	-0,074	5,568	4	-10539,5	2137,553	99,965	-295,508	50,246				
Constructi	GW / opgv	2828	1545	-24251	2828	1464	24172	5,656	3,009	-0,079	-4,53697	177,1054	5,656	-0,079	3,009	Wind angle: 45 dgr									
Permanen	380C1F1	19451	10101	-168800	19451	9647	168439	38,902	19,748	-0,361	-17,689	967,652	38,902	-0,361	19,748										
Wind ang	380C1F2	19451	9900	-168633	0	0	0	19,451	9,9	-168,633	-6829,64	400,95	19,451	-168,633	9,9										
	380C1F3	19451	9651	-168442	0	0	0	19,451	9,651	-168,442	-5390,14	308,832	19,451	-168,442	9,651										
	150C1F1	0	0	0	0	0	0	0	0	0	0	0	0	0	0										
	150C1F2	0	0	0	4863	2370	42081	4,863	2,37	42,081	1704,281	122,7315	4,863	42,081	2,37										
	150C1F3	0	0	0	0	0	0	0	0	0	0	0	0	0	0										
1a	Comp. gl	4618	6249	-50434	4618	6249	50434	9,236	12,498	0	0	325,1348	9,236	0	12,498	1a	-11389	5109,752	86,151	-318,922	120,683				
Wind, 10	GW / opgv	2227	4162	-28849	2227	4162	28849	4,454	8,324	0	0	481,4324	4,454	0	8,324	Wind angle: 90 dgr									
Permanen	380C1F1	17050	24622	-190595	17050	24622	190595	34,1	49,244	0	0	2412,956	34,1	0	49,244										
Wind ang	380C1F2	17050	23251	-185638	0	0	0	17,05	23,251	-185,638	-7518,34	941,6655	17,05	-185,638	23,251										

	380C1F3	17049	21553	-179693	0	0	0	17,049	21,553	-179,693	-5750,18	689,696	17,049	-179,693	21,553										
	150C1F1	0	0	0	0	0	0	0	0	0	0	0	0	0	0										
	150C1F2	0	0	0	4262	5813	46409	4,262	5,813	46,409	1879,565	258,8675	4,262	46,409	5,813										
	150C1F3	0	0	0	0	0	0	0	0	0	0	0	0	0	0										
1b	Comp. gl	4615	3264	-46248	4615	3264	46248	9,23	6,528	0	0	178,8575	9,23	0	6,528	1b	-10834,4	2661,207	86,083	-303,892	62,731				
Wind, -20	GW / opgv	2225	1906	-23220	2225	1906	23220	4,45	3,812	0	0	222,3052	4,45	0	3,812	Wind angle: 90 dgr									
Permanen	380C1F1	17036	12643	-174784	17036	12643	174784	34,072	25,286	0	0	1239,014	34,072	0	25,286										
Wind ang	380C1F2	17036	12258	-174101	0	0	0	17,036	12,258	-174,101	-7051,09	496,449	17,036	-174,101	12,258										
	380C1F3	17036	11782	-173316	0	0	0	17,036	11,782	-173,316	-5546,11	377,024	17,036	-173,316	11,782										
	150C1F1	0	0	0	0	0	0	0	0	0	0	0	0	0	0										
	150C1F2	0	0	0	4259	3065	43525	4,259	3,065	43,525	1762,763	147,557	4,259	43,525	3,065										
	150C1F3	0	0	0	0	0	0	0	0	0	0	0	0	0	0										
3	Comp. gl	7764	9752	-77198	7764	9752	77198	15,528	19,504	0	0	509,6804	15,528	0	19,504	3	-12499,1	5303,667	107,298	-350,246	126,261				
Wind+ice,	GW / opgv	3798	6497	-43749	3798	6497	43749	7,596	12,994	0	0	752,0184	7,596	0	12,994	Wind angle: 90 dgr									
Permanen	380C1F1	19806	23003	-206105	19806	23003	206105	39,612	46,006	0	0	2254,294	39,612	0	46,006										
Wind ang	380C1F2	19806	21856	-202544	0	0	0	19,806	21,856	-202,544	-8203,03	885,168	19,806	-202,544	21,856										
	380C1F3	19805	20437	-198338	0	0	0	19,805	20,437	-198,338	-6346,82	653,984	19,805	-198,338	20,437										
	150C1F1	0	0	0	0	0	0	0	0	0	0	0	0	0	0										
	150C1F2	0	0	0	4951	5464	50636	4,951	5,464	50,636	2050,758	248,5225	4,951	50,636	5,464										
	150C1F3	0	0	0	0	0	0	0	0	0	0	0	0	0	0										
4	Comp. gl	5821	3433	-50119	5821	3433	50119	11,642	6,866	0	0	192,0831	11,642	0	6,866	4	-10654,3	2663,808	99,965	-298,852	62,671				
Constructi	GW / opgv	2828	1979	-24882	2828	1979	24882	5,656	3,958	0	0	231,6065	5,656	0	3,958	Wind angle: 90 dgr									
Permanen	380C1F1	19451	12511	-171700	19451	12511	171700	38,902	25,022	0	0	1226,078	38,902	0	25,022										
Wind ang	380C1F2	19451	12131	-171140	0	0	0	19,451	12,131	-171,14	-6931,17	491,3055	19,451	-171,14	12,131										
	380C1F3	19451	11661	-170497	0	0	0	19,451	11,661	-170,497	-5455,9	373,152	19,451	-170,497	11,661										
	150C1F1	0	0	0	0	0	0	0	0	0	0	0	0	0	0										
	150C1F2	0	0	0	4863	3033	42785	4,863	3,033	42,785	1732,793	149,583	4,863	42,785	3,033										
	150C1F3	0	0	0	0	0	0	0	0	0	0	0	0	0	0										
1a	Comp. gl	4618	3710	-42599	4618	4106	43575	9,236	7,816	0,976	23,912	210,4258	9,236	0,976	7,816	1a	-9415,54	3131,771	86,135	-265,931	73,628				
Wind, 10	GW / opgv	2226	2283	-21897	2226	2577	22837	4,452	4,86	0,94	53,9842	282,4933	4,452	0,94	4,86	Wind angle: -45 dgr									
Permanen	380C1F1	17046	14360	-158203	17047	15962	162308	34,093	30,322	4,105	201,145	1485,778	34,093	4,105	30,322										
Wind ang	380C1F2	17046	13772	-156827	0	0	0	17,046	13,772	-156,827	-6351,49	557,766	17,046	-156,827	13,772										
	380C1F3	17046	13045	-155232	0	0	0	17,046	13,045	-155,232	-4967,42	417,44	17,046	-155,232	13,045										
	150C1F1	0	0	0	0	0	0	0	0	0	0	0	0	0	0										
	150C1F2	0	0	0	4262	3813	40107	4,262	3,813	40,107	1624,334	177,8675	4,262	40,107	3,813										
	150C1F3	0	0	0	0	0	0	0	0	0	0	0	0	0	0										
1b	Comp. gl	4615	2548	-45313	4615	2661	45417	9,23	5,209	0,104	2,548	146,542	9,23	0,104	5,209	1b	-10604	2103,357	86,083	-297,706	49,455				
Wind, -20	GW / opgv	2225	1379	-22232	2225	1462	22344	4,45	2,841	0,112	6,43216	166,5406	4,45	0,112	2,841	Wind angle: -45 dgr									
Permanen	380C1F1	17036	9748	-170789	17036	10205	171233	34,072	19,953	0,444	21,756	977,697	34,072	0,444	19,953										
Wind ang	380C1F2	17036	9580	-170644	0	0	0	17,036	9,58	-170,644	-6911,08	387,99	17,036	-170,644	9,58										
	380C1F3	17036	9371	-170479	0	0	0	17,036	9,371	-170,479	-5455,33	299,872	17,036	-170,479	9,371										
	150C1F1	0	0	0	0	0	0	0	0	0	0	0	0	0	0										
	150C1F2	0	0	0	4259	2501	42757	4,259	2,501	42,757	1731,659	124,715	4,259	42,757	2,501										
	150C1F3	0	0	0	0	0	0	0	0	0	0	0	0	0	0										
3	Comp. gl	7762	5837	-66862	7762	6450	68138	15,524	12,287	1,276	31,262	332,8557	15,524	1,276	12,287	3	-11118,8	3429,986	107,28	-313,288	81,201				
Wind+ice,	GW / opgv	3796	3604	-34528	3796	4058	35760	7,592	7,662	1,232	70,75376	445,7986	7,592	1,232	7,662	Wind angle: -45 dgr									
Permanen	380C1F1	19803	14428	-183802	19804	15768	186490	39,607	30,196	2,688	131,712	1479,604	39,607	2,688	30,196										
Wind ang	380C1F2	19803	13936	-182911	0	0	0	19,803	13,936	-182,911	-7407,9	564,408	19,803	-182,911	13,936										
0	380C1F3	19803	13326	-181886	0	0	0	19,803	13,326	-181,886	-5820,35	426,432	19,803	-181,886	13,326										
	150C1F1	0	0	0	0	0	0	0	0	0	0	0	0	0	0										
	150C1F2	0	0	0	4951	3794	46313	4,951	3,794	46,313	1875,677	180,8875	4,951	46,313	3,794										
	150C1F3	0	0	0	0	0	0	0	0	0	0	0	0	0	0										
4	Comp. gl	5821	2728	-49448	5821	2840	49522	11,642	5,568	0,074	1,813	160,2821	11,642	0,074	5,568	4	-10467,7	2112,668	99,965	-293,839	49,552				
Constructi	GW / opgv	2828	1464	-24172	2828	1545	24251	5,656	3,009	0,079	4,53697	177,1054	5,656	0,079	3,009	Wind angle: -45 dgr									
Permanen	380C1F1	19451	9647	-168439	19451	10101	168800	38,902	19,748	0,361	17,689	967,652	38,902	0,361	19,748										
Wind ang	380C1F2	19451	9480	-168322	0	0	0	19,451	9,48	-168,322	-6817,04	383,94	19,451	-168,322	9,48										
	380C1F3	19451	9272	-168189	0	0	0	19,451	9,272	-168,189	-5382,05	296,704	19,451	-168,189	9,272										
	150C1F1	0	0	0	0	0	0	0	0	0	0	0	0	0	0										
	150C1F2	0	0	0	4863	2475	42158	4,863	2,475	42,158	1707,399	126,984	4,863	42,158	2,475										
	150C1F3	0	0	0	0	0	0	0	0	0	0	0	0	0	0										
1a	Comp. gl	3462	1387	-31599	3462	1387	31599	6,924	2,774	0	0	82,1572	6,924	0	2,774	1a	-7288,89	1106,12	64,581	-204,498	25,922				
Wind, 10	GW / opgv	1669	670	-15226	1669	670	15226	3,338	1,34	0	0	79,49308	3,338	0	1,34	Wind angle: 0 dgr									
Permanen	380C1F1	12781	5133	-116856	12781	5133	116856	25,562	10,266	0	0	503,034	25,562	0	10,266										
Wind ang	380C1F2	12781	5131	-116856	0	0	0	12,781	5,131	-116,856	-4732,67	207,8055	12,781	-116,856	5,131										
	380C1F3	12781	5128	-116856	0	0	0	12,781	5,128	-116,856	-3739,39	164,096	12,781	-116,856	5,128										
	150C1F1	0	0	0	0	0	0	0	0	0	0	0	0	0	0										
	150C1F2	0	0	0	3195	1283	29214	3,195	1,283	29,214	1183,167	69,534	3,195	29,214	1,283										
	150C1F3	0	0	0	0	0	0	0	0	0	0	0	0	0	0										
1b	Comp. gl	3461	1577	-36072	3461	1577	36072	6,922	3,154	0	0	91,4631	6,922	0	3,154	1b	-8560,35	1283,874	64,547	-240,17	30,197				
Wind, -20	GW / opgv	1668	769	-17575	1668	769	17575	3,336	1,538	0	0	90,8627	3,336	0	1,538	Wind angle: 0 dgr									
Permanen	380C1F1	12774	6002	-137240	12774	6002	137240	25,548	12,004	0	0	588,196	25,548	0	12,004										
Wind ang	380C1F2	12774	6001	-137240	0	0	0	12,774	6,001	-137,24	-5558,22	243,0405	12,774	-137,24	6,001										
	380C1F3	12774	6000	-137240	0	0	0	12,774	6	-137,24	-4391,68	192	12,774	-137,24	6										
	150C1F1	0	0	0	0	0	0	0	0	0	0	0	0	0	0										
	150C1F2	0	0	0	3193	1500	34310	3,193	1,5	34,31	1389,555	78,3115	3,193	34,31	1,5										
	150C1F3	0	0	0	0	0	0	0	0	0	0	0	0	0	0										
3	Comp. gl	6606	2468	-56251	6606	2468	56251	13,212	4,936	0	0	148,0166	13,212	0	4,936	3	-9168,38	1477,714	85,725	-257,229	34,749				
Wind+ice,	GW / opgv	3238	1216	-27659	3238	1216	27659	6,476	2,432	0	0	144,5915	6,476	0	2,432	Wind angle: 0 dgr									
Permanen	380C1F1	15538	6444	-146988	15538	6444	146988	31,076	12,888	0	0	631,512	31,076	0	12,888										
Wind ang	380C1F2	15538	6442	-146988	0	0	0	15,538	6,442	-146,988	-5953,01	260,901	15,538	-146,988	6,442										
	380C1F3	15538	6440	-146988	0	0	0	15,538	6,44	-146,988	-4703,62	206,08	15,538	-146,988	6,44										
	150C1F1	0	0	0	0	0	0	0	0	0	0	0	0	0	0										
	150C1F2	0	0	0	3885	1611	36747	3,885	1,611	36,747	1488,254	86,613	3,885	36,747	1,611										
	150C1F3	0	0	0	0	0	0	0	0	0	0	0	0	0	0										
4	Comp. gl	4665	1803	-41233	4665	1803	41233	9,33	3,606	0	0	107,4735	9,33	0	3,606	4	-8587,69	1320,199	78,413	-240,937	30,95				
Constructi	GW / opgv	2271	879	-20083	2271	879	20083	4,542	1,758	0	0	104,4139	4,542	0	1,758	Wind angle: 0 dgr									
Permanen	380C1F1	15186	6021	-137677	15186	6021	137677	30,372	12,042	0	0	590,058	30,372	0	12,042										
Wind ang	380C1F2	15186	6020	-137678	0	0	0	15,186	6,02	-137,678	-5575,96	241,81	15,186	-137,678	6,02										
	380C1F3	15186	6019	-137678	0	0	0	15,186	6,019	-137,678	-4405,7	192,608	15,186	-137,678	6,019										
	150C1F1	0	0	0	0	0	0	0	0	0	0	0	0	0	0										
	150C1F2	0	0	0	3797	1505	34419	3,797	1,505	34,419	1393,97	81,836	3,797	34,419	1,505										
	150C1F3	0	0	0	0	0	0	0	0	0	0	0	0	0	0										
6	Comp. gl	3462	1380	-31600	3462	1380	31600	6,924	2,76	0	0	81,8142	6,924	0	2,76	6	-7288,97	1099,874	64,581	-204,5	25,774				
Permanen	GW / opgv	1669	665	-15226	1669	665	15226	3,338	1,33	0	0	78,91878	3,338	0	1,33	0									
Permanen	380C1F1	12781	5102	-116857	12781	5102	116857	25,562	10,204	0	0	499,996	25,562	0	10,204										
	380C1F2	12781	5102	-116857	0	0	0	12,781	5,102	-116,857	-4732,71	206,631	12,781	-116,857	5,102										
	380C1F3	12781	5102	-116857	0	0	0	12,781	5,102	-116,857	-3739,42	163,264	12,781	-116,857	5,102										
	150C1F1	0	0	0	0	0	0	0	0	0	0	0	0	0	0										
	150C1F2	0	0	0	3195	1276	29214	3,195	1,276	29,214	1183,167	69,2505	3,195	29,214	1,276										
	150C1F3	0	0	0	0	0	0	0	0	0	0	0	0	0	0										
1a	Comp. gl	3463	3790	-36327	3463	3379	35022	6,926	7,169	-1,305	-31,9725	189,8388	6,926	-1,305	7,169	1a	-8704,78	2968,647	64,589	-241,398	70,254				
Wind, 10	GW / opgv	1670	2446	-19823	1669	2140	18636	3,339	4,586	-1,187	-68,1694	265,9116	3,339	-1,187	4,586	Wind angle: 45 dgr									
Permanen	380C1F1	12783	14850	-136867	12782	13189	131415	25,565	28,039	-5,452	-267,148	1373,911	25,565	-5,452	28,039										
Wind ang	380C1F2	12782	14113	-134385	0	0	0	12,782	14,113	-134,385	-5442,59	571,5765	12,782	-134,385	14,113										
	380C1F3	12782	13202	-131458	0	0	0	12,782	13,202	-131,458	-4206,66	422,464	12,782	-131,458	13,202										
	150C1F1	0	0	0	0	0	0	0	0	0	0	0	0	0	0										
	150C1F2	0	0	0	3195	3145	32389	3,195	3,145	32,389	1311,755	144,945	3,195	32,389	3,145										
	150C1F3	0	0	0	0	0	0	0	0	0	0	0	0	0	0										
1b	Comp. gl	3461	2275	-36576	3461	2159	36425	6,922	4,434	-0,151	-3,6995	122,8231	6,922	-0,151	4,434	1b	-8716,92	1824,664	64,547	-244,213	43,077				
Wind, -20	GW / opgv	1668	1277	-18122	1668	1192	17961	3,336	2,469	-0,161	-9,24623	144,33	3,336	-0,161	2,469	Wind angle: 45 dgr									
Permanen	380C1F1	12774	8816	-139418	12774	8350	138766	25,548	17,166	-0,652	-31,948	841,134	25,548	-0,652	17,166										
Wind ang	380C1F2	12774	8609	-139116	0	0	0	12,774	8,609	-139,116	-5634,2	348,6645	12,774	-139,116	8,609										
	380C1F3	12774	8354	-138771	0	0	0	12,774	8,354	-138,771	-4440,67	267,328	12,774	-138,771	8,354										
	150C1F1	0	0	0	0	0	0	0	0	0	0	0	0	0	0										
	150C1F2	0	0	0	3193	2045	34638	3,193	2,045	34,638	1402,839	100,384	3,193	34,638	2,045										
	150C1F3	0	0	0	0	0	0	0	0	0	0	0	0	0	0										
3	Comp. gl	6607	6166	-61652	6606	5542	60127	13,213	11,708	-1,525	-37,3625	313,9327	13,213	-1,525	11,708	3	-10109,1	3245,618	85,734	-281,6	77,289				
Wind+ice,	GW / opgv	3239	3937	-32993	3239	3474	31567	6,478	7,411	-1,426	-81,8952	430,537	6,478	-1,426	7,411	Wind angle: 45 dgr									
Permanen	380C1F1	15540	14587	-159465	15539	13210	155921	31,079	27,797	-3,544	-173,656	1362,053	31,079	-3,544	27,797										
Wind ang	380C1F2	15540	13976	-157840	0	0	0	15,54	13,976	-157,84	-6392,52	566,028	15,54	-157,84	13,976										
	380C1F3	15539	13221	-155949	0	0	0	15,539	13,221	-155,949	-4990,37	423,072	15,539	-155,949	13,221										
	150C1F1	0	0	0	0	0	0	0	0	0	0	0	0	0	0										
	150C1F2	0	0	0	3885	3176	38684	3,885	3,176	38,684	1566,702	149,9955	3,885	38,684	3,176										
	150C1F3	0	0	0	0	0	0	0	0	0	0	0	0	0	0										
4	Comp. gl	4665	2492	-41555	4665	2379	41456	9,33	4,871	-0,099	-2,4255	138,466	9,33	-0,099	4,871	4	-8704,87	1856,576	78,413	-243,963	43,726				
Constructi	GW / opgv	2271	1378	-20433	2271	1296	20328	4,542	2,674	-0,105	-6,03015	157,0197	4,542	-0,105	2,674	Wind angle: 45 dgr									
Permanen	380C1F1	15186	8813	-139326	15186	8354	138827	30,372	17,167	-0,499	-24,451	841,183	30,372	-0,499	17,167										
Wind ang	380C1F2	15186	8610	-139095	0	0	0	15,186	8,61	-139,095	-5633,35	348,705	15,186	-139,095	8,61										
	380C1F3	15186	8358	-138831	0	0	0	15,186	8,358	-138,831	-4442,59	267,456	15,186	-138,831	8,358										
	150C1F1	0	0	0	0	0	0	0	0	0	0	0	0	0	0										
	150C1F2	0	0	0	3797	2046	34666	3,797	2,046	34,666	1403,973	103,7465	3,797	34,666	2,046										
	150C1F3	0	0	0	0	0	0	0	0	0	0	0	0	0	0										
1a	Comp. gl	3463	6009	-44934	3463	6009	44934	6,926	12,018	0	0	308,6393	6,926	0	12,018	1a	-10125,6	4923,931	64,604	-283,349	116,411				
Wind, 10	GW / opgv	1670	4076	-26872	1670	4076	26872	3,34	8,152	0	0	470,7078	3,34	0	8,152	Wind angle: 90 dgr									
Permanen	380C1F1	12786	23805	-171934	12786	23805	171934	25,572	47,61	0	0	2332,89	25,572	0	47,61										
Wind ang	380C1F2	12785	22393	-166026	0	0	0	12,785	22,393	-166,026	-6724,05	906,9165	12,785	-166,026	22,393										
	380C1F3	12785	20640	-158830	0	0	0	12,785	20,64	-158,83	-5082,56	660,48	12,785	-158,83	20,64										
	150C1F1	0	0	0	0	0	0	0	0	0	0	0	0	0	0										
	150C1F2	0	0	0	3196	5598	41507	3,196	5,598	41,507	1681,034	244,297	3,196	41,507	5,598										
	150C1F3	0	0	0	0	0	0	0	0	0	0	0	0	0	0										
1b	Comp. gl	3461	2893	-37768	3461	2893	37768	6,922	5,786	0	0	155,9471	6,922	0	5,786	1b	-8917,78	2371,734	64,552	-250,084	55,986				
Wind, -20	GW / opgv	1669	1737	-19345	1669	1737	19345	3,338	3,474	0	0	202,0487	3,338	0	3,474	Wind angle: 90 dgr									
Permanen	380C1F1	12775	11320	-144512	12775	11320	144512	25,55	22,64	0	0	1109,36	25,55	0	22,64										
Wind ang	380C1F2	12774	10923	-143544	0	0	0	12,774	10,923	-143,544	-5813,53	442,3815	12,774	-143,544	10,923										
	380C1F3	12774	10432	-142426	0	0	0	12,774	10,432	-142,426	-4557,63	333,824	12,774	-142,426	10,432										
	150C1F1	0	0	0	0	0	0	0	0	0	0	0	0	0	0										
	150C1F2	0	0	0	3194	2731	35886	3,194	2,731	35,886	1453,383	128,1725	3,194	35,886	2,731										
	150C1F3	0	0	0	0	0	0	0	0	0	0	0	0	0	0										
3	Comp. gl	6608	9529	-72110	6608	9529	72110	13,216	19,058	0	0	494,0138	13,216	0	19,058	3	-11047,9	5093,955	85,753	-309,428	121,444				
Wind+ice,	GW / opgv	3241	6414	-41862	3241	6414	41862	6,482	12,828	0	0	741,6384	6,482	0	12,828	Wind angle: 90 dgr									
Permanen	380C1F1	15543	22042	-184145	15543	22042	184145	31,086	44,084	0	0	2160,116	31,086	0	44,084										
Wind ang	380C1F2	15542	20861	-179791	0	0	0	15,542	20,861	-179,791	-7281,54	844,8705	15,542	-179,791	20,861										
	380C1F3	15541	19398	-174585	0	0	0	15,541	19,398	-174,585	-5586,72	620,736	15,541	-174,585	19,398										
	150C1F1	0	0	0	0	0	0	0	0	0	0	0	0	0	0										
	150C1F2	0	0	0	3886	5215	44948	3,886	5,215	44,948	1820,394	232,5805	3,886	44,948	5,215										
	150C1F3	0	0	0	0	0	0	0	0	0	0	0	0	0	0										

4	Comp. gl	4665	3094	-42346	4665	3094	42346	9,33	6,188	0	0	170,7325	9,33	0	6,188	4	-8861,93	2392,262	78,417	-248,542	56,37
Constructi	GW / opg	2271	1821	-21255	2271	1821	21255	4,542	3,642	0	0	212,612	4,542	0	3,642	Wind angle:	90 dgr				
Permaner	380C1F1	15187	11269	-143280	15187	11269	143280	30,374	22,538	0	0	1104,362	30,374	0	22,538						
Wind angl	380C1F2	15187	10881	-142523	0	0	0	15,187	10,881	-142,523	-5772,18	440,6805	15,187	-142,523	10,881						
	380C1F3	15187	10401	-141650	0	0	0	15,187	10,401	-141,65	-4532,8	332,832	15,187	-141,65	10,401						
	150C1F1	0	0	0	0	0	0	0	0	0	0	0	0	0	0						
	150C1F2	0	0	0	3797	2720	35631	3,797	2,72	35,631	1443,056	131,0435	3,797	35,631	2,72						
	150C1F3	0	0	0	0	0	0	0	0	0	0	0	0	0	0						
1a	Comp. gl	3463	3379	-35022	3463	3790	36327	6,926	7,169	1,305	31,9725	189,8388	6,926	1,305	7,169	1a	-7595,46	2878,109	64,59	-215,402	67,73
Wind, 10 (	GW / opg	1669	2140	-18636	1670	2446	19823	3,339	4,586	1,187	68,16941	265,9116	3,339	1,187	4,586	Wind angle:	-45 dgr				
Permaner	380C1F1	12782	13189	-131415	12783	14850	136867	25,565	28,039	5,452	267,148	1373,911	25,565	5,452	28,039						
Wind angl	380C1F2	12782	12580	-129558	0	0	0	12,782	12,58	-129,558	-5247,1	509,49	12,782	-129,558	12,58						
	380C1F3	12782	11828	-127384	0	0	0	12,782	11,828	-127,384	-4076,29	378,496	12,782	-127,384	11,828						
	150C1F1	0	0	0	0	0	0	0	0	0	0	0	0	0	0						
	150C1F2	0	0	0	3196	3528	33596	3,196	3,528	33,596	1360,638	160,462	3,196	33,596	3,528						
	150C1F3	0	0	0	0	0	0	0	0	0	0	0	0	0	0						
1b	Comp. gl	3461	2159	-36425	3461	2275	36576	6,922	4,434	0,151	3,6995	122,8231	6,922	0,151	4,434	1b	-8583,87	1799,131	64,548	-241,12	42,365
Wind, -20	GW / opg	1668	1192	-17961	1668	1277	18122	3,336	2,469	0,161	9,24623	144,33	3,336	0,161	2,469	Wind angle:	-45 dgr				
Permaner	380C1F1	12774	8350	-138766	12774	8816	139418	25,548	17,166	0,652	31,948	841,134	25,548	0,652	17,166						
Wind angl	380C1F2	12774	8178	-138553	0	0	0	12,774	8,178	-138,553	-5611,4	331,209	12,774	-138,553	8,178						
	380C1F3	12774	7966	-138310	0	0	0	12,774	7,966	-138,31	-4425,92	254,912	12,774	-138,31	7,966						
	150C1F1	0	0	0	0	0	0	0	0	0	0	0	0	0	0						
	150C1F2	0	0	0	3194	2152	34779	3,194	2,152	34,779	1408,55	104,723	3,194	34,779	2,152						
	150C1F3	0	0	0	0	0	0	0	0	0	0	0	0	0	0						
3	Comp. gl	6606	5542	-60127	6607	6166	61652	13,213	11,708	1,525	37,3625	313,9327	13,213	1,525	11,708	3	-9283,41	3170,51	85,733	-262,145	75,195
Wind+ice,	GW / opg	3239	3474	-31567	3239	3937	32993	6,478	7,411	1,426	81,89518	430,537	6,478	1,426	7,411	Wind angle:	-45 dgr				
Permaner	380C1F1	15539	13210	-155921	15540	14587	159465	31,079	27,797	3,544	173,656	1362,053	31,079	3,544	27,797						
Wind angl	380C1F2	15539	12705	-154736	0	0	0	15,539	12,705	-154,736	-6266,81	514,5525	15,539	-154,736	12,705						
0	380C1F3	15539	12080	-153364	0	0	0	15,539	12,08	-153,364	-4907,65	386,56	15,539	-153,364	12,08						
	150C1F1	0	0	0	0	0	0	0	0	0	0	0	0	0	0						
	150C1F2	0	0	0	3885	3494	39460	3,885	3,494	39,46	1598,13	162,8745	3,885	39,46	3,494						
	150C1F3	0	0	0	0	0	0	0	0	0	0	0	0	0	0						
4	Comp. gl	4665	2379	-41456	4665	2492	41555	9,33	4,871	0,099	2,4255	138,466	9,33	0,099	4,871	4	-8606,01	1831,328	78,413	-241,667	43,022
Constructi	GW / opg	2271	1296	-20328	2271	1378	20433	4,542	2,674	0,105	6,03015	157,0197	4,542	0,105	2,674	Wind angle:	-45 dgr				
Permaner	380C1F1	15186	8354	-138827	15186	8813	139326	30,372	17,167	0,499	24,451	841,183	30,372	0,499	17,167						
Wind angl	380C1F2	15186	8184	-138665	0	0	0	15,186	8,184	-138,665	-5615,93	331,452	15,186	-138,665	8,184						
	380C1F3	15186	7974	-138479	0	0	0	15,186	7,974	-138,479	-4431,33	255,168	15,186	-138,479	7,974						
	150C1F1	0	0	0	0	0	0	0	0	0	0	0	0	0	0						
	150C1F2	0	0	0	3797	2152	34774	3,797	2,152	34,774	1408,347	108,0395	3,797	34,774	2,152						
	150C1F3	0	0	0	0	0	0	0	0	0	0	0	0	0	0						

W4H400ZA 25 - AK2

Hoogte mast	Ber & bijlage	58	m		
Hoogte onderste stroomdraad (F3)		32	m		
		Hoogte		Excentriciteit ophanging t.o.v. hart mast	
Bliksemdraad = GW / CH_{mast} -	0,57 m =	57,43	m	0,76	m
1e traverse - 380C1F1 F2 +	8,5 m =	49	m	0	m
1e traverse - 150C1F1		49		5,5	m
2e traverse - 380C1F2 F3 +	8,5 m =	40,5	m	0	m
2e traverse - 150C1F2 F3 +		40,5	m	5,5	m
3e traverse - 380C1F3		32	m	0	m
3e traverse - 150C1F3		32		5,5	m
Passieve lijn = Comp C. F3 -	7,5 m =	24,5	m	2,05	m

Uit mast			Uit lijnen					
ULS (incl bel factoren)			SLS					
N	V	M	Nmin	Nmax	Vmax	Mlangs;ma	Mdwars;max	
[kN]	[kN]	[kNm]	[kN]	[kN]	[kN]	[kNm]	[kNm]	
857	115	3123						
857	115	3123	107	191	212	6398	8686	

			Belastingen uit lijnen					Belasting uit mast		
			M_{langs}	M_{dwars}	N	V_{langs}	V_{dwars}	N	V	M
SLS	0 deg	1a	3871	1767	107	96	42	714	77	2082
		1b	4508	2031	107	111	49	714	77	2082
		3	5917	2928	191	146	70	714	77	2082
		4	4406	2019	124	109	48	714	77	2082
	45 deg	1a	3478	5036	107	86	123	714	77	2082
		1b	4482	2639	107	111	64	714	77	2082
		3	5807	4809	191	143	116	714	77	2082
		4	4385	2624	124	108	63	714	77	2082
	90 deg	1a	5894	8686	107	145	212	714	77	2082
		1b	4627	3285	107	114	80	714	77	2082
		3	6398	6829	191	158	166	714	77	2082
		4	4501	3263	124	111	79	714	77	2082
	-45 deg	1a	5565	5097	107	137	124	714	77	2082
		1b	4593	2650	107	113	64	714	77	2082
		3	6277	4839	191	155	117	714	77	2082
		4	4472	2635	124	110	63	714	77	2082

				Totaal											
regel			Loadcase	M_{langs}	M_{dwars}	N	V_{langs}	V_{dwars}	Totaal moment	M langs max	M dwars ma	N max	V langs max	V dwars ma	M tot max	N min
1	Perm load 1,2	0 deg	1a	5953	3849	821	172	119	7088,726							
2	Perm load 1,2	0 deg	1b	6590	4113	821	188	126	7768,166							x
3	Perm load 1,2	0 deg	3	7999	5010	905	223	147	9438,446							
4	Perm load 1,2	0 deg	4	6488	4101	838	185	125	7674,849							
5																
6	Perm load 1,2	45 deg	1a	5560	7118	821	163	199	9032,163							
7	Perm load 1,2	45 deg	1b	6564	4721	821	187	141	8085,53							x
8	Perm load 1,2	45 deg	3	7889	6891	905	220	193	10474,23							
9	Perm load 1,2	45 deg	4	6467	4706	838	185	140	7998,443							
10																
11	Perm load 1,2	90 deg	1a	7976	10768	821	221	289	13400,65	11	x		x	x		
12	Perm load 1,2	90 deg	1b	6709	5367	821	191	156	8591,462	12						
13	Perm load 1,2	90 deg	3	8480	8911	905	234	243	12301,29	13	x	x	x			
14	Perm load 1,2	90 deg	4 Construct	6583	5345	838	188	156	8479,637	14						
15										15						
16	Perm load 1,2	-45 deg	1a	7038	7179	821	213	201	10052,9	16						
17	Perm load 1,2	-45 deg	1b	6065	4732	821	190	141	7692,094	17						x
18	Perm load 1,2	-45 deg	3	7749	6921	905	231	194	10390,18	18						
19	Perm load 1,2	-45 deg	4	5944	4717	838	187	140	7588,643	19						
				8480	10768	905	234	289	13401							
						821										

samenvatting

	Mast	Bijlage	Wind	Loadcase	M_{langs}	M_{dwars}	N	V_{langs}	V_{dwars}
2	W4H400ZA 25-AK2	Perm load :0 deg	1b		6590	4113	821	188	126
7	W4H400ZA 25-AK2	Perm load :45 deg	1b		6564	4721	821	187	141
11	W4H400ZA 25-AK2	Perm load :90 deg	1a		7976	10768	821	221	289
13	W4H400ZA 25-AK2	Perm load :90 deg		3	8480	8911	905	234	243
17	W4H400ZA 25-AK2	Perm load :-45 deg	1b		6065	4732	821	190	141
	W4H400ZA 25-AK2	#N/B	#N/B	#N/B	#N/B	#N/B	#N/B	#N/B	#N/B

W4H400ZA+5 (Aftak m ast 34 en 106) (rev 8.0, date: 23-11-20 APPENDIX: AK2
Loadcases for tower strength (serviceabilitylimit state)
Loadcase according to 50341-3-15

		AHEAD			BACK		Totaal			Belastingen op mastvoet, per lijn					Belasting op mastvoet, belastinggeval					
		[N]	[N]	[N]	[N]	[N]	Vert	Dwars	Langs	M_{langs}	M_{dwars}	N	V_{langs}	V_{dwars}		M_{langs}	M_{dwars}	N	V_{langs}	V_{dwars}
	Attachment point						[kN]	[kN]	[kN]											
1a	Comp. gl	3847	1517	34520	3847	1517	-34520	7,694	3,034	0	0	90,1057	7,694	0	3,034	1a	3870,747	1767,006	107,266	95,574	42,306
Wind, 10 c	GW / opgv	1855	734	16643	1855	734	-16643	3,71	1,468	0	0	87,12684	3,71	0	1,468	Wind angle: 0 dgr					
Permanen	380C1F1 /	14202	5604	127432	14202	5604	-127432	28,404	11,208	0	0	549,192	28,404	0	11,208						
Wind ang	380C1F2 /	14202	5601	127432	14202	5601	-127432	28,404	11,202	0	0	453,681	28,404	0	11,202						
	380C1F3 /	14202	5597	127433	14202	5597	-127433	28,404	11,194	0	0	358,208	28,404	0	11,194						
	150C1F1 /	3550	1401	31858	0	0	0	3,55	1,401	31,858	1561,042	88,174	3,55	31,858	1,401						
	150C1F2 /	3550	1400	31858	0	0	0	3,55	1,4	31,858	1290,249	76,225	3,55	31,858	1,4						
	150C1F3 /	3550	1399	31858	0	0	0	3,55	1,399	31,858	1019,456	64,293	3,55	31,858	1,399						
1b	Comp. gl	3845	1712	39161	3845	1712	-39161	7,69	3,424	0	0	99,6525	7,69	0	3,424	1b	4508,258	2030,53	107,209	111,315	48,886
Wind, -20	GW / opgv	1854	835	19082	1854	835	-19082	3,708	1,67	0	0	98,72618	3,708	0	1,67	Wind angle: 0 dgr					
Permanen	380C1F1 /	14194	6488	148419	14194	6488	-148419	28,388	12,976	0	0	635,824	28,388	0	12,976						
Wind ang	380C1F2 /	14194	6488	148419	14194	6488	-148419	28,388	12,976	0	0	525,528	28,388	0	12,976						
	380C1F3 /	14194	6487	148419	14194	6487	-148419	28,388	12,974	0	0	415,168	28,388	0	12,974						
	150C1F1 /	3549	1622	37105	0	0	0	3,549	1,622	37,105	1818,145	98,9975	3,549	37,105	1,622						
	150C1F2 /	3549	1622	37105	0	0	0	3,549	1,622	37,105	1502,753	85,2105	3,549	37,105	1,622						
	150C1F3 /	3549	1622	37105	0	0	0	3,549	1,622	37,105	1187,36	71,4235	3,549	37,105	1,622						
3	Comp. gl	13213	4160	95056	13213	4160	-95056	26,426	8,32	0	0	258,0133	26,426	0	8,32	3	5916,929	2928,131	190,815	146,097	69,994
Wind+ice,	GW / opgv	6530	2063	47087	6530	2063	-47087	13,06	4,126	0	0	246,8818	13,06	0	4,126	Wind angle: 0 dgr					
Permanen	380C1F1 /	22419	8527	194794	22419	8527	-194794	44,838	17,054	0	0	835,646	44,838	0	17,054						
Wind ang	380C1F2 /	22419	8526	194794	22419	8526	-194794	44,838	17,052	0	0	690,606	44,838	0	17,052						
	380C1F3 /	22419	8524	194794	22419	8524	-194794	44,838	17,048	0	0	545,536	44,838	0	17,048						
	150C1F1 /	5605	2132	48699	0	0	0	5,605	2,132	48,699	2386,251	135,2955	5,605	48,699	2,132						
	150C1F2 /	5605	2131	48699	0	0	0	5,605	2,131	48,699	1972,31	117,133	5,605	48,699	2,131						
	150C1F3 /	5605	2131	48699	0	0	0	5,605	2,131	48,699	1558,368	99,0195	5,605	48,699	2,131						
4	Comp. gl	4850	1860	42552	4850	1860	-42552	9,7	3,72	0	0	111,025	9,7	0	3,72	4	4405,59	2018,546	123,804	108,78	48,323
Constructi	GW / opgv	2356	905	20697	2356	905	-20697	4,712	1,81	0	0	107,5294	4,712	0	1,81	Wind angle: 0 dgr					
Permanen	380C1F1 /	16206	6340	145038	16206	6340	-145038	32,412	12,68	0	0	621,32	32,412	0	12,68						
Wind ang	380C1F2 /	16206	6340	145038	16206	6340	-145038	32,412	12,68	0	0	513,54	32,412	0	12,68						
	380C1F3 /	16206	6339	145038	16206	6339	-145038	32,412	12,678	0	0	405,696	32,412	0	12,678						
	150C1F1 /	4052	1585	36260	0	0	0	4,052	1,585	36,26	1776,74	99,951	4,052	36,26	1,585						
	150C1F2 /	4052	1585	36260	0	0	0	4,052	1,585	36,26	1468,53	86,4785	4,052	36,26	1,585						
	150C1F3 /	4052	1585	36260	0	0	0	4,052	1,585	36,26	1160,32	73,006	4,052	36,26	1,585						
1a	Comp. gl	3848	4090	39347	3848	4621	-41134	7,696	8,711	-1,787	-43,7815	229,1963	7,696	-1,787	8,711	1a	3478,059	5035,986	107,284	85,915	122,605
Wind, 10 c	GW / opgv	1855	2634	21359	1855	3027	-22930	3,71	5,661	-1,571	-90,2225	327,9308	3,71	-1,571	5,661	Wind angle: 45 dgr					
Permanen	380C1F1 /	14204	16009	147845	14205	18157	-155243	28,409	34,166	-7,398	-362,502	1674,134	28,409	-7,398	34,166						
Wind ang	380C1F2 /	14204	15221	145299	14204	17204	-151888	28,408	32,425	-6,589	-266,855	1313,213	28,408	-6,589	32,425						
	380C1F3 /	14204	14247	142302	14204	16026	-147903	28,408	30,273	-5,601	-179,232	968,736	28,408	-5,601	30,273						
	150C1F1 /	3551	4002	36961	0	0	0	3,551	4,002	36,961	1811,089	215,6285	3,551	36,961	4,002						
	150C1F2 /	3551	3805	36325	0	0	0	3,551	3,805	36,325	1471,163	171,633	3,551	36,325	3,805						
	150C1F3 /	3551	3562	35575	0	0	0	3,551	3,562	35,575	1138,4	133,5145	3,551	35,575	3,562						
1b	Comp. gl	3845	2193	39370	3845	2288	-39461	7,69	4,481	-0,091	-2,2295	125,549	7,69	-0,091	4,481	1b	4482,366	2638,688	107,209	110,691	63,838
Wind, -20	GW / opgv	1854	1183	19314	1854	1252	-19413	3,708	2,435	-0,099	-5,68557	142,6601	3,708	-0,099	2,435	Wind angle: 45 dgr					
Permanen	380C1F1 /	14194	8429	149324	14194	8811	-149718	28,388	17,24	-0,394	-19,306	844,76	28,388	-0,394	17,24						
Wind ang	380C1F2 /	14194	8288	149196	14194	8642	-149535	28,388	16,93	-0,339	-13,7295	685,665	28,388	-0,339	16,93						
	380C1F3 /	14194	8113	149049	14194	8432	-149327	28,388	16,545	-0,278	-8,896	529,44	28,388	-0,278	16,545						
	150C1F1 /	3549	2107	37331	0	0	0	3,549	2,107	37,331	1829,219	122,7625	3,549	37,331	2,107						
	150C1F2 /	3549	2072	37299	0	0	0	3,549	2,072	37,299	1510,61	103,4355	3,549	37,299	2,072						
	150C1F3 /	3549	2028	37262	0	0	0	3,549	2,028	37,262	1192,384	84,4155	3,549	37,262	2,028						
3	Comp. gl	13213	6630	96129	13214	7115	-96595	26,427	13,745	-0,466	-11,417	390,9279	26,427	-0,466	13,745	3	5806,519	4808,624	190,817	143,426	116,462
Wind+ice,	GW / opgv	6530	3854	48234	6531	4209	-48715	13,061	8,063	-0,481	-27,6238	472,9845	13,061	-0,481	8,063	Wind angle: 45 dgr					
Permanen	380C1F1 /	22419	14011	198669	22419	15101	-200300	44,838	29,112	-1,631	-79,919	1426,488	44,838	-1,631	29,112						
Wind ang	380C1F2 /	22419	13609	198133	22419	14618	-199547	44,838	28,227	-1,414	-57,267	1143,194	44,838	-1,414	28,227						
	380C1F3 /	22419	13112	197519	22419	14020	-198681	44,838	27,132	-1,162	-37,184	868,224	44,838	-1,162	27,132						
	150C1F1 /	5605	3503	49667	0	0	0	5,605	3,503	49,667	2433,683	202,4745	5,605	49,667	3,503						
	150C1F2 /	5605	3402	49533	0	0	0	5,605	3,402	49,533	2006,087	168,6085	5,605	49,533	3,402						
	150C1F3 /	5605	3278	49380	0	0	0	5,605	3,278	49,38	1580,16	135,7235	5,605	49,38	3,278						
4	Comp. gl	4850	2339	42696	4850	2432	-42761	9,7	4,771	-0,065	-1,5925	136,7745	9,7	-0,065	4,771	4	4385,219	2624,396	123,804	108,289	63,219
Constructi	GW / opgv	2356	1251	20857	2356	1319	-20927	4,712	2,57	-0,07	-4,0201	151,1762	4,712	-0,07	2,57	Wind angle: 45 dgr					
Permanen	380C1F1 /	16206	8274	145756	16206	8653	-146073	32,412	16,927	-0,317	-15,533	829,423	32,412	-0,317	16,927						
Wind ang	380C1F2 /	16206	8135	145653	16206	8485	-145926	32,412	16,62	-0,273	-11,0565	673,11	32,412	-0,273	16,62						
	380C1F3 /	16206	7961	145536	16206	8277	-145758	32,412	16,238	-0,222	-7,104	519,616	32,412	-0,222	16,238						
	150C1F1 /	4052	2069	36439	0	0	0	4,052	2,069	36,439	1785,511	123,667	4,052	36,439	2,069						
	150C1F2 /	4052	2034	36413	0	0	0	4,052	2,034	36,413	1474,727	104,663	4,052	36,413	2,034						
	150C1F3 /	4052	1990	36384	0	0	0	4,052	1,99	36,384	1164,288	85,966	4,052	36,384	1,99						
1a	Comp. gl	3849	7480	52478	3849	7480	-52478	7,698	14,96	0	0	382,3009	7,698	0	14,96	1a	5894,074	8686,46	107,32	144,651	212,291
Wind, 10 c	GW / opgv	1856	5115	31900	1856	5115	-31900	3,712	10,23	0	0	590,33	3,712	0	10,23	Wind angle: 90 dgr					
Permanen	380C1F1 /	14210	29675	200983	14210	29675	-200983	28,42	59,35	0	0	2908,15	28,42	0	59,35						
Wind ang	380C1F2 /	14209	27865	193442	14209	27865	-193442	28,418	55,73	0	0	2257,065	28,418	0	55,73						
	380C1F3 /	14208	25616	184181	14208	25616	-184181	28,416	51,232	0	0	1639,424	28,416	0	51,232						
	150C1F1 /	3552	7419	50246	0	0	0	3,552	7,419	50,246	2462,054	383,067	3,552	50,246	7,419						
	150C1F2 /	3552	6966	48360	0	0	0	3,552	6,966	48,36	1958,58	301,659	3,552	48,36	6,966						
	150C1F3 /	3552	6404	46045	0	0	0	3,552	6,404	46,045	1473,44	224,464	3,552	46,045	6,404						
1b	Comp. gl	3846	2792	40194	3846	2792	-40194	7,692	5,584	0	0	152,5766	7,692	0	5,584	1b	4626,558	3285,352	107,217	114,168	79,722
Wind, -20	GW / opgv	1854	1625	20184	1854	1625	-20184	3,708	3,25	0	0	189,4656	3,708	0	3,25	Wind angle: 90 dgr					
Permanen	380C1F1 /	14195	10850	152858	14195	10850	-152858	28,39	21,7	0	0	1063,3	28,39	0	21,7						
Wind ang	380C1F2 /	14195	10527	152254	14195	10527	-152254	28,39	21,054	0	0	852,687	28,39	0	21,054						
	380C1F3 /	14195	10129	151560	14195	10129	-151560	28,39	20,258	0	0	648,256	28,39	0	20,258						
	150C1F1 /	3549	2712	38214	0	0	0	3,549	2,712	38,214	1872,486	152,4075	3,549	38,214	2,712						
	150C1F2 /	3549	2632	38064	0	0	0	3,549	2,632	38,064	1541,592	126,1155	3,549	38,064	2,632						
	150C1F3 /	3549	2532	37890	0	0	0	3,549	2,532	37,89	1212,48	100,5435	3,549	37,89	2,532						
3	Comp. gl	13215	9698	100246	13215	9698	-100246	26,43	19,396	0	0	529,3835	26,43	0	19,396	3	6398,142	6829,166	190,835	157,715	166,331
Wind+ice,	GW / opgv	6532	6108	52333	6532	6108	-52333	13,064	12,216	0	0	711,4935	13,064	0	12,216	Wind angle: 90 dgr					
Permanen	380C1F1 /	22421	20959	212738	22421	20959	-212738	44,842	41,918	0	0	2053,982	44,842	0	41,918						
Wind ang	380C1F2 /	22421	20032	210416	22421	20032	-210416	44,842	40,064	0	0	1622,592	44,842	0	40,064						
	380C1F3 /	22421	18884	207708	22421	18884	-207708	44,842	37,768	0	0	1208,576	44,842	0	37,768						
	150C1F1 /	5605	5240	53184	0	0	0	5,605	5,24	53,184	2606,016	287,5875	5,605	53,184	5,24						
	150C1F2 /	5605	5008	52604	0	0	0	5,605	5,008	52,604	2130,462	233,6515	5,605	52,604	5,008						
	150C1F3 /	5605	4721	51927	0	0	0	5,605	4,721	51,927	1661,664	181,8995	5,605	51,927	4,721						
4	Comp. gl	4850	2927	43285	4850	2927	-43285	9,7	5,854	0	0	163,308	9,7	0	5,854	4	4500,993	3262,946	123,81	111,08	78,907
Constructi	GW / opgv	2356	1682	21480	2356	1682	-21480	4,712	3,364	0	0	196,7756	4,712	0	3,364	Wind angle: 90 dgr					
Permanen	380C1F1 /	16207	10667	148624	16207	10667	-148624	32,414	21,334	0	0	1045,366	32,414	0	21,334						
Wind ang	380C1F2 /	16207	10350	148131	16207	10350	-148131	32,414	20,7	0	0	838,35	32,414	0	20,7						
	380C1F3 /	16207	9956	147566	16207	9956	-147566	32,414	19,912	0	0	637,184	32,414	0	19,912						
	150C1F1 /	4052	2667	37156	0	0	0	4,052	2,667	37,156	1820,644	152,969	4,052	37,156	2,667						
	150C1F2 /	4052	2587	37033	0	0	0	4,052	2,587	37,033	1499,837	127,0595	4,052	37,033	2,587						
	150C1F3 /	4052	2489	36891	0	0	0	4,052	2,489	36,891	1180,512	101,934	4,052	36,891	2,489						
1a	Comp. gl	3848	4621	41134	3848	4090	-39347	7,696	8,711	1,787	43,7815	229,1963	7,696	1,787	8,711	1a	5565,43	5096,627	107,284	136,705	124,083
Wind, 10 c	GW / opgv	1855	3027	22930	1855	2634	-21359	3,71	5,661	1,571	90,22253	327,9308	3,71	1,571	5,661	Wind angle: -45 dgr					
Permanen	380C1F1 /	14205	18157	155243	14204	16009	-147845	28,409	34,166	7,398	362,502	1674,134	28,409	7,398	34,166						
Wind ang	380C1F2 /	14204	17204	151888	14204	15221	-145299	28,408	32,425	6,589	266,8545	1313,213	28,408	6,589	32,425						
	380C1F3 /	14204	16026	147903	14204	14247	-142302	28,408	30,273	5,601	179,232	968,736	28,408	5,601	30,273						
	150C1F1 /	3551	4539	38811	0	0	0	3,551	4,539	38,811	1901,739	241,9415	3,551	38,811	4,539						
	150C1F2 /	3551	4301	37972	0	0	0	3,551	4,301	37,972	1537,866	193,721	3,551	37,972	4,301						
	150C1F3 /	3551	4007	36976	0	0	0	3,551	4,007	36,976	1183,232	147,7545	3,551	36,976	4,007						
1b	Comp. gl	3845	2288	39461	3845	2193	-39370	7,69	4,481	0,091	2,2295	125,549	7,69	0,091	4,481	1b	4592,544	2649,516	107,209	113,346	64,102
Wind, -20	GW / opgv	1854	1252	19413	1854	1183	-19314	3,708	2,435	0,099	5,68557	142,6601	3,708	0,099	2,435	Wind angle: -45 dgr					

Permanen	380C1F1 / 14194	8811	149718	14194	8429	-149324	28,388	17,24	0,394	19,306	844,76	28,388	0,394	17,24										
Wind angl	380C1F2 / 14194	8642	149535	14194	8288	-149196	28,388	16,93	0,339	13,7295	685,665	28,388	0,339	16,93										
	380C1F3 / 14194	8432	149327	14194	8113	-149049	28,388	16,545	0,278	8,896	529,44	28,388	0,278	16,545										
	150C1F1 / 3549	2203	37429	0	0	0	3,549	2,203	37,429	1834,021	127,4665	3,549	37,429	2,203										
	150C1F2 / 3549	2160	37384	0	0	0	3,549	2,16	37,384	1514,052	106,9995	3,549	37,384	2,16										
	150C1F3 / 3549	2108	37332	0	0	0	3,549	2,108	37,332	1194,624	86,9755	3,549	37,332	2,108										
3	Comp. gl 13214	7115	96595	13213	6630	-96129	26,427	13,745	0,466	11,417	390,9279	26,427	0,466	13,745							3	6276,949	4839,463	190,817	154,786	117,214
Wind+ice,	GW / opgv6531	4209	48715	6530	3854	-48234	13,061	8,063	0,481	27,62383	472,9845	13,061	0,481	8,063							Wind angle: -45 dgr					
Permanen	380C1F1 / 22419	15101	200300	22419	14011	-198669	44,838	29,112	1,631	79,919	1426,488	44,838	1,631	29,112										
Wind angl	380C1F2 / 22419	14618	199547	22419	13609	-198133	44,838	28,227	1,414	57,267	1143,194	44,838	1,414	28,227										
0	380C1F3 / 22419	14020	198681	22419	13112	-197519	44,838	27,132	1,162	37,184	868,224	44,838	1,162	27,132										
	150C1F1 / 5605	3775	50075	0	0	0	5,605	3,775	50,075	2453,675	215,8025	5,605	50,075	3,775										
	150C1F2 / 5605	3655	49887	0	0	0	5,605	3,655	49,887	2020,424	178,855	5,605	49,887	3,655										
	150C1F3 / 5605	3505	49670	0	0	0	5,605	3,505	49,67	1589,44	142,9875	5,605	49,67	3,505										
4	Comp. gl 4850	2432	42761	4850	2339	-42696	9,7	4,771	0,065	1,5925	136,7745	9,7	0,065	4,771							4	4472,289	2635,053	123,804	110,387	63,479
Constructi	GW / opgv2356	1319	20927	2356	1251	-20857	4,712	2,57	0,07	4,0201	151,1762	4,712	0,07	2,57							Wind angle: -45 dgr					
Permanen	380C1F1 / 16206	8653	146073	16206	8274	-145756	32,412	16,927	0,317	15,533	829,423	32,412	0,317	16,927										
Wind angl	380C1F2 / 16206	8485	145926	16206	8135	-145653	32,412	16,62	0,273	11,0565	673,11	32,412	0,273	16,62										
	380C1F3 / 16206	8277	145758	16206	7961	-145536	32,412	16,238	0,222	7,104	519,616	32,412	0,222	16,238										
	150C1F1 / 4052	2163	36518	0	0	0	4,052	2,163	36,518	1789,382	128,273	4,052	36,518	2,163										
	150C1F2 / 4052	2121	36482	0	0	0	4,052	2,121	36,482	1477,521	108,1865	4,052	36,482	2,121										
	150C1F3 / 4052	2069	36440	0	0	0	4,052	2,069	36,44	1166,08	88,494	4,052	36,44	2,069										

W4H400Z26 - AL

Hoogte mast	Ber & bijlage	63 m		
Hoogte onderste stroomdraad (F3)		37 m		
		Hoogte	Excentriciteit ophanging t.o.v. hart mast	
Bliksemdraad = GW / tH_{max} -	0,57 m =	62,43 m	0,76 m	
1e traverse - 380C1F1 F2 +	8,5 m =	54 m	0 m	
1e traverse - 150C1F1		54	5,5 m	
2e traverse - 380C1F2 F3 +	8,5 m =	45,5 m	0 m	
2e traverse - 150C1F2 F3 +		45,5 m	5,5 m	
3e traverse - 380C1F3		37 m	0 m	
3e traverse - 150C1F3		37	5,5 m	
Passieve lijn = Comp C F3 -	7,5 m =	29,5 m	2,119 m	

Uit mast (excl belastingsfactoren) N [kN]	V [kN]	M [kNm]	Uit lijnen (incl belastingsfactoren) Nmin [kN]	Nmax [kN]	Vmax [kN]	Mlangs;ma [kNm]	Mdwars;max [kNm]
967	131	3839	80	223	951	43362	20007
857	115	3123	55,092	137,638	865,251	27695,69	9474,267
967	131	3839	55	223,161	950,756	43361,66	20006,5

			Belastingen uit lijnen M_{langs}	M_{dwars}	N	V_{langs}	V_{dwars}	Belasting uit mast N	V	M
Perm load 1,2	0 deg	1a	4953	5872	110	109	129	967	131	3839
		1b	5990	6802	108	132	149	967	25	720
		3	7829	10052	219	172	221	967	37	1080
		4	1487	6329	118	31	139	967	25	720
		6	5404	6285	124	119	138			
	45 deg	1a	444	12253	116	9	269	967	131	3839
		1b	5705	7849	109	125	172	967	25	720
		3	6781	13324	222	149	293	967	37	1080
		4	1322	7362	119	27	161	967	25	720
	90 deg	1a	6367	20007	117	137	439	967	131	3839
		1b	6009	9075	110	132	199	967	25	720
		3	43362	17177	223	951	378	967	37	1080
		4	25938	8566	119	568	188	967	25	720
	-45 deg	1a	33564	12518	112	735	274	967	131	3839
		1b	29976	7895	108	659	173	967	25	720
		3	41288	13451	220	907	296	967	37	1080
		4	25301	7415	118	554	163	967	25	720
	0 deg	1a	5874	4719	82	135	103	967	131	3839
		1b	7251	5612	80	166	123	967	25	720
		3	13786	9103	191	322	200	967	37	1080
		4	2868	5199	90	69	114	967	25	720
		6	5875	4587	82	135	100			
	45 deg	1a	8821	11527	88	234	253	967	131	3839
		1b	10005	6696	81	247	147	967	25	720
		3	13920	12434	193	347	274	967	37	1080
		4	5430	6258	91	145	137	967	25	720
	90 deg	1a	14592	19611	88	361	431	967	131	3839
		1b	10673	8010	82	263	176	967	25	720
		3	7209	16413	195	157	361	967	37	1080
		4	741	7534	91	14	165	967	25	720
	-45 deg	1a	**10344**	11811	84	**226**	259	967	131	3839
		1b	5441	6742	**80**	119	148	967	25	720
		3	8327	**12563**	**191**	182	**277**	967	37	1080
		4	**722**	**6317**	90	**14**	**139**	967	25	720

regel		Loadcase	Totaal M_{langs}	M_{dwars}	N	V_{langs}	V_{dwars}	Totaal moment						
1 Perm load 1,2	0 deg	1a	8792	5872	1077	240	129	10572,6	1					
2 Perm load 1,2	0 deg	1b	6710	6802	1075	156	149	9554,412	2					
3 Perm load 1,2	0 deg	3	8908	10052	1186	209	221	13431,48	3					
4 Perm load 1,2	0 deg	4	2207	6329	1085	55	139	6702,643	4					
5 Perm load 1,2	0 deg	6							5					
6									6					
7 Perm load 1,2	45 deg	1a	3159	14967	1083	102	361	15296,99	7					
8 Perm load 1,2	45 deg	1b	6214	8358	1076	143	190	10415,4	8					
9 Perm load 1,2	45 deg	3	7544	14087	1189	175	319	15980,24	9					
10 Perm load 1,2	45 deg	4	1831	7871	1086	45	179	8081,547	10					
11									11					
12 Perm load 1,2	90 deg	1a	6367	23846	1084	137	570	24680,83	12	x		x		
13 Perm load 1,2	90 deg	1b	6009	9795	1077	132	224	11490,91	13					
14 Perm load 1,2	90 deg	3	43362	18257	1190	951	415	47048,34	14 x		x	x	x	
15 Perm load 1,2	90 deg	4 Construct	25938	9286	1086	568	212	27550,24	15					
16									16					
17 Perm load 1,2	-45 deg	1a	36278	15232	1079	827	367	39346,32	17					
18 Perm load 1,2	-45 deg	1b	30485	8404	1075	676	191	31622,42	18					
19 Perm load 1,2	-45 deg	3	42051	14214	1187	933	322	44388,86	19					
20 Perm load 1,2	-45 deg	4	25810	7924	1085	571	180	26999,05	20					
21									21					
22 Perm load 0,9	0 deg	1a	9713	4719	1049	266	103	10798,72	22					
23 Perm load 0,9	0 deg	1b	7971	5612	1047	190	123	9748,33	23					
24 Perm load 0,9	0 deg	3	14866	9103	1158	358	200	17431,59	24					
25 Perm load 0,9	0 deg	4	3588	5199	1057	93	114	6317,011	25					
26 Perm load 0,9	0 deg	6							26					
27									27					
28 Perm load 0,9	45 deg	1a	11536	14241	1055	326	346	18327,42	28					
29 Perm load 0,9	45 deg	1b	10514	7205	1048	265	164	12745,91	29					
30 Perm load 0,9	45 deg	3	14683	13198	1160	373	300	19742,54	30					
31 Perm load 0,9	45 deg	4 Construct	5939	6767	1058	162	155	9003,119	31					
32									32					
33 Perm load 0,9	90 deg	1a	14592	23450	1055	361	562	27619,41	33					
34 Perm load 0,9	90 deg	1b	10673	8730	1049	263	200	13788,32	34					
35 Perm load 0,9	90 deg	3	7209	17493	1162	157	398	18919,95	35					
36 Perm load 0,9	90 deg	4	741	8254	1058	14	190	8286,832	36					
37									37					
38 Perm load 0,9	-45 deg	1a	13059	14525	1051	318	352	19532,44	38					
39 Perm load 0,9	-45 deg	1b	5950	7251	1047	137	165	9380,077	39					
40 Perm load 0,9	-45 deg	3	9086	13326	1158	208	303	16128,79	40					
41 Perm load 0,9	-45 deg	4	1231	6826	1057	31	156	6936,131	41					
		Max	43362	23846	1190	951	570	47048						

samenvatting

	Mast	Bijlage		Wind	Loadcase	M_{langs}	M_{dwars}	N	V_{langs}	V_{dwars}
12	W4H400Z	26-AL	Perm load	90 deg	1a	6367	23846	1084	137	570
14	W4H400Z	26-AL	Perm load	90 deg	3	43362	18257	1190	951	415

W4H400ZA+10 (Aft (rev 8.0, date: 23-11-2012)
Loadcases for tower strength (ultimate APPENDIAL
Loadcase according to 50341-3-15

	Attachmen[N]	AHEAD [N]	[N]	[N]	BACK [N]	[N]	Totaal Vert [kN]	Dwars [kN]	Langs [kN]
1a	Comp. gl 4995	4622	39634	2472	4634	-39873	7,467	9,256	-0,039
Wind, 10	GW / opgv2408	2252	19132	1416	2252	-19150	3,824	4,504	-0,018
Permanen	380C1F1 18431	17024	145797	9349	17036	-145944	27,78	34,06	-0,147
Wind angl	380C1F2 18431	16997	145796	9963	17014	-145943	28,394	34,011	-0,147
	380C1F3 18432	16985	145795	10576	16987	-145941	29,008	33,952	-0,146
	150C1F1 4608	4256	36449	0	0	0	4,608	4,256	36,449
	150C1F2 4608	4249	36449	0	0	0	4,608	4,249	36,449
	150C1F3 4608	4241	36449	0	0	0	4,608	4,241	36,449
1b	Comp. gl 5072	5240	45788	2218	5228	-45669	7,29	10,468	0,119
Wind, -20	GW / opgv2449	2566	22385	1319	2558	-22318	3,768	5,124	0,067
Permanen	380C1F1 18776	19821	173170	8257	19759	-172638	27,033	39,58	0,532
Wind angl	380C1F2 18776	19815	173170	8963	19755	-172638	27,759	39,57	0,532
	380C1F3 18776	19809	173171	9709	19749	-172638	28,485	39,558	0,533
	150C1F1 4694	4955	43292	0	0	0	4,694	4,955	43,292
	150C1F2 4694	4954	43293	0	0	0	4,694	4,954	43,293
	150C1F3 4694	4952	43293	0	0	0	4,694	4,952	43,293
3	Comp. gl 19637	13339	116079	11823	13422	-116740	31,46	26,761	-0,661
Wind+Ice,	GW / opgv9721	6639	57599	6529	6674	-57926	16,25	13,313	-0,327
Permanen	380C1F1 31529	26759	232761	16847	26818	-233306	48,376	53,577	-0,545
Wind angl	380C1F2 31529	26744	232762	17828	26806	-233307	49,357	53,55	-0,545
	380C1F3 31529	26726	232763	18810	26791	-233308	50,339	53,517	-0,545
	150C1F1 7882	6690	58190	0	0	0	7,882	6,69	58,19
	150C1F2 7882	6686	58190	0	0	0	7,882	6,686	58,19
	150C1F3 7882	6681	58191	0	0	0	7,882	6,681	58,191
4	Comp. gl 5006	4641	40529	3479	5885	-51428	8,485	10,526	-10,899
Constructi	GW / opgv2414	2248	19597	1987	2874	-25091	4,401	5,122	-5,494
Permanen	380C1F1 18481	17145	149695	11318	19613	-171356	29,799	36,758	-21,661
Wind angl	380C1F2 18481	17139	149695	12039	19608	-171356	30,52	36,747	-21,661
	380C1F3 18481	17133	149696	12760	19603	-171356	31,241	36,736	-21,66
	150C1F1 4620	4286	37424	0	0	0	4,62	4,286	37,424
	150C1F2 4620	4285	37424	0	0	0	4,62	4,285	37,424
	150C1F3 4620	4283	37424	0	0	0	4,62	4,283	37,424
6	Comp. gl 5605	4953	43449	2827	4960	-43513	8,432	9,913	-0,064
Permanen	GW / opgv2703	2392	20985	1609	2396	-21016	4,312	4,788	-0,031
Permanen	380C1F1 20680	18180	159484	10698	18208	-159734	31,378	36,388	-0,25
	380C1F2 20680	18180	159484	11369	18208	-159734	32,049	36,388	-0,25
	380C1F3 20680	18180	159484	12041	18208	-159734	32,721	36,388	-0,25
	150C1F1 5170	4545	39871	0	0	0	5,17	4,545	39,871
	150C1F2 5170	4545	39871	0	0	0	5,17	4,545	39,871
	150C1F3 5170	4545	39871	0	0	0	5,17	4,545	39,871
1a	Comp. gl 4885	8375	45886	3223	11851	-57141	8,108	20,226	-11,255
Wind, 10	GW / opgv2324	4989	24775	1739	6906	-31480	4,063	11,895	-6,705
Permanen	380C1F1 17990	31639	170349	11970	42532	-205556	29,96	74,171	-35,207
Wind angl	380C1F2 18032	30502	167490	12183	40900	-200512	30,215	71,402	-33,022
	380C1F3 18082	29156	164217	12398	38979	-194635	30,48	68,135	-30,418
	150C1F1 4498	7910	42587	0	0	0	4,498	7,91	42,587
	150C1F2 4508	7625	41872	0	0	0	4,508	7,625	41,872
	150C1F3 4521	7289	41054	0	0	0	4,521	7,289	41,054
1b	Comp. gl 5065	5875	46029	2295	6377	-46589	7,36	12,252	0,56
Wind, -20	GW / opgv2442	3014	22644	1363	3293	-23076	3,805	6,307	-0,432
Permanen	380C1F1 18744	22291	174125	8532	23844	-175697	27,276	46,135	-1,572
Wind angl	380C1F2 18748	22113	173987	9204	23594	-175353	27,952	45,707	-1,366
	380C1F3 18752	21901	173836	9879	23301	-174971	28,631	45,202	-1,135
	150C1F1 4686	5573	43531	0	0	0	4,686	5,573	43,531
	150C1F2 4687	5528	43497	0	0	0	4,687	5,528	43,497
	150C1F3 4688	5475	43459	0	0	0	4,688	5,475	43,459
3	Comp. gl 19608	16563	116987	12135	19191	-120323	31,743	35,754	-3,336
Wind+Ice,	GW / opgv9694	8902	58561	6698	10339	-60784	16,392	19,241	-2,223
Permanen	380C1F1 31424	33793	236564	17728	38577	-244827	49,152	72,37	-8,263
Wind angl	380C1F2 31436	33281	236041	18542	37845	-243586	49,978	71,126	-7,545
	380C1F3 31451	32671	235461	19365	36988	-242198	50,816	69,659	-6,737
	150C1F1 7856	8448	59141	0	0	0	7,856	8,448	59,141
	150C1F2 7859	8320	59010	0	0	0	7,859	8,32	59,01
	150C1F3 7863	8168	58865	0	0	0	7,863	8,168	58,865
4	Comp. gl 5000	5275	40763	3525	6994	-51991	8,525	12,269	-11,228
Constructi	GW / opgv2408	2695	19847	2013	3577	-25558	4,421	6,272	-5,711
Permanen	380C1F1 18455	19614	150629	11501	23613	-173647	29,956	43,227	-23,018
Wind angl	380C1F2 18458	19436	150494	12185	23372	-173383	30,643	42,808	-22,889
	380C1F3 18462	19225	150346	12872	23088	-173090	31,334	42,313	-22,744
	150C1F1 4614	4903	37657	0	0	0	4,614	4,903	37,657
	150C1F2 4615	4859	37624	0	0	0	4,615	4,859	37,624
	150C1F3 4615	4806	37586	0	0	0	4,615	4,806	37,586
1a	Comp. gl 4697	15699	67388	3547	17025	-73854	8,244	32,724	-6,466
Wind, 10	GW / opgv2234	10132	40451	1840	10130	-41937	4,074	20,262	-1,486
Permanen	380C1F1 17290	59893	252074	13136	60808	-263276	30,426	120,701	-11,202
Wind angl	380C1F2 17340	56751	242669	13243	58139	-254819	30,583	114,89	-12,15
	380C1F3 17406	52982	231592	13346	54978	-244789	30,752	107,96	-13,397
	150C1F1 4323	14973	63018	0	0	0	4,323	14,973	63,018
	150C1F2 4335	14188	60667	0	0	0	4,335	14,188	60,667
	150C1F3 4352	13246	57848	0	0	0	4,352	13,246	57,848
1b	Comp. gl 5028	7022	47556	2404	7201	-48089	7,432	14,223	-0,533
Wind, -20	GW / opgv2409	3853	24128	1420	3833	-24253	3,829	7,686	-0,125
Permanen	380C1F1 18588	26754	180122	8920	26752	-180727	27,508	53,506	-0,605
Wind angl	380C1F2 18609	26239	179224	9520	26313	-179862	28,129	52,552	-0,638
	380C1F3 18635	25629	178220	10126	25800	-178894	28,761	51,429	-0,674
	150C1F1 4647	6689	45031	0	0	0	4,647	6,689	45,031
	150C1F2 4652	6560	44806	0	0	0	4,652	6,56	44,806
	150C1F3 4659	6407	44555	0	0	0	4,659	6,407	44,555
3	Comp. gl 19470	22237	122931	12544	23202	-126118	32,014	45,439	-3,187
Wind+Ice,	GW / opgv9579	12979	64084	6899	12921	-65131	16,478	25,9	-1,047
Permanen	380C1F1 30978	46789	257842	18785	47078	0	49,763	93,867	257,842
Wind angl	380C1F2 31034	45288	254801	19422	45798	0	50,456	91,086	254,801
	380C1F3 31101	43509	251349	20070	44299	0	51,171	87,808	251,349
	150C1F1 7745	11697	64461	0	0	0	7,745	11,697	64,461
	150C1F2 7759	11322	63700	0	0	0	7,759	11,322	63,7
	150C1F3 7775	10877	62837	0	0	0	7,775	10,877	62,837
4	Comp. gl 4969	6418	42250	3594	7759	-52976	8,563	14,177	-10,726
Constructi	GW / opgv2381	3530	21290	2050	4071	-26338	4,431	7,601	-5,048
Permanen	380C1F1 18328	24067	156522	11768	26396	0	30,096	50,463	156,522
Wind angl	380C1F2 18346	23554	155639	12402	25978	0	30,748	49,532	155,639
	380C1F3 18366	22945	154652	13041	25488	0	31,407	48,433	154,652
	150C1F1 4582	6017	39130	0	0	0	4,582	6,017	39,13

		Belastingen op mastvoet, per lijn M_{langs}	M_{dwars}	N	V_{langs}	V_{dwars}
		-1,1505	288,8746	7,467	-0,039	9,256
		-1,12374	284,091	3,824	-0,018	4,504
		-7,938	1839,24	27,78	-0,147	34,06
		-6,6885	1547,501	28,394	-0,147	34,011
		-5,402	1256,224	29,008	-0,146	33,952
		1968,246	255,168	4,608	36,449	4,256
		1658,43	218,6735	4,608	36,449	4,249
		1348,613	182,261	4,608	36,449	4,241
		3,5105	324,2535	7,29	0,119	10,468
		4,18281	322,755	3,768	0,067	5,124
		28,728	2137,32	27,033	0,532	39,58
		24,206	1800,435	27,759	0,532	39,57
		19,721	1463,646	28,485	0,533	39,558
		2337,768	293,387	4,694	43,292	4,955
		1969,832	251,224	4,694	43,293	4,954
		1601,841	209,041	4,694	43,293	4,952
		-19,4995	856,1132	31,46	-0,661	26,761
		-20,4146	843,4806	16,25	-0,327	13,313
		-29,43	2893,158	48,376	-0,545	53,577
		-24,7975	2436,525	49,357	-0,545	53,55
		-20,165	1980,129	50,339	-0,545	53,517
		3142,26	404,611	7,882	58,19	6,69
		2647,645	347,564	7,882	58,19	6,686
		2153,067	290,548	7,882	58,191	6,681
		-321,521	328,4967	8,485	-10,899	10,526
		-342,99	323,1112	4,401	-5,494	5,122
		-1169,69	1984,932	29,799	-21,661	36,758
		-985,576	1671,989	30,52	-21,661	36,747
		-801,42	1359,232	31,241	-21,66	36,736
		2020,896	256,854	4,62	37,424	4,286
		1702,792	220,3775	4,62	37,424	4,285
		1384,688	183,881	4,62	37,424	4,283
		-1,888	310,3009	8,432	-0,064	9,913
		-1,93533	302,192	4,312	-0,031	4,788
		-13,5	1964,952	31,378	-0,25	36,388
		-11,375	1655,654	32,049	-0,25	36,388
		-9,25	1346,356	32,721	-0,25	36,388
		2153,034	273,865	5,17	39,871	4,545
		1814,131	235,2325	5,17	39,871	4,545
		1475,227	196,6	5,17	39,871	4,545
		-332,023	613,8479	8,108	-11,255	20,226
		-418,593	745,6927	4,063	-6,705	11,895
		-1901,18	4005,234	29,96	-35,207	74,171
		-1502,5	3248,791	30,215	-33,022	71,402
		-1125,47	2520,995	30,48	-30,418	68,135
		2299,698	451,879	4,498	42,587	7,91
		1905,176	371,7315	4,508	41,872	7,625
		1518,998	294,5585	4,521	41,054	7,289
		-16,52	377,0298	7,36	-0,56	12,252
		-26,9698	396,6378	3,805	-0,432	6,307
		-84,888	2491,29	27,276	-1,572	46,135
		-62,153	2079,669	27,952	-1,366	45,707
		-41,995	1672,474	28,631	-1,135	45,202
		2350,674	326,715	4,686	43,531	5,573
		1979,114	277,3025	4,687	43,497	5,528
		1607,983	228,359	4,688	43,459	5,475
		-98,412	1122,006	31,743	-3,336	35,754
		-138,782	1213,674	16,392	-2,223	19,241
		-446,202	3907,98	49,152	-8,263	72,37
		-343,298	3236,233	49,978	-7,545	71,126
		-249,269	2577,383	50,816	-6,737	69,659
		3193,614	499,4	7,856	59,141	8,448
		2684,955	421,7845	7,859	59,01	8,32
		2178,005	345,4625	7,863	58,865	8,168
		-331,226	380	8,525	-11,228	12,269
		-356,538	394,9209	4,421	-5,711	6,272
		-1242,97	2334,258	29,956	-23,018	43,227
		-1041,45	1947,764	30,643	-22,889	42,808
		-841,528	1565,581	31,334	-22,744	42,313
		2033,478	290,139	4,614	37,657	4,903
		1711,892	246,467	4,615	37,624	4,859
		1390,682	203,2045	4,615	37,586	4,806
		-190,747	982,827	8,244	-6,466	32,724
		-92,771	1268,053	4,074	-1,486	20,262
		-604,908	6517,854	30,426	-11,202	120,701
		-552,825	5227,495	30,583	-12,15	114,89
		-495,689	3994,52	30,752	-13,397	107,96
		3402,972	832,3185	4,323	63,018	14,973
		2760,349	669,3965	4,335	60,667	14,188
		2140,376	514,038	4,352	57,848	13,246
		-15,7235	435,3269	7,432	-0,533	14,223
		-7,80375	482,747	3,829	-0,125	7,686
		-32,67	2889,324	27,508	-0,605	53,506
		-29,029	2391,116	28,129	-0,638	52,552
		-24,938	1902,873	28,761	-0,674	51,429
		2431,674	386,7645	4,647	45,031	6,689
		2038,673	324,066	4,652	44,806	6,56
		1648,535	262,6835	4,659	44,555	6,407
		-94,0165	1408,288	32,014	-3,187	45,439
		-65,3642	1629,46	16,478	-1,047	25,9
		13923,47	5068,818	49,763	257,842	93,867
		11593,45	4144,413	50,456	254,801	91,086
		9299,913	3248,896	51,171	251,349	87,808
		3480,894	674,2355	7,745	64,461	11,697
		2898,35	557,8255	7,759	63,7	11,322
		2324,969	445,2115	7,775	62,837	10,877
		-316,417	436,3665	8,563	-10,726	14,177
		-315,147	477,898	4,431	-5,048	7,601
		8452,188	2725,002	30,096	156,522	50,463
		7081,575	2253,706	30,748	155,639	49,532
		5722,124	1792,021	31,407	154,652	48,433
		2113,02	350,119	4,582	39,13	6,017

		Belasting op mastvoet, belastinggeval M_{langs}	M_{dwars}	N	V_{langs}	V_{dwars}
1a		4952,986	5872,033	110,297	108,85	128,529
Wind angle:	0 dgr					
1b		5989,789	6802,062	108,417	131,661	149,161
Wind angle:	0 dgr					
3		7828,665	10052,13	219,428	171,948	220,775
Wind angle:	0 dgr					
4		1487,176	6328,873	118,306	30,897	138,743
Wind angle:	0 dgr					
6		5404,443	6285,152	124,402	118,768	137,5
0						
1a		444,1114	12252,73	116,353	8,906	268,653
Wind angle:	45 dgr					
1b		5705,245	7849,477	109,085	125,422	172,179
Wind angle:	45 dgr					
3		6780,612	13323,92	221,659	148,912	293,086
Wind angle:	45 dgr					
4		1322,339	7362,334	118,723	27,277	161,457
Wind angle:	45 dgr					
1a		6366,757	20006,5	117,089	136,832	438,944
Wind angle:	90 dgr					
1b		6008,718	9074,901	109,617	131,817	199,052
Wind angle:	90 dgr					
3		43361,66	17177,15	223,161	950,756	377,996
Wind angle:	90 dgr					
4		25938,28	8565,733	119,006	567,742	187,847
Wind angle:	90 dgr					

	150C1F2	4587	5888	38910	0	0	0	4,587	5,888	38,91	1770,405	293,1325	4,587	38,91	5,888						
	150C1F3	4592	5736	38663	0	0	0	4,592	5,736	38,663	1430,531	237,488	4,592	38,663	5,736						
1a	Comp. gl	4797	11050	53321	2915	8838	-47917	7,712	19,888	5,404	159,418	603,0377	7,712	5,404	19,888	1a	33563,61	12517,81	111,75	734,822	274,284
Wind, 10 (	GW / opgv	2277	6906	30552	1627	4983	-25310	3,904	11,889	5,242	327,2581	745,1973	3,904	5,242	11,889	Wind angle: -45 dgr					
Permaner	380C1F1	17658	42000	198929	10879	31904	0	28,537	73,904	198,929	10742,17	3990,816	28,537	198,929	73,904						
Wind angl	380C1F2	17712	40090	193429	11230	30930	0	28,942	71,02	193,429	8801,02	3231,41	28,942	193,429	71,02						
	380C1F3	17781	37816	186983	11587	29790	0	29,368	67,606	186,983	6918,371	2501,422	29,368	186,983	67,606						
	150C1F1	4414	10500	49732	0	0	0	4,414	10,5	49,732	2685,528	591,277	4,414	49,732	10,5						
	150C1F2	4428	10023	48357	0	0	0	4,428	10,023	48,357	2200,244	480,4005	4,428	48,357	10,023						
	150C1F3	4445	9454	46746	0	0	0	4,445	9,454	46,746	1729,602	374,2455	4,445	46,746	9,454						
1b	Comp. gl	5054	6288	46446	2250	5920	-46016	7,304	12,208	0,43	12,685	375,6132	7,304	0,43	12,208	1b	29976,31	7894,846	108,453	658,63	173,147
Wind, -20	GW / opgv	2432	3313	23062	1338	2997	-22612	3,77	6,31	0,45	28,0935	396,7985	3,77	0,45	6,31	Wind angle: -45 dgr					
Permaner	380C1F1	18698	23896	175766	8370	22224	0	27,068	46,12	175,766	9491,364	2490,48	27,068	175,766	46,12						
Wind angl	380C1F2	18708	23600	175413	9074	22075	0	27,782	45,675	175,413	7981,292	2078,213	27,782	175,413	45,675						
	380C1F3	18719	23248	175022	9778	21900	0	28,497	45,148	175,022	6475,814	1670,476	28,497	175,022	45,148						
	150C1F1	4675	5974	43941	0	0	0	4,675	5,974	43,941	2372,814	348,3085	4,675	43,941	5,974						
	150C1F2	4677	5900	43853	0	0	0	4,677	5,9	43,853	1995,312	294,1735	4,677	43,853	5,9						
	150C1F3	4680	5812	43755	0	0	0	4,68	5,812	43,755	1618,935	240,784	4,68	43,755	5,812						
3	Comp. gl	19566	18624	118620	11954	16922	-118071	31,52	35,546	0,549	16,1955	1115,398	31,52	0,549	35,546	3	41287,93	13450,96	219,604	906,569	295,765
Wind+ice,	GW / opgv	9657	10375	60139	6602	8885	-59025	16,259	19,26	1,114	69,54702	1214,759	16,259	1,114	19,26	Wind angle: -45 dgr					
Permaner	380C1F1	31282	38453	242646	17226	33855	0	48,508	72,308	242,646	13102,88	3904,632	48,508	242,646	72,308						
Wind angl	380C1F2	31311	37590	241358	18133	33424	0	49,444	71,014	241,358	10981,79	3231,137	49,444	241,358	71,014						
0	380C1F3	31344	36567	239920	19044	32918	0	50,388	69,485	239,92	8877,04	2570,945	50,388	239,92	69,485						
	150C1F1	7821	9613	60662	0	0	0	7,821	9,613	60,662	3275,748	562,1175	7,821	60,662	9,613						
	150C1F2	7828	9397	60340	0	0	0	7,828	9,397	60,34	2745,47	470,6175	7,828	60,34	9,397						
	150C1F3	7836	9142	59980	0	0	0	7,836	9,142	59,98	2219,26	381,352	7,836	59,98	9,142						
4	Comp. gl	4991	5687	41168	3498	6560	-51628	8,489	12,247	-10,46	-308,57	379,2747	8,489	-10,46	12,247	4	25300,98	7415,328	118,282	554,081	162,59
Constructi	GW / opgv	2400	2993	20253	1998	3299	-25264	4,398	6,292	-5,011	-312,837	396,152	4,398	-5,011	6,292	Wind angle: -45 dgr					
Permaner	380C1F1	18418	21217	152240	11393	22043	0	29,811	43,26	152,24	8220,96	2336,04	29,811	152,24	43,26						
Wind angl	380C1F2	18426	20921	151893	12099	21898	0	30,525	42,819	151,893	6911,132	1948,265	30,525	151,893	42,819						
	380C1F3	18434	20569	151509	12805	21727	0	31,239	42,296	151,509	5605,833	1564,952	31,239	151,509	42,296						
	150C1F1	4605	5304	38060	0	0	0	4,605	5,304	38,06	2055,24	311,7435	4,605	38,06	5,304						
	150C1F2	4606	5230	37973	0	0	0	4,606	5,23	37,973	1727,772	263,298	4,606	37,973	5,23						
	150C1F3	4609	5142	37877	0	0	0	4,609	5,142	37,877	1401,449	215,6035	4,609	37,877	5,142						
1a	Comp. gl	3769	3702	31566	1778	3708	0	5,547	7,41	31,566	931,197	230,3491	5,547	31,566	7,41	1a	5874,107	4718,893	82,21	134,541	103,384
Wind, 10 (	GW / opgv	1817	1806	15212	1037	1803	0	2,854	3,609	15,212	949,6852	227,4789	2,854	15,212	3,609	Wind angle: 0 dgr					
Permaner	380C1F1	13916	13716	116774	6718	13704	-116713	20,634	27,42	0,061	3,294	1480,68	20,634	0,061	27,42						
Wind angl	380C1F2	13916	13688	116771	7208	13681	-116710	21,124	27,369	0,061	2,7755	1245,29	21,124	0,061	27,369						
	380C1F3	13916	13656	116768	7698	13655	-116706	21,614	27,311	0,062	2,294	1010,507	21,614	0,062	27,311						
	150C1F1	3479	3429	29194	0	0	0	3,479	3,429	29,194	1576,476	204,3005	3,479	29,194	3,429						
	150C1F2	3479	3422	29193	0	0	0	3,479	3,422	29,193	1328,282	174,8355	3,479	29,193	3,422						
	150C1F3	3479	3414	29192	0	0	0	3,479	3,414	29,192	1080,104	145,4525	3,479	29,192	3,414						
1b	Comp. gl	3843	4284	37396	1539	4263	0	5,382	8,547	37,396	1103,182	263,541	5,382	37,396	8,547	1b	7250,951	5612,207	80,419	165,708	123,199
Wind, -20	GW / opgv	1856	2099	18286	945	2087	0	2,801	4,186	18,286	1141,595	263,4607	2,801	18,286	4,186	Wind angle: 0 dgr					
Permaner	380C1F1	14252	16414	143287	5665	16316	-142434	19,917	32,73	0,853	46,062	1767,42	19,917	0,853	32,73						
Wind angl	380C1F2	14252	16409	143287	6264	16312	-142434	20,516	32,721	0,853	38,8115	1488,806	20,516	0,853	32,721						
	380C1F3	14252	16402	143288	6862	16306	-142434	21,114	32,708	0,854	31,598	1210,196	21,114	0,854	32,708						
	150C1F1	3563	4104	35822	0	0	0	3,563	4,104	35,822	1934,388	241,2125	3,563	35,822	4,104						
	150C1F2	3563	4102	35822	0	0	0	3,563	4,102	35,822	1629,901	206,2375	3,563	35,822	4,102						
	150C1F3	3563	4101	35822	0	0	0	3,563	4,101	35,822	1325,414	171,3335	3,563	35,822	4,101						
3	Comp. gl	18446	12759	110989	11002	12836	0	29,448	25,595	110,989	3274,176	817,4528	29,448	110,989	25,595	3	13786,01	9103,317	190,914	321,503	200,236
Wind+ice,	GW / opgv	9147	6359	55136	6104	6391	0	15,251	12,75	55,136	3442,14	807,5733	15,251	55,136	12,75	Wind angle: 0 dgr					
Permaner	380C1F1	27070	23984	208418	14023	24017	-208730	41,093	48,001	-0,312	-16,848	2592,054	41,093	-0,312	48,001						
Wind angl	380C1F2	27070	23969	208419	14900	24004	-208731	41,97	47,973	-0,312	-14,196	2182,772	41,97	-0,312	47,973						
	380C1F3	27070	23951	208420	15778	23990	-208732	42,848	47,941	-0,312	-11,544	1773,817	42,848	-0,312	47,941						
	150C1F1	6768	5996	52104	0	0	0	6,768	5,996	52,104	2813,616	361,008	6,768	52,104	5,996						
	150C1F2	6768	5992	52105	0	0	0	6,768	5,992	52,105	2370,778	309,86	6,768	52,105	5,992						
	150C1F3	6768	5988	52105	0	0	0	6,768	5,988	52,105	1927,885	258,78	6,768	52,105	5,988						
4	Comp. gl	3779	3713	32388	2754	5043	0	6,533	8,756	32,388	955,446	272,1454	6,533	32,388	8,756	4	2868,376	5198,994	89,989	68,613	114,125
Constructi	GW / opgv	1822	1797	15635	1596	2465	0	3,418	4,262	15,635	976,0931	268,6743	3,418	15,635	4,262	Wind angle: 0 dgr					
Permaner	380C1F1	13962	13807	120414	8622	16455	-143655	22,584	30,262	-23,241	-1255,01	1634,148	22,584	-23,241	30,262						
Wind angl	380C1F2	13962	13802	120414	9226	16451	-143655	23,188	30,253	-23,241	-1057,47	1376,512	23,188	-23,241	30,253						
	380C1F3	13962	13795	120415	9831	16446	-143655	23,793	30,241	-23,24	-859,88	1118,917	23,793	-23,24	30,241						
	150C1F1	3491	3452	30104	0	0	0	3,491	3,452	30,104	1625,616	205,6085	3,491	30,104	3,452						
	150C1F2	3491	3450	30104	0	0	0	3,491	3,45	30,104	1369,732	176,1755	3,491	30,104	3,45						
	150C1F3	3491	3449	30104	0	0	0	3,491	3,449	30,104	1113,848	146,8135	3,491	30,104	3,449						
6	Comp. gl	3769	3598	31565	1777	3596	0	5,546	7,194	31,565	931,1675	223,975	5,546	31,565	7,194	6	5874,866	4587,075	82,202	134,559	100,487
Permaner	GW / opgv	1817	1734	15208	1036	1733	0	2,853	3,467	15,208	949,4354	218,6131	2,853	15,208	3,467	0					
Permaner	380C1F1	13917	13311	116772	6714	13303	-116703	20,631	26,614	0,069	3,726	1437,156	20,631	0,069	26,614						
	380C1F2	13917	13311	116772	7205	13303	-116703	21,122	26,614	0,069	3,1395	1210,937	21,122	0,069	26,614						
	380C1F3	13917	13311	116772	7696	13303	-116703	21,613	26,614	0,069	2,553	984,718	21,613	0,069	26,614						
	150C1F1	3479	3328	29193	0	0	0	3,479	3,328	29,193	1576,422	198,8465	3,479	29,193	3,328						
	150C1F2	3479	3328	29193	0	0	0	3,479	3,328	29,193	1328,282	170,5585	3,479	29,193	3,328						
	150C1F3	3479	3328	29193	0	0	0	3,479	3,328	29,193	1080,141	142,2705	3,479	29,193	3,328						
1a	Comp. gl	3641	7708	40034	2529	11411	0	6,17	19,119	40,034	1181,003	577,0847	6,17	40,034	19,119	1a	8821,284	11526,84	88,127	233,516	252,914
Wind, 10 (	GW / opgv	1727	4728	22490	1341	6738	0	3,068	11,466	22,49	1404,051	718,1541	3,068	22,49	11,466	Wind angle: 45 dgr					
Permaner	380C1F1	13406	29308	149924	9367	40913	-191370	22,773	70,221	-41,446	-2238,08	3791,934	22,773	-41,446	70,221						
Wind angl	380C1F2	13447	28087	146321	9484	39200	-185615	22,931	67,287	-39,294	-1787,88	3061,559	22,931	-39,294	67,287						
	380C1F3	13498	26637	142137	9599	37176	0	23,097	63,813	142,137	5259,069	2361,081	23,097	142,137	63,813						
	150C1F1	3352	7327	37481	0	0	0	3,352	7,327	37,481	2023,974	414,094	3,352	37,481	7,327						
	150C1F2	3362	7022	36580	0	0	0	3,362	7,022	36,58	1664,39	337,992	3,362	36,58	7,022						
	150C1F3	3374	6659	35534	0	0	0	3,374	6,659	35,534	1314,758	264,94	3,374	35,534	6,659						
1b	Comp. gl	3832	4935	37779	1646	5464	-38582	5,478	10,399	-0,803	-23,6885	318,3784	5,478	-0,803	10,399	1b	10004,84	6696,422	81,357	247,2	147,018
Wind, -20	GW / opgv	1846	2562	18683	1005	2862	-19297	2,851	5,424	-0,614	-38,332	340,7871	2,851	-0,614	5,424	Wind angle: 45 dgr					
Permaner	380C1F1	14206	18948	144803	6053	20577	-147044	20,259	39,525	-2,241	-121,014	2134,35	20,259	-2,241	39,525						
Wind angl	380C1F2	14211	18762	144595	6577	20309	-146543	20,788	39,071	-1,948	-88,634	1777,731	20,788	-1,948	39,071						
	380C1F3	14218	18541	144365	7105	19996	0	21,323	38,537	144,365	5341,505	1425,869	21,323	144,365	38,537						
	150C1F1	3551	4737	36201	0	0	0	3,551	4,737	36,201	1954,854	275,3285	3,551	36,201	4,737						
	150C1F2	3553	4690	36149	0	0	0	3,553	4,69	36,149	1644,78	232,9365	3,553	36,149	4,69						
	150C1F3	3554	4635	36091	0	0	0	3,554	4,635	36,091	1335,367	191,042	3,554	36,091	4,635						
3	Comp. gl	18414	15995	112008	11337	18644	-115534	29,751	34,639	-3,526	-104,017	1084,893	29,751	-3,526	34,639	3	13919,59	12434,08	193,477	346,887	273,829
Wind+ice,	GW / opgv	9117	8632	56198	6284	10084	-58553	15,401	18,716	-2,355	-147,023	1180,145	15,401	-2,355	18,716	Wind angle: 45 dgr					
Permaner	380C1F1	26944	31133	213237	15054	36078	-222922	41,998	67,211	-9,685	-522,99	3629,394	41,998	-9,685	67,211						
Wind angl	380C1F2	26959	30606	212589	15739	35318	-221429	42,698	65,924	-8,84	-402,22	2999,542	42,698	-8,84	65,924						
	380C1F3	26976	29981	211870	16433	34428	0	43,409	64,409	211,87	7839,19	2383,133	43,409	211,87	64,409						
	150C1F1	6736	7783	53309	0	0	0	6,736	7,783	53,309	2878,686	457,33	6,736	53,309	7,783						
	150C1F2	6740	7652	53147	0	0	0	6,74	7,652	53,147	2418,189	385,236	6,74	53,147	7,652						
	150C1F3	6744	7495	52967	0	0	0	6,744	7,495	52,967	1959,779	314,407	6,744	52,967	7,495						
4	Comp. gl	3771	4362	32756	2812	6174	-44805	6,583	10,536	-12,049	-355,446	324,7614	6,583	-12,049	10,536	4	5429,533	6257,859	90,524	144,709	137,391
Constructi	GW / opgv	1814	2258	16016	1629	3185	-22127	3,443	5,443	-6,111	-381,51	342,4232	3,443	-6,111	5,443	Wind angle: 45 dgr					
Permaner	380C1F1	13927	16337	121888	8860	20562	-146893	22,787	36,899	-25,005	-1350,27	1992,546	22,787	-25,005	36,899						
Wind angl	380C1F2	13931	16152	121685	9417	20310	-146530	23,348	36,462	-24,845	-1130,45	1659,021	23,348	-24,845	36,462						
	380C1F3	13936	15932	121461	9978	20014	0	23,914	35,946	121,461	4494,057	1330,002	23,914	121,461	35,946						
	150C1F1	3482	4084	30472	0	0	0	3,482	4,084	30,472	1645,488	239,687	3,482	30,472	4,084						
	150C1F2	3483	4038	30421	0	0	0	3,483	4,038	30,421	1384,156	202,8855	3,483	30,421	4,038						
	150C1F3	3484	3983	30365	0	0	0	3,484	3,983	30,365	1123,505	166,533	3,484	30,365	3,983						
1a	Comp. gl	3491	15381	64611	2754	16752	-71470	6,245	32,133	-6,859	-202,341	961,1567	6,245	-6,859	32,133	1a	14592,46	19610,78	88,388	361,185	430,555
Wind, 10 (	GW / opgv	1663	10028	39542	1406	10031	-41069	3,069	20,059	-1,527	-95,3306	1254,616	3,069	-1,527	20,059	Wind angle: 90 dgr					
Permaner	380C1F1	12856	58821	242692	10187	59802	-254471	23,043	118,623	-11,779	-636,066	6405,642	23,043	-11,779	118,623						
Wind angl	380C1F2	12889	55598	232575	10243	57069	-245448	23,132	112,667	-12,873	-585,722	5126,349	23,132	-12,873	112,667						
	380C1F3	12934	51718	220325	10295	53822	0	23,229	105,54	220,325	8152,025	3904,98	23,229	220,325	105,54						
	150C1F1	3214	14705	60673	0	0	0	3,214	14,705	60,673	3276,342	811,747	3,214	60,673	14,705						
	150C1F2	3222	13899	58144	0	0	0	3,222	13,899	58,144	2645,552	650,1255	3,222	58,144	13,899						
	150C1F3	3234	12929	55081	0	0	0	3,234	12,929	55,081	2037,997	496,16	3,234	55,081	12,929						
1b	Comp. gl	3783	6159	39990	1784	6358	-40698	5,567	12,517	-0,708	-20,886	381,048	5,567	-0,708	12,517	1b	10672,94	8009,797	82,018	262,552	175,811
Wind, -20	GW / opgv	1805	3468	20758	1073	3451	-20908	2,878	6,919	-0,15	-9,3645	434,1405	2,878	-0,15	6,919	Wind angle: 90 dgr					
Permaner	380C1F1	13995	23714	153464	6556	23724	-154175	20,551	47,438	-0,711	-38,394	2561,652	20,551	-0,711	47,438						
Wind angl	380C1F2	14023	23157	152202	6991	23247	-152971	21,014	46,404	-0,769	-34,9895	2111,382	21,014	-0,769	46,404						
	380C1F3	14056	22500	150779	7433	22690	0	21,489	45,19	150,779	5578,823	1672,03	21,489	150,779	45,19						
	150C1F1	3499	5929	38366	0	0	0	3,499	5,929	38,366	2071,764	339,4105	3,499	38,366	5,929						
	150C1F2	3506	5789	38050	0	0	0	3,506	5,789	38,05	1731,275	282,6825	3,506	38,05	5,789						
	150C1F3	3514	5625	37695	0	0	0	3,514	5,625	37,695	1394,715	227,452	3,514	37,695	5,625						
3	Comp. gl	18267	21726	118463	11766	22707	-121782	30,033	44,433	-3,319	-97,9105	1374,413	30,033	-3,319	44,433	3	7208,888	16413,03	195,035	157,225	361,482
Wind+ice,	GW / opgv	8997	12756	62134	6492	12700	-63198	15,489	25,456	-1,064	-66,4255	1600,99	15,489	-1,064	25,456	Wind angle: 90 dgr					
Permaner	380C1F1	26448	44599	238649	16192	44926	-243289	42,64	89,525	-4,64	-250,56	4834,35	42,64	-4,64	89,525						
Wind angl	380C1F2	26507	43039	235100	16695	43595	-239951	43,202	86,634	-4,851	-220,721	3941,847	43,202	-4,851	86,634						
	380C1F3	26579	41192	231043	17208	42034	-236142	43,787	83,226	-5,099	-188,663	3079,362	43,787	-5,099	83,226						
	150C1F1	6612	11150	59662	0	0	0	6,612	11,15	59,662	3221,748	638,466	6,612	59,662	11,15						
	150C1F2	6627	10760	58775	0	0	0	6,627	10,76	58,775	2674,263	526,0285	6,627	58,775	10,76						
	150C1F3	6645	10298	57761	0	0	0	6,645	10,298	57,761	2137,157	417,5735	6,645	57,761	10,298						
4	Comp. gl	3731	5579	34890	2896	6973	-46084	6,627	12,552	-11,194	-330,223	384,3266	6,627	-11,194	12,552	4	740,81	7533,84	90,846	13,991	165,362
Constructi	GW / opgv	1781	3156	18016	1673	3705	-23123	3,454	6,861	-5,107	-318,83	430,9573	3,454	-5,107	6,861	Wind angle: 90 dgr					
Permaner	380C1F1	13762	21082	130347	9192	23499	-152170	22,954	44,581	-21,823	-1178,44	2407,374	22,954	-21,823	44,581						
Wind angl	380C1F2	13784	20529	129113	9688	23056	-151265	23,472	43,585	-22,152	-1007,92	1983,118	23,472	-22,152	43,585						
	380C1F3	13810	19874	127722	10190	22537	-150250	24	42,411	-22,528	-833,536	1569,207	24	-22,528	42,411						
	150C1F1	3441	5271	32587	0	0	0	3,441	5,271	32,587	1759,698	303,5595	3,441	32,587	5,271						
	150C1F2	3446	5132	32278	0	0	0	3,446	5,132	32,278	1468,649	252,459	3,446	32,278	5,132						
	150C1F3	3452	4969	31930	0	0	0	3,452	4,969	31,93	1181,41	202,839	3,452	31,93	4,969						
1a	Comp. gl	3564	10555	48981	2274	8218	-42486	5,838	18,773	6,495	191,6025	566,1742	5,838	6,495	18,773	1a	10344,32	11810,61	84,152	225,516	258,941
Wind, 10 (	GW / opgv	1691	6731	29019	1257	4730	-23087	2,948	11,461	5,932	370,3348	717,7507	2,948	5,932	11,461	Wind angle: -45 dgr					
Permaner	380C1F1	13119	40301	184042	8451	29642	-154078	21,57	69,943	29,964	1618,056	3776,922	21,57	29,964	69,943						
Wind angl	380C1F2	13162	38293	177684	8663	28594	-150748	21,825	66,887	26,936	1225,588	3043,359	21,825	26,936	66,887						
	380C1F3	13218	35892	170126	8878	27364	-146899	22,096	63,256	23,227	859,399	2340,472	22,096	23,227	63,256						
	150C1F1	3280	10075	46010	0	0	0	3,28	10,075	46,01	2484,54	562,09	3,28	46,01	10,075						
	150C1F2	3290	9573	44421	0	0	0	3,29	9,573	44,421	2021,156	453,6665	3,29	44,421	9,573						
	150C1F3	3305	8973	42531	0	0	0	3,305	8,973	42,531	1573,647	350,1785	3,305	42,531	8,973						
1b	Comp. gl	3817	5370	38398	1584	4977	-37741	5,401	10,347	0,657	19,3815	316,6812	5,401	0,657	10,347	1b	5441,289	6742,229	80,473	119,399	147,995
Wind, -20	GW / opgv	1832	2882	19288	971	2543	-18629	2,803	5,425	0,659	41,14137	340,813	2,803	0,659	5,425	Wind angle: -45 dgr					
Permaner	380C1F1	14142	20643	147238	5828	18854	-144225	19,97	39,497	3,013	162,702	2132,838	19,97	3,013	39,497						
Wind angl	380C1F2	14155	20328	146720	6395	18697	-144021	20,55	39,025	2,699	122,8045	1775,638	20,55	2,699	39,025						
	380C1F3	14170	19955	146142	6963	18514	-143796	21,133	38,469	2,346	86,802	1423,353	21,133	2,346	38,469						
	150C1F1	3535	5161	36809	0	0	0	3,535	5,161	36,809	1987,686	298,1365	3,535	36,809	5,161						
	150C1F2	3539	5082	36680	0	0	0	3,539	5,082	36,68	1668,94	250,6955	3,539	36,68	5,082						
	150C1F3	3542	4989	36536	0	0	0	3,542	4,989	36,536	1351,832	204,074	3,542	36,536	4,989						
3	Comp. gl	18370	18073	113794	11144	16353	-113078	29,514	34,426	0,716	21,122	1078,107	29,514	0,716	34,426	3	8322,442	12562,58	191,131	182,169	276,539
Wind+ice,	GW / opgv	9078	10120	57910	6183	8614	-56648	15,261	18,734	1,262	78,78666	1181,162	15,261	1,262	18,734	Wind angle: -45 dgr					

Permaner	380C1F1	26780	35945	220661	14476	31185	-214388	41,256	67,13	6,273	338,742	3625,02	41,256	6,273	67,13													
Wind angl	380C1F2	26812	35051	219103	15266	30740	-213759	42,078	65,791	5,344	243,152	2993,491	42,078	5,344	65,791													
0	380C1F3	26850	33992	217354	16061	30219	-213059	42,911	64,211	4,295	158,915	2375,807	42,911	4,295	64,211													
	150C1F1	6695	8986	55165	0	0	0	6,695	8,986	55,165	2978,91	522,0665	6,695	55,165	8,986													
	150C1F2	6703	8763	54776	0	0	0	6,703	8,763	54,776	2492,308	435,583	6,703	54,776	8,763													
	150C1F3	6713	8498	54338	0	0	0	6,713	8,498	54,338	2010,506	351,3475	6,713	54,338	8,498													
4	Comp. gl	3759	4796	33352	2778	5727	-44323	6,537	10,523	-10,971	-323,645	324,2804	6,537	-10,971	10,523													
Construct	GW / opgs	1803	2576	16597	1610	2898	-21741	3,413	5,474	-5,144	-321,14	344,3357	3,413	-5,144	5,474													
Permaner	380C1F1	13877	18026	124263	8720	18929	-144874	22,597	36,955	-20,611	-1112,99	1995,57	22,597	-20,611	36,955													
Wind angl	380C1F2	13887	17713	123757	9305	18780	-144731	23,192	36,493	-20,974	-954,317	1660,432	23,192	-20,974	36,493													
	380C1F3	13899	17341	123194	9891	18603	-144572	23,79	35,944	-21,378	-790,986	1329,928	23,79	-21,378	35,944													
	150C1F1	3469	4507	31066	0	0	0	3,469	4,507	31,066	1677,564	262,4575	3,469	31,066	4,507													
	150C1F2	3472	4428	30939	0	0	0	3,472	4,428	30,939	1407,725	220,57	3,472	30,939	4,428													
	150C1F3	3475	4335	30799	0	0	0	3,475	4,335	30,799	1139,563	179,5075	3,475	30,799	4,335													
																4	721,7701	6317,081	89,945	13,726	138,659							
																Wind angle: -45 dgr												

W4H400Z 26-AL1

Hoogte mast	Ber & bijlage			50 m	
Hoogte onderste stroomdraad (F3)				24 m	
			Hoogte		Excentriciteit ophanging t.o.v. hart mast
Bliksemdraad = GW / (H_{mast} -		0,57 m =	49,43 m		0,76 m
1e traverse - 380C1F1	F2 +	8,5 m =	41 m		0 m
1e traverse - 150C1F1			41		5,5 m
2e traverse - 380C1F2	F3 +	8,5 m =	32,5 m		0 m
2e traverse - 150C1F2	F3 +		32,5 m		5,5 m
3e traverse - 380C1F3			24 m		0 m
3e traverse - 150C1F3			24		5,5 m
Passieve lijn = Comp C	F3 -	7,5 m =	16,5 m		2,05 m

Uit mast (excl belastingsfactoren)			Uit lijnen (incl belastingsfactoren)				
N	V	M	Nmin	Nmax	Vmax	Mlangs;ma	Mdwars;max
[kN]	[kN]	[kNm]	[kN]	[kN]	[kN]	[kNm]	[kNm]
857	115	3123					
857	115	3123	55	138	865	27696	9474

				Belastingen uit lijnen					Belasting uit mast		
				M_{langs}	M_{dwars}	N	V_{langs}	V_{dwars}	N	V	M
Perm load 1,2	0 deg	1a		3538	4155	110	109	127	857	115	3123
		1b		4278	4859	108	132	149	857	22	586
			3	4287	5149	134	132	158	857	32	878
			4	1585	4464	117	47	137	857	22	586
			6	3860	4497	124	119	138			
	45 deg	1a		2352	6307	113	72	193	857	115	3123
		1b		4148	5448	109	128	167	857	22	586
			3	3381	7101	136	104	219	857	32	878
			4	1502	5047	117	44	155	857	22	586
	90 deg	1a		3804	8983	114	115	275	857	115	3123
		1b		4285	6126	109	132	188	857	22	586
			3	4371	9474	138	132	292	857	32	878
			4	1702	5716	117	50	175	857	22	586
	-45 deg	1a		4823	6398	111	147	196	857	115	3123
		1b		4405	5474	108	135	168	857	22	586
			3	5193	7175	134	159	221	857	32	878
			4	1727	5076	117	51	156	857	22	586
	0 deg	1a		2853	3329	82	88	102	643	115	3123
		1b		3584	4006	80	110	123	643	22	586
			3	3629	4358	106	112	134	643	32	878
			4	723	3650	88	20	112	643	22	586
			6	2854	3280	82	88	100			
	45 deg	1a		1298	5613	85	40	172	643	115	3123
		1b		3392	4613	81	104	142	643	22	586
			3	2476	6389	109	76	197	643	32	878
			4	616	4246	89	17	130	643	22	586
	90 deg	1a		3279	8484	86	99	260	643	115	3123
		1b		3603	5334	82	111	164	643	22	586
			3	3798	8904	110	115	275	643	32	878
			4	933	4951	89	26	152	643	22	586
	-45 deg	1a		4592	5708	83	140	175	643	115	3123
		1b		3778	4639	80	116	143	643	22	586
			3	4819	**6464**	**106**	147	**199**	643	32	878
			4	**944**	4278	88	**27**	131	643	22	586
	0 deg	1a		19368	**2323**	77	605	**70**	857	115	3123
		1b		22967	2716	78	718	82	857	22	586
			3	24003	2870	93	753	87	857	32	878
			4	19882	2363	77	621	71	857	22	586
			6	21191	2514	86	662	76			
	45 deg	1a		20250	3208	76	632	97	857	115	3123
		1b		23038	2965	78	720	90	857	22	586
			3	24610	3671	93	772	111	857	32	878
			4	19951	2612	77	624	79	857	22	586
	90 deg	1a		24380	4934	**74**	757	150	857	115	3123
		1b		23519	3406	77	734	103	857	22	586
			3	**27696**	5193	91	**865**	158	857	32	878
			4	20422	3052	76	638	92	857	22	586
	-45 deg	1a		21514	3823	75	670	116	857	115	3123
		1b		23167	3125	78	724	95	857	22	586
			3	25523	4214	92	799	128	857	32	878
			4	20077	2772	77	627	84	857	22	586
	0 deg	1a		15503	1861	58	485	56	643	115	3123
		1b		18984	2240	59	593	68	643	22	586
			3	20304	2427	74	638	73	643	32	878
			4	15983	1897	58	500	57	643	22	586
			6	15504	1834	58	485	55			
	45 deg	1a		16780	2790	57	523	85	643	115	3123
		1b		19100	2495	59	596	76	643	22	586
			3	21136	3253	74	663	99	643	32	878
			4	16095	2151	58	503	65	643	22	586
	90 deg	1a		22033	4644	55	683	141	643	115	3123
		1b		19807	2961	58	618	90	643	22	586
			3	25015	4865	72	781	149	643	32	878
			4	16784	2616	57	524	79	643	22	586
	-45 deg	1a		18477	3454	56	574	105	643	115	3123
		1b		19295	2662	59	602	81	643	22	586
			3	22324	3827	73	699	117	643	32	878
			4	16285	2318	58	509	70	643	22	586

regel				Totaal							
			Loadcase	M_{langs}	M_{dwars}	N	V_{langs}	V_{dwars}	Totaal moment		
1	Perm load 1,2	0 deg	1a	6661	4155	967	224	127	7851,188	1	
2	Perm load 1,2	0 deg	1b	4864	4859	965	153	149	6874,803	2	
3	Perm load 1,2	0 deg	3	5165	5149	991	164	158	7293,288	3	
4	Perm load 1,2	0 deg	4	2170	4464	974	68	137	4963,084	4	
5	Perm load 1,2	0 deg	6							5	
6										6	
7	Perm load 1,2	45 deg	1a	4560	8516	970	154	275	9659,871	7	
8	Perm load 1,2	45 deg	1b	4562	5862	966	143	182	7428,221	8	
9	Perm load 1,2	45 deg	3	4002	7722	993	126	242	8697,849	9	
10	Perm load 1,2	45 deg	4	1916	5461	974	59	170	5787,618	10	
11										11	
12	Perm load 1,2	90 deg	1a	3804	12106	971	115	390	12689,9	12	x x
13	Perm load 1,2	90 deg	1b	4285	6712	966	132	210	7963,13	13	
14	Perm load 1,2	90 deg	3	4371	10353	995	132	324	11237,54	14	x
15	Perm load 1,2	90 deg	4 Construc	1702	6302	974	50	197	6527,773	15	
16										16	
17	Perm load 1,2	-45 deg	1a	7031	8606	968	229	277	11113,25	17	
18	Perm load 1,2	-45 deg	1b	4819	5888	965	151	183	7608,991	18	
19	Perm load 1,2	-45 deg	3	5814	7796	991	182	244	9725,04	19	
20	Perm load 1,2	-45 deg	4	2141	5490	974	66	171	5893,147	20	
21										21	
22	Perm load 0,9	0 deg	1a	5976	3329	725	203	102	6840,812	22	
23	Perm load 0,9	0 deg	1b	4170	4006	723	132	123	5782,588	23	
24	Perm load 0,9	0 deg	3	4507	4358	748	144	134	6269,477	24	
25	Perm load 0,9	0 deg	4	1309	3650	731	42	112	3877,086	25	
26	Perm load 0,9	0 deg	6							26	
27										27	
28	Perm load 0,9	45 deg	1a	3506	7821	728	121	253	8571,137	28	
29	Perm load 0,9	45 deg	1b	3806	5027	724	120	157	6305,596	29	
30	Perm load 0,9	45 deg	3	3097	7010	751	99	220	7663,605	30	
31	Perm load 0,9	45 deg	4 Construc	1030	4660	731	32	146	4772,434	31	
32										32	
33	Perm load 0,9	90 deg	1a	3279	11607	729	99	375	12061,52	33	
34	Perm load 0,9	90 deg	1b	3603	5920	724	111	185	6929,981	34	
35	Perm load 0,9	90 deg	3	3798	9783	753	115	307	10493,94	35	
36	Perm load 0,9	90 deg	4	933	5536	732	26	174	5614,576	36	
37										37	
38	Perm load 0,9	-45 deg	1a	6800	7916	725	221	256	10435,67	38	
39	Perm load 0,9	-45 deg	1b	4192	5053	723	131	158	6565,867	39	
40	Perm load 0,9	-45 deg	3	5441	7085	749	170	222	8932,83	40	
41	Perm load 0,9	-45 deg	4	1358	4692	731	42	147	4884,28	41	
42										42	
43	Perm load 1,2	0 deg	1a	22491	2323	934	720	70	22610,98	43	
44	Perm load 1,2	0 deg	1b	23553	2716	935	739	82	23708,9	44	
45	Perm load 1,2	0 deg	3	24882	2870	950	786	87	25046,59	45	
46	Perm load 1,2	0 deg	4	20467	2363	934	643	71	20603,19	46	
47	Perm load 1,2	0 deg	6							47	
48										48	
49	Perm load 1,2	45 deg	1a	22458	5416	933	713	178	23102,14	49	
50	Perm load 1,2	45 deg	1b	23452	3380	935	735	105	23694,44	50	
51	Perm load 1,2	45 deg	3	25232	4292	950	794	134	25593,97	51	
52	Perm load 1,2	45 deg	4	20365	3026	934	639	94	20588,49	52	
53										53	
54	Perm load 1,2	90 deg	1a	24380	8057	931	757	265	25676,29	54	
55	Perm load 1,2	90 deg	1b	23519	3992	934	734	125	23855,1	55	
56	Perm load 1,2	90 deg	3	27696	6071	948	865	191	28353,3	56	x x x
57	Perm load 1,2	90 deg	4 Construc	20422	3638	933	638	114	20743,47	57	
58										58	
59	Perm load 1,2	-45 deg	1a	23723	6031	932	751	197	24477,29	59	
60	Perm load 1,2	-45 deg	1b	23581	3539	935	739	110	23845,58	60	
61	Perm load 1,2	-45 deg	3	26145	4835	949	822	151	26587,85	61	
62	Perm load 1,2	-45 deg	4	20491	3186	934	643	99	20737,6	62	
63										63	
64	Perm load 0,9	0 deg	1a	18626	1861	701	600	56	18718,39	64	
65	Perm load 0,9	0 deg	1b	19570	2240	702	615	68	19697,58	65	
66	Perm load 0,9	0 deg	3	21183	2427	717	670	73	21321,39	66	
67	Perm load 0,9	0 deg	4	16568	1897	701	521	57	16676,7	67	
68	Perm load 0,9	0 deg	6							68	
69										69	
70	Perm load 0,9	45 deg	1a	18989	4999	700	604	166	19635,67	70	
71	Perm load 0,9	45 deg	1b	19514	2909	702	612	91	19730,08	71	
72	Perm load 0,9	45 deg	3	21757	3874	717	686	122	22099,14	72	
73	Perm load 0,9	45 deg	4 Construc	16510	2565	701	518	80	16707,65	73	
74										74	
75	Perm load 0,9	90 deg	1a	22033	7767	698	683	256	23362,28	75	
76	Perm load 0,9	90 deg	1b	19807	3547	701	618	111	20122,52	76	
77	Perm load 0,9	90 deg	3	25015	5743	715	781	181	25665,36	77	
78	Perm load 0,9	90 deg	4	16784	3201	700	524	101	17086,71	78	
79										79	
80	Perm load 0,9	-45 deg	1a	20685	5663	699	656	186	21445,97	80	
81	Perm load 0,9	-45 deg	1b	19709	3076	702	618	96	19947,8	81	
82	Perm load 0,9	-45 deg	3	22945	4448	716	722	139	23372,13	82	
83	Perm load 0,9	-45 deg	4	16699	2732	701	524	85	16920,93	83	
				27696	12106	995	865	390	28353		

samenvatting

	Mast	Bijlage		Wind	Loadcase	M_{langs}	M_{dwars}	N	V_{langs}	V_{dwars}
12	W4H400Z	26-AL1	Perm load	90 deg	1a	3804	12106	971	115	390
14	W4H400Z	26-AL1	Perm load	90 deg	3	4371	10353	995	132	324
56	W4H400Z	26-AL1	Perm load	90 deg	3	27696	6071	948	865	191

W4H4002 Appendix AL1**date: 23-11-2012)**
Loadcases for tower strength (Special limit state)

Loadcase according to 50341-3-15

			AHEAD			**BACK**		Totaal			Belastingen op mastvoet, per lijn						Belasting op mastvoet, belastinggeval				
		[N]	[N]	[N]	[N]	[N]	[N]	Vert	Dwars	Langs	M_{langs}	M_{dwars}	N	V_{langs}	V_{dwars}		M_{langs}	M_{dwars}	N	V_{langs}	V_{dwars}
	Attachment point							[kN]	[kN]	[kN]											
1a	Comp. gl	4995	4572	39634	2471	4580	-39671	7,466	9,152	-0,037	-0,6105	166,3133	7,466	-0,037	9,152	1a	3538,335	4155,45	110,294	108,863	127,138
Wind, 10 (	GW / opgv	2408	2218	19129	1416	2219	-19147	3,824	4,437	-0,018	-0,88974	222,2272	3,824	-0,018	4,437	Wind angle: 0 dgr					
Permaner	380C1F1	18432	16830	145795	9348	16843	-145938	27,78	33,673	-0,143	-5,863	1380,593	27,78	-0,143	33,673						
Wind angl	380C1F2	18432	16816	145796	9961	16832	-145939	28,393	33,648	-0,143	-4,6475	1093,56	28,393	-0,143	33,648						
	380C1F3	18432	16799	145796	10575	16818	-145939	29,007	33,617	-0,143	-3,432	806,808	29,007	-0,143	33,617						
	150C1F1	4608	4207	36449	0	0	0	4,608	4,207	36,449	1494,409	197,831	4,608	36,449	4,207						
	150C1F2	4608	4204	36449	0	0	0	4,608	4,204	36,449	1184,593	161,974	4,608	36,449	4,204						
	150C1F3	4608	4200	36449	0	0	0	4,608	4,2	36,449	874,776	126,144	4,608	36,449	4,2						
1b	Comp. gl	5072	5236	45788	2218	5224	-45669	7,29	10,46	0,119	1,9635	187,5345	7,29	0,119	10,46	1b	4278,163	4858,712	108,417	131,66	149,046
Wind, -20	GW / opgv	2449	2563	22385	1319	2555	-22319	3,768	5,118	0,066	3,26238	255,8464	3,768	0,066	5,118	Wind angle: 0 dgr					
Permaner	380C1F1	18776	19805	173171	8257	19743	-172639	27,033	39,548	0,532	21,812	1621,468	27,033	0,532	39,548						
Wind angl	380C1F2	18776	19800	173171	8983	19740	-172639	27,759	39,54	0,532	17,29	1285,05	27,759	0,532	39,54						
	380C1F3	18776	19795	173172	9709	19735	-172640	28,485	39,53	0,532	12,768	948,72	28,485	0,532	39,53						
	150C1F1	4694	4951	43293	0	0	0	4,694	4,951	43,293	1775,013	228,808	4,694	43,293	4,951						
	150C1F2	4694	4950	43293	0	0	0	4,694	4,95	43,293	1407,023	186,692	4,694	43,293	4,95						
	150C1F3	4694	4949	43293	0	0	0	4,694	4,949	43,293	1039,032	144,593	4,694	43,293	4,949						
3	Comp. gl	8339	7174	62185	4337	7196	-62322	12,676	14,37	-0,137	-2,2605	263,0908	12,676	-0,137	14,37	3	4286,622	5149,289	133,857	131,863	158,126
Wind+ice,	GW / opgv	4080	3541	30550	2475	3547	-30616	6,555	7,088	-0,066	-3,26238	355,3416	6,555	-0,066	7,088	Wind angle: 0 dgr					
Permaner	380C1F1	21501	20259	176140	10592	20258	-176153	32,093	40,517	-0,013	-0,533	1661,197	32,093	-0,013	40,517						
Wind angl	380C1F2	21501	20247	176141	11333	20249	-176154	32,834	40,496	-0,013	-0,4225	1316,12	32,834	-0,013	40,496						
	380C1F3	21501	20233	176141	12073	20237	-176154	33,574	40,47	-0,013	-0,312	971,28	33,574	-0,013	40,47						
	150C1F1	5375	5065	44035	0	0	0	5,375	5,065	44,035	1805,435	237,2275	5,375	44,035	5,065						
	150C1F2	5375	5062	44035	0	0	0	5,375	5,062	44,035	1431,138	194,0775	5,375	44,035	5,062						
	150C1F3	5375	5058	44035	0	0	0	5,375	5,058	44,035	1056,84	150,9545	5,375	44,035	5,058						
4	Comp. gl	5006	4637	40530	3267	5641	-49330	8,273	10,278	-8,8	-145,2	186,5467	8,273	-8,8	10,278	4	1584,504	4463,521	116,635	46,733	136,824
Constructi	GW / opgv	2414	2245	19597	1869	2751	-24034	4,283	4,996	-4,437	-219,321	250,2074	4,283	-4,437	4,996	Wind angle: 0 dgr					
Permaner	380C1F1	18481	17129	149696	10889	19115	-167130	29,37	36,244	-17,434	-714,794	1486,004	29,37	-17,434	36,244						
Wind angl	380C1F2	18481	17124	149697	11592	19112	-167131	30,073	36,236	-17,434	-566,605	1177,67	30,073	-17,434	36,236						
	380C1F3	18481	17119	149697	12295	19108	-167131	30,776	36,227	-17,434	-418,416	869,448	30,776	-17,434	36,227						
	150C1F1	4620	4282	37424	0	0	0	4,62	4,282	37,424	1534,384	200,972	4,62	37,424	4,282						
	150C1F2	4620	4281	37424	0	0	0	4,62	4,281	37,424	1216,28	164,5425	4,62	37,424	4,281						
	150C1F3	4620	4280	37424	0	0	0	4,62	4,28	37,424	898,176	128,13	4,62	37,424	4,28						
6	Comp. gl	5605	4953	43449	2827	4960	-43513	8,432	9,913	-0,064	-1,056	180,8501	8,432	-0,064	9,913	6	3860,459	4497,071	124,402	118,768	137,5
Permaner	GW / opgv	2703	2392	20985	1609	2396	-21016	4,312	4,788	-0,031	-1,53233	239,948	4,312	-0,031	4,788	0					
Permaner	380C1F1	20680	18180	159484	10698	18208	-159734	31,378	36,388	-0,25	-10,25	1491,908	31,378	-0,25	36,388						
	380C1F2	20680	18180	159484	11369	18208	-159734	32,049	36,388	-0,25	-8,125	1182,61	32,049	-0,25	36,388						
	380C1F3	20680	18180	159484	12041	18208	-159734	32,721	36,388	-0,25	-6	873,312	32,721	-0,25	36,388						
	150C1F1	5170	4545	39871	0	0	0	5,17	4,545	39,871	1634,711	214,78	5,17	39,871	4,545						
	150C1F2	5170	4545	39871	0	0	0	5,17	4,545	39,871	1295,808	176,1475	5,17	39,871	4,545						
	150C1F3	5170	4545	39871	0	0	0	5,17	4,545	39,871	956,904	137,515	5,17	39,871	4,545						
1a	Comp. gl	4958	6356	41414	2807	7959	-45480	7,765	14,315	-4,066	-67,089	252,1158	7,765	-4,066	14,315	1a	2351,823	6307,481	113,073	72,238	193,281
Wind, 10 (	GW / opgv	2375	3505	20875	1582	4413	-23585	3,957	7,918	-2,71	-133,955	394,3941	3,957	-2,71	7,918	Wind angle: 45 dgr					
Permaner	380C1F1	18280	23778	152859	10501	28806	-165602	28,781	52,584	-12,743	-522,463	2155,944	28,781	-12,743	52,584						
Wind angl	380C1F2	18298	23253	151948	10908	28034	-163640	29,206	51,287	-11,692	-379,99	1666,828	29,206	-11,692	51,287						
	380C1F3	18318	22631	150930	11323	27130	-161415	29,641	49,761	-10,485	-251,64	1194,264	29,641	-10,485	49,761						
	150C1F1	4570	5945	38215	0	0	0	4,57	5,945	38,215	1566,815	268,88	4,57	38,215	5,945						
	150C1F2	4574	5813	37987	0	0	0	4,574	5,813	37,987	1234,578	214,0795	4,574	37,987	5,813						
	150C1F3	4579	5658	37732	0	0	0	4,579	5,658	37,732	905,568	160,9765	4,579	37,732	5,658						
1b	Comp. gl	5067	5739	45932	2268	6125	-46244	7,335	11,864	-0,312	-5,148	210,7928	7,335	-0,312	11,864	1b	4148,178	5448,069	108,851	127,678	167,182
Wind, -20	GW / opgv	2445	2916	22544	1348	3129	-22799	3,793	6,045	-0,255	-12,6047	301,687	3,793	-0,255	6,045	Wind angle: 45 dgr					
Permaner	380C1F1	18755	21759	173742	8436	22950	-174546	27,191	44,709	-0,804	-32,964	1833,069	27,191	-0,804	44,709						
Wind angl	380C1F2	18758	21619	173656	9126	22756	-174326	27,884	44,375	-0,67	-21,775	1442,188	27,884	-0,67	44,375						
	380C1F3	18761	21453	173562	9819	22528	-174083	28,58	43,981	-0,521	-12,504	1055,544	28,58	-0,521	43,981						
	150C1F1	4689	5440	43435	0	0	0	4,689	5,44	43,435	1780,835	248,8295	4,689	43,435	5,44						
	150C1F2	4689	5405	43414	0	0	0	4,689	5,405	43,414	1410,955	201,452	4,689	43,414	5,405						
	150C1F3	4690	5363	43391	0	0	0	4,69	5,363	43,391	1041,384	154,507	4,69	43,391	5,363						
3	Comp. gl	8285	9921	64417	4835	12326	-69755	13,12	22,247	-5,338	-88,077	393,9715	13,12	-5,338	22,247	3	3380,928	7101,384	136,316	103,581	218,652
Wind+ice,	GW / opgv	4031	5510	32739	2725	6861	-36285	6,756	12,371	-3,546	-175,279	616,6331	6,756	-3,546	12,371	Wind angle: 45 dgr					

Permaner	380C1F1	21391	26025	180420	11479	30037	-188660	32,87	56,062	-8,24	-337,84	2298,542	32,87	-8,24	56,062
Wind angl	380C1F2	21405	25598	179849	12054	29416	-187350	33,459	55,014	-7,501	-243,783	1787,955	33,459	-7,501	55,014
	380C1F3	21420	25091	179214	12637	28689	-185878	34,057	53,78	-6,664	-159,936	1290,72	34,057	-6,664	53,78
	150C1F1	5348	6506	45105	0	0	0	5,348	6,506	45,105	1849,305	296,16	5,348	45,105	6,506
	150C1F2	5351	6399	44962	0	0	0	5,351	6,399	44,962	1461,265	237,398	5,351	44,962	6,399
	150C1F3	5355	6273	44803	0	0	0	5,355	6,273	44,803	1075,272	180,0045	5,355	44,803	6,273
4	Comp. gl	5002	5139	40669	3298	6520	-49706	8,3	11,659	-9,037	-149,111	209,3885	8,3	-9,037	11,659
Constructi	GW / opgv	2410	2598	19751	1887	3306	-24350	4,297	5,904	-4,599	-227,329	295,1004	4,297	-4,599	5,904
Permaner	380C1F1	18464	19082	150254	11012	22275	-168616	29,476	41,357	-18,362	-752,842	1695,637	29,476	-18,362	41,357
Wind angl	380C1F2	18466	18943	150170	11690	22087	-168440	30,156	41,03	-18,27	-593,775	1333,475	30,156	-18,27	41,03
	380C1F3	18468	18777	150078	12371	21864	-168246	30,839	40,641	-18,168	-436,032	975,384	30,839	-18,168	40,641
	150C1F1	4616	4771	37563	0	0	0	4,616	4,771	37,563	1540,083	220,999	4,616	37,563	4,771
	150C1F2	4617	4736	37542	0	0	0	4,617	4,736	37,542	1220,115	179,3135	4,617	37,542	4,736
	150C1F3	4617	4694	37519	0	0	0	4,617	4,694	37,519	900,456	138,0495	4,617	37,519	4,694
1a	Comp. gl	4834	9851	49867	3098	10504	-52907	7,932	20,355	-3,04	-50,16	352,1181	7,932	-3,04	20,355
Wind, 10 (	GW / opgv	2295	6054	27943	1696	6052	-28704	3,991	12,106	-0,761	-37,6162	601,4327	3,991	-0,761	12,106
Permaner	380C1F1	17795	37362	185712	11526	37778	-191001	29,321	75,14	-5,289	-216,849	3080,74	29,321	-5,289	75,14
Wind angl	380C1F2	17846	35792	181367	11791	36434	-186982	29,637	72,226	-5,615	-182,488	2347,345	29,637	-5,615	72,226
	380C1F3	17909	33927	176323	12059	34856	-182335	29,968	68,783	-6,012	-144,288	1650,792	29,968	-6,012	68,783
	150C1F1	4449	9341	46428	0	0	0	4,449	9,341	46,428	1903,548	407,4505	4,449	46,428	9,341
	150C1F2	4461	8948	45342	0	0	0	4,461	8,948	45,342	1473,615	315,3455	4,461	45,342	8,948
	150C1F3	4477	8482	44081	0	0	0	4,477	8,482	44,081	1057,944	228,1915	4,477	44,081	8,482
1b	Comp. gl	5043	6628	46909	2342	6758	-47219	7,385	13,386	-0,31	-5,115	236,0083	7,385	-0,31	13,386
Wind, -20	GW / opgv	2422	3562	23513	1388	3542	-23576	3,81	7,104	-0,063	-3,11409	354,0463	3,81	-0,063	7,104
Permaner	380C1F1	18651	25221	177586	8700	25189	-177805	27,351	50,41	-0,219	-8,979	2066,81	27,351	-0,219	50,41
Wind angl	380C1F2	18666	24824	177001	9340	24852	-177239	28,006	49,676	-0,238	-7,735	1614,47	28,006	-0,238	49,676
	380C1F3	18683	24353	176351	9985	24458	-176607	28,668	48,811	-0,256	-6,144	1171,464	28,668	-0,256	48,811
	150C1F1	4663	6305	44397	0	0	0	4,663	6,305	44,397	1820,277	284,1515	4,663	44,397	6,305
	150C1F2	4666	6206	44250	0	0	0	4,666	6,206	44,25	1438,125	227,358	4,666	44,25	6,206
	150C1F3	4671	6088	44088	0	0	0	4,671	6,088	44,088	1058,112	171,8025	4,671	44,088	6,088
3	Comp. gl	8099	15160	75361	5286	16112	-79481	13,385	31,272	-4,12	-67,98	543,4273	13,385	-4,12	31,272
Wind+ice,	GW / opgv	3906	9314	41944	2907	9296	-43017	6,813	18,61	-1,073	-53,0384	925,0702	6,813	-1,073	18,61
Permaner	380C1F1	20965	37018	202705	12449	37288	-206477	33,414	74,306	-3,772	-154,652	3046,546	33,414	-3,772	74,306
Wind angl	380C1F2	21016	35741	199601	12870	36195	-203562	33,886	71,936	-3,961	-128,733	2337,92	33,886	-3,961	71,936
	380C1F3	21077	34228	196051	13299	34915	-200233	34,376	69,143	-4,182	-100,368	1659,432	34,376	-4,182	69,143
	150C1F1	5241	9254	50676	0	0	0	5,241	9,254	50,676	2077,716	408,2395	5,241	50,676	9,254
	150C1F2	5254	8935	49900	0	0	0	5,254	8,935	49,9	1621,75	319,2845	5,254	49,9	8,935
	150C1F3	5269	8557	49013	0	0	0	5,269	8,557	49,013	1176,312	234,3475	5,269	49,013	8,557
4	Comp. gl	4982	6026	41619	3347	7119	-50382	8,329	13,145	-8,763	-144,59	233,967	8,329	-8,763	13,145
Constructi	GW / opgv	2392	3241	20691	1913	3693	-24892	4,305	6,934	-4,201	-207,655	346,0194	4,305	-4,201	6,934
Permaner	380C1F1	18379	22538	154029	11197	24444	-171247	29,576	46,982	-17,218	-705,938	1926,262	29,576	-17,218	46,982
Wind angl	380C1F2	18392	22142	153454	11840	24119	-170787	30,232	46,261	-17,333	-563,323	1503,483	30,232	-17,333	46,261
	380C1F3	18405	21673	152815	12486	23739	-170275	30,891	45,412	-17,46	-419,04	1089,888	30,891	-17,46	45,412
	150C1F1	4595	5634	38507	0	0	0	4,595	5,634	38,507	1578,787	256,2665	4,595	38,507	5,634
	150C1F2	4598	5536	38364	0	0	0	4,598	5,536	38,364	1246,83	205,209	4,598	38,364	5,536
	150C1F3	4601	5418	38204	0	0	0	4,601	5,418	38,204	916,896	155,3375	4,601	38,204	5,418
1a	Comp. gl	4913	7599	43986	2629	6554	-42102	7,542	14,153	1,884	31,086	248,9856	7,542	1,884	14,153
Wind, 10 (	GW / opgv	2342	4421	23176	1500	3494	-21080	3,842	7,915	2,096	103,6053	394,1584	3,842	2,096	7,915
Permaner	380C1F1	18102	28621	162955	9887	23850	-154129	27,989	52,471	8,826	361,866	2151,311	27,989	8,826	52,471
Wind angl	380C1F2	18136	27717	160880	10398	23403	-153254	28,534	51,12	7,626	247,845	1661,4	28,534	7,626	51,12
	380C1F3	18176	26649	158526	10915	22880	-152275	29,091	49,529	6,251	150,024	1188,696	29,091	6,251	49,529
	150C1F1	4526	7155	40739	0	0	0	4,526	7,155	40,739	1670,299	318,248	4,526	40,739	7,155
	150C1F2	4534	6929	40220	0	0	0	4,534	6,929	40,22	1307,15	250,1295	4,534	40,22	6,929
	150C1F3	4544	6662	39631	0	0	0	4,544	6,662	39,631	951,144	184,88	4,544	39,631	6,662
1b	Comp. gl	5060	6061	46194	2238	5770	-45880	7,298	11,831	0,314	5,181	210,1724	7,298	0,314	11,831
Wind, -20	GW / opgv	2438	3147	22812	1331	2900	-22500	3,769	6,047	0,312	15,42216	301,7677	3,769	0,312	6,047
Permaner	380C1F1	18725	23011	174777	8330	21690	-173333	27,055	44,701	1,444	59,204	1832,741	27,055	1,444	44,701
Wind angl	380C1F2	18732	22781	174552	9041	21573	-173248	27,773	44,354	1,304	42,38	1441,505	27,773	1,304	44,354
	380C1F3	18739	22507	174305	9753	21436	-173154	28,492	43,943	1,151	27,624	1054,632	28,492	1,151	43,943
	150C1F1	4681	5753	43694	0	0	0	4,681	5,753	43,694	1791,454	261,6185	4,681	43,694	5,753
	150C1F2	4683	5695	43638	0	0	0	4,683	5,695	43,638	1418,235	210,844	4,683	43,638	5,695
	150C1F3	4685	5627	43576	0	0	0	4,685	5,627	43,576	1045,824	160,8155	4,685	43,576	5,627
3	Comp. gl	8219	11794	67714	4568	10222	-65396	12,787	22,016	2,318	38,247	389,4774	12,787	2,318	22,016
Wind+ice,	GW / opgv	3981	6881	35697	2600	5491	-33052	6,581	12,372	2,645	130,7424	616,5495	6,581	2,645	12,372
Permaner	380C1F1	21250	29941	186949	10983	26047	-181165	32,233	55,988	5,784	237,144	2295,508	32,233	5,784	55,988
Wind angl	380C1F2	21278	29212	185580	11647	25686	-180611	32,925	54,898	4,969	161,4925	1784,185	32,925	4,969	54,898
0	380C1F3	21311	28350	184044	12317	25262	-179994	33,628	53,612	4,05	97,2	1286,688	33,628	4,05	53,612
	150C1F1	5312	7485	46737	0	0	0	5,312	7,485	46,737	1916,217	336,101	5,312	46,737	7,485
	150C1F2	5319	7303	46395	0	0	0	5,319	7,303	46,395	1507,838	266,602	5,319	46,395	7,303
	150C1F3	5328	7087	46011	0	0	0	5,328	7,087	46,011	1104,264	199,392	5,328	46,011	7,087
4	Comp. gl	4996	5460	40924	3279	6178	-49460	8,275	11,638	-8,536	-140,844	208,9908	8,275	-8,536	11,638
Constructi	GW / opgv	2405	2828	20010	1876	3088	-24148	4,281	5,916	-4,138	-204,541	295,6814	4,281	-4,138	5,916
Permaner	380C1F1	18440	20333	151269	10939	21043	-167653	29,379	41,376	-16,384	-671,744	1696,416	29,379	-16,384	41,376
Wind angl	380C1F2	18445	20103	151049	11632	20929	-167586	30,077	41,032	-16,537	-537,453	1333,54	30,077	-16,537	41,032
	380C1F3	18451	19829	150806	12325	20794	-167513	30,776	40,623	-16,707	-400,968	974,952	30,776	-16,707	40,623
	150C1F1	4610	5083	37817	0	0	0	4,61	5,083	37,817	1550,497	233,758	4,61	37,817	5,083
	150C1F2	4611	5026	37762	0	0	0	4,611	5,026	37,762	1227,265	188,7055	4,611	37,762	5,026
	150C1F3	4613	4957	37701	0	0	0	4,613	4,957	37,701	904,824	144,3395	4,613	37,701	4,957
1a	Comp. gl	3769	3652	31563	1778	3654	-31546	5,547	7,306	0,017	0,2805	131,9204	5,547	0,017	7,306
Wind, 10 (	GW / opgv	1817	1771	15207	1036	1769	-15199	2,853	3,54	0,008	0,39544	177,1505	2,853	0,008	3,54
Permanentloa	380C1F1 / 38(	13916	13520	116761	6715	13510	-116695	20,631	27,03	0,066	2,706	1108,23	20,631	0,066	27,03
Wind angle: 0	380C1F2 / 38(	13916	13506	116761	7206	13498	-116694	21,122	27,004	0,067	2,1775	877,63	21,122	0,067	27,004
	380C1F3 / 38(	13916	13489	116761	7696	13485	-116694	21,612	26,974	0,067	1,608	647,376	21,612	0,067	26,974
	150C1F1 / 15(	3479	3380	29190	0	0	0	3,479	3,38	29,19	1196,79	157,7145	3,479	29,19	3,38
	150C1F2 / 15(	3479	3376	29190	0	0	0	3,479	3,376	29,19	948,675	128,8545	3,479	29,19	3,376
	150C1F3 / 15(	3479	3372	29190	0	0	0	3,479	3,372	29,19	700,56	100,0625	3,479	29,19	3,372
1b	Comp. gl	3843	4279	37396	1539	4259	-37203	5,382	8,538	0,193	3,1845	151,9101	5,382	0,193	8,538
Wind, -20 dgr	GW / opgw	1856	2096	18286	945	2084	-18183	2,801	4,18	0,103	5,09129	208,7462	2,801	0,103	4,18
Permanentloa	380C1F1 / 38(	14252	16398	143288	5665	16300	-142435	19,917	32,698	0,853	34,973	1340,618	19,917	0,853	32,698
Wind angle: 0	380C1F2 / 38(	14252	16394	143289	6263	16297	-142435	20,515	32,691	0,854	27,755	1062,458	20,515	0,854	32,691
	380C1F3 / 38(	14252	16389	143289	6862	16292	-142435	21,114	32,681	0,854	20,496	784,344	21,114	0,854	32,681
	150C1F1 / 15(	3563	4100	35822	0	0	0	3,563	4,1	35,822	1468,702	187,6965	3,563	35,822	4,1
	150C1F2 / 15(	3563	4098	35822	0	0	0	3,563	4,098	35,822	1164,215	152,7815	3,563	35,822	4,098
	150C1F3 / 15(	3563	4097	35822	0	0	0	3,563	4,097	35,822	859,728	117,9245	3,563	35,822	4,097
3	Comp. gl	7128	6390	55305	3593	6405	-55382	10,721	12,795	-0,077	-1,2705	233,0956	10,721	-0,077	12,795
Wind+ice, -5 (	GW / opgw	3496	3161	27210	2078	3163	-27246	5,574	6,324	-0,036	-1,77948	316,8316	5,574	-0,036	6,324
Permanentloa	380C1F1 / 38(	16998	17060	148077	7922	17031	-147844	24,92	34,091	0,233	9,553	1397,731	24,92	0,233	34,091
Wind angle: 0	380C1F2 / 38(	16998	17048	148078	8543	17022	-147844	25,541	34,07	0,234	7,605	1107,275	25,541	0,234	34,07
	380C1F3 / 38(	16998	17034	148078	9165	17010	-147844	26,163	34,044	0,234	5,616	817,056	26,163	0,234	34,044
	150C1F1 / 15(	4249	4265	37019	0	0	0	4,249	4,265	37,019	1517,779	198,2345	4,249	37,019	4,265
	150C1F2 / 15(	4249	4262	37019	0	0	0	4,249	4,262	37,019	1203,118	161,8845	4,249	37,019	4,262
	150C1F3 / 15(	4249	4258	37020	0	0	0	4,249	4,258	37,02	888,48	125,5615	4,249	37,02	4,258
4	Comp. gl	3779	3709	32388	2548	4783	-41805	6,327	8,492	-9,417	-155,381	153,0884	6,327	-9,417	8,492
Construction/(	GW / opgw	1822	1794	15635	1480	2334	-20379	3,302	4,128	-4,744	-234,496	206,5566	3,302	-4,744	4,128
Permanentloa	380C1F1 / 38(	13962	13791	120415	8207	15920	-139104	22,169	29,711	-18,689	-766,249	1218,151	22,169	-18,689	29,711
Wind angle: 0	380C1F2 / 38(	13962	13787	120416	8791	15917	-139104	22,753	29,704	-18,688	-607,36	965,38	22,753	-18,688	29,704
	380C1F3 / 38(	13962	13782	120416	9376	15913	-139104	23,338	29,695	-18,688	-448,512	712,68	23,338	-18,688	29,695
	150C1F1 / 15(	3491	3448	30104	0	0	0	3,491	3,448	30,104	1234,264	160,5685	3,491	30,104	3,448
	150C1F2 / 15(	3491	3447	30104	0	0	0	3,491	3,447	30,104	978,38	131,228	3,491	30,104	3,447
	150C1F3 / 15(	3491	3445	30104	0	0	0	3,491	3,445	30,104	722,496	101,8805	3,491	30,104	3,445
6	Comp. gl	3769	3598	31565	1777	3596	-31548	5,546	7,194	0,017	0,2805	130,0703	5,546	0,017	7,194
Permanent,+	GW / opgw	1817	1734	15208	1036	1733	-15200	2,853	3,467	0,008	0,39544	173,5421	2,853	0,008	3,467
Permanentloa	380C1F1 / 38(	13917	13311	116772	6714	13303	-116703	20,631	26,614	0,069	2,829	1091,174	20,631	0,069	26,614
	380C1F2 / 38(	13917	13311	116772	7205	13303	-116703	21,122	26,614	0,069	2,2425	864,955	21,122	0,069	26,614
	380C1F3 / 38(	13917	13311	116772	7696	13303	-116703	21,613	26,614	0,069	1,656	638,736	21,613	0,069	26,614
	150C1F1 / 15(	3479	3328	29193	0	0	0	3,479	3,328	29,193	1196,913	155,5825	3,479	29,193	3,328
	150C1F2 / 15(	3479	3328	29193	0	0	0	3,479	3,328	29,193	948,7725	127,2945	3,479	29,193	3,328
	150C1F3 / 15(	3479	3328	29193	0	0	0	3,479	3,328	29,193	700,632	99,0065	3,479	29,193	3,328
1a	Comp. gl	3721	5526	34140	2171	7271	-39447	5,892	12,797	-5,307	-87,5655	223,2291	5,892	-5,307	12,797
Wind, 10 dgr	GW / opgw	1776	3137	17651	1219	4122	-21035	2,995	7,259	-3,384	-167,271	361,0886	2,995	-3,384	7,259
Permanentloa	380C1F1 / 38(	13718	20828	126992	8083	26300	-143630	21,801	47,128	-16,638	-682,158	1932,248	21,801	-16,638	47,128
Wind angle: 4	380C1F2 / 38(	13740	20262	125724	8343	25463	-141105	22,083	45,725	-15,381	-499,883	1486,063	22,083	-15,381	45,725
	380C1F3 / 38(	13765	19593	124294	8608	24483	-138210	22,373	44,076	-13,916	-333,984	1057,824	22,373	-13,916	44,076
	150C1F1 / 15(	3430	5207	31748	0	0	0	3,43	5,207	31,748	1301,668	232,352	3,43	31,748	5,207
	150C1F2 / 15(	3435	5066	31431	0	0	0	3,435	5,066	31,431	1021,508	183,5375	3,435	31,431	5,066
	150C1F3 / 15(	3441	4898	31073	0	0	0	3,441	4,898	31,073	745,752	136,4775	3,441	31,073	4,898
1b	Comp. gl	3836	4792	37632	1610	5194	-38080	5,446	9,986	-0,448	-7,392	175,9333	5,446	-0,448	9,986
Wind, -20 dgr	GW / opgw	1849	2459	18535	985	2685	-18901	2,834	5,144	-0,366	-18,0914	256,4218	2,834	-0,366	5,144
Permanentloa	380C1F1 / 38(	14222	18393	144221	5921	19622	-145358	20,143	38,015	-1,137	-46,617	1558,615	20,143	-1,137	38,015
Wind angle: 4	380C1F2 / 38(	14226	18248	144090	6469	19416	-145033	20,695	37,664	-0,943	-30,6475	1224,08	20,695	-0,943	37,664
	380C1F3 / 38(	14230	18076	143945	7021	19175	-144672	21,251	37,251	-0,727	-17,448	894,024	21,251	-0,727	37,251
	150C1F1 / 15(	3555	4598	36055	0	0	0	3,555	4,598	36,055	1478,255	208,0705	3,555	36,055	4,598
	150C1F2 / 15(	3556	4562	36022	0	0	0	3,556	4,562	36,022	1170,715	167,823	3,556	36,022	4,562
	150C1F3 / 15(	3557	4519	35986	0	0	0	3,557	4,519	35,986	863,664	128,0195	3,557	35,986	4,519
3	Comp. gl	7064	9199	58093	4152	11709	-64343	11,216	20,908	-6,25	-103,125	367,9748	11,216	-6,25	20,908
Wind+ice, -5 (	GW / opgw	3440	5185	29886	2350	6594	-33947	5,79	11,779	-4,061	-200,735	586,6364	5,79	-4,061	11,779
Permanentloa	380C1F1 / 38(	16855	23024	154103	9018	27309	-164740	25,873	50,333	-10,637	-436,117	2063,653	25,873	-10,637	50,333
Wind angle: 4	380C1F2 / 38(	16871	22573	153322	9442	26643	-163040	26,313	49,216	-9,718	-315,835	1599,52	26,313	-9,718	49,216
	380C1F3 / 38(	16891	22039	152451	9873	25865	-161116	26,764	47,904	-8,665	-207,96	1149,696	26,764	-8,665	47,904
	150C1F1 / 15(	4214	5756	38526	0	0	0	4,214	5,756	38,526	1579,566	259,173	4,214	38,526	5,756
	150C1F2 / 15(	4218	5643	38331	0	0	0	4,218	5,643	38,331	1245,758	206,5965	4,218	38,331	5,643
	150C1F3 / 15(	4223	5510	38113	0	0	0	4,223	5,51	38,113	914,712	155,4665	4,223	38,113	5,51
4	Comp. gl	3774	4221	32614	2588	5679	-42331	6,362	9,9	-9,717	-160,331	176,3921	6,362	-9,717	9,9
Construction/(	GW / opgw	1817	2156	15874	1503	2903	-20812	3,32	5,059	-4,938	-244,085	252,5896	3,32	-4,938	5,059
Permanentloa	380C1F1 / 38(	13939	15784	121321	8369	19156	-141259	22,308	34,94	-19,938	-817,458	1432,54	22,308	-19,938	34,94
Wind angle: 4	380C1F2 / 38(	13942	15639	121193	8922	18960	-141013	22,864	34,599	-19,82	-644,15	1124,468	22,864	-19,82	34,599
	380C1F3 / 38(	13945	15468	121052	9477	18729	-140741	23,422	34,197	-19,689	-472,536	820,728	23,422	-19,689	34,197
	150C1F1 / 15(	3485	3946	30330	0	0	0	3,485	3,946	30,33	1243,53	180,9535	3,485	30,33	3,946
	150C1F2 / 15(	3486	3910	30298	0	0	0	3,486	3,91	30,298	984,685	146,248	3,486	30,298	3,91
	150C1F3 / 15(	3486	3867	30263	0	0	0	3,486	3,867	30,263	726,312	111,981	3,486	30,263	3,867
1a	Comp. gl	3594	9286	44917	2432	9993	-48434	6,026	19,279	-3,517	-58,0305	330,4568	6,026	-3,517	19,279
Wind, 10 dgr	GW / opgw	1704	5847	26130	1310	5852	-26952	3,014	11,699	-0,822	-40,6315	580,5722	3,014	-0,822	11,699
Permanentloa	380C1F1 / 38(	13230	35411	168621	9016	35906	-174598	22,246	71,317	-5,977	-245,057	2923,997	22,246	-5,977	71,317
Wind angle: 9	380C1F2 / 38(	13274	33745	163430	9166	34481	-169865	22,44	68,226	-6,435	-209,138	2217,345	22,44	-6,435	68,226
	380C1F3 / 38(	13330	31758	157314	9315	32802	-164327	22,645	64,56	-7,013	-168,312	1549,44	22,645	-7,013	64,56
	150C1F1 / 15(	3308	8853	42155	0	0	0	3,308	8,853	42,155	1728,355	381,167	3,308	42,155	8,853

4	1501,566	5047,347	116,918	44,188	154,792
Wind angle: 45 dgr					
1a	3803,706	8983,415	114,236	115,134	275,381
Wind angle: 90dgr					
1b	4285,427	6126,111	109,22	131,649	187,986
Wind angle: 90dgr					
3	4371,007	9474,267	137,638	132,481	292,013
Wind angle: 90dgr					
4	1701,968	5716,432	117,127	50,1	175,322
Wind angle:					
1a	4823,019	6397,808	110,602	147,273	195,934
Wind angle: -45 dgr					
1b	4405,324	5474,096	108,436	135,433	167,951
Wind angle: -45 dgr					
3	5193,144	7174,503	134,113	158,909	220,761
Wind angle: -45 dgr					
4	1727,036	5076,383	116,622	50,978	155,651
Wind angle: -45 dgr					
1a	2853,192	3328,938	82,202	87,795	101,982
Wind angle: 0 dgr					
1b	3584,145	4006,478	80,418	110,323	123,083
Wind angle: 0 dgr					
3	3629,101	4357,67	105,666	111,646	134,109
Wind angle: 0 dgr					
4	723,1426	3649,533	88,362	20,086	112,07
Wind angle: 0 dgr					
6	2853,721	3280,361	82,202	87,811	100,487
0					
1a	1298,066	5612,819	85,45	39,626	172,156
Wind angle: 45 dgr					
1b	3392,438	4612,987	81,037	104,442	141,739
Wind angle: 45 dgr					
3	2476,263	6388,716	108,611	75,639	197,049
Wind angle: 45 dgr					
4	615,9672	4245,9	88,733	16,789	130,418
Wind angle: 45 dgr					
1a	3278,968	8484,27	86,331	98,578	260,309
Wind angle: 90 dgr					

	150C1F2 / 15(	3319	8436	40858	0	0	0	3,319	8,436	40,858	1327,885	292,4245	3,319	40,858	8,436						
	150C1F3 / 15(	3333	7939	39329	0	0	0	3,333	7,939	39,329	943,896	208,8675	3,333	39,329	7,939						
1b	Comp. gl	3802	5734	39070	1707	5876	-39482	5,509	11,61	-0,412	-6,798	202,8585	5,509	-0,412	11,61	1b	3603,007	5334,148	81,518	110,562	163,855
Wind, -20 dgr	GW / opgw	1820	3152	19921	1036	3134	-19993	2,856	6,286	-0,072	-3,55896	312,8875	2,856	-0,072	6,286	Wind angle: 90 dgr					
Permanentloa	380C1F1 / 38(	14077	22060	149873	6277	22027	-150073	20,354	44,087	-0,2	-8,2	1807,567	20,354	-0,2	44,087						
Wind angle: 9	380C1F2 / 38(	14097	21634	149032	6760	21663	-149266	20,857	43,297	-0,234	-7,605	1407,153	20,857	-0,234	43,297						
	380C1F3 / 38(	14120	21131	148091	7249	21237	-148360	21,369	42,368	-0,269	-6,456	1016,832	21,369	-0,269	42,368						
	150C1F1 / 15(	3519	5515	37468	0	0	0	3,519	5,515	37,468	1536,188	245,4695	3,519	37,468	5,515						
	150C1F2 / 15(	3524	5409	37258	0	0	0	3,524	5,409	37,258	1210,885	195,1745	3,524	37,258	5,409						
	150C1F3 / 15(	3530	5283	37023	0	0	0	3,53	5,283	37,023	888,552	146,207	3,53	37,023	5,283						
3	Comp. gl	6869	14643	70832	4592	15640	-75342	11,461	30,283	-4,51	-74,415	523,1646	11,461	-4,51	30,283	3	3797,95	8904,209	109,86	114,529	274,813
Wind+ice, -5 c	GW / opgw	3318	9119	40232	2517	9107	-41357	5,835	18,226	-1,125	-55,6088	905,3458	5,835	-1,125	18,226	Wind angle: 90 dgr					
Permanentloa	380C1F1 / 38(	16379	34727	182634	10032	35059	-186940	26,411	69,786	-4,306	-176,546	2861,226	26,411	-4,306	69,786						
Wind angle: 9	380C1F2 / 38(	16430	33370	178824	10311	33895	-183406	26,741	67,265	-4,582	-148,915	2186,113	26,741	-4,582	67,265						
	380C1F3 / 38(	16493	31759	174414	10594	32530	-179329	27,087	64,289	-4,915	-117,96	1542,936	27,087	-4,915	64,289						
	150C1F1 / 15(	4095	8682	45658	0	0	0	4,095	8,682	45,658	1871,978	378,4845	4,095	45,658	8,682						
	150C1F2 / 15(	4107	8342	44706	0	0	0	4,107	8,342	44,706	1452,945	293,7035	4,107	44,706	8,342						
	150C1F3 / 15(	4123	7940	43603	0	0	0	4,123	7,94	43,603	1046,472	213,2365	4,123	43,603	7,94						
4	Comp. gl	3747	5157	34001	2649	6304	-43231	6,396	11,461	-9,23	-152,295	202,2183	6,396	-9,23	11,461	4	933,482	4950,869	88,979	26,204	152,037
Construction/	GW / opgw	1793	2843	17207	1535	3308	-21521	3,328	6,151	-4,314	-213,241	306,5732	3,328	-4,314	6,151	Wind angle: 90 dgr					
Permanentloa	380C1F1 / 38(	13826	19437	126836	8605	21437	-144880	22,431	40,874	-18,044	-739,804	1675,834	22,431	-18,044	40,874						
Wind angle: 9	380C1F2 / 38(	13842	19013	126015	9113	21094	-144253	22,955	40,107	-18,238	-592,735	1303,478	22,955	-18,238	40,107						
	380C1F3 / 38(	13860	18512	125096	9626	20692	-143553	23,486	39,204	-18,457	-442,968	940,896	23,486	-18,457	39,204						
	150C1F1 / 15(	3457	4859	31709	0	0	0	3,457	4,859	31,709	1300,069	218,2325	3,457	31,709	4,859						
	150C1F2 / 15(	3461	4753	31504	0	0	0	3,461	4,753	31,504	1023,88	173,508	3,461	31,504	4,753						
	150C1F3 / 15(	3465	4628	31274	0	0	0	3,465	4,628	31,274	750,576	130,1295	3,465	31,274	4,628						
1a	Comp. gl	3670	6870	37598	1979	5746	-35011	5,649	12,616	2,587	42,6855	219,7445	5,649	2,587	12,616	1a	4591,663	5707,748	82,698	139,925	174,94
Wind, 10 dgr	GW / opgw	1743	4124	20570	1139	3129	-17885	2,882	7,253	2,685	132,7196	360,7061	2,882	2,685	7,253	Wind angle: -45 dgr					
Permanentloa	380C1F1 / 38(	13519	26059	140505	7411	20922	-128450	20,93	46,981	12,055	494,255	1926,221	20,93	12,055	46,981						
Wind angle: -	380C1F2 / 38(	13555	25084	137797	7774	20437	-127245	21,329	45,521	10,552	342,94	1479,433	21,329	10,552	45,521						
	380C1F3 / 38(	13598	23930	134685	8141	19871	-125885	21,739	43,801	8,8	211,2	1051,224	21,739	8,8	43,801						
	150C1F1 / 15(	3380	6515	35126	0	0	0	3,38	6,515	35,126	1440,166	285,705	3,38	35,126	6,515						
	150C1F2 / 15(	3389	6271	34449	0	0	0	3,389	6,271	34,449	1119,593	222,447	3,389	34,449	6,271						
	150C1F3 / 15(	3400	5982	33671	0	0	0	3,4	5,982	33,671	808,104	162,268	3,4	33,671	5,982						
1b	Comp. gl	3826	5129	38027	1568	4819	-37538	5,394	9,948	0,489	8,0685	175,1997	5,394	0,489	9,948	1b	3778,101	4639,305	80,449	116,089	142,516
Wind, -20 dgr	GW / opgw	1840	2705	18928	962	2440	-18464	2,802	5,145	0,464	22,93552	256,4469	2,802	0,464	5,145	Wind angle: -45 dgr					
Permanentloa	380C1F1 / 38(	14179	19705	145779	5771	18294	-143546	19,95	37,999	2,233	91,553	1557,959	19,95	2,233	37,999						
Wind angle: -	380C1F2 / 38(	14188	19462	145445	6348	18172	-143417	20,536	37,634	2,028	65,91	1223,105	20,536	2,028	37,634						
	380C1F3 / 38(	14198	19174	145074	6927	18030	-143274	21,125	37,204	1,8	43,2	892,896	21,125	1,8	37,204						
	150C1F1 / 15(	3545	4926	36445	0	0	0	3,545	4,926	36,445	1494,245	221,4635	3,545	36,445	4,926						
	150C1F2 / 15(	3547	4866	36361	0	0	0	3,547	4,866	36,361	1181,733	177,6535	3,547	36,361	4,866						
	150C1F3 / 15(	3550	4794	36269	0	0	0	3,55	4,794	36,269	870,456	134,581	3,55	36,269	4,794						
3	Comp. gl	6991	11147	62044	3864	9513	-59184	10,855	20,66	2,86	47,19	363,1428	10,855	2,86	20,66	3	4819,492	6463,802	106,023	147,247	199,213
Wind+ice, -5 c	GW / opgw	3387	6609	33320	2221	5167	-30212	5,608	11,776	3,108	153,6284	586,3498	5,608	3,108	11,776	Wind angle: -45 dgr					
Permanentloa	380C1F1 / 38(	16684	27186	162795	8429	23046	-154841	25,113	50,232	7,954	326,114	2059,512	25,113	7,954	50,232						
Wind angle: -	380C1F2 / 38(	16717	26409	161002	8953	22662	-154090	25,67	49,071	6,912	224,64	1594,808	25,67	6,912	49,071						
0	380C1F3 / 38(	16755	25490	158971	9483	22213	-153250	26,238	47,703	5,721	137,304	1144,872	26,238	5,721	47,703						
	150C1F1 / 15(	4171	6796	40699	0	0	0	4,171	6,796	40,699	1668,659	301,5765	4,171	40,699	6,796						
	150C1F2 / 15(	4179	6602	40250	0	0	0	4,179	6,602	40,25	1308,125	237,5495	4,179	40,25	6,602						
	150C1F3 / 15(	4189	6373	39743	0	0	0	4,189	6,373	39,743	953,832	175,9915	4,189	39,743	6,373						
4	Comp. gl	3766	4556	32994	2564	5327	-41996	6,33	9,883	-9,002	-148,533	176,046	6,33	-9,002	9,883	4	944,4288	4277,502	88,34	26,69	131,354
Construction/	GW / opgw	1810	2400	16251	1490	2677	-20541	3,3	5,077	-4,29	-212,055	253,4641	3,3	-4,29	5,077	Wind angle: -45 dgr					
Permanentloa	380C1F1 / 38(	13906	17092	122840	8273	17879	-139899	22,179	34,971	-17,059	-699,419	1433,811	22,179	-17,059	34,971						
Wind angle: -	380C1F2 / 38(	13913	16850	122514	8845	17761	-139803	22,758	34,611	-17,289	-561,893	1124,858	22,758	-17,289	34,611						
	380C1F3 / 38(	13921	16563	122152	9417	17623	-139698	23,338	34,186	-17,546	-421,104	820,464	23,338	-17,546	34,186						
	150C1F1 / 15(	3477	4273	30710	0	0	0	3,477	4,273	30,71	1259,11	194,3165	3,477	30,71	4,273						
	150C1F2 / 15(	3478	4212	30628	0	0	0	3,478	4,212	30,628	995,41	156,019	3,478	30,628	4,212						
	150C1F3 / 15(	3480	4141	30538	0	0	0	3,48	4,141	30,538	732,912	118,524	3,48	30,538	4,141						
1a	Comp. gl	4995	4572	39634	0	0	0	4,995	4,572	39,634	653,961	85,67775	4,995	39,634	4,572	1a	19368,35	2322,819	76,523	605,497	69,846
Wind, 10 dgr	GW / opgw	2408	2218	19129	0	0	0	2,408	2,218	19,129	945,5465	111,4658	2,408	19,129	2,218	Wind angle: 0 dgr					
Permanentloa	380C1F1 / 38(	18432	16830	145795	0	0	0	18,432	16,83	145,795	5977,595	690,03	18,432	145,795	16,83						
Wind angle: 0	380C1F2 / 38(	18432	16816	145796	0	0	0	18,432	16,816	145,796	4738,37	546,52	18,432	145,796	16,816						
	380C1F3 / 38(	18432	16799	145796	0	0	0	18,432	16,799	145,796	3499,104	403,176	18,432	145,796	16,799						
	150C1F1 / 15(	4608	4207	36449	0	0	0	4,608	4,207	36,449	1494,409	197,831	4,608	36,449	4,207						
	150C1F2 / 15(	4608	4204	36449	0	0	0	4,608	4,204	36,449	1184,593	161,974	4,608	36,449	4,204						
	150C1F3 / 15(	4608	4200	36449	0	0	0	4,608	4,2	36,449	874,776	126,144	4,608	36,449	4,2						
1b	Comp. gl	5072	5236	45788	0	0	0	5,072	5,236	45,788	755,502	96,7916	5,072	45,788	5,236	1b	22967,26	2716,02	77,931	717,566	82,049
Wind, -20 dgr	GW / opgw	2449	2563	22385	0	0	0	2,449	2,563	22,385	1106,491	128,5503	2,449	22,385	2,563	Wind angle: 0 dgr					
Permanentloa	380C1F1 / 38(	18776	19805	173171	0	0	0	18,776	19,805	173,171	7100,011	812,005	18,776	173,171	19,805						
Wind angle: 0	380C1F2 / 38(	18776	19800	173171	0	0	0	18,776	19,8	173,171	5628,058	643,5	18,776	173,171	19,8						
	380C1F3 / 38(	18776	19795	173172	0	0	0	18,776	19,795	173,172	4156,128	475,08	18,776	173,172	19,795						
	150C1F1 / 15(	4694	4951	43293	0	0	0	4,694	4,951	43,293	1775,013	228,808	4,694	43,293	4,951						
	150C1F2 / 15(	4694	4950	43293	0	0	0	4,694	4,95	43,293	1407,023	186,692	4,694	43,293	4,95						
	150C1F3 / 15(	4694	4949	43293	0	0	0	4,694	4,949	43,293	1039,032	144,593	4,694	43,293	4,949						
3	Comp. gl	8339	7174	62185	0	0	0	8,339	7,174	62,185	1026,053	135,466	8,339	62,185	7,174	3	24003,26	2870,096	93,047	753,262	86,639
Wind+ice, -5 c	GW / opgw	4080	3541	30550	0	0	0	4,08	3,541	30,55	1510,087	178,1324	4,08	30,55	3,541	Wind angle: 0 dgr					
Permanentloa	380C1F1 / 38(	21501	20259	176140	0	0	0	21,501	20,259	176,14	7221,74	830,619	21,501	176,14	20,259						
Wind angle: 0	380C1F2 / 38(	21501	20247	176141	0	0	0	21,501	20,247	176,141	5724,583	658,0275	21,501	176,141	20,247						
	380C1F3 / 38(	21501	20233	176141	0	0	0	21,501	20,233	176,141	4227,384	485,592	21,501	176,141	20,233						
	150C1F1 / 15(	5375	5065	44035	0	0	0	5,375	5,065	44,035	1805,435	237,2275	5,375	44,035	5,065						
	150C1F2 / 15(	5375	5062	44035	0	0	0	5,375	5,062	44,035	1431,138	194,0775	5,375	44,035	5,062						
	150C1F3 / 15(	5375	5058	44035	0	0	0	5,375	5,058	44,035	1056,84	150,9545	5,375	44,035	5,058						
4	Comp. gl	5006	4637	40530	0	0	0	5,006	4,637	40,53	668,745	86,7728	5,006	40,53	4,637	4	19881,68	2362,897	76,723	621,489	71,097
Construction/	GW / opgw	2414	2245	19597	0	0	0	2,414	2,245	19,597	968,6797	112,805	2,414	19,597	2,245	Wind angle: 0 dgr					
Permanentloa	380C1F1 / 38(	18481	17129	149696	0	0	0	18,481	17,129	149,696	6137,536	702,289	18,481	149,696	17,129						
Wind angle: 0	380C1F2 / 38(	18481	17124	149697	0	0	0	18,481	17,124	149,697	4865,153	556,53	18,481	149,697	17,124						
	380C1F3 / 38(	18481	17119	149697	0	0	0	18,481	17,119	149,697	3592,728	410,856	18,481	149,697	17,119						
	150C1F1 / 15(	4620	4282	37424	0	0	0	4,62	4,282	37,424	1534,384	200,972	4,62	37,424	4,282						
	150C1F2 / 15(	4620	4281	37424	0	0	0	4,62	4,281	37,424	1216,28	164,5425	4,62	37,424	4,281						
	150C1F3 / 15(	4620	4280	37424	0	0	0	4,62	4,28	37,424	898,176	128,13	4,62	37,424	4,28						
6	Comp. gl	5605	4953	43449	0	0	0	5,605	4,953	43,449	716,9085	93,21475	5,605	43,449	4,953	6	21191,31	2514,498	85,858	662,499	75,52
Permanent,+	GW / opgw	2703	2392	20985	0	0	0	2,703	2,392	20,985	1037,289	120,2908	2,703	20,985	2,392	0					
Permanentloa	380C1F1 / 38(	20680	18180	159484	0	0	0	20,68	18,18	159,484	6538,844	745,38	20,68	159,484	18,18						
	380C1F2 / 38(	20680	18180	159484	0	0	0	20,68	18,18	159,484	5183,23	590,85	20,68	159,484	18,18						
	380C1F3 / 38(	20680	18180	159484	0	0	0	20,68	18,18	159,484	3827,616	436,32	20,68	159,484	18,18						
	150C1F1 / 15(	5170	4545	39871	0	0	0	5,17	4,545	39,871	1634,711	214,78	5,17	39,871	4,545						
	150C1F2 / 15(	5170	4545	39871	0	0	0	5,17	4,545	39,871	1295,808	176,1475	5,17	39,871	4,545						
	150C1F3 / 15(	5170	4545	39871	0	0	0	5,17	4,545	39,871	956,904	137,515	5,17	39,871	4,545						
1a	Comp. gl	4958	6356	41414	0	0	0	4,958	6,356	41,414	683,331	115,0379	4,958	41,414	6,356	1a	20249,99	3207,796	75,952	631,96	96,939
Wind, 10 dgr	GW / opgw	2375	3505	20875	0	0	0	2,375	3,505	20,875	1031,851	175,0572	2,375	20,875	3,505	Wind angle: 45 dgr					
Permanentloa	380C1F1 / 38(	18280	23778	152859	0	0	0	18,28	23,778	152,859	6267,219	974,898	18,28	152,859	23,778						
Wind angle: 4	380C1F2 / 38(	18298	23253	151948	0	0	0	18,298	23,253	151,948	4938,31	755,7225	18,298	151,948	23,253						
	380C1F3 / 38(	18318	22631	150930	0	0	0	18,318	22,631	150,93	3622,32	543,144	18,318	150,93	22,631						
	150C1F1 / 15(	4570	5945	38215	0	0	0	4,57	5,945	38,215	1566,815	268,88	4,57	38,215	5,945						
	150C1F2 / 15(	4574	5813	37987	0	0	0	4,574	5,813	37,987	1234,578	214,0795	4,574	37,987	5,813						
	150C1F3 / 15(	4579	5658	37732	0	0	0	4,579	5,658	37,732	905,568	160,9765	4,579	37,732	5,658						
1b	Comp. gl	5067	5739	45932	0	0	0	5,067	5,739	45,932	757,878	105,0809	5,067	45,932	5,739	1b	23038,13	2965,474	77,854	719,676	89,694
Wind, -20 dgr	GW / opgw	2445	2916	22544	0	0	0	2,445	2,916	22,544	1114,35	145,9961	2,445	22,544	2,916	Wind angle: 45 dgr					
Permanentloa	380C1F1 / 38(	18755	21759	173742	0	0	0	18,755	21,759	173,742	7123,422	892,119	18,755	173,742	21,759						
Wind angle: 4	380C1F2 / 38(	18758	21619	173656	0	0	0	18,758	21,619	173,656	5643,82	702,6175	18,758	173,656	21,619						
	380C1F3 / 38(	18761	21453	173562	0	0	0	18,761	21,453	173,562	4165,488	514,872	18,761	173,562	21,453						
	150C1F1 / 15(	4689	5440	43435	0	0	0	4,689	5,44	43,435	1780,835	248,8295	4,689	43,435	5,44						
	150C1F2 / 15(	4689	5405	43414	0	0	0	4,689	5,405	43,414	1410,955	201,452	4,689	43,414	5,405						
	150C1F3 / 15(	4690	5363	43391	0	0	0	4,69	5,363	43,391	1041,384	154,507	4,69	43,391	5,363						
3	Comp. gl	8285	9921	64417	0	0	0	8,285	9,921	64,417	1062,881	180,6808	8,285	64,417	9,921	3	24610,46	3670,81	92,586	771,509	111,323
Wind+ice, -5 c	GW / opgw	4031	5510	32739	0	0	0	4,031	5,51	32,739	1618,289	275,4229	4,031	32,739	5,51	Wind angle: 45 dgr					
Permanentloa	380C1F1 / 38(	21391	26025	180420	0	0	0	21,391	26,025	180,42	7397,22	1067,025	21,391	180,42	26,025						
Wind angle: 4	380C1F2 / 38(	21405	25598	179849	0	0	0	21,405	25,598	179,849	5845,093	831,935	21,405	179,849	25,598						
	380C1F3 / 38(	21420	25091	179214	0	0	0	21,42	25,091	179,214	4301,136	602,184	21,42	179,214	25,091						
	150C1F1 / 15(	5348	6506	45105	0	0	0	5,348	6,506	45,105	1849,305	296,16	5,348	45,105	6,506						
	150C1F2 / 15(	5351	6399	44962	0	0	0	5,351	6,399	44,962	1461,265	237,398	5,351	44,962	6,399						
	150C1F3 / 15(	5355	6273	44803	0	0	0	5,355	6,273	44,803	1075,272	180,0045	5,355	44,803	6,273						
4	Comp. gl	5002	5139	40669	0	0	0	5,002	5,139	40,669	671,0385	95,0476	5,002	40,669	5,139	4	19950,8	2612,318	76,66	623,546	78,74
Construction/	GW / opgw	2410	2598	19751	0	0	0	2,41	2,598	19,751	976,2919	130,2507	2,41	19,751	2,598	Wind angle: 45 dgr					
Permanentloa	380C1F1 / 38(	18464	19082	150254	0	0	0	18,464	19,082	150,254	6160,414	782,362	18,464	150,254	19,082						
Wind angle: 4	380C1F2 / 38(	18466	18943	150170	0	0	0	18,466	18,943	150,17	4880,525	615,6475	18,466	150,17	18,943						
	380C1F3 / 38(	18468	18777	150078	0	0	0	18,468	18,777	150,078	3601,872	450,648	18,468	150,078	18,777						
	150C1F1 / 15(	4616	4771	37563	0	0	0	4,616	4,771	37,563	1540,083	220,999	4,616	37,563	4,771						
	150C1F2 / 15(	4617	4736	37542	0	0	0	4,617	4,736	37,542	1220,115	179,3135	4,617	37,542	4,736						
	150C1F3 / 15(	4617	4694	37519	0	0	0	4,617	4,694	37,519	900,456	138,0495	4,617	37,519	4,694						
1a	Comp. gl	4834	9851	49867	0	0	0	4,834	9,851	49,867	822,8055	172,4512	4,834	49,867	9,851	1a	24379,51	4933,762	74,066	757,063	149,757
Wind, 10 dgr	GW / opgw	2295	6054	27943	0	0	0	2,295	6,054	27,943	1381,222	300,9934	2,295	27,943	6,054	Wind angle: 90 dgr					
Permanentloa	380C1F1 / 38(	17795	37362	185712	0	0	0	17,795	37,362	185,712	7614,192	1531,842	17,795	185,712	37,362						
Wind angle: 9	380C1F2 / 38(	17846	35792	181367	0	0	0	17,846	35,792	181,367	5894,428	1163,24	17,846	181,367	35,792						
	380C1F3 / 38(	17909	33927	176323	0	0	0	17,909	33,927	176,323	4231,752	814,248	17,909	176,323	33,927						
	150C1F1 / 15(	4449	9341	46428	0	0	0	4,449	9,341	46,428	1903,548	407,4505	4,449	46,428	9,341						
	150C1F2 / 15(	4461	8948	45342	0	0	0	4,461	8,948	45,342	1473,615	315,3455	4,461	45,342	8,948						
	150C1F3 / 15(	4477	8482	44081	0	0	0	4,477	8,482	44,081	1057,944	228,1915	4,477	44,081	8,482						
1b	Comp. gl	5043	6628	46909	0	0	0	5,043	6,628	46,909	773,9985	119,7002	5,043	46,909	6,628	1b	23518,74	3406,236	77,465	734,095	103,187
Wind, -20 dgr	GW / opgw	2422	3562	23513	0	0	0	2,422	3,562	23,513	1162,248	177,9104	2,422	23,513	3,562	Wind angle: 90 dgr					
Permanentloa	380C1F1 / 38(	18651	25221	177586	0	0	0	18,651	25,221	177,586	7281,026	1034,061	18,651	177,586	25,221						
Wind angle: 9	380C1F2 / 38(	18666	24824	177001	0	0	0	18,666	24,824	177,001	5752,533	806,78	18,666	177,001	24,824						
	380C1F3 / 38(	18683	24353	176351	0	0	0	18,683	24,353	176,351	4232,424	584,472	18,683	176,351	24,353						
	150C1F1 / 15(	4663	6305	44397	0	0	0	4,663	6,305	44,397	1820,277	284,1515	4,663	44,397	6,305						
	150C1F2 / 15(	4666	6206	44250	0	0	0	4,666	6,206	44,25	1438,125	227,358	4,666	44,25	6,206						
	150C1F3 / 15(	4671	6088	44088	0	0	0	4,671	6,088	44,088	1058,112	171,8025	4,671	44,088	6,088						
3	Comp. gl	8099	15160	75361	0	0	0	8,099	15,16	75,361	1243,457	266,743	8,099	75,361	15,16	3	27695,69	5192,767	90,827	865,251	158,207
Wind+ice, -5 c	GW / opgw	3906	9314	41944	0	0	0	3,906	9,314	41,944	2073,292	463,3596	3,906	41,944	9,314	Wind angle: 90 dgr					
Permanentloa	380C1F1 / 38(	20965	37018	202705	0	0	0	20,965	37,018	202,705	8310,905	1517,738	20,965	202,705	37,018						
Wind angle: 9	380C1F2 / 38(	21016	35741	199601	0	0	0	21,016	35,741	199,601	6487,033	1161,583	21,016	199,601	35,741						
	380C1F3	21077	34228	196051	0	0	0	21,077	34,228	196,051	4705,224	821,472	21,077	196,051	34,228						
	150C1F1	5241	9254	50676	0	0	0	5,241	9,254	50,676	2077,716	408,2395	5,241	50,676	9,254						
	150C1F2	5254	8935	49900	0	0	0	5,254	8,935	49,9	1621,75	319,2845	5,254	49,9	8,935						
	150C1F3	5269	8557	49013	0	0	0	5,269	8,557	49,013	1176,312	234,3475	5,269	49,013	8,557						
4	Comp. gl	4982	6026	41619	0	0	0	4,982	6,026	41,619	686,7135	109,6421	4,982	41,619	6,026	4	20421,99	3052,301	76,344	637,683	92,208
Constructi	GW / opgv	2392	3241	20691	0	0	0	2,392	3,241	20,691	1022,756	162,0206	2,392	20,691	3,241	Wind angle: 90 dgr					

Permaner	380C1F1	18379	22538	154029	0	0	0	18,379	22,538	154,029	6315,189	924,058	18,379	154,029	22,538						
Wind angl	380C1F2	18392	22142	153454	0	0	0	18,392	22,142	153,454	4987,255	719,615	18,392	153,454	22,142						
	380C1F3	18405	21673	152815	0	0	0	18,405	21,673	152,815	3667,56	520,152	18,405	152,815	21,673						
	150C1F1	4595	5634	38507	0	0	0	4,595	5,634	38,507	1578,787	256,2665	4,595	38,507	5,634						
	150C1F2	4598	5536	38364	0	0	0	4,598	5,536	38,364	1246,83	205,209	4,598	38,364	5,536						
	150C1F3	4601	5418	38204	0	0	0	4,601	5,418	38,204	916,896	155,3375	4,601	38,204	5,418						
1a	Comp. gl	4913	7599	43986	0	0	0	4,913	7,599	43,986	725,769	135,4552	4,913	43,986	7,599	1a	21514,33	3822,862	75,273	670,113	115,753
Wind, 10 (	GW / opgv	2342	4421	23176	0	0	0	2,342	4,421	23,176	1145,59	220,31	2,342	23,176	4,421	Wind angle: -45 dgr					
Permaner	380C1F1	18102	28621	162955	0	0	0	18,102	28,621	162,955	6681,155	1173,461	18,102	162,955	28,621						
Wind angl	380C1F2	18136	27717	160880	0	0	0	18,136	27,717	160,88	5228,6	900,8025	18,136	160,88	27,717						
	380C1F3	18176	26649	158526	0	0	0	18,176	26,649	158,526	3804,624	639,576	18,176	158,526	26,649						
	150C1F1	4526	7155	40739	0	0	0	4,526	7,155	40,739	1670,299	318,248	4,526	40,739	7,155						
	150C1F2	4534	6929	40220	0	0	0	4,534	6,929	40,22	1307,15	250,1295	4,534	40,22	6,929						
	150C1F3	4544	6662	39631	0	0	0	4,544	6,662	39,631	951,144	184,88	4,544	39,631	6,662						
1b	Comp. gl	5060	6061	46194	0	0	0	5,06	6,061	46,194	762,201	110,3795	5,06	46,194	6,061	1b	23167,43	3125,068	77,743	723,548	94,582
Wind, -20	GW / opgv	2438	3147	22812	0	0	0	2,438	3,147	22,812	1127,597	157,4091	2,438	22,812	3,147	Wind angle: -45 dgr					
Permaner	380C1F1	18725	23011	174777	0	0	0	18,725	23,011	174,777	7165,857	943,451	18,725	174,777	23,011						
Wind angl	380C1F2	18732	22781	174552	0	0	0	18,732	22,781	174,552	5672,94	740,3825	18,732	174,552	22,781						
	380C1F3	18739	22507	174305	0	0	0	18,739	22,507	174,305	4183,32	540,168	18,739	174,305	22,507						
	150C1F1	4681	5753	43694	0	0	0	4,681	5,753	43,694	1791,454	261,6185	4,681	43,694	5,753						
	150C1F2	4683	5695	43638	0	0	0	4,683	5,695	43,638	1418,235	210,844	4,683	43,638	5,695						
	150C1F3	4685	5627	43576	0	0	0	4,685	5,627	43,576	1045,824	160,8155	4,685	43,576	5,627						
3	Comp. gl	8219	11794	67714	0	0	0	8,219	11,794	67,714	1117,281	211,45	8,219	67,714	11,794	3	25523,42	4214,069	91,998	799,127	128,053
Wind+ice,	GW / opgv	3981	6881	35697	0	0	0	3,981	6,881	35,697	1764,503	343,1534	3,981	35,697	6,881	Wind angle: -45 dgr					
Permaner	380C1F1	21250	29941	186949	0	0	0	21,25	29,941	186,949	7664,909	1227,581	21,25	186,949	29,941						
Wind angl	380C1F2	21278	29212	185580	0	0	0	21,278	29,212	185,58	6031,35	949,39	21,278	185,58	29,212						
0	380C1F3	21311	28350	184044	0	0	0	21,311	28,35	184,044	4417,056	680,4	21,311	184,044	28,35						
	150C1F1	5312	7485	46737	0	0	0	5,312	7,485	46,737	1916,217	336,101	5,312	46,737	7,485						
	150C1F2	5319	7303	46395	0	0	0	5,319	7,303	46,395	1507,838	266,602	5,319	46,395	7,303						
	150C1F3	5328	7087	46011	0	0	0	5,328	7,087	46,011	1104,264	199,392	5,328	46,011	7,087						
4	Comp. gl	4996	5460	40924	0	0	0	4,996	5,46	40,924	675,246	100,3318	4,996	40,924	5,46	4	20077,39	2771,647	76,571	627,338	83,619
Constructi	GW / opgv	2405	2828	20010	0	0	0	2,405	2,828	20,01	989,0943	141,6158	2,405	20,01	2,828	Wind angle: -45 dgr					
Permaner	380C1F1	18440	20333	151269	0	0	0	18,44	20,333	151,269	6202,029	833,653	18,44	151,269	20,333						
Wind angl	380C1F2	18445	20103	151049	0	0	0	18,445	20,103	151,049	4909,093	653,3475	18,445	151,049	20,103						
	380C1F3	18451	19829	150806	0	0	0	18,451	19,829	150,806	3619,344	475,896	18,451	150,806	19,829						
	150C1F1	4610	5083	37817	0	0	0	4,61	5,083	37,817	1550,497	233,758	4,61	37,817	5,083						
	150C1F2	4611	5026	37762	0	0	0	4,611	5,026	37,762	1227,265	188,7055	4,611	37,762	5,026						
	150C1F3	4613	4957	37701	0	0	0	4,613	4,957	37,701	904,824	144,3395	4,613	37,701	4,957						
1a	Comp. gl	3769	3652	31563	0	0	0	3,769	3,652	31,563	520,7895	67,98445	3,769	31,563	3,652	1a	15502,69	1860,538	57,771	484,623	56,066
Wind, 10 (	GW / opgv	1817	1771	15207	0	0	0	1,817	1,771	15,207	751,682	88,92145	1,817	15,207	1,771	Wind angle: 0 dgr					
Permaner	380C1F1	13916	13520	116761	0	0	0	13,916	13,52	116,761	4787,201	554,32	13,916	116,761	13,52						
Wind angl	380C1F2	13916	13506	116761	0	0	0	13,916	13,506	116,761	3794,733	438,945	13,916	116,761	13,506						
	380C1F3	13916	13489	116761	0	0	0	13,916	13,489	116,761	2802,264	323,736	13,916	116,761	13,489						
	150C1F1	3479	3380	29190	0	0	0	3,479	3,38	29,19	1196,79	157,7145	3,479	29,19	3,38						
	150C1F2	3479	3376	29190	0	0	0	3,479	3,376	29,19	948,675	128,8545	3,479	29,19	3,376						
	150C1F3	3479	3372	29190	0	0	0	3,479	3,372	29,19	700,56	100,0625	3,479	29,19	3,372						
1b	Comp. gl	3843	4279	37396	0	0	0	3,843	4,279	37,396	617,034	78,48165	3,843	37,396	4,279	1b	18984,19	2240,359	59,144	593,014	67,851
Wind, -20	GW / opgv	1856	2096	18286	0	0	0	1,856	2,096	18,286	903,877	105,0158	1,856	18,286	2,096	Wind angle: 0 dgr					
Permaner	380C1F1	14252	16398	143288	0	0	0	14,252	16,398	143,288	5874,808	672,318	14,252	143,288	16,398						
Wind angl	380C1F2	14252	16394	143289	0	0	0	14,252	16,394	143,289	4656,893	532,805	14,252	143,289	16,394						
	380C1F3	14252	16389	143289	0	0	0	14,252	16,389	143,289	3438,936	393,336	14,252	143,289	16,389						
	150C1F1	3563	4100	35822	0	0	0	3,563	4,1	35,822	1468,702	187,6965	3,563	35,822	4,1						
	150C1F2	3563	4098	35822	0	0	0	3,563	4,098	35,822	1164,215	152,7815	3,563	35,822	4,098						
	150C1F3	3563	4097	35822	0	0	0	3,563	4,097	35,822	859,728	117,9245	3,563	35,822	4,097						
3	Comp. gl	7128	6390	55305	0	0	0	7,128	6,39	55,305	912,5325	120,0474	7,128	55,305	6,39	3	20304,46	2426,969	74,365	637,806	73,478
Wind+ice,	GW / opgv	3496	3161	27210	0	0	0	3,496	3,161	27,21	1344,99	158,9052	3,496	27,21	3,161	Wind angle: 0 dgr					
Permaner	380C1F1	16998	17060	148077	0	0	0	16,998	17,06	148,077	6071,157	699,46	16,998	148,077	17,06						
Wind angl	380C1F2	16998	17048	148078	0	0	0	16,998	17,048	148,078	4812,535	554,06	16,998	148,078	17,048						
	380C1F3	16998	17034	148078	0	0	0	16,998	17,034	148,078	3553,872	408,816	16,998	148,078	17,034						
	150C1F1	4249	4265	37019	0	0	0	4,249	4,265	37,019	1517,779	198,2345	4,249	37,019	4,265						
	150C1F2	4249	4262	37019	0	0	0	4,249	4,262	37,019	1203,118	161,8845	4,249	37,019	4,262						
	150C1F3	4249	4258	37020	0	0	0	4,249	4,258	37,02	888,48	125,5615	4,249	37,02	4,258						
4	Comp. gl	3779	3709	32388	0	0	0	3,779	3,709	32,388	534,402	68,94545	3,779	32,388	3,709	4	15982,9	1896,961	57,96	499,582	57,203
Constructi	GW / opgv	1822	1794	15635	0	0	0	1,822	1,794	15,635	772,8381	90,06214	1,822	15,635	1,794	Wind angle: 0 dgr					
Permaner	380C1F1	13962	13791	120415	0	0	0	13,962	13,791	120,415	4937,015	565,431	13,962	120,415	13,791						
Wind angl	380C1F2	13962	13787	120416	0	0	0	13,962	13,787	120,416	3913,52	448,0775	13,962	120,416	13,787						
	380C1F3	13962	13782	120416	0	0	0	13,962	13,782	120,416	2889,984	330,768	13,962	120,416	13,782						
	150C1F1	3491	3448	30104	0	0	0	3,491	3,448	30,104	1234,264	160,5685	3,491	30,104	3,448						
	150C1F2	3491	3447	30104	0	0	0	3,491	3,447	30,104	978,38	131,228	3,491	30,104	3,447						
	150C1F3	3491	3445	30104	0	0	0	3,491	3,445	30,104	722,496	101,8805	3,491	30,104	3,445						
6	Comp. gl	3769	3598	31565	0	0	0	3,769	3,598	31,565	520,8225	67,09345	3,769	31,565	3,598	6	15504,14	1833,892	57,774	484,668	55,249
Permaner	GW / opgv	1817	1734	15208	0	0	0	1,817	1,734	15,208	751,7314	87,09254	1,817	15,208	1,734	0					
Permaner	380C1F1	13917	13311	116772	0	0	0	13,917	13,311	116,772	4787,652	545,751	13,917	116,772	13,311						
	380C1F2	13917	13311	116772	0	0	0	13,917	13,311	116,772	3795,09	432,6075	13,917	116,772	13,311						
	380C1F3	13917	13311	116772	0	0	0	13,917	13,311	116,772	2802,528	319,464	13,917	116,772	13,311						
	150C1F1	3479	3328	29193	0	0	0	3,479	3,328	29,193	1196,913	155,5825	3,479	29,193	3,328						
	150C1F2	3479	3328	29193	0	0	0	3,479	3,328	29,193	948,7725	127,2945	3,479	29,193	3,328						
	150C1F3	3479	3328	29193	0	0	0	3,479	3,328	29,193	700,632	99,0065	3,479	29,193	3,328						
1a	Comp. gl	3721	5526	34140	0	0	0	3,721	5,526	34,14	563,31	98,80705	3,721	34,14	5,526	1a	16780,48	2790,281	57,026	523,053	84,517
Wind, 10 (	GW / opgv	1776	3137	17651	0	0	0	1,776	3,137	17,651	872,4889	156,4117	1,776	17,651	3,137	Wind angle: 45 dgr					
Permaner	380C1F1	13718	20828	126992	0	0	0	13,718	20,828	126,992	5206,672	853,948	13,718	126,992	20,828						
Wind angl	380C1F2	13740	20262	125724	0	0	0	13,74	20,262	125,724	4086,03	658,515	13,74	125,724	20,262						
	380C1F3	13765	19593	124294	0	0	0	13,765	19,593	124,294	2983,056	470,232	13,765	124,294	19,593						
	150C1F1	3430	5207	31748	0	0	0	3,43	5,207	31,748	1301,668	232,352	3,43	31,748	5,207						
	150C1F2	3435	5066	31431	0	0	0	3,435	5,066	31,431	1021,508	183,5375	3,435	31,431	5,066						
	150C1F3	3441	4898	31073	0	0	0	3,441	4,898	31,073	745,752	136,4775	3,441	31,073	4,898						
1b	Comp. gl	3836	4792	37632	0	0	0	3,836	4,792	37,632	620,928	86,9318	3,836	37,632	4,792	1b	19100,41	2494,795	59,031	596,486	75,647
Wind, -20	GW / opgv	1849	2459	18535	0	0	0	1,849	2,459	18,535	916,1851	122,9536	1,849	18,535	2,459	Wind angle: 45 dgr					
Permaner	380C1F1	14222	18393	144221	0	0	0	14,222	18,393	144,221	5913,061	754,113	14,222	144,221	18,393						
Wind angl	380C1F2	14226	18248	144090	0	0	0	14,226	18,248	144,09	4682,925	593,06	14,226	144,09	18,248						
	380C1F3	14230	18076	143945	0	0	0	14,23	18,076	143,945	3454,68	433,824	14,23	143,945	18,076						
	150C1F1	3555	4598	36055	0	0	0	3,555	4,598	36,055	1478,255	208,0705	3,555	36,055	4,598						
	150C1F2	3556	4562	36022	0	0	0	3,556	4,562	36,022	1170,715	167,823	3,556	36,022	4,562						
	150C1F3	3557	4519	35986	0	0	0	3,557	4,519	35,986	863,664	128,0195	3,557	35,986	4,519						
3	Comp. gl	7064	9199	58093	0	0	0	7,064	9,199	58,093	958,5345	166,2647	7,064	58,093	9,199	3	21135,85	3252,952	73,776	662,825	98,929
Wind+ice,	GW / opgv	3440	5185	29886	0	0	0	3,44	5,185	29,886	1477,265	258,909	3,44	29,886	5,185	Wind angle: 45 dgr					
Permaner	380C1F1	16855	23024	154103	0	0	0	16,855	23,024	154,103	6318,223	943,984	16,855	154,103	23,024						
Wind angl	380C1F2	16871	22573	153322	0	0	0	16,871	22,573	153,322	4982,965	733,6225	16,871	153,322	22,573						
	380C1F3	16891	22039	152451	0	0	0	16,891	22,039	152,451	3658,824	528,936	16,891	152,451	22,039						
	150C1F1	4214	5756	38526	0	0	0	4,214	5,756	38,526	1579,566	259,173	4,214	38,526	5,756						
	150C1F2	4218	5643	38331	0	0	0	4,218	5,643	38,331	1245,758	206,5965	4,218	38,331	5,643						
	150C1F3	4223	5510	38113	0	0	0	4,223	5,51	38,113	914,712	155,4665	4,223	38,113	5,51						
4	Comp. gl	3774	4221	32614	0	0	0	3,774	4,221	32,614	538,131	77,3832	3,774	32,614	4,221	4	16095,49	2151,161	57,874	502,945	64,991
Constructi	GW / opgv	1817	2156	15874	0	0	0	1,817	2,156	15,874	784,6518	107,952	1,817	15,874	2,156	Wind angle: 45 dgr					
Permaner	380C1F1	13939	15784	121321	0	0	0	13,939	15,784	121,321	4974,161	647,144	13,939	121,321	15,784						
Wind angl	380C1F2	13942	15639	121193	0	0	0	13,942	15,639	121,193	3938,773	508,2675	13,942	121,193	15,639						
	380C1F3	13945	15468	121052	0	0	0	13,945	15,468	121,052	2905,248	371,232	13,945	121,052	15,468						
	150C1F1	3485	3946	30330	0	0	0	3,485	3,946	30,33	1243,53	180,9535	3,485	30,33	3,946						
	150C1F2	3486	3910	30298	0	0	0	3,486	3,91	30,298	984,685	146,248	3,486	30,298	3,91						
	150C1F3	3486	3867	30263	0	0	0	3,486	3,867	30,263	726,312	111,981	3,486	30,263	3,867						
1a	Comp. gl	3594	9286	44917	0	0	0	3,594	9,286	44,917	741,1305	160,5867	3,594	44,917	9,286	1a	22033,34	4644,113	55,092	682,754	141,275
Wind, 10 (	GW / opgv	1704	5847	26130	0	0	0	1,704	5,847	26,13	1291,606	290,3123	1,704	26,13	5,847	Wind angle: 90 dgr					
Permaner	380C1F1	13230	35411	168621	0	0	0	13,23	35,411	168,621	6913,461	1451,851	13,23	168,621	35,411						
Wind angl	380C1F2	13274	33745	163430	0	0	0	13,274	33,745	163,43	5311,475	1096,713	13,274	163,43	33,745						
	380C1F3	13330	31758	157314	0	0	0	13,33	31,758	157,314	3775,536	762,192	13,33	157,314	31,758						
	150C1F1	3308	8853	42155	0	0	0	3,308	8,853	42,155	1728,355	381,167	3,308	42,155	8,853						
	150C1F2	3319	8436	40858	0	0	0	3,319	8,436	40,858	1327,885	292,4245	3,319	40,858	8,436						
	150C1F3	3333	7939	39329	0	0	0	3,333	7,939	39,329	943,896	208,8675	3,333	39,329	7,939						
1b	Comp. gl	3802	5734	39070	0	0	0	3,802	5,734	39,07	644,655	102,4051	3,802	39,07	5,734	1b	19807,49	2961,152	58,489	617,736	89,918
Wind, -20	GW / opgv	1820	3152	19921	0	0	0	1,82	3,152	19,921	984,695	157,1866	1,82	19,921	3,152	Wind angle: 90 dgr					
Permaner	380C1F1	14077	22060	149873	0	0	0	14,077	22,06	149,873	6144,793	904,46	14,077	149,873	22,06						
Wind angl	380C1F2	14097	21634	149032	0	0	0	14,097	21,634	149,032	4843,54	703,105	14,097	149,032	21,634						
	380C1F3	14120	21131	148091	0	0	0	14,12	21,131	148,091	3554,184	507,144	14,12	148,091	21,131						
	150C1F1	3519	5515	37468	0	0	0	3,519	5,515	37,468	1536,188	245,4695	3,519	37,468	5,515						
	150C1F2	3524	5409	37258	0	0	0	3,524	5,409	37,258	1210,885	195,1745	3,524	37,258	5,409						
	150C1F3	3530	5283	37023	0	0	0	3,53	5,283	37,023	888,552	146,207	3,53	37,023	5,283						
3	Comp. gl	6869	14643	70832	0	0	0	6,869	14,643	70,832	1168,728	255,691	6,869	70,832	14,643	3	25014,5	4864,937	71,814	780,903	148,582
Wind+ice,	GW / opgv	3318	9119	40232	0	0	0	3,318	9,119	40,232	1988,668	453,2739	3,318	40,232	9,119	Wind angle: 90 dgr					
Permaner	380C1F1	16379	34727	182634	0	0	0	16,379	34,727	182,634	7487,994	1423,807	16,379	182,634	34,727						
Wind angl	380C1F2	16430	33370	178824	0	0	0	16,43	33,37	178,824	5811,78	1084,525	16,43	178,824	33,37						
	380C1F3	16493	31759	174414	0	0	0	16,493	31,759	174,414	4185,936	762,216	16,493	174,414	31,759						
	150C1F1	4095	8682	45658	0	0	0	4,095	8,682	45,658	1871,978	378,4845	4,095	45,658	8,682						
	150C1F2	4107	8342	44706	0	0	0	4,107	8,342	44,706	1452,945	293,7035	4,107	44,706	8,342						
	150C1F3	4123	7940	43603	0	0	0	4,123	7,94	43,603	1046,472	213,2365	4,123	43,603	7,94						
4	Comp. gl	3747	5157	34001	0	0	0	3,747	5,157	34,001	561,0165	92,77185	3,747	34,001	5,157	4	16784,15	2615,662	57,451	523,642	79,202
Constructi	GW / opgv	1793	2843	17207	0	0	0	1,793	2,843	17,207	850,542	141,8922	1,793	17,207	2,843	Wind angle: 90 dgr					
Permaner	380C1F1	13826	19437	126836	0	0	0	13,826	19,437	126,836	5200,276	796,917	13,826	126,836	19,437						
Wind angl	380C1F2	13842	19013	126015	0	0	0	13,842	19,013	126,015	4095,488	617,9225	13,842	126,015	19,013						
	380C1F3	13860	18512	125096	0	0	0	13,86	18,512	125,096	3002,304	444,288	13,86	125,096	18,512						
	150C1F1	3457	4859	31709	0	0	0	3,457	4,859	31,709	1300,069	218,2325	3,457	31,709	4,859						
	150C1F2	3461	4753	31504	0	0	0	3,461	4,753	31,504	1023,88	173,508	3,461	31,504	4,753						
	150C1F3	3465	4628	31274	0	0	0	3,465	4,628	31,274	750,576	130,1295	3,465	31,274	4,628						
1a	Comp. gl	3670	6870	37598	0	0	0	3,67	6,87	37,598	620,367	120,8785	3,67	37,598	6,87	1a	18476,55	3454,442	56,254	574,401	104,835
Wind, 10 (	GW / opgv	1743	4124	20570	0	0	0	1,743	4,124	20,57	1016,775	205,174	1,743	20,57	4,124	Wind angle: -45 dgr					
Permaner	380C1F1	13519	26059	140505	0	0	0	13,519	26,059	140,505	5760,705	1068,419	13,519	140,505	26,059						
Wind angl	380C1F2	13555	25084	137797	0	0	0	13,555	25,084	137,797	4478,403	815,23	13,555	137,797	25,084						
	380C1F3	13598	23930	134685	0	0	0	13,598	23,93	134,685	3232,44	574,32	13,598	134,685	23,93						
	150C1F1	3380	6515	35126	0	0	0	3,38	6,515	35,126	1440,166	285,705	3,38	35,126	6,515						
	150C1F2	3389	6271	34449	0	0	0	3,389	6,271	34,449	1119,593	222,447	3,389	34,449	6,271						
	150C1F3	3400	5982	33671	0	0	0	3,4	5,982	33,671	808,104	162,268	3,4	33,671	5,982						
1b	Comp. gl	3826	5129	38027	0	0	0	3,826	5,129	38,027	627,4455	92,4718	3,826	38,027	5,129	1b	19295,17	2661,872	58,873	602,328	80,761
Wind, -20	GW / opgv	1840	2705	18928	0	0	0	1,84	2,705	18,928	935,611	135,1066	1,84	18,928	2,705	Wind angle: -45 dgr					
Permaner	380C1F1	14179	19705	145779	0	0	0	14,179	19,705	145,779	5976,939	807,905	14,179	145,779	19,705						
Wind angl	380C1F2	14188	19462	145445	0	0	0	14,188	19,462	145,445	4726,963	632,515	14,188	145,445	19,462						
	380C1F3	14198	19174	145074	0	0	0	14,198	19,174	145,074	3481,776	460,176	14,198	145,074	19,174						
	150C1F1	3545	4926	36445	0	0	0	3,545	4,926	36,445	1494,245	221,4635	3,545	36,445	4,926						

	150C1F2	3547	4866	36361	0	0	0	3,547	4,866	36,361	1181,733	177,6535	3,547	36,361	4,866										
	150C1F3	3550	4794	36269	0	0	0	3,55	4,794	36,269	870,456	134,581	3,55	36,269	4,794										
3	Comp. gl	6991	11147	62044	0	0	0	6,991	11,147	62,044	1023,726	198,2571	6,991	62,044	11,147		3	22323,81	3827,31	73,073	698,824	116,612			
Wind+ice,	GW / opg	3387	6609	33320	0	0	0	3,387	6,609	33,32	1647,008	329,257	3,387	33,32	6,609		Wind angle: -45 dgr								
Permaner	380C1F1	16684	27186	162795	0	0	0	16,684	27,186	162,795	6674,595	1114,626	16,684	162,795	27,186										
Wind angl	380C1F2	16717	26409	161002	0	0	0	16,717	26,409	161,002	5232,565	858,2925	16,717	161,002	26,409										
0	380C1F3	16755	25490	158971	0	0	0	16,755	25,49	158,971	3815,304	611,76	16,755	158,971	25,49										
	150C1F1	4171	6796	40699	0	0	0	4,171	6,796	40,699	1668,659	301,5765	4,171	40,699	6,796										
	150C1F2	4179	6602	40250	0	0	0	4,179	6,602	40,25	1308,125	237,5495	4,179	40,25	6,602										
	150C1F3	4189	6373	39743	0	0	0	4,189	6,373	39,743	953,832	175,9915	4,189	39,743	6,373										
4	Comp. gl	3766	4556	32994	0	0	0	3,766	4,556	32,994	544,401	82,8943	3,766	32,994	4,556		4	16284,91	2317,67	57,751	508,627	70,087			
Constructi	GW / opg	1810	2400	16251	0	0	0	1,81	2,4	16,251	803,2869	120,0076	1,81	16,251	2,4		Wind angle: -45 dgr								
Permaner	380C1F1	13906	17092	122840	0	0	0	13,906	17,092	122,84	5036,44	700,772	13,906	122,84	17,092										
Wind angl	380C1F2	13913	16850	122514	0	0	0	13,913	16,85	122,514	3981,705	547,625	13,913	122,514	16,85										
	380C1F3	13921	16563	122152	0	0	0	13,921	16,563	122,152	2931,648	397,512	13,921	122,152	16,563										
	150C1F1	3477	4273	30710	0	0	0	3,477	4,273	30,71	1259,11	194,3165	3,477	30,71	4,273										
	150C1F2	3478	4212	30628	0	0	0	3,478	4,212	30,628	995,41	156,019	3,478	30,628	4,212										
	150C1F3	3480	4141	30538	0	0	0	3,48	4,141	30,538	732,912	118,524	3,48	30,538	4,141										

W4H400Z 26-AL2

Hoogte mast	Ber & bijlage	63	m		
Hoogte onderste stroomdraad (F3)		37	m		
		Hoogte		Excentriciteit ophanging t.o.v. hart mast	
Bliksemdraad = GW / CH_{mast} -	0,57 m =	62,43	m	0,76	m
1e traverse - 380C1F1 F2 +	8,5 m =	54	m	0	m
1e traverse - 150C1F1		54		5,5	m
2e traverse - 380C1F2 F3 +	8,5 m =	45,5	m	0	m
2e traverse - 150C1F2 F3 +		45,5	m	5,5	m
3e traverse - 380C1F3		37	m	0	m
3e traverse - 150C1F3		37		5,5	m
Passieve lijn = Comp C. F3 -	7,5 m =	29,5	m	2,119	m

Uit mast ULS (incl bel factoren)				Uit lijnen SLS					
N	V	M		Nmin	Nmax	Vmax	Mlangs;ma	Mdwars;max	
[kN]	[kN]	[kNm]		[kN]	[kN]	[kN]	[kNm]	[kNm]	
967	131	3839							
967	131	3839		90	166	316	7601	14413	

			Belastingen uit lijnen					Belasting uit mast		
			M_{langs}	M_{dwars}	N	V_{langs}	V_{dwars}	N	V	M
SLS	0 deg	1a	4324	5070	92	95	111	806	87	2559
		1b	5353	6013	90	118	132	806	87	2559
		3	6518	8203	164	143	180	806	87	2559
		4	1904	5435	97	41	119	806	87	2559
	45 deg	1a	1408	9234	96	31	202	806	87	2559
		1b	5191	6703	90	114	147	806	87	2559
		3	5829	10379	165	128	228	806	87	2559
		4	1801	6118	97	38	134	806	87	2559
	90 deg	1a	5141	14413	97	111	316	806	87	2559
		1b	5360	7501	90	118	165	806	87	2559
		3	6574	12944	166	144	285	806	87	2559
		4	2046	6904	97	44	151	806	87	2559
	-45 deg	1a	7601	9405	92	166	206	806	87	2559
		1b	5510	6733	90	121	148	806	87	2559
		3	7209	10463	164	158	230	806	87	2559
		4	2079	6152	97	44	135	806	87	2559

regel		Loadcase	Totaal M_{langs}	M_{dwars}	N	V_{langs}	V_{dwars}	Totaal moment	M langs max	M dwars max	N max	V langs max	V dwars max	M tot max	N min
1 Perm load 1,2	0 deg	1a	6883	7629	897	182	198	10275,43	1						
2 Perm load 1,2	0 deg	1b	7912	8572	896	205	219	11665,41	2						x
3 Perm load 1,2	0 deg	3	9077	10762	969	231	268	14079,14	3						
4 Perm load 1,2	0 deg	4	4463	7995	903	128	207	9156,068	4						
5									5						
6 Perm load 1,2	45 deg	1a	3967	11793	902	118	290	12442,64	6						
7 Perm load 1,2	45 deg	1b	7751	9262	896	201	234	12077,4	7						
8 Perm load 1,2	45 deg	3	8388	12938	971	215	316	15419,38	8						
9 Perm load 1,2	45 deg	4	4360	8678	903	126	222	9711,551	9						
10									10						
11 Perm load 1,2	90 deg	1a	7700	16972	902	198	403	18637,5	11	x		x	x		
12 Perm load 1,2	90 deg	1b	7919	10060	896	205	252	12803,12	12						
13 Perm load 1,2	90 deg	3	9134	15504	972	231	372	17994,02	13		x				
14 Perm load 1,2	90 deg	4 Construct	4606	9464	903	131	239	10525,05	14						
15									15						
16 Perm load 1,2	-45 deg	1a	9410	11965	898	253	293	15221,85	16 x			x			
17 Perm load 1,2	-45 deg	1b	7320	9292	896	208	235	11829,16	17						
18 Perm load 1,2	-45 deg	3	9019	13023	970	245	318	15840,58	18						
19 Perm load 1,2	-45 deg	4	3889	8712	903	132	222	9540,256	19						
			9410	16972	972	253	403	18638							
					896										

samenvatting

Mast	Bijlage	Wind	Loadcase	M_{langs}	M_{dwars}	N	V_{langs}	V_{dwars}
2	W4H400ZA 26-AL2	Perm load :0 deg	1b	7912	8572	896	205	219
11	W4H400ZA 26-AL2	Perm load :90 deg	1a	7700	16972	902	198	403
13	W4H400ZA 26-AL2	Perm load :90 deg	3	9134	15504	972	231	372
16	W4H400ZA 26-AL2	Perm load :-45 deg	1a	9410	11965	898	253	293
	W4H400ZA 26-AL2	#N/B	#N/B	#N/B	#N/B	#N/B	#N/B	#N/B
	W4H400ZA 26-AL2	#N/B	#N/B	#N/B	#N/B	#N/B	#N/B	#N/B

W4H400Z+10 TOWE APPENDIX: AL2

Loadcases for tower strength (serviceability/limit state)

Loadcase according to 50341-3-15

		AHEAD			BACK		Totaal			Belastingen op mastvoet, per lijn					Belasting op mastvoet, belastinggeval					
	Attachmer	[N]	[N]	[N]	[N]	[N]	Vert	Dwars	Langs	M_{langs}	M_{dwars}	N	V_{langs}	V_{dwars}		M_{langs}	M_{dwars}	N	V_{langs}	V_{dwars}
							[kN]	[kN]	[kN]											
1a	Comp. gl 4178	3982	34328	2006	3988	-34329	6,184	7,97	-0,001	-0,0295	248,2189	6,184	-0,001	7,97	1a	4323,955	5069,879	91,546	95,032	111,035
Wind, 10 c	GW / opgv2014	1934	16551	1162	1933	-16552	3,176	3,867	-0,001	-0,06243	243,8306	3,176	-0,001	3,867	Wind angle: 0 dgr					
Permanen	380C1F1 / 15425	14715	126723	7582	14712	-126726	23,007	29,427	-0,003	-0,162	1589,058	23,007	-0,003	29,427						
Wind ang	380C1F2 / 15425	14697	126722	8114	14697	-126725	23,539	29,394	-0,003	-0,1365	1337,427	23,539	-0,003	29,394						
	380C1F3 / 15425	14675	126722	8647	14680	-126725	24,072	29,355	-0,003	-0,111	1086,135	24,072	-0,003	29,355						
	150C1F1 /3856	3679	31681	0	0	0	3,856	3,679	31,681	1710,774	219,874	3,856	31,681	3,679						
	150C1F2 /3856	3674	31681	0	0	0	3,856	3,674	31,681	1441,486	188,375	3,856	31,681	3,674						
	150C1F3 /3856	3669	31681	0	0	0	3,856	3,669	31,681	1172,197	156,961	3,856	31,681	3,669						
1b	Comp. gl 4254	4606	40283	1761	4588	-40116	6,015	9,194	0,167	-4,9265	283,9688	6,015	0,167	9,194	1b	5352,746	6012,761	89,727	117,668	131,943
Wind, -20	GW / opgv2054	2255	19696	1069	2244	-19606	3,123	4,499	0,09	5,6187	283,2461	3,123	0,09	4,499	Wind angle: 0 dgr					
Permanen	380C1F1 / 15764	17560	153674	6516	17475	-152831	22,28	35,035	0,743	40,122	1891,89	22,28	0,743	35,035						
Wind ang	380C1F2 / 15764	17556	153574	7158	17472	-152831	22,922	35,028	0,743	33,8065	1593,774	22,922	0,743	35,028						
	380C1F3 / 15764	17552	153575	7800	17468	-152832	23,564	35,02	0,743	27,491	1295,74	23,564	0,743	35,02						
	150C1F1 /3941	4390	38394	0	0	0	3,941	4,39	38,394	2073,276	258,7355	3,941	38,394	4,39						
	150C1F2 /3941	4389	38394	0	0	0	3,941	4,389	38,394	1746,927	221,375	3,941	38,394	4,389						
	150C1F3 /3941	4388	38394	0	0	0	3,941	4,388	38,394	1420,578	184,0315	3,941	38,394	4,388						
3	Comp. gl 14006	10444	91000	7996	10496	-91411	22,002	20,94	-0,411	-12,1245	664,3522	22,002	-0,411	20,94	3	6517,821	8202,978	163,589	143,18	180,357
Wind+ice,	GW / opgv6923	5189	45088	4481	5210	-45291	11,404	10,399	-0,203	-12,6733	657,8766	11,404	-0,203	10,399	Wind angle: 0 dgr					
Permanen	380C1F1 / 24251	22079	192372	12271	22096	-192534	36,522	44,175	-0,162	-8,748	2385,45	36,522	-0,162	44,175						
Wind ang	380C1F2 / 24251	22069	192373	13080	22088	-192535	37,331	44,157	-0,162	-7,371	2009,144	37,331	-0,162	44,157						
	380C1F3 / 24251	22057	192374	13890	22078	-192535	38,141	44,135	-0,161	-5,957	1632,995	38,141	-0,161	44,135						
	150C1F1 /6063	5520	48093	0	0	0	6,063	5,52	48,093	2597,022	331,4265	6,063	48,093	5,52						
	150C1F2 /6063	5517	48093	0	0	0	6,063	5,517	48,093	2188,232	284,37	6,063	48,093	5,517						
	150C1F3 /6063	5514	48093	0	0	0	6,063	5,514	48,093	1779,441	237,3645	6,063	48,093	5,514						
4	Comp. gl 4189	4024	35180	2647	4904	-42888	6,836	8,928	-7,708	-227,386	277,8615	6,836	-7,708	8,928	4	1903,697	5435,348	96,68	40,574	119,201
Constructi	GW / opgv2020	1947	16994	1531	2389	-20878	3,551	4,336	-3,884	-242,478	273,3952	3,551	-3,884	4,336	Wind angle: 0 dgr					
Permanen	380C1F1 / 15472	14926	130471	8812	16662	-145700	24,284	31,588	-15,229	-822,366	1705,752	24,284	-15,229	31,588						
Wind ang	380C1F2 / 15472	14923	130471	9424	16659	-145700	24,896	31,582	-15,229	-692,92	1436,981	24,896	-15,229	31,582						
	380C1F3 / 15472	14919	130471	10037	16655	-145701	25,509	31,574	-15,23	-563,51	1168,238	25,509	-15,23	31,574						
	150C1F1 /3868	3732	32618	0	0	0	3,868	3,732	32,618	1761,372	222,802	3,868	32,618	3,732						
	150C1F2 /3868	3731	32618	0	0	0	3,868	3,731	32,618	1484,119	191,0345	3,868	32,618	3,731						
	150C1F3 /3868	3730	32618	0	0	0	3,868	3,73	32,618	1206,866	159,284	3,868	32,618	3,73						
1a	Comp. gl 4111	6425	37975	2517	8703	-45139	6,628	15,128	-7,164	-211,338	460,3207	6,628	-7,164	15,128	1a	1408,166	9233,808	95,734	30,554	202,462
Wind, 10 c	GW / opgv1960	3717	19948	1392	4992	-24398	3,352	8,709	-4,45	-277,814	546,2504	3,352	-4,45	8,709	Wind angle: 45 dgr					
Permanen	380C1F1 / 15152	24234	141140	9362	31377	-163587	24,514	55,611	-22,447	-1212,14	3002,994	24,514	-22,447	55,611						
Wind ang	380C1F2 / 15181	23494	130391	9605	30293	-160256	24,786	53,787	-20,865	-949,358	2447,309	24,786	-20,865	53,787						
	380C1F3 / 15214	22619	137408	9853	29022	-156413	25,067	51,641	-19,005	-703,185	1910,717	25,067	-19,005	51,641						
	150C1F1 /3788	6058	35285	0	0	0	3,788	6,058	35,285	1905,39	347,966	3,788	35,285	6,058						
	150C1F2 /3795	5873	34848	0	0	0	3,795	5,873	34,848	1585,584	288,094	3,795	34,848	5,873						
	150C1F3 /3804	5655	34352	0	0	0	3,804	5,655	34,352	1271,024	230,157	3,804	34,352	5,655						
1b	Comp. gl 4249	5026	40414	1805	5342	-40629	6,054	10,368	-0,215	-6,3425	318,6844	6,054	-0,215	10,368	1b	5191,368	6702,967	90,11	114,132	147,113
Wind, -20	GW / opgv2050	2550	19839	1094	2725	-20033	3,144	5,275	-0,194	-12,1114	331,7077	3,144	-0,194	5,275	Wind angle: 45 dgr					
Permanen	380C1F1 / 15746	19193	154091	6674	20160	-154537	22,42	39,353	-0,446	-24,084	2125,062	22,42	-0,446	39,353						
Wind ang	380C1F2 / 15748	19076	154014	7285	19997	-154342	23,033	39,073	-0,328	-14,924	1777,822	23,033	-0,328	39,073						
	380C1F3 / 15750	18937	153930	7898	19806	-154125	23,648	38,743	-0,195	-7,215	1433,491	23,648	-0,195	38,743						
	150C1F1 /3936	4798	38523	0	0	0	3,936	4,798	38,523	2080,242	280,74	3,936	38,523	4,798						
	150C1F2 /3937	4769	38504	0	0	0	3,937	4,769	38,504	1751,932	238,643	3,937	38,504	4,769						
	150C1F3 /3938	4734	38483	0	0	0	3,938	4,734	38,483	1423,871	196,817	3,938	38,483	4,734						
3	Comp. gl 13986	12598	91653	8213	14359	-93964	22,199	26,957	-2,311	-68,1745	842,2712	22,199	-2,311	26,957	3	5828,672	10378,93	165,044	128,022	228,452
Wind+ice,	GW / opgv6904	6701	45777	4599	7667	-47331	11,503	14,368	-1,554	-97,0162	905,7365	11,503	-1,554	14,368	Wind angle: 45 dgr					
Permanen	380C1F1 / 24184	26753	194782	12837	29899	-199919	37,021	56,652	-5,137	-277,398	3059,208	37,021	-5,137	56,652						
Wind ang	380C1F2 / 24192	26413	194447	13538	29414	-199113	37,73	55,827	-4,666	-212,303	2540,129	37,73	-4,666	55,827						
	380C1F3 / 24202	26009	194078	14245	28846	-198215	38,447	54,855	-4,137	-153,069	2029,635	38,447	-4,137	54,855						
	150C1F1 /6046	6688	48696	0	0	0	6,046	6,688	48,696	2629,584	394,405	6,046	48,696	6,688						
	150C1F2 /6048	6603	48612	0	0	0	6,048	6,603	48,612	2211,846	333,7005	6,048	48,612	6,603						
	150C1F3 /6050	6502	48519	0	0	0	6,05	6,502	48,519	1795,203	273,849	6,05	48,519	6,502						
4	Comp. gl 4186	4444	35305	2674	5638	-43223	6,86	10,082	-7,918	-233,581	311,9553	6,86	-7,918	10,082	4	1800,696	6118,476	96,927	38,315	134,217
Constructi	GW / opgv2017	2241	17130	1547	2854	-21159	3,564	5,095	-4,029	-251,53	320,7895	3,564	-4,029	5,095	Wind angle: 45 dgr					
Permanen	380C1F1 / 15458	16558	130973	8918	19305	-147026	24,376	35,863	-16,053	-866,862	1936,602	24,376	-16,053	35,863						
Wind ang	380C1F2 / 15460	16442	130898	9509	19146	-146871	24,969	35,588	-15,973	-726,772	1619,254	24,969	-15,973	35,588						
	380C1F3 / 15462	16303	130816	10102	18960	-146699	25,564	35,263	-15,883	-587,671	1304,731	25,564	-15,883	35,263						
	150C1F1 /3864	4140	32743	0	0	0	3,864	4,14	32,743	1768,122	244,812	3,864	32,743	4,14						
	150C1F2 /3865	4110	32724	0	0	0	3,865	4,11	32,724	1488,942	208,2625	3,865	32,724	4,11						
	150C1F3 /3865	4076	32704	0	0	0	3,865	4,076	32,704	1210,048	172,0695	3,865	32,704	4,076						
1a	Comp. gl 3961	11289	52170	2806	12193	-56655	6,767	23,482	-4,485	-132,308	707,0583	6,767	-4,485	23,482	1a	5140,916	14413,08	96,596	110,862	316,149
Wind, 10 c	GW / opgv1880	7187	30780	1488	7192	-31820	3,368	14,379	-1,04	-64,9272	900,2407	3,368	-1,04	14,379	Wind angle: 90 dgr					
Permanen	380C1F1 / 14580	43060	195618	10399	43697	-203305	24,979	86,757	-7,687	-415,098	4684,878	24,979	-7,687	86,757						
Wind ang	380C1F2 / 14627	40932	189037	10531	41881	-197340	25,158	82,813	-8,303	-377,787	3767,992	25,158	-8,303	82,813						
	380C1F3 / 14689	38387	181226	10661	39736	-190319	25,35	78,123	-9,093	-336,441	2890,551	25,35	-9,093	78,123						
	150C1F1 /3645	10765	48905	0	0	0	3,645	10,765	48,905	2640,87	601,3575	3,645	48,905	10,765						
	150C1F2 /3657	10233	47259	0	0	0	3,657	10,233	47,259	2150,285	485,715	3,657	47,259	10,233						
	150C1F3 /3672	9597	45306	0	0	0	3,672	9,597	45,306	1676,322	375,285	3,672	45,306	9,597						
1b	Comp. gl 4228	5773	41283	1870	5876	-41494	6,098	11,649	-0,211	-6,2245	356,5672	6,098	-0,211	11,649	1b	5360,045	7500,648	90,433	117,68	164,608
Wind, -20	GW / opgv2030	3094	20700	1129	3074	-20723	3,159	6,168	-0,023	-1,43589	387,4691	3,159	-0,023	6,168	Wind angle: 90 dgr					
Permanen	380C1F1 / 15653	22102	157513	6907	22046	-157435	22,56	44,148	0,078	4,212	2383,992	22,56	0,078	44,148						
Wind ang	380C1F2 / 15666	21768	156993	7474	21762	-156931	23,14	43,53	0,062	2,821	1980,615	23,14	0,062	43,53						
	380C1F3 / 15681	21372	156415	8045	21430	-156371	23,726	42,802	0,044	1,628	1583,674	23,726	0,044	42,802						
	150C1F1 /3913	5526	39378	0	0	0	3,913	5,526	39,378	2126,412	319,9255	3,913	39,378	5,526						
	150C1F2 /3917	5442	39248	0	0	0	3,917	5,442	39,248	1785,784	269,1545	3,917	39,248	5,442						
	150C1F3 /3920	5343	39104	0	0	0	3,92	5,343	39,104	1446,848	219,251	3,92	39,104	5,343						
3	Comp. gl 13888	16409	95890	8503	17063	-98105	22,391	33,472	-2,215	-65,3425	1034,871	22,391	-2,215	33,472	3	6574,434	12944,18	166,09	143,742	284,979
Wind+ice,	GW / opgv6822	9449	49740	4743	9414	-50458	11,565	18,863	-0,718	-44,8247	1186,406	11,565	-0,718	18,863	Wind angle: 90 dgr					
Permanen	380C1F1 / 23885	35381	208677	13559	35549	-211327	37,444	70,93	-2,65	-143,1	3830,22	37,444	-2,65	70,93						
Wind ang	380C1F2 / 23924	34381	206660	14134	34696	-209407	38,058	69,077	-2,747	-124,989	3143,004	38,058	-2,747	69,077						
	380C1F3 / 23970	33198	204382	14718	33699	-207239	38,688	66,897	-2,857	-105,709	2475,189	38,688	-2,857	66,897						
	150C1F1 /5971	8845	52169	0	0	0	5,971	8,845	52,169	2817,126	510,4705	5,971	52,169	8,845						
	150C1F2 /5981	8595	51665	0	0	0	5,981	8,595	51,665	2350,758	423,968	5,981	51,665	8,595						
	150C1F3 /5992	8300	51095	0	0	0	5,992	8,3	51,095	1890,515	340,056	5,992	51,095	8,3						
4	Comp. gl 4168	5188	36145	2716	6142	-43822	6,884	11,33	-7,677	-226,472	348,8222	6,884	-7,677	11,33	4	2046,413	6904,481	97,108	43,555	151,456
Constructi	GW / opgv2001	2782	17960	1570	3179	-21638	3,571	5,961	-3,678	-229,618	374,8592	3,571	-3,678	5,961	Wind angle: 90 dgr					
Permanen	380C1F1 / 15385	19460	134318	9078	21128	-149358	24,463	40,588	-15,04	-812,16	2191,752	24,463	-15,04	40,588						
Wind ang	380C1F2 / 15395	19127	133810	9639	20854	-148950	25,034	39,981	-15,14	-688,87	1819,136	25,034	-15,14	39,981						
	380C1F3 / 15407	18732	133244	10202	20534	-148497	25,609	39,266	-15,253	-564,361	1452,842	25,609	-15,253	39,266						
	150C1F1 /3846	4865	33580	0	0	0	3,846	4,865	33,58	1813,32	283,863	3,846	33,58	4,865						
	150C1F2 /3849	4782	33452	0	0	0	3,849	4,782	33,452	1522,066	238,7505	3,849	33,452	4,782						
	150C1F3 /3852	4683	33311	0	0	0	3,852	4,683	33,311	1232,507	194,457	3,852	33,311	4,683						
1a	Comp. gl 4048	8177	42664	2282	6718	-39198	6,33	14,895	3,466	102,247	452,8158	6,33	3,466	14,895	1a	7600,663	9405,167	92,307	165,809	206,1
Wind, 10 c	GW / opgv1921	4993	23785	1299	3710	-20277	3,22	8,703	3,508	219,0044	545,7755	3,22	3,508	8,703	Wind angle: -45 dgr					
Permanen	380C1F1 / 14904	31043	159350	8534	24379	-143241	23,438	55,422	16,109	869,886	2992,788	23,438	16,109	55,422						
Wind ang	380C1F2 / 14947	29778	155755	8896	23745	-141586	23,843	53,523	14,169	644,6895	2435,297	23,843	14,169	53,523						
	380C1F3 / 15000	28278	151593	9263	23005	-139711	24,263	51,283	11,882	439,634	1897,471	24,263	11,882	51,283						
	150C1F1 /3726	7761	39838	0	0	0	3,726	7,761	39,838	2151,252	439,587	3,726	39,838	7,761						
	150C1F2 /3737	7444	38939	0	0	0	3,737	7,444	38,939	1771,725	359,2555	3,737	38,939	7,444						
	150C1F3 /3750	7069	37898	0	0	0	3,75	7,069	37,898	1402,226	282,178	3,75	37,898	7,069						
1b	Comp. gl 4243	5296	40648	1779	5044	-40305	6,022	10,34	0,343	10,1185	317,7906	6,022	0,343	10,34	1b	5510,257	6732,969	89,744	121,042	147,753
Wind, -20	GW / opgv2044	2744	20077	1079	2533	-19769	3,123	5,277	0,308	19,22844	331,8166	3,123	0,308	5,277	Wind angle: -45 dgr					

Permanen	380C1F1 / 15719	20243	155014	6580	19102	-153456	22,299	39,345	1,558	84,132	2124,63	22,299	1,558	39,345											
Wind angl	380C1F2 / 15725	20050	154814	7210	19004	-153381	22,935	39,054	1,433	65,2015	1776,957	22,935	1,433	39,054											
	380C1F3 / 15731	19820	154593	7840	18889	-153297	23,571	38,709	1,296	47,952	1432,233	23,571	1,296	38,709											
	150C1F1 / 3930	5061	38753	0	0	0	3,93	5,061	38,753	2092,662	294,909	3,93	38,753	5,061											
	150C1F2 / 3931	5012	38703	0	0	0	3,931	5,012	38,703	1760,987	249,6665	3,931	38,703	5,012											
	150C1F3 / 3933	4955	38648	0	0	0	3,933	4,955	38,648	1429,976	204,9665	3,933	38,648	4,955											
3	Comp. gl 13957	13979	92814	8087	12836	-92363	22,044	26,815	0,451	13,3045	837,7537	22,044	0,451	26,815		3	7208,936	10463,26	163,693	158,006	230,229				
Wind+ice,	GW / opgv6878	7691	46904	4531	6689	-46076	11,409	14,38	0,828	51,69204	906,4142	11,409	0,828	14,38		Wind angle: -45 dgr									
Permanen	380C1F1 / 24092	29843	198698	12510	26770	-195387	36,602	56,613	3,311	178,794	3057,102	36,602	3,311	56,613											
Wind angl	380C1F2 / 24111	29270	197864	13273	26484	-195060	37,384	55,754	2,804	127,582	2536,807	37,384	2,804	55,754											
0	380C1F3 / 24132	28592	196936	14038	26148	-194698	38,17	54,74	2,238	82,806	2025,38	38,17	2,238	54,74											
	150C1F1 / 6023	7461	49674	0	0	0	6,023	7,461	49,674	2682,396	436,0205	6,023	49,674	7,461											
	150C1F2 / 6028	7318	49466	0	0	0	6,028	7,318	49,466	2250,703	366,123	6,028	49,466	7,318											
	150C1F3 / 6033	7148	49234	0	0	0	6,033	7,148	49,234	1821,658	297,6575	6,033	49,234	7,148											
4	Comp. gl 4181	4713	35531	2658	5352	-43005	6,839	10,065	-7,474	-220,483	311,4093	6,839	-7,474	10,065		4	2079,276	6152,279	96,671	44,345	134,939				
Constructi	GW / opgv2012	2435	17359	1538	2671	-20981	3,55	5,106	-3,622	-226,121	321,4656	3,55	-3,622	5,106		Wind angle: -45 dgr									
Permanen	380C1F1 / 15437	17607	131874	8855	18272	-146171	24,292	35,879	-14,297	-772,038	1937,466	24,292	-14,297	35,879											
Wind angl	380C1F2 / 15441	17414	131679	9459	18176	-146112	24,9	35,59	-14,433	-656,702	1619,345	24,9	-14,433	35,59											
	380C1F3 / 15446	17184	131463	10063	18064	-146047	25,509	35,248	-14,584	-539,608	1304,176	25,509	-14,584	35,248											
	150C1F1 / 3859	4402	32969	0	0	0	3,859	4,402	32,969	1780,326	258,9325	3,859	32,969	4,402											
	150C1F2 / 3860	4353	32920	0	0	0	3,86	4,353	32,92	1497,86	219,2915	3,86	32,92	4,353											
	150C1F3 / 3862	4296	32866	0	0	0	3,862	4,296	32,866	1216,042	180,193	3,862	32,866	4,296											

W2S400A+ 27-AH

Hoogte mast		Ber & bijlage	62 m		
Hoogte onderste stroomdraad (F3)			36 m		
			Hoogte		Excentriciteit ophanging t.o.v. hart mast
Bliksemdraad = GW / OPGW	H_{mast} -	0,716 m =	61,284 m		1,459 m
1e traverse - 380C1F1	F2 +	10 m =	56 m		4,41 m
2e traverse - 380C1F2	F3 +	10 m =	46 m		4,41 m
3e traverse - 380C1F3			36 m		4,41 m
Passieve lijn = Comp C.	F3 -	4 m =	32 m		1,825 m

Uit mast (excl belastingsfactoren)			Uit lijnen (incl belastingsfactoren)				
N	V	M	Nmin	Nmax	Vmax	Mlangs;ma	Mdwars;max
[kN]	[kN]	[kNm]	[kN]	[kN]	[kN]	[kNm]	[kNm]
481	118,1270502	3523,319458	90	256	194	4195	9528

			Belastingen uit lijnen					Belasting uit mast			regel				Totaal							
			M_{langs}	M_{dwars}	N	V_{langs}	V_{dwars}	N	V	M				Loadcase	M_{langs}	M_{dwars}	N	V_{langs}	V_{dwars}	Totaal moment		
Perm load 1,2	0 deg	1a	1286	461	136	40	**0**	481	118	3523	1 Perm load 1,2	0 deg		1a	4809	461	617	158	0	4831,548	1	x
		1b	1444	473	139	45	**0**	481	22	661	2 Perm load 1,2	0 deg		1b	2104	473	620	67	0	2156,984	2	
		3	3924	862	**256**	123	**0**	481	33	991	3 Perm load 1,2	0 deg		3	4914	862	737	156	0	4989,56	3 x	x
		4	1643	546	161	51	**0**	481	22	661	4 Perm load 1,2	0 deg		4	2304	546	642	74	0	2367,899	4	
		6	1416	517	152	44	**0**				5 Perm load 1,2	0 deg		6							5	
											6										6	
	45 deg	1a	1628	4992	129	51	97	481	118	3523	7 Perm load 1,2	45 deg		1a	4119	7483	610	134	180	8541,952	7	
		1b	1461	1381	139	46	19	481	22	661	8 Perm load 1,2	45 deg		1b	1928	1849	620	61	35	2671,175	8	
		3	3995	3607	254	125	59	481	33	991	9 Perm load 1,2	45 deg		3	4695	4308	735	148	82	6372,115	9	
		4	1655	1456	161	52	19	481	22	661	10 Perm load 1,2	45 deg		4	2122	1923	642	67	35	2863,833	10	
											11										11	
	90 deg	1a	2270	**9528**	122	71	**194**	481	118	3523	12 Perm load 1,2	90 deg		1a	2270	13052	603	71	312	13247,63	12	x x x
		1b	1511	2287	137	47	39	481	22	661	13 Perm load 1,2	90 deg		1b	1511	2947	618	47	61	3311,891	13	
		3	**4195**	6344	249	**131**	117	481	33	991	14 Perm load 1,2	90 deg		3	4195	7335	730	131	150	8449,654	14	
		4	1689	2363	159	53	39	481	22	661	15 Perm load 1,2	90 deg		4 Construc	1689	3024	640	53	61	3463,644	15	
											16										16	
	-45 deg	1a	1628	4992	129	51	97	481	118	3523	17 Perm load 1,2	-45 deg		1a	4119	7483	610	134	180	8541,952	17	
		1b	1461	1381	139	46	19	481	22	661	18 Perm load 1,2	-45 deg		1b	1928	1849	620	61	35	2671,175	18	
		3	3995	3607	254	125	59	481	33	991	19 Perm load 1,2	-45 deg		3	4695	4308	735	148	82	6372,115	19	
		4	1655	1456	161	52	19	481	22	661	20 Perm load 1,2	-45 deg		4	2122	1923	642	67	35	2863,833	20	
											21										21	
Perm load 0,9	0 deg	1a	**1012**	**349**	103	**32**	**0**	361	118	3523	22 Perm load 0,9	0 deg		1a	4535	349	463	150	0	4548,892	22	
		1b	1155	360	106	36	**0**	361	22	661	23 Perm load 0,9	0 deg		1b	1816	360	467	58	0	1851,398	23	
		3	3745	753	223	117	**0**	361	33	991	24 Perm load 0,9	0 deg		3	4736	753	584	150	0	4795,4	24	
		4	1389	435	128	43	**0**	361	22	661	25 Perm load 0,9	0 deg		4	2050	435	489	66	0	2095,706	25	
		6	**1012**	**349**	103	**32**	**0**				26 Perm load 0,9	0 deg		6							26	
											27										27	
	45 deg	1a	1453	4877	95	45	97	361	118	3523	28 Perm load 0,9	45 deg		1a	3944	7368	456	129	180	8357,756	28	
		1b	1180	1268	105	37	19	361	22	661	29 Perm load 0,9	45 deg		1b	1647	1735	466	53	35	2392,272	29	
		3	3822	3496	221	119	59	361	33	991	30 Perm load 0,9	45 deg		3	4523	4197	582	143	82	6170,133	30	
		4	1405	1344	128	44	19	361	22	661	31 Perm load 0,9	45 deg		4 Construc	1872	1811	488	60	35	2604,576	31	
											32										32	
	90 deg	1a	2173	9419	**90**	68	194	361	118	3523	33 Perm load 0,9	90 deg		1a	2173	12942	451	68	312	13123,65	33	
		1b	1250	2171	103	39	39	361	22	661	34 Perm load 0,9	90 deg		1b	1250	2832	464	39	61	3095,327	34	
		3	4038	6231	216	126	117	361	33	991	35 Perm load 0,9	90 deg		3	4038	7222	577	126	150	8274,059	35	
		4	1449	2250	126	45	39	361	22	661	36 Perm load 0,9	90 deg		4	1449	2911	487	45	61	3251,236	36	
											37										37	
	-45 deg	1a	1453	4877	95	45	97	361	118	3523	38 Perm load 0,9	-45 deg		1a	3944	7368	456	129	180	8357,756	38	
		1b	1180	1268	105	37	19	361	22	661	39 Perm load 0,9	-45 deg		1b	1647	1735	466	53	35	2392,272	39	
		3	3822	3496	221	119	59	361	33	991	40 Perm load 0,9	-45 deg		3	4523	4197	582	143	82	6170,133	40	
		4	1405	1344	128	44	19	361	22	661	41 Perm load 0,9	-45 deg		4	1872	1811	488	60	35	2604,576	41	
														Max	4914	13052	737	158	312	13248		

samenvatting

	Mast	Bijlage		Wind	Loadcase	M_{langs}	M_{dwars}	N	V_{langs}	V_{dwars}
1	W2S400A+	27-AH	Perm load	0 deg	1a	4809	461	617	158	0
3	W2S400A+	27-AH	Perm load	0 deg	3	4914	862	737	156	0
12	W2S400A+	27-AH	Perm load	90 deg	1a	2270	13052	603	71	312

W2S400A+10 (Afs.com p.gl) TOWER (rev 8.0, date: 23-11-2012)Appendix AH
Loadcases for tower strength (ultimate limit state)
- \`

Loadcase according to 50341-3-15

			AHEAD			BACK		Totaal			Belastingen op mastvoet, per lijn					Belasting op mastvoet, belastinggeval					
		[N]	[N]	[N]	[N]	[N]	[N]	Vert [kN]	Dwars [kN]	Langs [kN]	M_{langs}	M_{dwars}	N	V_{langs}	V_{dwars}		M_{langs}	M_{dwars}	N	V_{langs}	V_{dwars}
	Attachment point																				
1a	GW / opgw	2714	0	19396	2714	0	-19396	5,428	0	0	0	23,93748	5,428	0	0	1a	1286,176	461,0955	135,646	40,193	0
Wind, 10	380C1F1 / 380C	20765	0	147925	20765	0	-147925	41,53	0	0	0	183,1473	41,53	0	0	Wind angle: 0 dgr					
Permane	380C1F2 / 380C	20765	0	147925	20765	0	-147925	41,53	0	0	0	183,1473	41,53	0	0						
Wind an(	380C1F3 / 380C	20765	0	147925	20765	0	-147925	41,53	0	0	0	60,59227	41,53	0	0						
	Comp.conducto	5628	0	40193				5,628	0	40,193	1286,176	10,2711	5,628	40,193	0						
1b	GW / opgw	2777	0	21991	2777	0	-21991	5,554	0	0	0	24,49314	5,554	0	0	1b	1443,872	472,9527	139,127	45,121	0
Wind, -2(	380C1F1 / 380C	21304	0	169936	21304	0	-169936	42,608	0	0	0	187,9013	42,608	0	0	Wind angle: 0 dgr					
Permane	380C1F2 / 380C	21304	0	169936	21304	0	-169936	42,608	0	0	0	187,9013	42,608	0	0						
Wind an(	380C1F3 / 380C	21304	0	169936	21304	0	-169936	42,608	0	0	0	62,16507	42,608	0	0						
	Comp.conducto	5749	0	45121				5,749	0	45,121	1443,872	10,49193	5,749	45,121	0						
3	GW / opgw	10779	0	60831	10779	0	-60831	21,558	0	0	0	95,07078	21,558	0	0	3	3923,552	862,2888	255,651	122,611	0
Wind+ice	380C1F1 / 380C	35387	0	238903	35387	0	-238903	70,774	0	0	0	312,1133	70,774	0	0	Wind angle: 0 dgr					
Permane	380C1F2 / 380C	35387	0	238903	35387	0	-238903	70,774	0	0	0	312,1133	70,774	0	0						
Wind an(	380C1F3 / 380C	35387	0	238903	35387	0	-238903	70,774	0	0	0	103,2593	70,774	0	0						
	Comp.conducto	21771	0	122611				21,771	0	122,611	3923,552	39,73208	21,771	122,611	0						
4	GW / opgw	3608	0	25032	3608	0	-25032	7,216	0	0	0	31,82256	7,216	0	0	4	1643,36	546,4525	160,879	51,355	0
Construc	380C1F1 / 380C	24375	0	171856	24375	0	-171856	48,75	0	0	0	214,9875	48,75	0	0	Wind angle: 0 dgr					
Permane	380C1F2 / 380C	24375	0	171856	24375	0	-171856	48,75	0	0	0	214,9875	48,75	0	0						
Wind an(	380C1F3 / 380C	24375	0	171856	24375	0	-171856	48,75	0	0	0	71,12625	48,75	0	0						
	Comp.conducto	7413	0	51355				7,413	0	51,355	1643,36	13,52873	7,413	51,355	0						
6	GW / opgw	3042	0	21373	3042	0	-21373	6,084	0	0	0	26,83044	6,084	0	0	6	1416,416	516,6655	151,994	44,263	0
Permane	380C1F1 / 380C	23267	0	162594	23267	0	-162594	46,534	0	0	0	205,2149	46,534	0	0	0					
Permane	380C1F2 / 380C	23267	0	162594	23267	0	-162594	46,534	0	0	0	205,2149	46,534	0	0						
	380C1F3 / 380C	23267	0	162594	23267	0	-162594	46,534	0	0	0	67,89311	46,534	0	0						
	Comp.conducto	6308	0	44263				6,308	0	44,263	1416,416	11,5121	6,308	44,263	0						
1a	GW / opgw	2507	2777	28392	2507	2777	-28392	5,014	5,554	0	0	333,1357	5,014	0	5,554	1a	1627,84	4991,759	128,746	50,87	96,796
Wind, 10	380C1F1 / 380C	19603	15922	189892	19603	15922	-189892	39,206	31,844	0	0	1637,722	39,206	0	31,844	Wind angle: 45 dgr					
Permane	380C1F2 / 380C	19719	14655	184448	19719	14655	-184448	39,438	29,31	0	0	1229,082	39,438	0	29,31						
Wind an(	380C1F3 / 380C	19876	12998	177650	19876	12998	-177650	39,752	25,996	0	0	1651,137	39,752	0	25,996						
	Comp.conducto	5336	4092	50870				5,336	4,092	50,87	1627,84	140,6822	5,336	50,87	4,092						
1b	GW / opgw	2757	555	22506	2757	555	-22506	5,514	1,11	0	0	86,47674	5,514	0	1,11	1b	1461,056	1381,455	138,601	45,658	19,346
Wind, -2(	380C1F1 / 380C	21212	3182	172085	21212	3182	-172085	42,424	6,364	0	0	479,8338	42,424	0	6,364	Wind angle: 45 dgr					
Permane	380C1F2 / 380C	21226	2929	171760	21226	2929	-171760	42,452	5,858	0	0	398,1013	42,452	0	5,858						
Wind an(	380C1F3 / 380C	21242	2598	171374	21242	2598	-171374	42,484	5,196	0	0	380,4158	42,484	0	5,196						
	Comp.conducto	5727	818	45658				5,727	0,818	45,658	1461,056	36,62778	5,727	45,658	0,818						
3	GW / opgw	10694	2855	62882	10694	2855	-62882	21,388	5,71	0	0	414,0811	21,388	0	5,71	3	3994,528	3607,287	253,769	124,829	58,592
Wind+ice	380C1F1 / 380C	35068	8894	246839	35068	8894	-246839	70,136	17,788	0	0	1127,548	70,136	0	17,788	Wind angle: 45 dgr					
Permane	380C1F2 / 380C	35114	8187	245655	35114	8187	-245655	70,228	16,374	0	0	899,1695	70,228	0	16,374						
Wind an(	380C1F3 / 380C	35170	7261	244243	35170	7261	-244243	70,34	14,522	0	0	992,5923	70,34	0	14,522						
	Comp.conducto	21677	4198	124829				21,677	4,198	124,829	3994,528	173,8965	21,677	124,829	4,198						
4	GW / opgw	3595	555	25376	3595	555	-25376	7,19	1,11	0	0	93,8679	7,19	0	1,11	4	1655,008	1455,906	160,512	51,719	19,354
Construc	380C1F1 / 380C	24310	3184	173546	24310	3184	-173546	48,62	6,368	0	0	507,3422	48,62	0	6,368	Wind angle: 45 dgr					
Permane	380C1F2 / 380C	24320	2930	173289	24320	2930	-173289	48,64	5,86	0	0	425,4624	48,64	0	5,86						
Wind an(	380C1F3 / 380C	24331	2599	172985	24331	2599	-172985	48,662	5,198	0	0	389,5521	48,662	0	5,198						
	Comp.conducto	7400	818	51719				7,4	0,818	51,719	1655,008	39,681	7,4	51,719	0,818						
1a	GW / opgw	2378	5558	42605	2378	5558	-42605	4,756	11,116	0	0	643,47	4,756	0	11,116	1a	2269,92	9528,391	121,989	70,935	193,69
Wind, 10 (	380C1F1 / 380C2	18557	31862	266391	18557	31862	-266391	37,114	63,724	0	0	3094,977	37,114	0	63,724	Wind angle: 90 dgr					
Permaner	380C1F2 / 380C2	18677	29324	253834	18677	29324	-253834	37,354	58,648	0	0	2276,059	37,354	0	58,648						
Wind angl	380C1F3 / 380C2	18856	26007	237467	18856	26007	-237467	37,712	52,014	0	0	3242,648	37,712	0	52,014						
	Comp.conductor	5053	8188	70935				5,053	8,188	70,935	2269,92	271,2377	5,053	70,935	8,188						
1b	GW / opgw	2707	1110	23942	2707	1110	-23942	5,414	2,22	0	0	148,1957	5,414	0	2,22	1b	1510,72	2286,638	137,183	47,21	38,69
Wind, -20	380C1F1 / 380C2	20966	6364	178260	20966	6364	-178260	41,932	12,728	0	0	770,4081	41,932	0	12,728	Wind angle: 90 dgr					
Permaner	380C1F2 / 380C2	21013	5858	177033	21013	5858	-177033	42,026	11,716	0	0	607,1107	42,026	0	11,716						
Wind angl	380C1F3 / 380C2	21071	5195	175563	21071	5195	-175563	42,142	10,39	0	0	698,2259	42,142	0	10,39						
	Comp.conductor	5669	1636	47210				5,669	1,636	47,21	1510,72	62,69793	5,669	47,21	1,636						
3	GW / opgw	10498	5712	68402	10498	5712	-68402	20,996	11,424	0	0	732,3364	20,996	0	11,424	3	4194,72	6343,981	249,238	131,085	117,206
Wind+ice,	380C1F1 / 380C2	34325	17792	268289	34325	17792	-268289	68,65	35,584	0	0	1939,611	68,65	0	35,584	Wind angle: 90 dgr					
Permaner	380C1F2 / 380C2	34456	16376	264167	34456	16376	-264167	68,912	32,752	0	0	1482,974	68,912	0	32,752						
Wind angl	380C1F3 / 380C2	34623	14524	259140	34623	14524	-259140	69,246	29,048	0	0	1881,208	69,246	0	29,048						
	Comp.conductor	21434	8398	131085				21,434	8,398	131,085	4194,72	307,8531	21,434	131,085	8,398						
4	GW / opgw	3561	1111	26367	3561	1111	-26367	7,122	2,222	0	0	155,84	7,122	0	2,222	4	1689,12	2363,233	159,493	52,785	38,713
Constructi	380C1F1 / 380C2	24131	6368	178459	24131	6368	-178459	48,262	12,736	0	0	798,6914	48,262	0	12,736	Wind angle: 90 dgr					
Permaner	380C1F2 / 380C2	24166	5861	177476	24166	5861	-177476	48,332	11,722	0	0	635,1361	48,332	0	11,722						
Wind angl	380C1F3 / 380C2	24208	5198	176302	24208	5198	-176302	48,416	10,396	0	0	707,7474	48,416	0	10,396						
	Comp.conductor	7361	1637	52785				7,361	1,637	52,785	1689,12	65,81783	7,361	52,785	1,637						
1a	GW / opgw	2507	2777	28392	2507	2777	-28392	5,014	5,554	0	0	333,1357	5,014	0	5,554	1a	1627,84	4991,759	128,746	50,87	96,796
Wind, 10 (	380C1F1 / 380C2	19603	15922	189892	19603	15922	-189892	39,206	31,844	0	0	1637,722	39,206	0	31,844	Wind angle: -45 dgr					
Permaner	380C1F2 / 380C2	19719	14655	184448	19719	14655	-184448	39,438	29,31	0	0	1229,082	39,438	0	29,31						
Wind angl	380C1F3 / 380C2	19876	12998	177650	19876	12998	-177650	39,752	25,996	0	0	1651,137	39,752	0	25,996						
	Comp.conductor	5336	4092	50870				5,336	4,092	50,87	1627,84	140,6822	5,336	50,87	4,092						
1b	GW / opgw	2757	555	22506	2757	555	-22506	5,514	1,11	0	0	86,47674	5,514	0	1,11	1b	1461,056	1381,455	138,601	45,658	19,346
Wind, -20	380C1F1 / 380C2	21212	3182	172085	21212	3182	-172085	42,424	6,364	0	0	479,8338	42,424	0	6,364	Wind angle: -45 dgr					
Permaner	380C1F2 / 380C2	21226	2929	171760	21226	2929	-171760	42,452	5,858	0	0	398,1013	42,452	0	5,858						
Wind angl	380C1F3 / 380C2	21242	2598	171374	21242	2598	-171374	42,484	5,196	0	0	380,4158	42,484	0	5,196						
	Comp.conductor	5727	818	45658				5,727	0,818	45,658	1461,056	36,62778	5,727	45,658	0,818						
3	GW / opgw	10694	2855	62882	10694	2855	-62882	21,388	5,71	0	0	414,0811	21,388	0	5,71	3	3994,528	3607,287	253,769	124,829	58,592
Wind+ice,	380C1F1 / 380C2	35068	8894	246839	35068	8894	-246839	70,136	17,788	0	0	1127,548	70,136	0	17,788	Wind angle: -45 dgr					
Permaner	380C1F2 / 380C2	35114	8187	245655	35114	8187	-245655	70,228	16,374	0	0	899,1695	70,228	0	16,374						
Wind angl	380C1F3 / 380C2	35170	7261	244243	35170	7261	-244243	70,34	14,522	0	0	992,5923	70,34	0	14,522						
	Comp.conductor	21677	4198	124829				21,677	4,198	124,829	3994,528	173,8965	21,677	124,829	4,198						
4	GW / opgw	3595	555	25376	3595	555	-25376	7,19	1,11	0	0	93,8679	7,19	0	1,11	4	1655,008	1455,906	160,512	51,719	19,354
Constructi	380C1F1 / 380C2	24310	3184	173546	24310	3184	-173546	48,62	6,368	0	0	507,3422	48,62	0	6,368	Wind angle: -45 dgr					
Permaner	380C1F2 / 380C2	24320	2930	173289	24320	2930	-173289	48,64	5,86	0	0	425,4624	48,64	0	5,86						
Wind angl	380C1F3 / 380C2	24331	2599	172985	24331	2599	-172985	48,662	5,198	0	0	389,5521	48,662	0	5,198						
	Comp.conductor	7400	818	51719				7,4	0,818	51,719	1655,008	39,681	7,4	51,719	0,818						
1a	GW / opgw	2052	0	15241	2052	0	-15241	4,104	0	0	0	18,09864	4,104	0	0	1a	1012,16	349,06	102,687	31,63	0
Wind, 10 (	380C1F1 / 380C2	15721	0	116969	15721	0	-116969	31,442	0	0	0	138,6592	31,442	0	0	Wind angle: 0 dgr					
Permaner	380C1F2 / 380C2	15721	0	116969	15721	0	-116969	31,442	0	0	0	138,6592	31,442	0	0						
Wind angl	380C1F3 / 380C2	15721	0	116969	15721	0	-116969	31,442	0	0	0	45,87388	31,442	0	0						
	Comp.conductor	4257	0	31630				4,257	0	31,63	1012,16	7,769025	4,257	31,63	0						
1b	GW / opgw	2110	0	17592	2110	0	-17592	4,22	0	0	0	18,6102	4,22	0	0	1b	1155,424	360,0719	105,919	36,107	0
Wind, -20	380C1F1 / 380C2	16222	0	137377	16222	0	-137377	32,444	0	0	0	143,078	32,444	0	0	Wind angle: 0 dgr					
Permaner	380C1F2 / 380C2	16222	0	137377	16222	0	-137377	32,444	0	0	0	143,078	32,444	0	0						
Wind angl	380C1F3 / 380C2	16222	0	137377	16222	0	-137377	32,444	0	0	0	47,3358	32,444	0	0						
	Comp.conductor	4367	0	36107				4,367	0	36,107	1155,424	7,969775	4,367	36,107	0						
3	GW / opgw	10152	0	58131	10152	0	-58131	20,304	0	0	0	89,54064	20,304	0	0	3	3744,992	752,91	223,48	117,031	0
Wind+ice,	380C1F1 / 380C2	30451	0	212407	30451	0	-212407	60,902	0	0	0	268,5778	60,902	0	0	Wind angle: 0 dgr					
Permaner	380C1F2 / 380C2	30451	0	212407	30451	0	-212407	60,902	0	0	0	268,5778	60,902	0	0						
Wind angl	380C1F3 / 380C2	30451	0	212407	30451	0	-212407	60,902	0	0	0	88,85602	60,902	0	0						
	Comp.conductor	20470	0	117031				20,47	0	117,031	3744,992	37,35775	20,47	117,031	0						
4	GW / opgw	2954	0	21182	2954	0	-21182	5,908	0	0	0	26,05428	5,908	0	0	4	1389,408	435,1541	128,138	43,419	0
Constructi	380C1F1 / 380C2	19362	0	142171	19362	0	-142171	38,724	0	0	0	170,7728	38,724	0	0	Wind angle: 0 dgr					
Permaner	380C1F2 / 380C2	19362	0	142171	19362	0	-142171	38,724	0	0	0	170,7728	38,724	0	0						
Wind angl	380C1F3 / 380C2	19362	0	142171	19362	0	-142171	38,724	0	0	0	56,49832	38,724	0	0						
	Comp.conductor	6058	0	43419				6,058	0	43,419	1389,408	11,05585	6,058	43,419	0						
6	GW / opgw	2052	0	15241	2052	0	-15241	4,104	0	0	0	18,09864	4,104	0	0	6	1012,16	349,06	102,687	31,63	0
Permaner	380C1F1 / 380C2	15721	0	116969	15721	0	-116969	31,442	0	0	0	138,6592	31,442	0	0	0					
Permaner	380C1F2 / 380C2	15721	0	116969	15721	0	-116969	31,442	0	0	0	138,6592	31,442	0	0						
	380C1F3 / 380C2	15721	0	116969	15721	0	-116969	31,442	0	0	0	45,87388	31,442	0	0						
	Comp.conductor	4257	0	31630				4,257	0	31,63	1012,16	7,769025	4,257	31,63	0						

1a	GW / opgw	1846	2777	26338	1846	2777	-26338	3,692	5,554	0	0	327,3057	3,692	0	5,554	1a	1452,992	4877,094	95,158	45,406	96,783					
Wind, 10	380C1F1 / 380C2	14473	15920	170920	14473	15920	-170920	28,946	31,84	0	0	1592,292	28,946	0	31,84	Wind angle: 45 dgr										
Permanen	380C1F2 / 380C2	14574	14653	164411	14574	14653	-164411	29,148	29,306	0	0	1183,559	29,148	0	29,306											
Wind ang	380C1F3 / 380C2	14716	12996	156136	14716	12996	-156136	29,432	25,992	0	0	1635,835	29,432	0	25,992											
	Comp.conductor	3940	4091	45406				3,94	4,091	45,406	1452,992	138,1025	3,94	45,406	4,091											
1b	GW / opgw	2083	555	18329	2083	555	-18329	4,166	1,11	0	0	80,53206	4,166	0	1,11	1b	1180,224	1267,57	105,194	36,882	19,34					
Wind, -20	380C1F1 / 380C2	16095	3181	140490	16095	3181	-140490	32,19	6,362	0	0	434,6099	32,19	0	6,362	Wind angle: 45 dgr										
Permanen	380C1F2 / 380C2	16114	2928	140022	16114	2928	-140022	32,228	5,856	0	0	352,9415	32,228	0	5,856											
Wind ang	380C1F3 / 380C2	16136	2597	139466	16136	2597	-139466	32,272	5,194	0	0	365,3939	32,272	0	5,194											
	Comp.conductor	4338	818	36882				4,338	0,818	36,882	1180,224	34,09285	4,338	36,882	0,818											
3	GW / opgw	10061	2855	60349	10061	2855	-60349	20,122	5,71	0	0	408,498	20,122	0	5,71	3	3822,016	3496,4	221,277	119,438	58,584					
Wind+ice.	380C1F1 / 380C2	30074	8893	222058	30074	8893	-222058	60,148	17,786	0	0	1083,409	60,148	0	17,786	Wind angle: 45 dgr										
Permanen	380C1F2 / 380C2	30127	8185	220631	30127	8185	-220631	60,254	16,37	0	0	855,0401	60,254	0	16,37											
Wind ang	380C1F3 / 380C2	30192	7260	218922	30192	7260	-218922	60,384	14,52	0	0	977,9439	60,384	0	14,52											
	Comp.conductor	20369	4198	119438				20,369	4,198	119,438	3822,016	171,5094	20,369	119,438	4,198											
4	GW / opgw	2938	555	21628	2938	555	-21628	5,876	1,11	0	0	88,07316	5,876	0	1,11	4	1404,544	1344,126	127,663	43,892	19,352					
Construct	380C1F1 / 380C2	19278	3183	144456	19278	3183	-144456	38,556	6,366	0	0	462,868	38,556	0	6,366	Wind angle: 45 dgr										
Permanen	380C1F2 / 380C2	19290	2930	144111	19290	2930	-144111	38,58	5,86	0	0	381,0978	38,58	0	5,86											
Wind ang	380C1F3 / 380C2	19305	2599	143701	19305	2599	-143701	38,61	5,198	0	0	374,8862	38,61	0	5,198											
	Comp.conductor	6041	818	43892				6,041	0,818	43,892	1404,544	37,20083	6,041	43,892	0,818											
1a	GW / opgw	1759	5558	41595	1759	5558	-41595	3,518	11,116	0	0	638,0104	3,518	0	11,116	1a	2173,248	9419,138	89,964	67,914	193,675					
Wind, 10	380C1F1 / 380C2	13692	31860	256162	13692	31860	-256162	27,384	63,72	0	0	3051,883	27,384	0	63,72	Wind angle: 90 dgr										
Permanen	380C1F2 / 380C2	13772	29322	242674	13772	29322	-242674	27,544	58,644	0	0	2232,653	27,544	0	58,644											
Wind ang	380C1F3 / 380C2	13896	26004	224878	13896	26004	-224878	27,792	52,008	0	0	3227,807	27,792	0	52,008											
	Comp.conductor	3726	8187	67914				3,726	8,187	67,914	2173,248	268,784	3,726	67,914	8,187											
1b	GW / opgw	2022	1110	20289	2022	1110	-20289	4,044	2,22	0	0	142,154	4,044	0	2,22	1b	1249,92	2171,117	103,341	39,06	38,681					
Wind, -20	380C1F1 / 380C2	15776	6363	149166	15776	6363	-149166	31,552	12,726	0	0	724,5403	31,552	0	12,726	Wind angle: 90 dgr										
Permanen	380C1F2 / 380C2	15834	5856	147471	15834	5856	-147471	31,668	11,712	0	0	561,2879	31,668	0	11,712											
Wind ang	380C1F3 / 380C2	15907	5194	145421	15907	5194	-145421	31,814	10,388	0	0	681,0348	31,814	0	10,388											
	Comp.conductor	4263	1635	39060				4,263	1,635	39,06	1249,92	60,09998	4,263	39,06	1,635											
3	GW / opgw	9857	5711	66247	9857	5711	-66247	19,714	11,422	0	0	726,5707	19,714	0	11,422	3	4037,728	6231,034	216,298	126,179	117,187					
Wind+ice.	380C1F1 / 380C2	29261	17789	247330	29261	17789	-247330	58,522	35,578	0	0	1894,67	58,522	0	35,578	Wind angle: 90 dgr										
Permanen	380C1F2 / 380C2	29398	16373	242552	29398	16373	-242552	58,796	32,746	0	0	1438,146	58,796	0	32,746											
Wind ang	380C1F3 / 380C2	29577	14522	236677	29577	14522	-236677	59,154	29,044	0	0	1866,238	59,154	0	29,044											
	Comp.conductor	20112	8397	126179				20,112	8,397	126,179	4037,728	305,4084	20,112	126,179	8,397											
4	GW / opgw	2897	1110	22886	2897	1110	-22886	5,794	2,22	0	0	149,8715	5,794	0	2,22	4	1448,512	2250,107	126,387	45,266	38,702					
Construct	380C1F1 / 380C2	19054	6366	150988	19054	6366	-150988	38,108	12,732	0	0	753,7283	38,108	0	12,732	Wind angle: 90 dgr										
Permanen	380C1F2 / 380C2	19097	5860	149694	19097	5860	-149694	38,194	11,72	0	0	590,3555	38,194	0	11,72											
Wind ang	380C1F3 / 380C2	19149	5197	148141	19149	5197	-148141	38,298	10,394	0	0	692,8627	38,298	0	10,394											
	Comp.conductor	5993	1636	45266				5,993	1,636	45,266	1448,512	63,28923	5,993	45,266	1,636											
1a	GW / opgw	1846	2777	26338	1846	2777	-26338	3,692	5,554	0	0	327,3057	3,692	0	5,554	1a	1452,992	4877,094	95,158	45,406	96,783					
Wind, 10	380C1F1 / 380C2	14473	15920	170920	14473	15920	-170920	28,946	31,84	0	0	1592,292	28,946	0	31,84	Wind angle: -45 dgr										
Permanen	380C1F2 / 380C2	14574	14653	164411	14574	14653	-164411	29,148	29,306	0	0	1183,559	29,148	0	29,306											
Wind ang	380C1F3 / 380C2	14716	12996	156136	14716	12996	-156136	29,432	25,992	0	0	1635,835	29,432	0	25,992											
	Comp.conductor	3940	4091	45406				3,94	4,091	45,406	1452,992	138,1025	3,94	45,406	4,091											
1b	GW / opgw	2083	555	18329	2083	555	-18329	4,166	1,11	0	0	80,53206	4,166	0	1,11	1b	1180,224	1267,57	105,194	36,882	19,34					
Wind, -20	380C1F1 / 380C2	16095	3181	140490	16095	3181	-140490	32,19	6,362	0	0	434,6099	32,19	0	6,362	Wind angle: -45 dgr										
Permanen	380C1F2 / 380C2	16114	2928	140022	16114	2928	-140022	32,228	5,856	0	0	352,9415	32,228	0	5,856											
Wind ang	380C1F3 / 380C2	16136	2597	139466	16136	2597	-139466	32,272	5,194	0	0	365,3939	32,272	0	5,194											
	Comp.conductor	4338	818	36882				4,338	0,818	36,882	1180,224	34,09285	4,338	36,882	0,818											
3	GW / opgw	10061	2855	60349	10061	2855	-60349	20,122	5,71	0	0	408,498	20,122	0	5,71	3	3822,016	3496,4	221,277	119,438	58,584					
Wind+ice.	380C1F1 / 380C2	30074	8893	222058	30074	8893	-222058	60,148	17,786	0	0	1083,409	60,148	0	17,786	Wind angle: -45 dgr										
Permanen	380C1F2 / 380C2	30127	8185	220631	30127	8185	-220631	60,254	16,37	0	0	855,0401	60,254	0	16,37											
Wind ang	380C1F3 / 380C2	30192	7260	218922	30192	7260	-218922	60,384	14,52	0	0	977,9439	60,384	0	14,52											
	Comp.conductor	20369	4198	119438				20,369	4,198	119,438	3822,016	171,5094	20,369	119,438	4,198											
4	GW / opgw	2938	555	21628	2938	555	-21628	5,876	1,11	0	0	88,07316	5,876	0	1,11	4	1404,544	1344,126	127,663	43,892	19,352					
Construct	380C1F1 / 380C2	19278	3183	144456	19278	3183	-144456	38,556	6,366	0	0	462,868	38,556	0	6,366	Wind angle: -45 dgr										
Permanen	380C1F2 / 380C2	19290	2930	144111	19290	2930	-144111	38,58	5,86	0	0	381,0978	38,58	0	5,86											
Wind ang	380C1F3 / 380C2	19305	2599	143701	19305	2599	-143701	38,61	5,198	0	0	374,8862	38,61	0	5,198											
	Comp.conductor	6041	818	43892				6,041	0,818	43,892	1404,544	37,20083	6,041	43,892	0,818											

W2S400A+ 27-AH2

Hoogte mast	Ber & bijlage	62	m		
Hoogte onderste stroomdraad (F3)		36	m		
		Hoogte		Excentriciteit ophanging t.o.v. hart mast	
Bliksemdraad = GW / CH_{mast} -	0,716	m =	61,284	m	1,459 m
1e traverse - 380C1F1 F2 +	10	m =	56	m	4,41 m
2e traverse - 380C1F2 F3 +	10	m =	46	m	4,41 m
3e traverse - 380C1F3			36	m	4,41 m
Passieve lijn = Comp C. F3 -	4	m =	32	m	1,825 m

Uit mast			Uit lijnen					
ULS (incl bel factoren)			SLS					
N	V	M	Nmin	Nmax	Vmax	Mlangs;max	Mdwars;max	
[kN]	[kN]	[kNm]	[kN]	[kN]	[kN]	[kNm]	[kNm]	
481	118,1271	3523,319	104	195	129	3236	6426	

			Belastingen uit lijnen					Belasting uit mast		
			M_{langs}	M_{dwars}	N	V_{langs}	V_{dwars}	N	V	M
SLS	0 deg	1a	**1106**	**387**	114	**35**	**0**	401	79	2349
		1b	1254	398	117	39	**0**	401	79	2349
		3	3045	658	**195**	95	**0**	401	79	2349
		4	1363	444	131	43	**0**	401	79	2349
	45 deg	1a	1309	3407	109	41	65	401	79	2349
		1b	1264	1004	117	40	13	401	79	2349
		3	3094	2488	194	97	39	401	79	2349
		4	1370	1051	131	43	13	401	79	2349
	90 deg	1a	1734	**6426**	**104**	54	**129**	401	79	2349
		1b	1293	1607	116	40	26	401	79	2349
		3	**3236**	4311	191	**101**	78	401	79	2349
		4	1390	1656	130	43	26	401	79	2349
	-45 deg	1a	1309	3407	109	41	65	401	79	2349
		1b	1264	1004	117	40	13	401	79	2349
		3	3094	2488	194	97	39	401	79	2349
		4	1370	1051	131	43	13	401	79	2349

regel		Loadcase	Totaal M_{langs}	M_{dwars}	N	V_{langs}	V_{dwars}	Totaal moment	M langs max	M dwars max	N max	V langs max	V dwars max	M tot max	N min
1 Perm load 1,2	0 deg	1a	3455	2735	515	113	79	4406,452	1						
2 Perm load 1,2	0 deg	1b	3603	2747	518	118	79	4530,789	2						
3 Perm load 1,2	0 deg	3	5393	3007	596	174	79	6175,116	3		x				
4 Perm load 1,2	0 deg	4	3712	2793	532	121	79	4645,447	4						
5									5						
6 Perm load 1,2	45 deg	1a	3658	5756	510	120	143	6819,742	6						
7 Perm load 1,2	45 deg	1b	3613	3352	518	118	92	4928,728	7						
8 Perm load 1,2	45 deg	3	5443	4837	595	175	118	7281,674	8						
9 Perm load 1,2	45 deg	4	3719	3400	531	122	92	5038,46	9						
10									10						
11 Perm load 1,2	90 deg	1a	4083	8775	505	133	208	9678,391	11	x		x	x	x	
12 Perm load 1,2	90 deg	1b	3641	3956	517	119	105	5377,007	12						
13 Perm load 1,2	90 deg	3	5585	6660	592	180	157	8691,784	13	x		x			
14 Perm load 1,2	90 deg	4 Construct	3739	4005	531	122	105	5479,028	14						
15									15						
16 Perm load 1,2	-45 deg	1a	2970	5756	510	120	143	6476,838	16						
17 Perm load 1,2	-45 deg	1b	2925	3352	518	118	92	4449,092	17						
18 Perm load 1,2	-45 deg	3	4755	4837	595	175	118	6782,802	18						
19 Perm load 1,2	-45 deg	4	3031	3400	531	122	92	4554,397	19						
			5585	8775	596	180	208	9678							
					505										

samenvatting

	Mast	Bijlage	Wind	Loadcase	M_{langs}	M_{dwars}	N	V_{langs}	V_{dwars}
11	W2S400A+ 27-AH2		Perm load :90 deg	1a	4083	8775	505	133	208
13	W2S400A+ 27-AH2		Perm load :90 deg	3	5585	6660	592	180	157
	W2S400A+ 27-AH2	#N/B	#N/B	#N/B	#N/B	#N/B	#N/B	#N/B	#N/B
	W2S400A+ 27-AH2	#N/B	#N/B	#N/B	#N/B	#N/B	#N/B	#N/B	#N/B
	W2S400A+ 27-AH2	#N/B	#N/B	#N/B	#N/B	#N/B	#N/B	#N/B	#N/B
	W2S400A+ 27-AH2	#N/B	#N/B	#N/B	#N/B	#N/B	#N/B	#N/B	#N/B

W2S400A+10 (Afs.com p.gl) TOWER (rev Appendix AH2
Loadcases for tower strength (serviceabilitylimit state)
-
Loadcase according to 50341-3-15

		AHEAD			BACK		Totaal		
	[N]	[N]	[N]	[N]	[N]		Vert	Dwars	Langs
	Attachment point						[kN]	[kN]	[kN]
1a	GW / opgv2274	0	16659	2274	0	-16659	4,548	0	0
Wind, 10	380C1F1 / 17408	0	127555	17408	0	-127555	34,816	0	0
Permanen	380C1F2 / 17408	0	127555	17408	0	-127555	34,816	0	0
Wind ang	380C1F3 / 17408	0	127555	17408	0	-127555	34,816	0	0
	Comp.con 4716	0	34554				4,716	0	34,554
1b	GW / opgv2333	0	19101	2333	0	-19101	4,666	0	0
Wind, -20	380C1F1 / 17924	0	148566	17924	0	-148566	35,848	0	0
Permanen	380C1F2 / 17924	0	148566	17924	0	-148566	35,848	0	0
Wind ang	380C1F3 / 17924	0	148566	17924	0	-148566	35,848	0	0
	Comp.con 4830	0	39199				4,83	0	39,199
3	GW / opgv7718	0	47131	7718	0	-47131	15,436	0	0
Wind+ice,	380C1F1 / 27321	0	194979	27321	0	-194979	54,642	0	0
Permanen	380C1F2 / 27321	0	194979	27321	0	-194979	54,642	0	0
Wind ang	380C1F3 / 27321	0	194979	27321	0	-194979	54,642	0	0
	Comp.con 15611	0	95143				15,611	0	95,143
4	GW / opgv2877	0	20717	2877	0	-20717	5,754	0	0
Constructi	380C1F1 / 19856	0	145177	19856	0	-145177	39,712	0	0
Permanen	380C1F2 / 19856	0	145177	19856	0	-145177	39,712	0	0
Wind ang	380C1F3 / 19856	0	145177	19856	0	-145177	39,712	0	0
	Comp.con 5921	0	42593				5,921	0	42,593
1a	GW / opgv2135	1851	22181	2135	1851	-22181	4,27	3,702	0
Wind, 10	380C1F1 / 16670	10612	152697	16670	10612	-152697	33,34	21,224	0
Permanen	380C1F2 / 16753	9767	149277	16753	9767	-149277	33,506	19,534	0
Wind ang	380C1F3 / 16863	8663	145065	16863	8663	-145065	33,726	17,326	0
	Comp.con 4532	2727	40900				4,532	2,727	40,9
1b	GW / opgv2322	370	19393	2322	370	-19393	4,644	0,74	0
Wind, -20	380C1F1 / 17873	2121	149786	17873	2121	-149786	35,746	4,242	0
Permanen	380C1F2 / 17881	1952	149601	17881	1952	-149601	35,762	3,904	0
Wind ang	380C1F3 / 17890	1731	149381	17890	1731	-149381	35,78	3,462	0
	Comp.con 4818	545	39503				4,818	0,545	39,503
3	GW / opgv7659	1902	48576	7659	1902	-48576	15,318	3,804	0
Wind+ice,	380C1F1 / 27121	5928	200039	27121	5928	-200039	54,242	11,856	0
Permanen	380C1F2 / 27150	5456	199280	27150	5456	-199280	54,3	10,912	0
Wind ang	380C1F3 / 27186	4839	198376	27186	4839	-198376	54,372	9,678	0
	Comp.con 15546	2797	96701				15,546	2,797	96,701
4	GW / opgv2869	370	20924	2869	370	-20924	5,738	0,74	0
Constructi	380C1F1 / 19819	2122	146166	19819	2122	-146166	39,638	4,244	0
Permanen	380C1F2 / 19824	1953	146016	19824	1953	-146016	39,648	3,906	0
Wind ang	380C1F3 / 19831	1732	145838	19831	1732	-145838	39,662	3,464	0
	Comp.con 5913	545	42810				5,913	0,545	42,81
1a	GW / opgv2018	3704	32012	2018	3704	-32012	4,036	7,408	0
Wind, 10	380C1F1 / 15799	21232	203903	15799	21232	-203903	31,598	42,464	0
Permanen	380C1F2 / 15909	19541	195191	15909	19541	-195191	31,818	39,082	0
Wind ang	380C1F3 / 16070	17331	183984	16070	17331	-183984	32,14	34,662	0
	Comp.con 4302	5456	54187				4,302	5,456	54,187
1b	GW / opgv2292	740	20228	2292	740	-20228	4,584	1,48	0
Wind, -20	380C1F1 / 17729	4242	153343	17729	4242	-153343	35,458	8,484	0
Permanen	380C1F2 / 17757	3904	152631	17757	3904	-152631	35,514	7,808	0
Wind ang	380C1F3 / 17791	3463	151780	17791	3463	-151780	35,582	6,926	0
	Comp.con 4784	1090	40392				4,784	1,09	40,392
3	GW / opgv7520	3805	52509	7520	3805	-52509	15,04	7,61	0
Wind+ice,	380C1F1 / 26629	11856	214027	26629	11856	-214027	53,258	23,712	0
Permanen	380C1F2 / 26718	10913	211307	26718	10913	-211307	53,436	21,826	0
Wind ang	380C1F3 / 26831	9679	208008	26831	9679	-208008	53,662	19,358	0
	Comp.con 15377	5594	101124				15,377	5,594	101,124
4	GW / opgv2849	740	21526	2849	740	-21526	5,698	1,48	0
Constructi	380C1F1 / 19714	4244	149073	19714	4244	-149073	39,428	8,488	0
Permanen	380C1F2 / 19735	3907	148488	19735	3907	-148488	39,47	7,814	0
Wind ang	380C1F3 / 19760	3465	147792	19760	3465	-147792	39,52	6,93	0
	Comp.con 5890	1091	43453				5,89	1,091	43,453
1a	GW / opgv2135	1851	22181	2135	1851	-22181	4,27	3,702	0
Wind, 10	380C1F1 / 16670	10612	152697	16670	10612	-152697	33,34	21,224	0
Permanen	380C1F2 / 16753	9767	149277	16753	9767	-149277	33,506	19,534	0
Wind ang	380C1F3 / 16863	8663	145065	16863	8663	-145065	33,726	17,326	0
	Comp.con 4532	2727	40900				4,532	2,727	40,9
1b	GW / opgv2322	370	19393	2322	370	-19393	4,644	0,74	0
Wind, -20	380C1F1 / 17873	2121	149786	17873	2121	-149786	35,746	4,242	0
Permanen	380C1F2 / 17881	1952	149601	17881	1952	-149601	35,762	3,904	0
Wind ang	380C1F3 / 17890	1731	149381	17890	1731	-149381	35,78	3,462	0
	Comp.con 4818	545	39503				4,818	0,545	39,503
3	GW / opgv7659	1902	48576	7659	1902	-48576	15,318	3,804	0
Wind+ice,	380C1F1 / 27121	5928	200039	27121	5928	-200039	54,242	11,856	0
Permanen	380C1F2 / 27150	5456	199280	27150	5456	-199280	54,3	10,912	0
Wind ang	380C1F3 / 27186	4839	198376	27186	4839	-198376	54,372	9,678	0
	Comp.con 15546	2797	96701				15,546	2,797	96,701
4	GW / opgv2869	370	20924	2869	370	-20924	5,738	0,74	0
Constructi	380C1F1 / 19819	2122	146166	19819	2122	-146166	39,638	4,244	0
Permanen	380C1F2 / 19824	1953	146016	19824	1953	-146016	39,648	3,906	0
Wind ang	380C1F3 / 19831	1732	145838	19831	1732	-145838	39,662	3,464	0
	Comp.con 5913	545	42810				5,913	0,545	42,81

Belastingen op mastvoet, per lijn

	M_{langs}	M_{dwars}	N	V_{langs}	V_{dwars}
	0	20,05668	4,548	0	0
	0	153,5386	34,816	0	0
	0	153,5386	34,816	0	0
	0	50,79654	34,816	0	0
	1105,728	8,6067	4,716	34,554	0
	0	20,57706	4,666	0	0
	0	158,0897	35,848	0	0
	0	158,0897	35,848	0	0
	0	52,30223	35,848	0	0
	1254,368	8,81475	4,83	39,199	0
	0	68,07276	15,436	0	0
	0	240,9712	54,642	0	0
	0	240,9712	54,642	0	0
	0	79,72268	54,642	0	0
	3044,576	28,49008	15,611	95,143	0
	0	25,37514	5,754	0	0
	0	175,1299	39,712	0	0
	0	175,1299	39,712	0	0
	0	57,93981	39,712	0	0
	1362,976	10,80583	5,921	42,593	0
	0	226,1427	4,27	0	3,702
	0	1123,333	33,34	0	21,224
	0	850,9855	33,506	0	19,534
	0	1111,013	33,726	0	17,326
	1308,8	95,5349	4,532	40,9	2,727
	0	61,92004	4,644	0	0,74
	0	352,7719	35,746	0	4,242
	0	298,2544	35,762	0	3,904
	0	264,3682	35,78	0	3,462
	1264,096	26,23285	4,818	39,503	0,545
	0	280,5764	15,318	0	3,804
	0	784,5832	54,242	0	11,856
	0	632,295	54,3	0	10,912
	0	672,4353	54,372	0	9,678
	3094,432	117,8755	15,546	96,701	2,797
	0	66,74458	5,738	0	0,74
	0	370,0276	39,638	0	4,244
	0	315,4637	39,648	0	3,906
	0	270,1546	39,662	0	3,464
	1369,92	28,23123	5,913	42,81	0,545
	0	432,6468	4,036	0	7,408
	0	2092,691	31,598	0	42,464
	0	1547,269	31,818	0	39,082
	0	2171,118	32,14	0	34,662
	1733,984	182,4432	4,302	54,187	5,456
	0	103,0954	4,584	0	1,48
	0	546,6338	35,458	0	8,484
	0	437,7047	35,514	0	7,808
	0	476,3671	35,582	0	6,926
	1292,544	43,6108	4,784	40,392	1,09
	0	492,4864	15,04	0	7,61
	0	1325,62	53,258	0	23,712
	0	1021,389	53,436	0	21,826
	0	1264,629	53,662	0	19,358
	3235,968	207,071	15,377	101,124	5,594
	0	108,0082	5,698	0	1,48
	0	564,3255	39,428	0	8,488
	0	455,3667	39,47	0	7,814
	0	482,3578	39,52	0	6,93
	1390,496	45,66125	5,89	43,453	1,091
	0	226,1427	4,27	0	3,702
	0	1123,333	33,34	0	21,224
	0	850,9855	33,506	0	19,534
	0	1111,013	33,726	0	17,326
	1308,8	95,5349	4,532	40,9	2,727
	0	61,92004	4,644	0	0,74
	0	352,7719	35,746	0	4,242
	0	298,2544	35,762	0	3,904
	0	264,3682	35,78	0	3,462
	1264,096	26,23285	4,818	39,503	0,545
	0	280,5764	15,318	0	3,804
	0	784,5832	54,242	0	11,856
	0	632,295	54,3	0	10,912
	0	672,4353	54,372	0	9,678
	3094,432	117,8755	15,546	96,701	2,797
	0	66,74458	5,738	0	0,74
	0	370,0276	39,638	0	4,244
	0	315,4637	39,648	0	3,906
	0	270,1546	39,662	0	3,464
	1369,92	28,23123	5,913	42,81	0,545

Belasting op mastvoet, belastinggeval

		M_{langs}	M_{dwars}	N	V_{langs}	V_{dwars}
1a		1105,728	386,537	113,712	34,554	0
Wind angle:	0 dgr					
1b		1254,368	397,8734	117,04	39,199	0
Wind angle:	0 dgr					
3		3044,576	658,228	194,973	95,143	0
Wind angle:	0 dgr					
4		1362,976	444,3806	130,811	42,593	0
Wind angle:	0 dgr					
1a		1308,8	3407,009	109,374	40,9	64,513
Wind angle:	45 dgr					
1b		1264,096	1003,547	116,75	39,503	12,893
Wind angle:	45 dgr					
3		3094,432	2487,765	193,778	96,701	39,047
Wind angle:	45 dgr					
4		1369,92	1050,622	130,599	42,81	12,899
Wind angle:	45 dgr					
1a		1733,984	6426,169	103,894	54,187	129,072
Wind angle:	90 dgr					
1b		1292,544	1607,412	115,922	40,392	25,788
Wind angle:	90 dgr					
3		3235,968	4311,194	190,773	101,124	78,1
Wind angle:	90 dgr					
4		1390,496	1655,719	130,006	43,453	25,803
Wind angle:	90 dgr					
1a		1308,8	3407,009	109,374	40,9	64,513
Wind angle:	-45 dgr					
1b		1264,096	1003,547	116,75	39,503	12,893
Wind angle:	-45 dgr					
3		3094,432	2487,765	193,778	96,701	39,047
Wind angle:	-45 dgr					
4		1369,92	1050,622	130,599	42,81	12,899
Wind angle:	-45 dgr					

Constructieberekening mastfundatie type A

Project:
Randstad 380kV Noordring

Opdrachtgever:
TenneT TSO

Revisie	Datum	Wijzigingen ten opzichte van vorige revisie
00	19-07-2013	Eerste uitgave
01	06-08-2013	Definitief. Externe review verwerkt
02	02-10-2013	T.b.v. 2e uitgave

Documentnummer: R3N-OWR-0003

Opsteller	*Controleur*	*Vrijgever*
A.L.A. van Noort Constructeur	P. de Jager Ontwerpmanager	Arjan Hogenboom Project Manager

Distributie

Naam	Bedrijf
Extern	
Guido Volman	TenneT TSO
Intern	
Arjan Hogenboom	BAM
Pieter de Jager	BAM
Eric van Rooijen	BAM
David van Loenen	BAM
Rob Bakker	BAM
Erwin ten Cate	BAM
Michael DeSmet	Fabricom
Hein Pijnappel	Mott MacDonald

Beheer

De documentbeheerder van de combinatie verzorgt de distributie. Alleen houders van een geregistreerde kopie ontvangen automatisch aanvullingen en/of wijzigingen. Het is de verantwoordelijkheid van de houders het document up to date te houden. De laatste versie is altijd beschikbaar in ThinkProject!

Indien documenten worden geprint, geldt het volgende: een geregistreerde kopie is geldig vanaf de datum van uitgifte. Bij uitgifte van een document met een hoger revisienummer verliest de voorgaande versie automatisch haar geldigheid. Kopiehouders dienen het voorblad van een ongeldige versie te markeren met een diagonale lijn samen met de tekst 'vervallen'.

Neem bij twijfel over de geldende versie contact op met de documentbeheerder.

Inhoudsopgave

1. Inleiding 5
1.1. Overzicht verschillende typen 5
1.1.1. Fundatietype A 6
1.1.2. Fundatietype B 6
1.1.3. Fundatietype C 7
1.1.4. Fundatietype D 7
1.1.5. Fundatietype F 8
1.2. Mastbeeld bij fundatie type A 9
1.3. Gerelateerde documenten 9
1.4. Openstaande punten 9
1.5. Revisiebeheer 10
2. Uitgangspunten en eisen 11
2.1. Uitgangspunten 11
2.2. Gehanteerde normen 11
2.3. Eisen 11
2.4. Vermoeiing 11
2.5. Materiaalgegevens 11
2.5.1. Betonkwaliteiten 11
2.5.2. Milieuklasse 12
2.5.3. Betondekking 12
2.5.4. Staalkwaliteiten 12
2.6. Veerconstante funderingspalen 12
3. Berekening poer type A 14
3.1. Geometrie 14
3.2. Belastingen en belastingcombinaties 14
3.2.1. Belastingsfactoren 14
3.2.2. Belastingsgevallen 15
3.2.3. Belastingcombinaties 17
3.3. Wisselende belastingen en vermoeiing 18
3.4. Berekening fundering 21
4. Verbinding mast-fundering 21

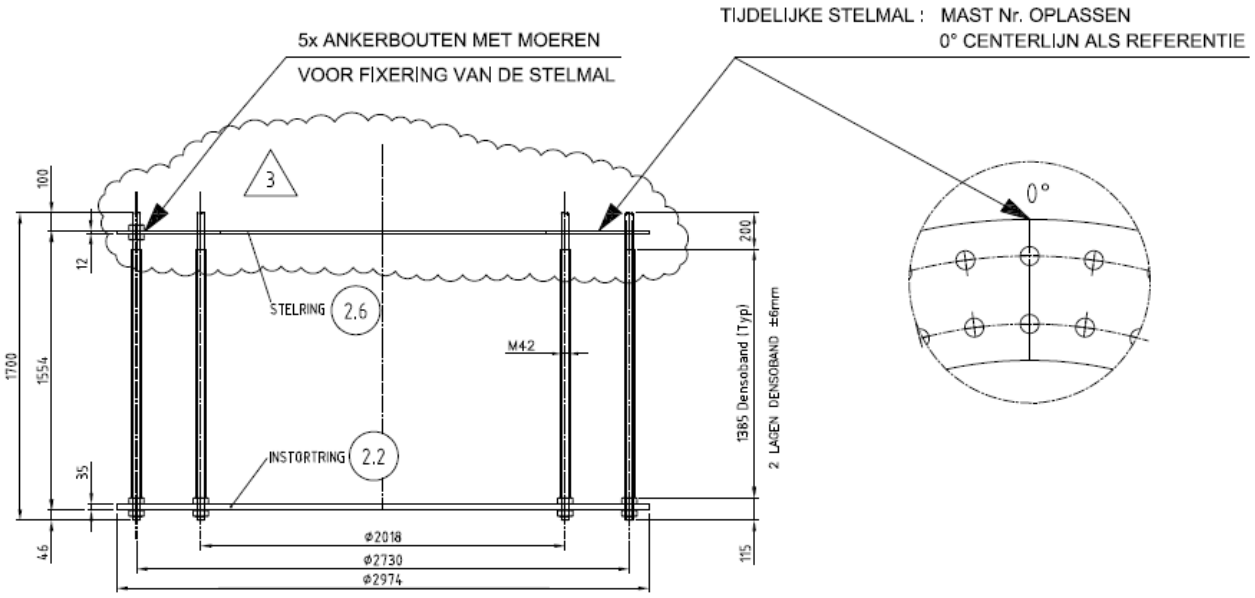

DETAIL VERANKERING

NOTA : ALLE RESTERENDE MOEREN EN ONDERLEGRINGEN WORDEN LOS MEEGELEVERD

Prepared by: LV Revision: 3 Date: 5-7-2011	Material: – Quantity: 2 Equipm. no.: W4E350	**VDL KTI**	Project No.: 36002 Workprep. No.: Pos. No.: ANKERKOOI	

..... 21

DE ANKERS EN PLATEN ZIJN BEREKEND DOOR VOLKER INFRA DESIGN BIJ HET ONTWERP VAN DE MASTEN. DE ANKERKOOI BEVINDT ZICH IN DE RONDE OPSTORT. DE RONDE OPSTORT IS D.M.V. STEKKEN VERBONDEN MET DE KRUISVORMIGE BALKEN. 21

DE STEKKEN WORDEN IN DE UO FASE BEREKEND. 21

5. Bijlagen 22
Bijlage 1 Uitvoer SCIA Engineer – lage E-waarde (model 1) 23
Bijlage 2 Uitvoer SCIA Engineer – Matige E-waarde (model 2) 24

1. INLEIDING

De komende jaren werken het ministerie van Economische Zaken en TenneT aan de aanleg van een nieuwe 380 kV hoogspanningsverbinding in de Randstad. De nieuwe verbinding stelt de voorziening van elektriciteit in de Randstad veilig.

Het ontwerptracé van de nieuwe Randstad 380 kV verbinding is sinds eind 2008 bekend. De plannen gaan uit van twee ringen, tussen Wateringen en Zoetermeer (de Zuidring) en tussen Zoetermeer en Beverwijk (de Noordring). Eind 2012 heeft Tennet de aanbesteding opgestart voor het gedeelte van de Noordring tussen station Vijfhuizen en Bleiswijk. Het contract is opgedeeld in twee percelen, waarbij de grens ligt bij Zuidelijke Ringvaart. Dit document heeft betrekking op perceel 2 (het zuidelijke gedeelte).

BAM heeft op 8 juli 2013 het contract ondertekend met TenneT voor het ontwerp en realiseren van perceel 2. Het voorliggende document is onderdeel van het Definitief Ontwerp en behandelt de mastfundaties. Dit betreft ook de masten welke ter plaatse van een OSP zijn gelokaliseerd. De overige onderdelen van de OSP's zijn in een afzonderlijk document berekend evenals de funderingspalen.

Dit rapport betreft een poer A. Op poer A worden de volgende masttypen geplaatst: W2S400 + 5, W2S350 + 5.

De wapening wordt in het UO ontwerp uitgewerkt.

1.1. OVERZICHT VERSCHILLENDE TYPEN

Binnen het project komen verschillende typen masten voor.
De verschillen komen voort uit:

- aantal systemen dat een mastenpaar draagt, 2 systemen (2x380 kV) of 4 systemen (2x380 kV en 2x150 kV),
- de functie van de mast, Steunmast, Hoekmast of Eindmast,
- maximale veldlengte tussen masten 350 of 400 m,
- aanpassingen aan mast (b.v. +10 m extra hoogte).

Elke mast heeft een eigen belastingpatroon. Na analyse van de verschillende belastingen en geometrische eisen zijn er uiteindelijk 5 mastfundatie typen bepaal. Met deze 5 typen is er voor elke mast een geschikte fundatie beschikbaar.

De fundatietypen zijn hieronder weergegeven.

1.1.1. FUNDATIETYPE A

Toegepast bij masttype:
W2S400 + 5
W2S350 + 5
W2S400A+10

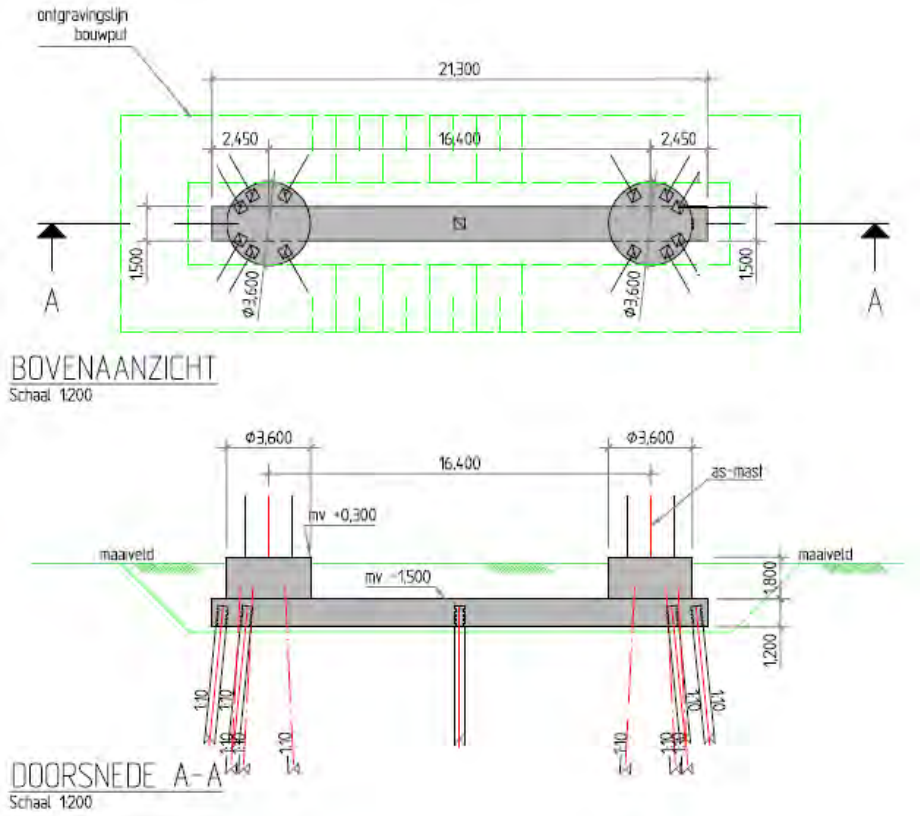

1.1.2. FUNDATIETYPE B

Toegepast bij masttype:
W4S400Z + 5
W2S400 + 24
W2S400 + 24
W4S400Z + 14

Opm: verschil met type A is diameter opstort.

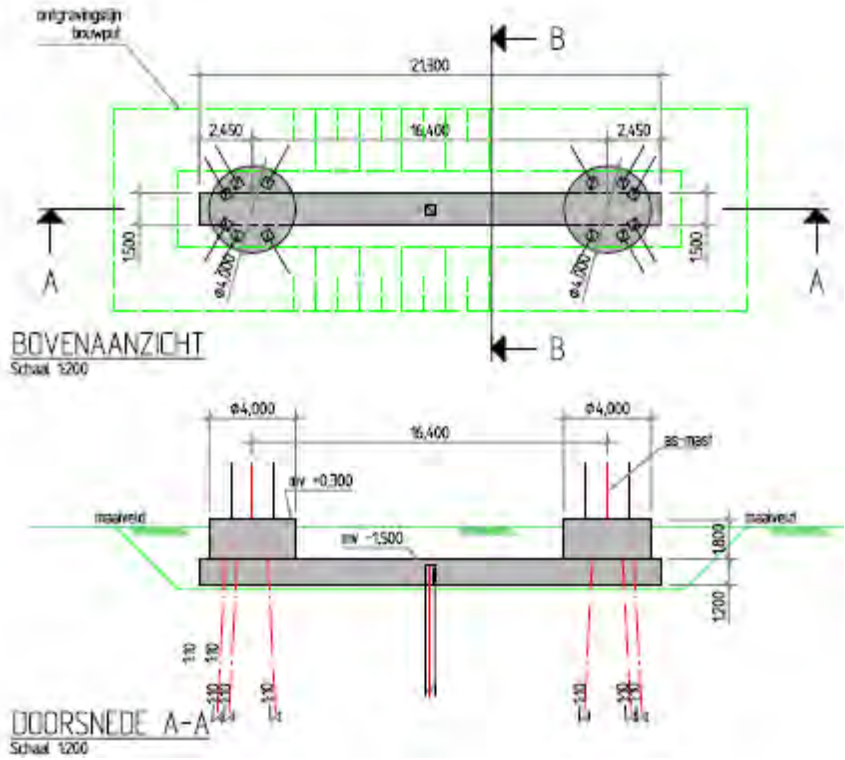

1.1.3. FUNDATIETYPE C

Toegepast bij masttype:
- W2H400 + 5
- W2H400 + 5
- W2H400 + 10
- W2H400 + 10 mast 133
- W2H400 + 15

Opm: mast 133 was in de oude nummering mast 82.

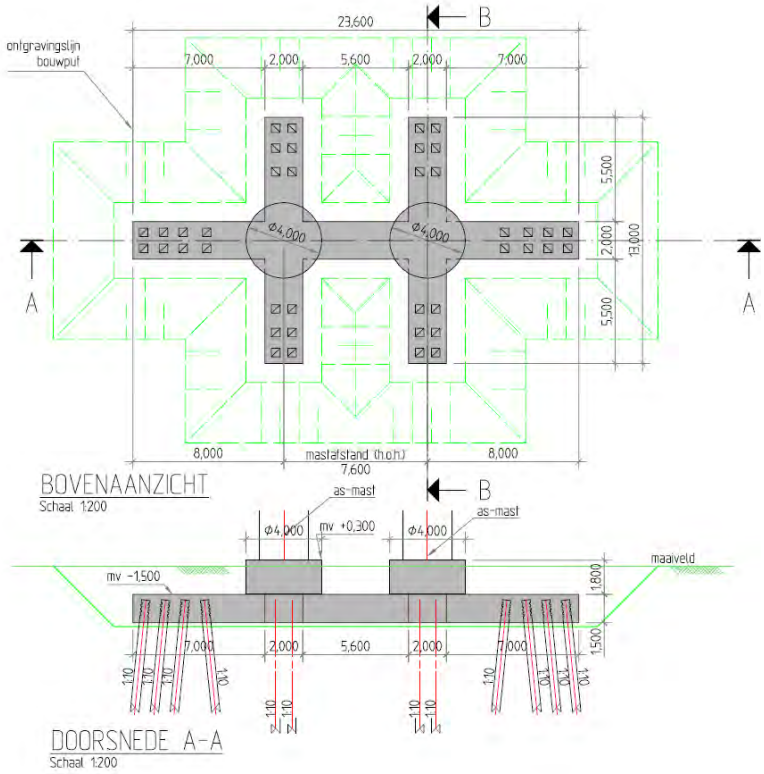

1.1.4. FUNDATIETYPE D

Toegepast bij masttype:
- W4H400Z + 5 (Afstap 150kV)
- W4H400Z +10 (Afstap 150kV)

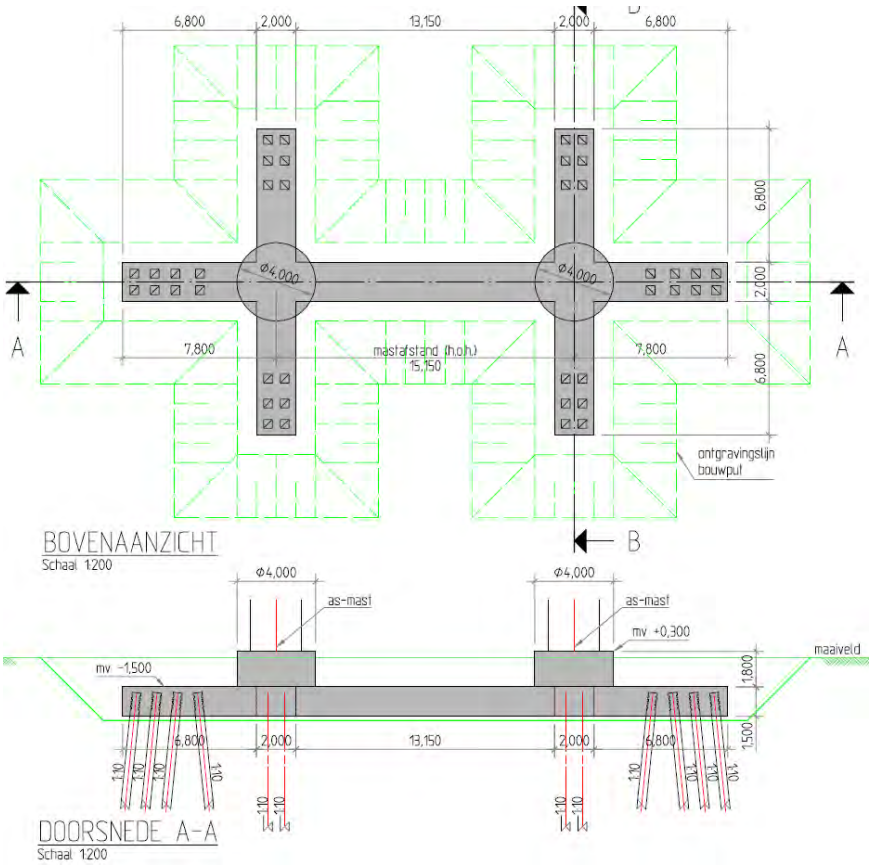

1.1.5. FUNDATIETYPE F

Toegepast bij masttype:
- W2E350 + 5
- W2E400
- W2E350

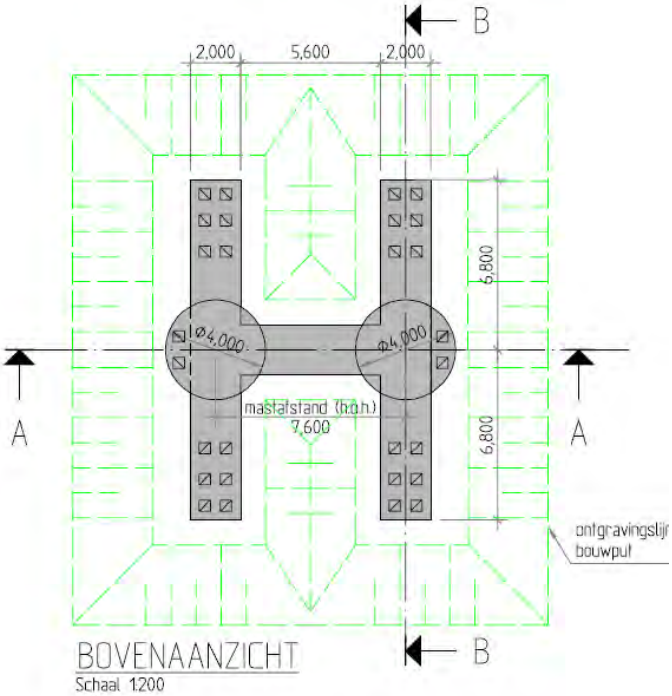

BOVENAANZICHT
Schaal 1:200

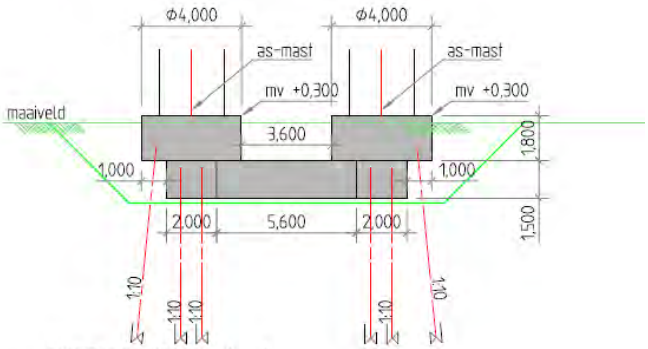

DOORSNEDE A-A
Schaal 1:200

1.2. MASTBEELD BIJ FUNDATIE TYPE A

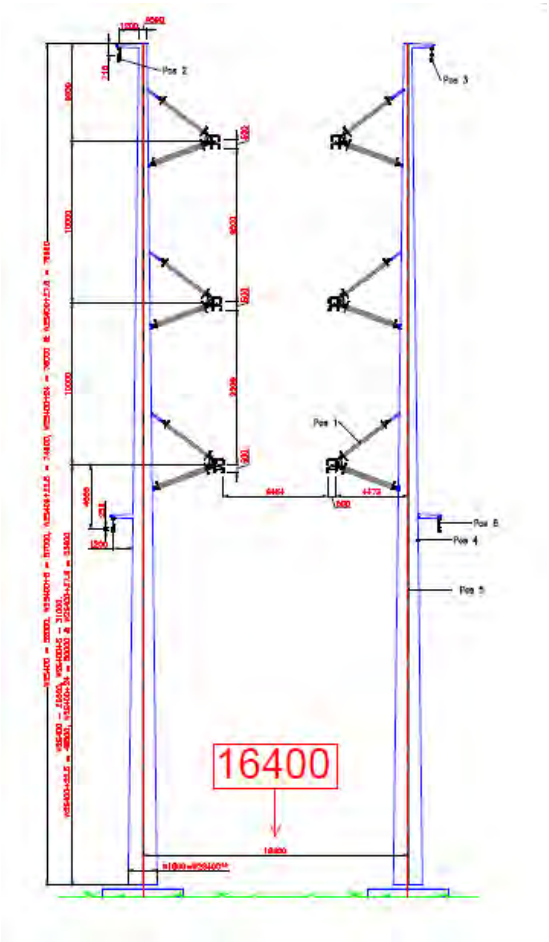

1.3. GERELATEERDE DOCUMENTEN

R3N-OWN-0001 Ontwerpnota Systeem Noordring
R3N-OWR-0003 Constructieberekening mastfundaties type A
R3N-OWR-0004 Constructieberekening mastfundaties type B
R3N-OWR-0005 Constructieberekening mastfundaties type C
R3N-OWR-0006 Constructieberekening mastfundaties type D
R3N-OWR-0007 Constructieberekening mastfundaties type F
R3N-OWR-0008 Ontwerpberekening paalfundering mastfundaties
R3N-OWR-0033 Bepaling belastingen mastfundaties
R3N-OWR-0039 Bemalingsadvies beheersgebied Rijnland
R3N-OWR-0040 Bemalingsadvies beheersgebied Schieland en de Krimpenerwaard

1.4. OPENSTAANDE PUNTEN

De volgende punten dienen in een latere fase nader uitgewerkt te worden:

- Aarding, de wijze van aarden kan invloed hebben op de vermoeiing van het wapeningsstaal.
- Temperatuursinvloeden op fundering
- Model verbeteren d.m.v. dummy elementen aan bovenzijde palen
- Invloed krimp op fundering
- Optimalisatie wapening
- Optimalisatie palen
- Detailontwerp prefab beton

1.5. REVISIEBEHEER

Aangepast in 2e uitgave
Er zijn nog vrijwel geen grondgegevens beschikbaar. Dit rapport is een principe berekening. Toegevoegd zijn enkele betonberekeningen. Daarnaast zijn er nu 2 modellen van de fundering gedraaid.

Aangepast in 3e uitgave
Dit is de 3e uitgave. In deze revisie is toegevoegd:

- Mastbeeld toegevoegd,
- Nadere uitwerking milieuklasse
- Masttype W2H400 + 15 was in het overzicht zowel bij poer type C als D genoemd. Mast komt op type C.
- Masttype W2S400A+10 ontbrak in het overzicht. Toegevoegd bij poertype A
- Toelichting koppeling mast met fundatie

2. UITGANGSPUNTEN EN EISEN

2.1. UITGANGSPUNTEN

Op de funderingen worden de lasten geplaatst zoals afgeleid in document R3N-OWR-0033 'Bepaling belasting mastfundaties'. Deze zijn afgeleid van de mastberekeningen zoals door TenneT beschikbaar gesteld.

2.2. GEHANTEERDE NORMEN

De eurocode serie NEN-EN-1990 tm 1997 wordt gehanteerd

NEN-EN50341

2.3. EISEN

De eisen zoals vermeld in ontwerpnota R3N-OWN-0001 §3 zijn gehanteerd bij het ontwerp.
Voor de masten gelden specifiek onderstaande eisen:

- De fundamenten van de staalconstructies ten behoeve van de masten worden gedimensioneerd op een maximale vervorming van 0.005 RAD onder representatieve waarden van de belastingen,
- Tot 1,5 m diepte mag de straalomtrek van de fundering niet groter zijn dan 1,0 m meer dan de straal van de mast,
- De ZRO-breedte tussen de (schoor)paalpunten en andere ondergrondse constructies van de masten is maximaal 2x 22 m voor de 2x 380kV (solo) verbinding en 2 x 27 m voor de 2 x 150 kV/380 kV (combi) verbinding.
- Tolerantie van mastlocatie naar buiten is 10 cm, tollerantie naar binnen is 0 cm.

2.4. VERMOEIING

De aan te leggen fundamenten worden gedimensioneerd op een vermoeiingsbelasting. De wisseling van belasting komt uit wind. Het aantal en de grote van de wisselingen gedurende 50 jaar is bepaald conform de ROK. De toetsingsprocedure van de constructie conform NEN-EN 1992-1-1:2005.

2.5. MATERIAALGEGEVENS

In onderstaande paragrafen worden de gehanteerde materiaaleigenschappen benoemd.

2.5.1. BETONKWALITEITEN

Voor het constructief beton worden bij de detaillering de volgende sterkteklassen aangehouden. De betonkwaliteit van de ronde opstort (C35/45) is voorgeschreven. Bij gescheurd beton wordt in eerste instantie gerekend met $E_{beton;gescheurd} \approx 1/3\ E_{beton;ongescheurd}$. Tevens is een ca. 2 x zo hoge E-modulus beschouwd.

Onderdeel	Sterkteklasse	Elastisciteitsmodulus [N/mm²]		
		ongescheurd	Gescheurd lage E	Gescheurd matige E
in het werk gestort gewapend beton:	C30/37	31.000	11.000	22.000
in het werk gestort gewapend beton, ronde opstort	C35/45	33.500		
geprefabriceerd beton (U-bakken):	C35/45	33.500		
geprefabriceerd voorgespannen beton (palen):	C45/55	36.000		

Tabel 2.5.1-1 Betonkwaliteiten

2.5.2. MILIEUKLASSE

Voor de betondelen welke meer dan 1,0 m onder maaiveld liggen geldt milieuklasse XC2
Voor de hoger gelegen betondelen is de milieuklasse afhankelijk van de aanwezigheid van openbare wegen. De wegen naar de OSP's zullen niet gestrooid worden en bovendien nauwelijks bereden worden, waardoor het wegspatten van water met dooizouten niet aan de orde is. De afstanden in onderstaande schets geldt voor snelwegen, bij ander wegen zou deze eventueel kleiner kunnen.

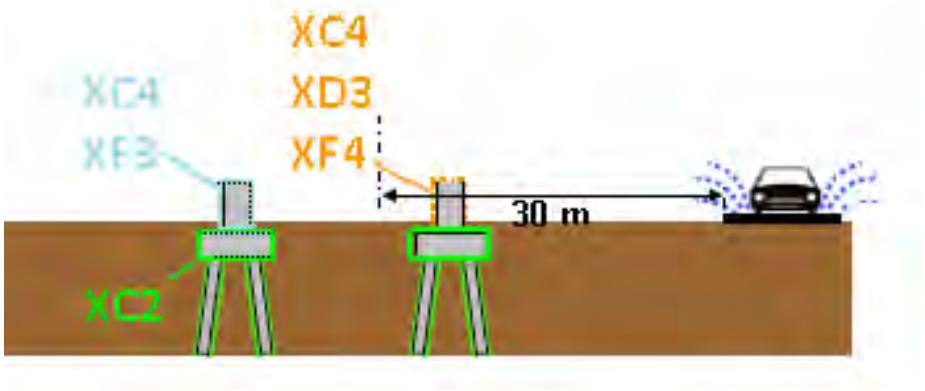

2.5.3. BETONDEKKING

Betondekking conform NEN EN 1992-1-1:2011

$$c_{min} = \max\{c_{min,b};\ c_{min,dur} + \Delta c_{dur,\gamma} - \Delta c_{dur,st} - \Delta c_{dur,add};\ 10\ mm\} \qquad (4.2)$$

waarin:

$c_{min,b}$	is de minimumdekking op basis van de aanhechtingseisen, zie 4.4.1.2 (3);
$c_{min,dur}$	is de minimumdekking op basis van de milieu-omstandigheden, zie 4.4.1.2 (5);
$\Delta c_{dur,\gamma}$	is een aanvullende veiligheidsmarge, zie 4.4.1.2 (6);
$\Delta c_{dur,st}$	is een reductie van de minimumdekking bij gebruik van roestvast staal, zie 4.4.1.2 (7);
$\Delta c_{dur,add}$	is een reductie van de minimumdekking bij gebruik van aanvullende bescherming, zie 4.4.1.2 (8).

De verwachting is dat $c_{min;b}$ maatgevend wordt. Deze warade is afhankelijk van de staafdiameter, welk enog niet bekend is. Betondekking wordt in UO bepaald.

2.5.4. STAALKWALITEITEN

Voor het wapeningsstaal worden de volgende staalkwaliteiten aangehouden:

Omschrijving	Kwaliteit
betonstaal (staven)	B500 B

Tabel 2.5.2 Staalkwaliteiten

2.6. VEERCONSTANTE FUNDERINGSPALEN

De constructie wordt gefundeerd op prefab betonpalen. De palen worden horizontaal gesteund door de grond wat resulteert in een horizontale beddingconstante op de funderingspaal. Verticaal wordt de funderingspaal gesteund door een verticale puntveer. Beide veerconstanten zijn bepaald door de geotechnische adviseur in rapport R3N-OWR-0008.

In het model wordt gerekend met een verticale veerstijfheid van 120.000 kN/m.
Voor de horizontale bedding worden onderstaande waarden aangehouden.

Bij de palen voor funderingstype A staan er geen palen in elkaars schaduw. De factor voor groepswerking is daarom niet aanwezig. De groepswerking reduceerde de stijfheid in rapport R3N-OWR-0008 tot resp 39% in Y richting en 54 % in X richting.
Zonder groepswerking zijn de waarden dus aanzienlijk hoger. Pas een factor van 1,5 op de gegeven horizontale bedding in X-richting toe voor de palen bij fundatietype A. Hiermee is er nog steeds een reductie tot 81% van de bedding van een vrijstaande paal.

In de volgende tabel wordt de gehanteerde beddingsconstanten gepresenteerd. Er wordt alleen met de lage veerstijfheid gerekend, omdta dzee resulteerd in de grootste vervormingen.

X-richting		Voor ESA berekeningen			
soort	b.k. laag			per m'paal	
	[m+ NAP]			$k_{h,rep,laag}$ [kN/m/m]	
Veen	-1.6			1,050	
Klei	-2.7			450	
Veen	-5.1			1,050	
Klei	-6.0			600	
Veen	-11.2			1,050	
Zand	-12.1			10,35	
Zand	-22.0			12,45	

Figuur 3 Horizontale beddingsconstanten per belastingsrichting

3. BEREKENING POER TYPE A

3.1. GEOMETRIE

De geometrie van de type A poeren is als volgt:

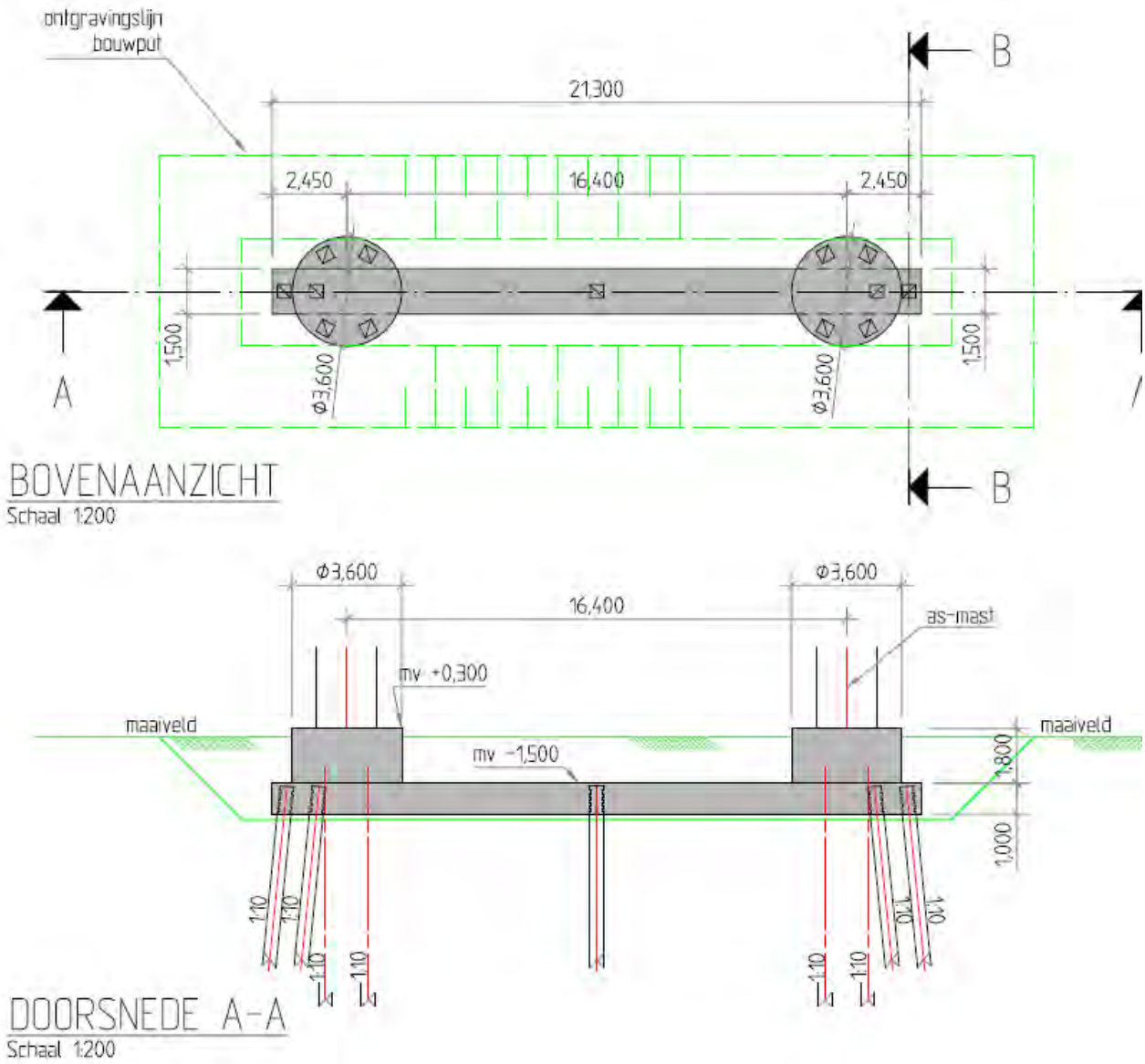

3.2. BELASTINGEN EN BELASTINGCOMBINATIES

3.2.1. BELASTINGSFACTOREN

De opdrachtgever schrijft veiligheidsklasse 3 voor in combinatie met de Eurocode. Voorlopig wordt gewerkt met CC3.

De belasting uit de poeren bestaat vooral uit lasten uit de mast cq lijnen. Deze lasten zijn, incl. partiële factoren gegeven door de opdrachtgever op basis van een rapport van KEMA.

Daarnaast zijn er lasten op de poeren zelf. Hiervoor geldt dat vergelijking 6.10 b van de EN 1990 maatgevend is. Gecombineerd met CC3 gelden de volgende partiële factoren:

γ_G (ongunstig)	=	1,3	
γ_G (gunstig)	=	0,9	(zie §3.2.2, op eigen gewicht fundering wordt factor 0,54 toegepast)
γ_Q	=	1,65	

Opm: De meeste lasten zijn door de klant incl de factoren gegeven. Bovenstaande factoren hebben dus alleen invloed op het eigen gewicht , grond en belastingen op maaiveld.

3.2.2. BELASTINGSGEVALLEN

Eigen gewichtpoer
Eigen gewicht van de betonconstructie wordt gegenereerd in het model. Er wordt gerekend met een eigengewicht voor beton van 2500 kg/m$^{3.}$

Omdat er ook trek op de palen komt, is eigen gewicht al snel een gunstige belasting (druk eenvoudiger op te nemen dan trek).Indien de poer zich onderwater bevindt zal er een opwaartse kracht gelijk aan het gewicht van het verplaatste water op de poer aanwezig zijn. Het effectieve gewicht van de poer reduceert hierdoor tot 1500 kg/m^3. Inclusief partiële factor van 0,9 volgt 1350 kg/m^3. In totaal bedraagt de factor dan dus 1350/2500 = 0,54.

Eigen gewicht grond op poer
Op de poer ligt 1,5 m grond. Indien het grondwater lager ligt, is de last:
1,5 * 17 = 25,5 kN/m^2

Bij waterstand gelijk aan 0,5m onder maaiveld niveau is de last:
0,5 * 17 + 1,0 * (17-10) = 15,5 kN/m^2

Inclusief partiële factor van 0,9 volgt 13,95 kN/m^2. In totaal bedraagt de factor dan dus 13,95/25,5 = 0,54.

Reken met droge grond en pas een partiële factor van 0,54 op eigen gewicht poer en grond toe in het geval deze gunstig werken.

Belastingen uit de mast
Zie rapport 'Afleiding belasting uit masten'.

Er wordt gerekend met de volgende, donker aangegeven ULS en SLS lasten uit het rapport. De overige lasten zijn met deze gevallen afgedekt.

Voor het variabele deel dat zijn oorsprong vindt in wind, wordt gerekend met:

ψ_0	ψ_1	ψ_2
0,6	0,2	0

ULS

Mast	Wind	Loadcase	M_{langs}	M_{dwars}	N	V_{langs}	V_{dwars}
W2S400+5	90 deg	1a	0	14507	565	0	374
W2S400+5	90 deg	3	0	10025	681	0	238
W2S400+5	45 deg	1a	3748	8380	424	113	218
W2S350+5	90 deg	1a	0	11432	419	0	327
W2S350+5	90 deg	3	0	8116	521	0	215
W2S350+5	45 deg	1a	2951	6660	315	98	192
W2S400A+10	0 deg	1a	4809	461	617	158	0
W2S400A+10	0 deg	3	4914	862	737	156	0
W2S400A+10	90 deg	1a	2270	13052	603	71	312

SLS

Type	Wind	Loadcase	M_{langs}	M_{dwars}	N	V_{langs}	V_{dwars}
W2S400+5	0 deg	1b	1805	3943	471	65	109
W2S400+5	45 deg	1a	2765	6731	471	88	176
W2S400+5	90 deg	1a	1805	10053	471	65	257
W2S400+5	90 deg	3	1805	8494	548	65	216
W2S350+5	45 deg	1a	2148	5387	350	75	156
W2S350+5	45 deg	1b	1397	3750	349	55	112
W2S350+5	90 deg	1a	1356	7975	350	54	226
W2S350+5	90 deg	3	1356	6860	417	54	193
W2S400A+10	90 deg	1a	4083	8775	505	133	208
W2S400A+10	90 deg	3	5585	6660	592	180	157

Belastingen op maaiveld
Op het maaiveld wordt gerekend met een verdeelde last van 10 kN/m^2 . Er is geen stempellast op de fundering voorzien. Echter, door spreiding van een puntlast over een diepte van 1,5 m, zal een lastvlak van 2 (breedte balk) x 3 (2*1,5) = 6 m^2 ontstaan, waardoor bij 10 kN/m^2 dus ook een puntlast van 60 kN toelaatbaar is.

Voor deze belastingen wordt in de combinatie gerekend met:

ψ_0	ψ_1	ψ_2
0,7	0,5	0,3

3.2.3. BELASTINGCOMBINATIES

Belastingcombinaties in ULS conform vergelijking 6.10b van NEN EN 1990, waarbij:
0,7 * 1,65 = 1,16

En de belastingsfactoren voor de last uit de masten reeds in de ingevoerde belasting is meegenomen (factor 1,0 toegepast).

ULS							
Belastinggeval	**Omschrijving**	**Combi 1**	**Combi 2**	**Combi 3**	**Combi 4**	**Combi 5**	**Combi 6**
1	Eigen gewicht	1,3	1,3	1,3	1,3	0,54	0,54
2	Grond	1,3	1,3	1,3	1,3	0,54	0,54
3	Belasting mast ULS 1	1,0		0,6		1,0	
4	Belasting mast ULS 2		1,0		0,6		1,0
7	Belasting op maaiveld	1,16	1,16	1,65	1,65		

SLS							
Belastinggeval	**Omschrijving**	**Combi 7**	**Combi 8**	**Combi 9**	**Comb i 10**	**Combi 11**	**Combi 12**
5	Eigen gewicht	1,0	1,0	1,0	1,0	0,6	0,6
6	Grond	1,0	1,0	1,0	1,0	0,6	0,6
5	Belasting mast SLS 1	1,0		0,6		1,0	
6	Belasting mast SLS 2		1,0		0,6		1,0
7	Belasting op maaiveld	0,7	0,7	1,0	1,0		

3.3. WISSELENDE BELASTINGEN EN VERMOEIING

Door de wisselende belastingen van wind dient belasting door vermoeiing te worden meegenomen. Bij vermoeiing is het aantal wisselingen en de grootte van de wisseling van belang. In de NEN-EN 1991-1-4:2005 is in bijlage B.3 een figuur opgenomen waarin de verhouding tussen de grootte van de windlast en het aantal keren dat deze optreedt weergegeven.

B.3 Aantal belastingen voor dynamische respons

(1) Figuur B.3 geeft het aantal keren N_g dat de waarden ΔS van een windeffect worden bereikt of overschreden gedurende een periode van 50 jaar. ΔS wordt uitgedrukt in percentage van de waarde S_k, waar S_k het effect is van een windbelasting met een herhalingstijd van 50 jaar.

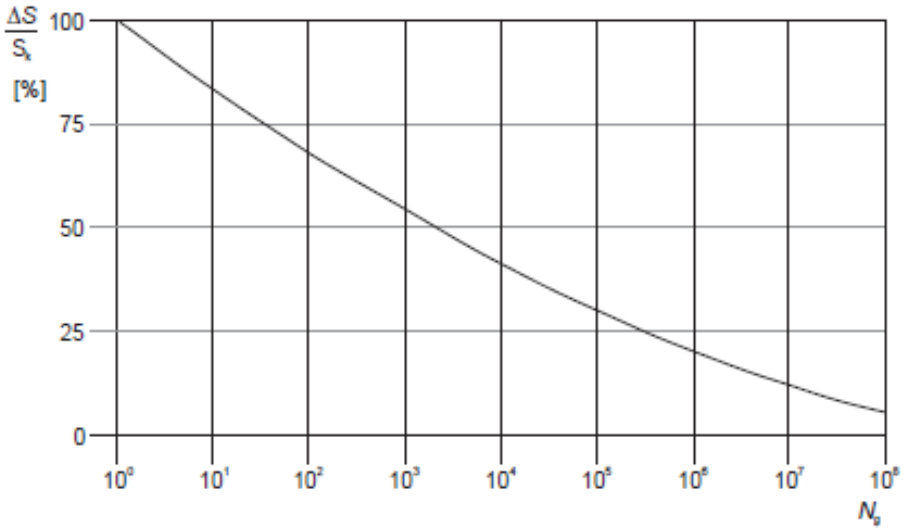

Figuur B.3 — Aantal windvlaagbelastingen N_g voor een effect $\Delta S/S_k$ gedurende een herhalingstijd van 50 jaar

De relatie wordt omschreven met de volgende uitdrukking

$$\frac{\Delta S}{S_k} = 0{,}7 \cdot (\log(N_g))^2 - 17{,}4 \cdot \log(N_g) + 100 \qquad \text{(B.9)}$$

Bij vermoeiing wordt bij een bepaald spanningsniveau het aantal wisselingen op dit spanningsniveau bepaald en vervolgens wordt dit vergeleken met het aantal toelaatbare wisselingen op dat spanningsniveau. Door dit voor de voorkomende spanningsniveaus te doen is de weerstand tegen vermoeiing te controleren.

In de ROK van RWS is bovenstaande verdeling gediscretiseerd tot onderstaande tabel:

Tabel 5-1: Aantal wisselingen per windbelasting (referentieperiode 50 jaar)

ΔS / S_k (%)	n
100	1
98	1
90	8
75	90
61	900
48	9000
36	90000
25	900000
16	9000000
9	90000000

Van beton en wapeningsstaal is bekend hoeveel wisselingen bij een bepaald spanningsniveau toelaatbaar zijn. S_K is de spanning met een herhalingstijd van 50 jaar (de spanning waarop de constructie ontworpen is).

Met bovenstaande gegevens is te bepalen welke maximale spanning t.g.v. wind eens in de 50 jaar toelaatbaar is opdat de constructie ook voldoende weerstand tegen vermoeiing heeft.

Wapening
De totale schade van de belastingen dient volgens de beschadigingsregel van Miner kleiner dan 1 te zijn.
De toetsingsprocedure per wisseling conform NEN-EN 1992-1-1:2005, §6.8.4:
Voor de wapening is gekeken naar de toelaatbare spanning voor:

- Rechte staven
- Staven gebogen met een doordiameter 2,5*D
- Gelaste staven

Er volgt (zie berekening hieronder) dat voor gewone rechte staven er geen beperking is, echter gebogen of gelaste staven hebben de volgende spanningsbeperking

Buigdoorn 2,5ø → 244 N/mm^2
Buigdoorn 5ø → 283 N/mm^2
Gelaste staven → 317 N/mm^2

Omdat bij de toetsing van vermoeiing een ULS toestand met veiligheid 1,0 wordt getoetst, is de spanning altijd minimaal een factor van ca. 1,3 lager dan de normale ULS toestanden.

Bij een toelaatbare spanning van 435 N/mm^2 in ULS volgt bij toetsing op vermoeiing een spanning van maximaal 335 N/mm^2. De toelaatbare spanningen bij vermoeiing zijn nog iets lager. Hier dient in de detaillering rekening mee gehouden te worden. Een toetsing achteraf zal volstaan.

Rechte staven

maximale gebruiksspanning			435	
Toelaatbare spanningswisseling bij N* wisselingen			162,5	
		k1	5	
		k2	9	
		N*	1,00E+06	
	ROK	Wisseling spanning	Toelaatbaar aantal	
aantal wisselingen	dS/S	wapening	wisselingen	Schade
[-]	[-]	[N/mm2]	[-]	[-]
1	100	435	7275	0,000137
1	98	426	8048	0,000124
8	90	392	12320	0,000649
90	75	326	30656	0,002936
900	61	265	86133	0,010449
9000	48	209	285505	0,031523
90000	36	157	1394937	0,064519
900000	25	109	37137862	0,024234
9000000	16	70	2061565470	0,004366
90000000	9	39	365674259232	0,000246
			Totale schade	**0,139183665**

Staven gebogen met doorndiameter 2,5*D

maximale gebruiksspanning			244	
Toelaatbare spanningswisseling bij N* wisselingen			67,4	
		k1	5	
		k2	9	
		N*	1,00E+06	

aantal wisselingen [-]	ROK dS/S [-]	Wisseling spanning wapening [N/mm2]	Toelaatbaar aantal wisselingen [-]	Schade [-]
1	100	244	1613	0,000620
1	98	239	1784	0,000560
8	90	220	2731	0,002929
90	75	183	6796	0,013243
900	61	149	19095	0,047134
9000	48	117	63292	0,142197
90000	36	88	266714	0,337440
900000	25	61	2466861	0,364836
9000000	16	39	136938283	0,065723
90000000	9	22	24289699180	0,003705
			Totale schade	**0,978388484**

Staven gebogen met doorndiameter 5*D

maximale gebruiksspanning			283	
Toelaatbare spanningswisseling bij N* wisselingen			78,0	
		k1	5	
		k2	9	
		N*	1,00E+06	

aantal wisselingen [-]	ROK dS/S [-]	Wisseling spanning wapening [N/mm2]	Toelaatbaar aantal wisselingen [-]	Schade [-]
1	100	283	1591	0,000629
1	98	277	1760	0,000568
8	90	255	2694	0,002970
90	75	212	6702	0,013428
900	61	173	18832	0,047792
9000	48	136	62422	0,144181
90000	36	102	263044	0,342148
900000	25	71	2406099	0,374050
9000000	16	45	133565305	0,067383
90000000	9	25	23691410595	0,003799
			Totale schade	**0,996946687**

Gelaste staven

maximale gebruiksspanning			317	
Toelaatbare spanningswisseling bij N* wisselingen			58,5	
		k1	3	
		k2	5	
		N*	1,00E+07	

aantal wisselingen [-]	ROK dS/S [-]	Wisseling spanning wapening [N/mm2]	Toelaatbaar aantal wisselingen [-]	Schade [-]
1	100	317	62848	0,000016
1	98	311	66775	0,000015
8	90	285	86211	0,000093
90	75	238	148972	0,000604
900	61	193	276886	0,003250
9000	48	152	568285	0,015837
90000	36	114	1347046	0,066813
900000	25	79	4022257	0,223755
9000000	16	51	20411885	0,440920
90000000	9	29	362468668	0,248297
			Totale schade	**0,999600179**

3.4. BEREKENING FUNDERING

De poer is ingevoerd in een SCIA engineer model.

Er zijn 2 modellen gedraaid:

Model 1: Lage gescheurde E modulus
Model 2: Matige gescheurde E modulus

4. VERBINDING MAST-FUNDERING

De masten worden verbonden met de fundering d.m.v. een ingestorte ankerkooi. Een ankerkooi is hieronder weergegeven

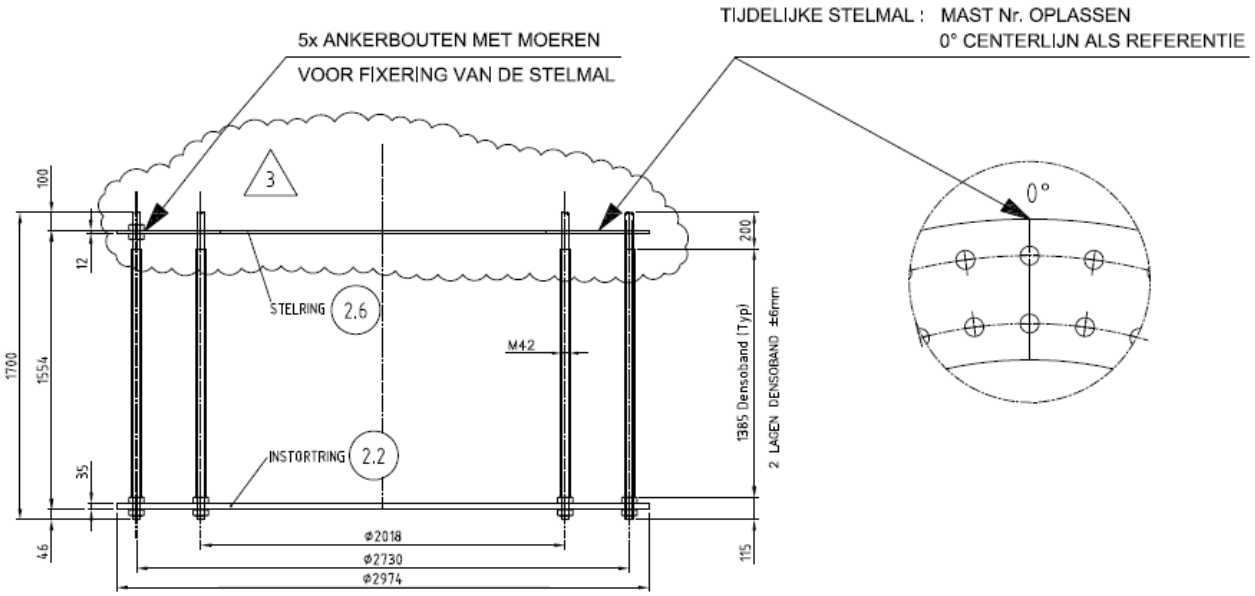

DETAIL VERANKERING

NOTA : ALLE RESTERENDE MOEREN EN ONDERLEGRINGEN WORDEN LOS MEEGELEVERD

Prepared by: LV Revision: 3 Date: 5-7-2011	Material: – Quantity: 2 Equipm. no.: W4E350	**VDL KTI**	Project No.: 36002 Workprep. No.: Pos. No.: ANKERKOOI

De ankers en platen zijn berekend door Volker Infra Design bij het ontwerp van de masten. De ankerkooi bevindt zich in de ronde opstort. De ronde opstort is d.m.v. stekken verbonden met de kruisvormige balken. De stekken worden in de UO fase berekend.

5. BIJLAGEN

Bijlage 1 Uitvoer SCIA Engineer – lage E-waarde (model 1)

Bijlage 2 Uitvoer SCIA Engineer – matige E-waarde (model 2)

BIJLAGE 1 UITVOER SCIA ENGINEER – LAGE E-WAARDE (MODEL 1)

1. Inhoudsopgave

1. Inhoudsopgave	1
2. Overzicht	2
3. Materialen	2
4. Doorsneden	2
5. Knoop	3
6. 1D-staaf	3
7. 2D-element	3
8. Subregio	3
9. Knoopondersteuningen	4
10. Lijnondersteuning op staaf	4
11. Belastingsgevallen	7
11.1. Belastingsgevallen - BG1	7
11.1.1. Belasting grafisch	7
11.2. Belastingsgevallen - BG3	7
11.2.1. Vrije puntmomenten	7
11.2.2. Genereer vrije lasten	7
11.2.3. Belasting grafisch	8
11.3. Belastingsgevallen - BG2	8
11.3.1. Lasten op oppervlak	8
11.3.2. Belasting grafisch	9
11.4. Belastingsgevallen - BG4	9
11.4.1. Vrije puntmomenten	9
11.4.2. Genereer vrije lasten	9
11.4.3. Belasting grafisch	10
11.5. Belastingsgevallen - BG5	10
11.5.1. Vrije puntmomenten	10
11.5.2. Genereer vrije lasten	11
11.5.3. Belasting grafisch	11
11.6. Belastingsgevallen - BG6	12
11.6.1. Vrije puntmomenten	12
11.6.2. Genereer vrije lasten	12
11.6.3. Belasting grafisch	12
11.7. Belastingsgevallen - BG7	13
11.7.1. Lasten op oppervlak	13
11.7.2. Belasting grafisch	13
12. Combinaties	13
13. Verplaatsing van knopen SLS 1	14
14. Verplaatsing van knopen SLS 2	14
15. Reacties	14
16. 2D element - Interne krachten; mxD+	15
17. 2D element - Interne krachten; mxD-	16
18. 2D element - Interne krachten; myD+	16
19. 2D element - Interne krachten; myD-	17
20. 2D element - Interne krachten; vx	17
21. 2D element - Interne krachten; vy	18

2.Overzicht

3. Materialen

Naam	Type	Massa eenheid [kg/m³]	E-mod [MPa]	Poisson - nu	G-mod [MPa]	Thermisch uitz. [m/mK]	Karakteristieke cylinderdruksterkte fck(28) [MPa]
C30/37	Beton	2500,0	1,1000e+04	0,2	4,5833e+03	0,00	30,00
C45/55	Beton	2500,0	3,6300e+04	0,2	1,5125e+04	0,00	45,00

4. Doorsneden

Naam	CS1	
Type	Rechthoek	
Uitgebreid	450; 450	
Onderdeelmateriaal	C45/55	
Bouwwijze	Algemeen	
Knik y-y, z-z	b	b
EEM berekening	×	

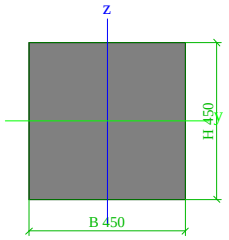

A [m²]	2,0250e-01	
A y, z [m²]	1,6875e-01	1,6875e-01
I y, z [m⁴]	3,4172e-03	3,4172e-03
I w [m⁶], t [m⁴]	0,0000e+00	5,7655e-03
Wel y, z [m³]	1,5188e-02	1,5188e-02
Wpl y, z [m³]	2,2781e-02	2,2781e-02
d y, z [mm]	0	0
c YLCS, ZLCS [mm]	225	225
alpha [deg]	0,00	
AL [m²/m]	1,8000e+00	

5. Knoop

Naam	Coördinaat X [m]	Coördinaat Y [m]	Coördinaat Z [m]
K81	0,400	-2,962	-19,000
K86	1,950	-0,762	0,000
K92	0,400	4,462	-19,000
K94	1,950	2,262	0,000
K143	-1,000	0,000	0,000
K144	0,814	0,000	0,000
K145	4,086	0,000	0,000
K146	2,450	-1,050	0,000
K147	17,214	0,000	0,000
K148	20,486	0,000	0,000
K149	18,850	-1,050	0,000
K150	22,300	0,000	0,000
K151	22,300	1,500	0,000
K152	20,486	1,500	0,000
K153	17,214	1,500	0,000
K154	18,850	2,550	0,000
K155	4,086	1,500	0,000
K156	0,814	1,500	0,000

Naam	Coördinaat X [m]	Coördinaat Y [m]	Coördinaat Z [m]
K157	2,450	2,550	0,000
K158	-1,000	1,500	0,000
K159	0,650	0,750	0,000
K160	4,100	0,000	0,000
K161	4,100	1,500	0,000
K162	4,300	0,750	0,000
K163	17,200	1,500	0,000
K164	17,200	0,000	0,000
K165	17,000	0,750	0,000
K166	20,650	0,750	0,000
K169	2,950	-0,762	0,000
K171	2,950	2,262	0,000
K175	20,900	-2,932	-19,000
K176	20,900	4,462	-19,000
K177	18,350	-0,762	0,000
K178	18,350	2,262	0,000
K179	19,350	-0,762	0,000
K180	19,350	2,262	0,000

Naam	Coördinaat X [m]	Coördinaat Y [m]	Coördinaat Z [m]
K181	21,600	-1,500	-19,000
K183	20,050	0,000	0,000
K186	20,050	1,500	0,000
K187	21,600	3,000	-19,000
K218	-0,300	-1,500	-19,000
K219	-0,300	3,000	-19,000
K220	1,250	0,000	0,000
K221	1,250	1,500	0,000
K242	1,750	0,750	0,000
K246	19,550	0,750	0,000
K252	4,500	-2,962	-19,000
K253	4,500	4,462	-19,000
K254	16,800	-2,962	-19,000
K255	16,800	4,462	-19,000
K258	10,650	0,750	-19,000
K259	10,650	0,750	0,000

6. 1D-staaf

Naam	Doorsnede	Lengte [m]	Vorm	Beginknoop	Eindknoop	Type	EEM-type	Laag
S19	CS1 - Rechthoek (450; 450)	19,190	Lijn	K86	K81	Algemeen (0)	standaard	Laag2
S24	CS1 - Rechthoek (450; 450)	19,190	Lijn	K94	K92	Algemeen (0)	standaard	Laag2
S54	CS1 - Rechthoek (450; 450)	19,186	Lijn	K179	K175	Algemeen (0)	standaard	Laag2
S55	CS1 - Rechthoek (450; 450)	19,190	Lijn	K180	K176	Algemeen (0)	standaard	Laag2
S56	CS1 - Rechthoek (450; 450)	19,122	Lijn	K183	K181	Algemeen (0)	standaard	Laag2
S59	CS1 - Rechthoek (450; 450)	19,122	Lijn	K186	K187	Algemeen (0)	standaard	Laag2
S66	CS1 - Rechthoek (450; 450)	19,122	Lijn	K220	K218	Algemeen (0)	standaard	Laag2
S67	CS1 - Rechthoek (450; 450)	19,122	Lijn	K221	K219	Algemeen (0)	standaard	Laag2
S79	CS1 - Rechthoek (450; 450)	19,190	Lijn	K169	K252	Algemeen (0)	standaard	Laag2
S80	CS1 - Rechthoek (450; 450)	19,190	Lijn	K171	K253	Algemeen (0)	standaard	Laag2
S81	CS1 - Rechthoek (450; 450)	19,190	Lijn	K177	K254	Algemeen (0)	standaard	Laag2
S82	CS1 - Rechthoek (450; 450)	19,190	Lijn	K178	K255	Algemeen (0)	standaard	Laag2
S83	CS1 - Rechthoek (450; 450)	19,000	Lijn	K259	K258	Algemeen (0)	standaard	Laag2

7. 2D-element

Naam	Materiaal	D. [mm]	Dikte type	Type	Laag
E2	C30/37	3000	konstant	vloer (90)	Laag1

8. Subregio

Naam, 2D-element, Materiaal, Dikte type	Regio3	E2	C30/37	konstant		
2D-element systeemvlak op, Exc. z [mm], D. [mm], Punt 4, Knoop, Rand, Gewicht	Boven	0		1800	K156	Cirkelboog
					K157	
					K155	Lijn

Naam, 2D-element, Materiaal, Dikte type	Regio4	E2	C30/37	konstant		
2D-element systeemvlak op, Exc. z [mm], D. [mm], Punt 4, Knoop, Rand, Gewicht	Boven	0		1800	K144	Lijn
					K145	Cirkelboog
					K146	

Naam, 2D-element, Materiaal, Dikte type	Regio6	E2	C30/37	konstant		
2D-element systeemvlak op, Exc. z [mm], D. [mm], Punt 4, Knoop, Rand, Gewicht	Boven	0		1800	K153	Cirkelboog
					K154	
					K152	Lijn

Naam, 2D-element, Materiaal, Dikte type	Regio7	E2	C30/37	konstant		
2D-element systeemvlak op, Exc. z [mm], D. [mm], Punt 4, Knoop, Rand, Gewicht	Boven	0		1800	K147	Lijn
					K148	Cirkelboog
					K149	

Naam, 2D-element, Materiaal, Dikte type	Regio8	E2	C30/37	konstant		
2D-element systeemvlak op, Exc. z [mm], D. [mm], Punt 4, Knoop, Rand, Gewicht	Onder	0		1200	K158	Lijn
					K156	Cirkelboog
					K159	
					K144	Lijn
					K143	Lijn

Naam, 2D-element, Materiaal, Dikte type	Regio9	E2	C30/37	konstant		
2D-element systeemvlak op, Exc. z [mm], D. [mm], Punt 4, Knoop, Rand, Gewicht	Onder	0		1200	K160	Cirkelboog
					K162	
					K161	Lijn
					K163	Cirkelboog

2D-element systeemvlak op, Exc. z [mm], D. [mm], Punt 4, Knoop, Rand, Gewicht	Onder	0		1200	K165 K164	 Lijn
Naam, 2D-element, Materiaal, Dikte type	Regio10	E2	C30/37	konstant		
2D-element systeemvlak op, Exc. z [mm], D. [mm], Punt 4, Knoop, Rand, Gewicht	Onder	0		1200	K152 K151 K150 K148 K166	Lijn Lijn Lijn Cirkelboog

9. Knoopondersteuningen

Naam	Knoop	Systeem	Type	X	Y	Z	Stijfheid Z [MN/m]	Rx	Ry	Rz
Sn9	K81	GCS	Standaard	Vrij	Vrij	Verend	1,2000e+02	Vrij	Vrij	Vrij
Sn14	K92	GCS	Standaard	Vrij	Vrij	Verend	1,2000e+02	Vrij	Vrij	Vrij
Sn43	K181	GCS	Standaard	Vrij	Vrij	Verend	1,2000e+02	Vrij	Vrij	Vrij
Sn47	K176	GCS	Standaard	Vrij	Vrij	Verend	1,2000e+02	Vrij	Vrij	Vrij
Sn49	K175	GCS	Standaard	Vrij	Vrij	Verend	1,2000e+02	Vrij	Vrij	Vrij
Sn50	K187	GCS	Standaard	Vrij	Vrij	Verend	1,2000e+02	Vrij	Vrij	Vrij
Sn58	K218	GCS	Standaard	Vrij	Vrij	Verend	1,2000e+02	Vrij	Vrij	Vrij
Sn59	K219	GCS	Standaard	Vrij	Vrij	Verend	1,2000e+02	Vrij	Vrij	Vrij
Sn71	K252	GCS	Standaard	Vrij	Vrij	Verend	1,2000e+02	Vrij	Vrij	Vrij
Sn72	K253	GCS	Standaard	Vrij	Vrij	Verend	1,2000e+02	Vrij	Vrij	Vrij
Sn73	K254	GCS	Standaard	Vrij	Vrij	Verend	1,2000e+02	Vrij	Vrij	Vrij
Sn74	K255	GCS	Standaard	Vrij	Vrij	Verend	1,2000e+02	Vrij	Vrij	Vrij
Sn75	K258	GCS	Standaard	Vrij	Vrij	Verend	1,2000e+02	Vrij	Vrij	Vrij

10. Lijnondersteuning op staaf

Staaf	Naam Systeem	Pos x_1 [m] Pos x_2 [m]	Coör Oors	X	Y	Stijfheid Y [MN/m²]	Z	Stijfheid Z [MN/m²]	Rx	Ry	Rz
S19	Slb14 LCS	1,100 3,500	Abso Vanaf begin	Vrij	Verend	4,5000e-01	Verend	4,5000e-01	Vrij	Vrij	Vrij
S19	Slb79 LCS	20,400 22,000	Abso Vanaf begin	Vrij	Verend	1,2450e+01	Verend	1,2450e+01	Vrij	Vrij	Vrij
S19	Slb53 LCS	9,600 10,500	Abso Vanaf begin	Vrij	Verend	1,0500e+00	Verend	1,0500e+00	Vrij	Vrij	Vrij
S19	Slb27 LCS	3,500 4,400	Abso Vanaf begin	Vrij	Verend	1,0500e+00	Verend	1,0500e+00	Vrij	Vrij	Vrij
S19	Slb66 LCS	10,500 20,400	Abso Vanaf begin	Vrij	Verend	1,0350e+01	Verend	1,0350e+01	Vrij	Vrij	Vrij
S19	Slb40 LCS	4,400 9,600	Abso Vanaf begin	Vrij	Verend	6,0000e-01	Verend	6,0000e-01	Vrij	Vrij	Vrij
S19	Slb1 LCS	0,000 1,100	Abso Vanaf begin	Vrij	Verend	1,0500e+00	Verend	1,0500e+00	Vrij	Vrij	Vrij
S24	Slb2 LCS	0,000 1,100	Abso Vanaf begin	Vrij	Verend	1,0500e+00	Verend	1,0500e+00	Vrij	Vrij	Vrij
S24	Slb41 LCS	4,400 9,600	Abso Vanaf begin	Vrij	Verend	6,0000e-01	Verend	6,0000e-01	Vrij	Vrij	Vrij
S24	Slb80 LCS	20,400 22,000	Abso Vanaf begin	Vrij	Verend	1,2450e+01	Verend	1,2450e+01	Vrij	Vrij	Vrij
S24	Slb15 LCS	1,100 3,500	Abso Vanaf begin	Vrij	Verend	4,5000e-01	Verend	4,5000e-01	Vrij	Vrij	Vrij
S24	Slb28 LCS	3,500 4,400	Abso Vanaf begin	Vrij	Verend	1,0500e+00	Verend	1,0500e+00	Vrij	Vrij	Vrij
S24	Slb54 LCS	9,600 10,500	Abso Vanaf begin	Vrij	Verend	1,0500e+00	Verend	1,0500e+00	Vrij	Vrij	Vrij
S24	Slb67 LCS	10,500 20,400	Abso Vanaf begin	Vrij	Verend	1,0350e+01	Verend	1,0350e+01	Vrij	Vrij	Vrij
S54	Slb81 LCS	20,400 22,000	Abso Vanaf begin	Vrij	Verend	1,2450e+01	Verend	1,2450e+01	Vrij	Vrij	Vrij
S54	Slb29 LCS	3,500 4,400	Abso Vanaf begin	Vrij	Verend	1,0500e+00	Verend	1,0500e+00	Vrij	Vrij	Vrij
S54	Slb68 LCS	10,500 20,400	Abso Vanaf begin	Vrij	Verend	1,0350e+01	Verend	1,0350e+01	Vrij	Vrij	Vrij
S54	Slb42 LCS	4,400 9,600	Abso Vanaf begin	Vrij	Verend	6,0000e-01	Verend	6,0000e-01	Vrij	Vrij	Vrij
S54	Slb55 LCS	9,600 10,500	Abso Vanaf begin	Vrij	Verend	1,0500e+00	Verend	1,0500e+00	Vrij	Vrij	Vrij
S54	Slb16 LCS	1,100 3,500	Abso Vanaf begin	Vrij	Verend	4,5000e-01	Verend	4,5000e-01	Vrij	Vrij	Vrij

Staaf	Naam Systeem	Pos x_1 [m] Pos x_2 [m]	Coör Oors	X	Y	Stijfheid Y [MN/m²]	Z	Stijfheid Z [MN/m²]	Rx	Ry	Rz
S54	Slb3 LCS	0,000 1,100	Abso Vanaf begin	Vrij	Verend	1,0500e+00	Verend	1,0500e+00	Vrij	Vrij	Vrij
S55	Slb43 LCS	4,400 9,600	Abso Vanaf begin	Vrij	Verend	6,0000e-01	Verend	6,0000e-01	Vrij	Vrij	Vrij
S55	Slb56 LCS	9,600 10,500	Abso Vanaf begin	Vrij	Verend	1,0500e+00	Verend	1,0500e+00	Vrij	Vrij	Vrij
S55	Slb82 LCS	20,400 22,000	Abso Vanaf begin	Vrij	Verend	1,2450e+01	Verend	1,2450e+01	Vrij	Vrij	Vrij
S55	Slb30 LCS	3,500 4,400	Abso Vanaf begin	Vrij	Verend	1,0500e+00	Verend	1,0500e+00	Vrij	Vrij	Vrij
S55	Slb17 LCS	1,100 3,500	Abso Vanaf begin	Vrij	Verend	4,5000e-01	Verend	4,5000e-01	Vrij	Vrij	Vrij
S55	Slb69 LCS	10,500 20,400	Abso Vanaf begin	Vrij	Verend	1,0350e+01	Verend	1,0350e+01	Vrij	Vrij	Vrij
S55	Slb4 LCS	0,000 1,100	Abso Vanaf begin	Vrij	Verend	1,0500e+00	Verend	1,0500e+00	Vrij	Vrij	Vrij
S56	Slb18 LCS	1,100 3,500	Abso Vanaf begin	Vrij	Verend	4,5000e-01	Verend	4,5000e-01	Vrij	Vrij	Vrij
S56	Slb70 LCS	10,500 20,400	Abso Vanaf begin	Vrij	Verend	1,0350e+01	Verend	1,0350e+01	Vrij	Vrij	Vrij
S56	Slb57 LCS	9,600 10,500	Abso Vanaf begin	Vrij	Verend	1,0500e+00	Verend	1,0500e+00	Vrij	Vrij	Vrij
S56	Slb5 LCS	0,000 1,100	Abso Vanaf begin	Vrij	Verend	1,0500e+00	Verend	1,0500e+00	Vrij	Vrij	Vrij
S56	Slb44 LCS	4,400 9,600	Abso Vanaf begin	Vrij	Verend	6,0000e-01	Verend	6,0000e-01	Vrij	Vrij	Vrij
S56	Slb83 LCS	20,400 22,000	Abso Vanaf begin	Vrij	Verend	1,2450e+01	Verend	1,2450e+01	Vrij	Vrij	Vrij
S56	Slb31 LCS	3,500 4,400	Abso Vanaf begin	Vrij	Verend	1,0500e+00	Verend	1,0500e+00	Vrij	Vrij	Vrij
S59	Slb71 LCS	10,500 20,400	Abso Vanaf begin	Vrij	Verend	1,0350e+01	Verend	1,0350e+01	Vrij	Vrij	Vrij
S59	Slb45 LCS	4,400 9,600	Abso Vanaf begin	Vrij	Verend	6,0000e-01	Verend	6,0000e-01	Vrij	Vrij	Vrij
S59	Slb58 LCS	9,600 10,500	Abso Vanaf begin	Vrij	Verend	1,0500e+00	Verend	1,0500e+00	Vrij	Vrij	Vrij
S59	Slb84 LCS	20,400 22,000	Abso Vanaf begin	Vrij	Verend	1,2450e+01	Verend	1,2450e+01	Vrij	Vrij	Vrij
S59	Slb6 LCS	0,000 1,100	Abso Vanaf begin	Vrij	Verend	1,0500e+00	Verend	1,0500e+00	Vrij	Vrij	Vrij
S59	Slb19 LCS	1,100 3,500	Abso Vanaf begin	Vrij	Verend	4,5000e-01	Verend	4,5000e-01	Vrij	Vrij	Vrij
S59	Slb32 LCS	3,500 4,400	Abso Vanaf begin	Vrij	Verend	1,0500e+00	Verend	1,0500e+00	Vrij	Vrij	Vrij
S66	Slb72 LCS	10,500 20,400	Abso Vanaf begin	Vrij	Verend	1,0350e+01	Verend	1,0350e+01	Vrij	Vrij	Vrij
S66	Slb85 LCS	20,400 22,000	Abso Vanaf begin	Vrij	Verend	1,2450e+01	Verend	1,2450e+01	Vrij	Vrij	Vrij
S66	Slb7 LCS	0,000 1,100	Abso Vanaf begin	Vrij	Verend	1,0500e+00	Verend	1,0500e+00	Vrij	Vrij	Vrij
S66	Slb20 LCS	1,100 3,500	Abso Vanaf begin	Vrij	Verend	4,5000e-01	Verend	4,5000e-01	Vrij	Vrij	Vrij
S66	Slb46 LCS	4,400 9,600	Abso Vanaf begin	Vrij	Verend	6,0000e-01	Verend	6,0000e-01	Vrij	Vrij	Vrij
S66	Slb33 LCS	3,500 4,400	Abso Vanaf begin	Vrij	Verend	1,0500e+00	Verend	1,0500e+00	Vrij	Vrij	Vrij
S66	Slb59 LCS	9,600 10,500	Abso Vanaf begin	Vrij	Verend	1,0500e+00	Verend	1,0500e+00	Vrij	Vrij	Vrij
S67	Slb21 LCS	1,100 3,500	Abso Vanaf begin	Vrij	Verend	4,5000e-01	Verend	4,5000e-01	Vrij	Vrij	Vrij
S67	Slb60 LCS	9,600 10,500	Abso Vanaf begin	Vrij	Verend	1,0500e+00	Verend	1,0500e+00	Vrij	Vrij	Vrij
S67	Slb86 LCS	20,400 22,000	Abso Vanaf begin	Vrij	Verend	1,2450e+01	Verend	1,2450e+01	Vrij	Vrij	Vrij
S67	Slb47 LCS	4,400 9,600	Abso Vanaf begin	Vrij	Verend	6,0000e-01	Verend	6,0000e-01	Vrij	Vrij	Vrij
S67	Slb8 LCS	0,000 1,100	Abso Vanaf begin	Vrij	Verend	1,0500e+00	Verend	1,0500e+00	Vrij	Vrij	Vrij
S67	Slb34 LCS	3,500 4,400	Abso Vanaf begin	Vrij	Verend	1,0500e+00	Verend	1,0500e+00	Vrij	Vrij	Vrij
S67	Slb73 LCS	10,500 20,400	Abso Vanaf begin	Vrij	Verend	1,0350e+01	Verend	1,0350e+01	Vrij	Vrij	Vrij

Staaf	Naam Systeem	Pos x_1 [m] Pos x_2 [m]	Coör Oors	X	Y	Stijfheid Y [MN/m²]	Z	Stijfheid Z [MN/m²]	Rx	Ry	Rz
S79	Slb62 LCS	9,600 10,500	Abso Vanaf begin	Vrij	Verend	1,0500e+00	Verend	1,0500e+00	Vrij	Vrij	Vrij
S79	Slb23 LCS	1,100 3,500	Abso Vanaf begin	Vrij	Verend	4,5000e-01	Verend	4,5000e-01	Vrij	Vrij	Vrij
S79	Slb88 LCS	20,400 22,000	Abso Vanaf begin	Vrij	Verend	1,2450e+01	Verend	1,2450e+01	Vrij	Vrij	Vrij
S79	Slb10 LCS	0,000 1,100	Abso Vanaf begin	Vrij	Verend	1,0500e+00	Verend	1,0500e+00	Vrij	Vrij	Vrij
S79	Slb36 LCS	3,500 4,400	Abso Vanaf begin	Vrij	Verend	1,0500e+00	Verend	1,0500e+00	Vrij	Vrij	Vrij
S79	Slb75 LCS	10,500 20,400	Abso Vanaf begin	Vrij	Verend	1,0350e+01	Verend	1,0350e+01	Vrij	Vrij	Vrij
S79	Slb49 LCS	4,400 9,600	Abso Vanaf begin	Vrij	Verend	6,0000e-01	Verend	6,0000e-01	Vrij	Vrij	Vrij
S80	Slb89 LCS	20,400 22,000	Abso Vanaf begin	Vrij	Verend	1,2450e+01	Verend	1,2450e+01	Vrij	Vrij	Vrij
S80	Slb76 LCS	10,500 20,400	Abso Vanaf begin	Vrij	Verend	1,0350e+01	Verend	1,0350e+01	Vrij	Vrij	Vrij
S80	Slb24 LCS	1,100 3,500	Abso Vanaf begin	Vrij	Verend	4,5000e-01	Verend	4,5000e-01	Vrij	Vrij	Vrij
S80	Slb37 LCS	3,500 4,400	Abso Vanaf begin	Vrij	Verend	1,0500e+00	Verend	1,0500e+00	Vrij	Vrij	Vrij
S80	Slb50 LCS	4,400 9,600	Abso Vanaf begin	Vrij	Verend	6,0000e-01	Verend	6,0000e-01	Vrij	Vrij	Vrij
S80	Slb11 LCS	0,000 1,100	Abso Vanaf begin	Vrij	Verend	1,0500e+00	Verend	1,0500e+00	Vrij	Vrij	Vrij
S80	Slb63 LCS	9,600 10,500	Abso Vanaf begin	Vrij	Verend	1,0500e+00	Verend	1,0500e+00	Vrij	Vrij	Vrij
S81	Slb38 LCS	3,500 4,400	Abso Vanaf begin	Vrij	Verend	1,0500e+00	Verend	1,0500e+00	Vrij	Vrij	Vrij
S81	Slb90 LCS	20,400 22,000	Abso Vanaf begin	Vrij	Verend	1,2450e+01	Verend	1,2450e+01	Vrij	Vrij	Vrij
S81	Slb12 LCS	0,000 1,100	Abso Vanaf begin	Vrij	Verend	1,0500e+00	Verend	1,0500e+00	Vrij	Vrij	Vrij
S81	Slb25 LCS	1,100 3,500	Abso Vanaf begin	Vrij	Verend	4,5000e-01	Verend	4,5000e-01	Vrij	Vrij	Vrij
S81	Slb77 LCS	10,500 20,400	Abso Vanaf begin	Vrij	Verend	1,0350e+01	Verend	1,0350e+01	Vrij	Vrij	Vrij
S81	Slb51 LCS	4,400 9,600	Abso Vanaf begin	Vrij	Verend	6,0000e-01	Verend	6,0000e-01	Vrij	Vrij	Vrij
S81	Slb64 LCS	9,600 10,500	Abso Vanaf begin	Vrij	Verend	1,0500e+00	Verend	1,0500e+00	Vrij	Vrij	Vrij
S82	Slb52 LCS	4,400 9,600	Abso Vanaf begin	Vrij	Verend	6,0000e-01	Verend	6,0000e-01	Vrij	Vrij	Vrij
S82	Slb91 LCS	20,400 22,000	Abso Vanaf begin	Vrij	Verend	1,2450e+01	Verend	1,2450e+01	Vrij	Vrij	Vrij
S82	Slb65 LCS	9,600 10,500	Abso Vanaf begin	Vrij	Verend	1,0500e+00	Verend	1,0500e+00	Vrij	Vrij	Vrij
S82	Slb78 LCS	10,500 20,400	Abso Vanaf begin	Vrij	Verend	1,0350e+01	Verend	1,0350e+01	Vrij	Vrij	Vrij
S82	Slb39 LCS	3,500 4,400	Abso Vanaf begin	Vrij	Verend	1,0500e+00	Verend	1,0500e+00	Vrij	Vrij	Vrij
S82	Slb13 LCS	0,000 1,100	Abso Vanaf begin	Vrij	Verend	1,0500e+00	Verend	1,0500e+00	Vrij	Vrij	Vrij
S82	Slb26 LCS	1,100 3,500	Abso Vanaf begin	Vrij	Verend	4,5000e-01	Verend	4,5000e-01	Vrij	Vrij	Vrij
S83	Slb96 LCS	9,600 10,500	Abso Vanaf begin	Vrij	Verend	1,0500e+00	Verend	1,0500e+00	Vrij	Vrij	Vrij
S83	Slb97 LCS	10,500 20,400	Abso Vanaf begin	Vrij	Verend	1,0350e+01	Verend	1,0350e+01	Vrij	Vrij	Vrij
S83	Slb98 LCS	20,400 22,000	Abso Vanaf begin	Vrij	Verend	1,2450e+01	Verend	1,2450e+01	Vrij	Vrij	Vrij
S83	Slb95 LCS	4,400 9,600	Abso Vanaf begin	Vrij	Verend	6,0000e-01	Verend	6,0000e-01	Vrij	Vrij	Vrij
S83	Slb92 LCS	0,000 1,100	Abso Vanaf begin	Vrij	Verend	1,0500e+00	Verend	1,0500e+00	Vrij	Vrij	Vrij
S83	Slb93 LCS	1,100 3,500	Abso Vanaf begin	Vrij	Verend	4,5000e-01	Verend	4,5000e-01	Vrij	Vrij	Vrij
S83	Slb94 LCS	3,500 4,400	Abso Vanaf begin	Vrij	Verend	1,0500e+00	Verend	1,0500e+00	Vrij	Vrij	Vrij

11. Belastingsgevallen

11.1. Belastingsgevallen - BG1

Naam	Omschrijving	Actie type	Lastgroep	Belastingtype	Richting
BG1	Eigengewicht	Permanent	LG8	Eigen gewicht	-Z

11.1.1. Belasting grafisch

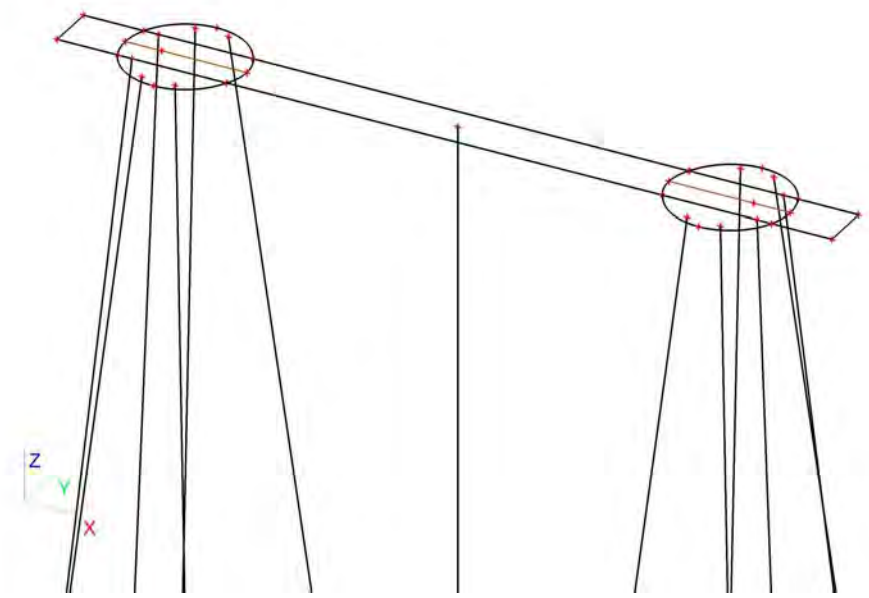

11.2. Belastingsgevallen - BG3

Naam	Omschrijving	Actie type	Lastgroep	Belastingtype	Spec	Duur	'Master' belastingsgeval
BG3	ULS 1	Variabel	LG7	Statisch	Standaard	Kort	Geen

11.2.1. Vrije puntmomenten

Typenaam	Naam	Rich	Type	Geldigheid	Selecteer	Waarde - F [kNm]	Belastingsgeval	Coördinaat X [m]	Coördinaat Y [m]	Coördinaat Z [m]	Coördinaat ux [m]	Coördinaat uy [m]	Coördinaat uz [m]	Systeem
Vrij puntmoment	FM1	Mx	Moment	Alle	Auto	0,00	BG3 - ULS 1	2,450	0,750	0,000	2,450	0,750	0,000	GCS
Vrij puntmoment	FM2	Mx	Moment	Alle	Auto	0,00	BG3 - ULS 1	18,850	0,750	0,000	18,850	0,750	0,000	GCS
Vrij puntmoment	FM3	My	Moment	Alle	Auto	14507,00	BG3 - ULS 1	2,450	0,750	0,000	2,450	0,750	0,000	GCS
Vrij puntmoment	FM4	My	Moment	Alle	Auto	14507,00	BG3 - ULS 1	18,850	0,750	0,000	18,850	0,750	0,000	GCS
Vrij puntmoment	FM5	Mx	Moment	Alle	Auto	0,00	BG3 - ULS 1	2,450	0,750	0,000	2,450	0,750	0,000	GCS
Vrij puntmoment	FM6	Mx	Moment	Alle	Auto	0,00	BG3 - ULS 1	18,850	0,750	0,000	18,850	0,750	0,000	GCS
Vrij puntmoment	FM7	My	Moment	Alle	Auto	953,70	BG3 - ULS 1	2,450	0,750	0,000	-13,960	0,757	0,000	GCS
Vrij puntmoment	FM8	My	Moment	Alle	Auto	953,70	BG3 - ULS 1	18,850	0,750	0,000	2,440	0,757	0,000	GCS

11.2.2. Genereer vrije lasten

Naam	Belastingsgeval	2D-element	Rich	Belastingstype Type	Oorspronkelijke belasting	Waarde - F [kN] Waarde - F [kNm]	Systeem Locatie
GFF1	BG3 - ULS 1	E2	Z	Punt Kracht	FF1	-565,00	GCS Lengte
GFF4	BG3 - ULS 1	E2	Z	Punt Kracht	FF2	-565,00	GCS Lengte
GFF5	BG3 - ULS 1	E2	Mx	Punt Moment	FM6	0,00	GCS Lengte
GFF6	BG3 - ULS 1	E2	Y	Punt Kracht	FF3	0,00	GCS Lengte
GFF7	BG3 - ULS 1	E2	X	Punt Kracht	FF5	374,00	GCS Lengte

Naam	Belastingsgeval	2D-element	Rich	Belastingstype Type	Oorspronkelijke belasting	Waarde - F [kN] Waarde - F [kNm]	Systeem Locatie
GFF9	BG3 - ULS 1	E2	Y	Punt Kracht	FF4	0,00	GCS Lengte
GFF10	BG3 - ULS 1	E2	X	Punt Kracht	FF6	374,00	GCS Lengte
GFF25	BG3 - ULS 1	E2	My	Punt Moment	FM7	953,70	GCS Lengte
GFF27	BG3 - ULS 1	E2	My	Punt Moment	FM8	953,70	GCS Lengte
GFF41	BG3 - ULS 1	E2	Mx	Punt Moment	FM1	0,00	GCS Lengte
GFF42	BG3 - ULS 1	E2	Mx	Punt Moment	FM2	0,00	GCS Lengte
GFF43	BG3 - ULS 1	E2	My	Punt Moment	FM3	14507,00	GCS Lengte
GFF44	BG3 - ULS 1	E2	My	Punt Moment	FM4	14507,00	GCS Lengte
GFF45	BG3 - ULS 1	E2	Mx	Punt Moment	FM5	0,00	GCS Lengte

11.2.3. Belasting grafisch

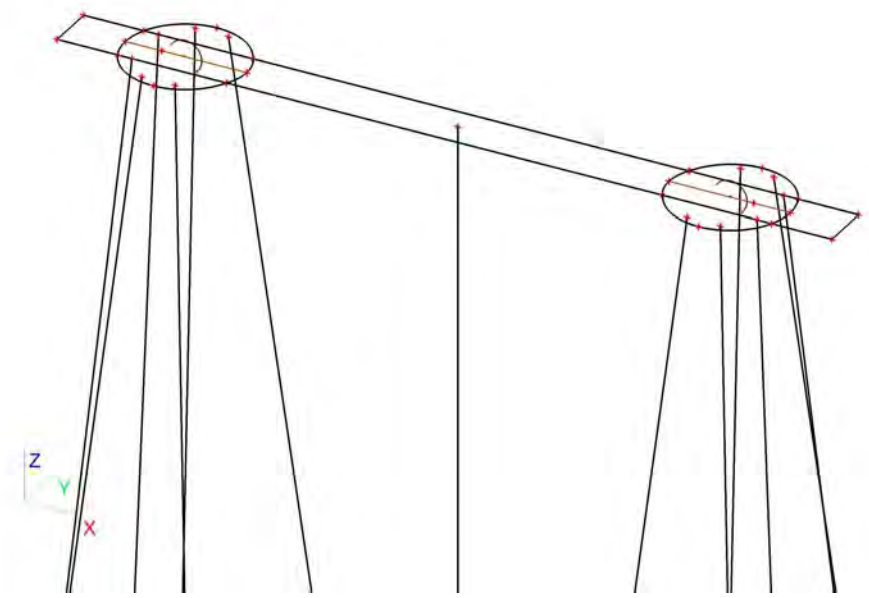

11.3. Belastingsgevallen - BG2

Naam	Omschrijving	Actie type	Lastgroep	Belastingtype
BG2	Grond	Permanent	LG8	Standaard

11.3.1. Lasten op oppervlak

Naam	Rich	Type	Waarde [kN/m²]	Belastingsgeval	Systeem	Loc
SF1	Z	Kracht	-25,50	BG2 - Grond	LCS	Lengte
SF2	Z	Kracht	-25,50	BG2 - Grond	LCS	Lengte
SF3	Z	Kracht	-25,50	BG2 - Grond	LCS	Lengte

11.3.2. Belasting grafisch

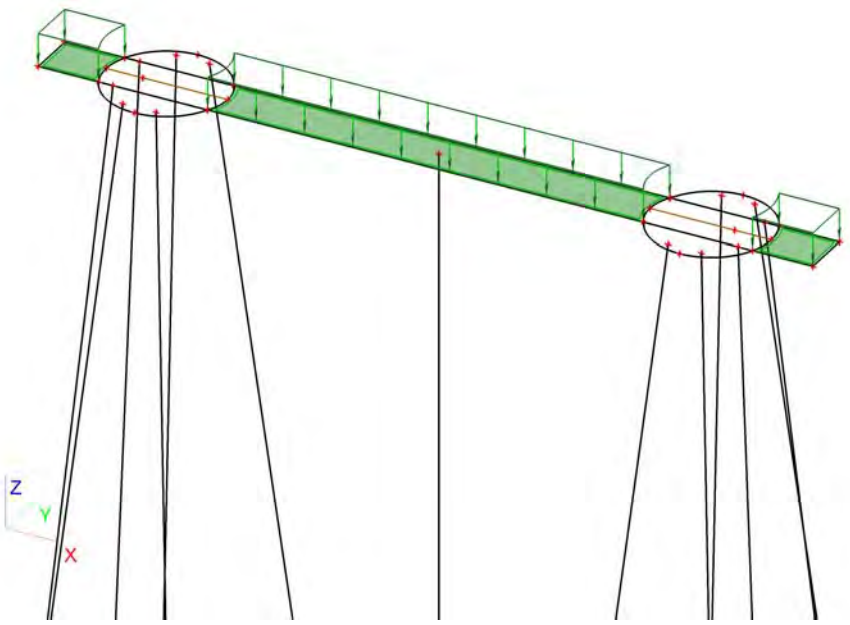

11.4. Belastingsgevallen - BG4

Naam	Omschrijving	Actie type	Lastgroep	Belastingtype	Spec	Duur	'Master' belastingsgeval
BG4	ULS 2	Variabel	LG9	Statisch	Standaard	Kort	Geen

11.4.1. Vrije puntmomenten

Typenaam	Naam	Rich	Type	Geldigheid	Selecteer	Waarde - F [kNm]	Belastingsgeval	Coördinaat X [m]	Coördinaat Y [m]	Coördinaat Z [m]	Coördinaat ux [m]	Coördinaat uy [m]	Coördinaat uz [m]	Systeem
Vrij puntmoment	FM9	Mx	Moment	Alle	Auto	-4914,00	BG4 - ULS 2	2,450	0,750	0,000	3,703	0,750	0,000	GCS
Vrij puntmoment	FM10	Mx	Moment	Alle	Auto	-4914,00	BG4 - ULS 2	18,850	0,750	0,000	20,275	0,744	0,000	GCS
Vrij puntmoment	FM11	My	Moment	Alle	Auto	862,00	BG4 - ULS 2	2,450	0,750	0,000	-12,525	0,744	0,000	GCS
Vrij puntmoment	FM12	My	Moment	Alle	Auto	862,00	BG4 - ULS 2	18,850	0,750	0,000	3,703	0,750	0,000	GCS
Vrij puntmoment	FM13	Mx	Moment	Alle	Auto	397,80	BG4 - ULS 2	2,450	0,750	0,000	-13,950	0,750	0,000	GCS
Vrij puntmoment	FM14	Mx	Moment	Alle	Auto	397,80	BG4 - ULS 2	18,850	0,750	0,000	2,450	0,750	0,000	GCS
Vrij puntmoment	FM15	My	Moment	Alle	Auto	0,00	BG4 - ULS 2	2,450	0,750	0,000	-13,950	0,750	0,000	GCS
Vrij puntmoment	FM16	My	Moment	Alle	Auto	0,00	BG4 - ULS 2	18,850	0,750	0,000	2,450	0,750	0,000	GCS

11.4.2. Genereer vrije lasten

Naam	Belastingsgeval	2D-element	Rich	Belastingstype Type	Oorspronkelijke belasting	Waarde - F [kN] Waarde - F [kNm]	Systeem Locatie
GFF2	BG4 - ULS 2	E2	Y	Punt Kracht	FF9	156,00	GCS Lengte
GFF12	BG4 - ULS 2	E2	Z	Punt Kracht	FF7	-737,00	GCS Lengte
GFF13	BG4 - ULS 2	E2	Mx	Punt Moment	FM13	397,80	GCS Lengte
GFF14	BG4 - ULS 2	E2	Z	Punt Kracht	FF8	-737,00	GCS Lengte
GFF15	BG4 - ULS 2	E2	Mx	Punt Moment	FM14	397,80	GCS Lengte
GFF16	BG4 - ULS 2	E2	Y	Punt Kracht	FF10	156,00	GCS Lengte
GFF18	BG4 - ULS 2	E2	X	Punt Kracht	FF11	0,00	GCS Lengte
GFF19	BG4 - ULS 2	E2	X	Punt Kracht	FF12	0,00	GCS Lengte
GFF20	BG4 - ULS 2	E2	Mx	Punt Moment	FM10	-4914,00	GCS Lengte

Naam	Belastingsgeval	2D-element	Rich	Belastingstype Type	Oorspronkelijke belasting	Waarde - F [kN] Waarde - F [kNm]	Systeem Locatie
GFF22	BG4 - ULS 2	E2	My	Punt Moment	FM15	0,00	GCS Lengte
GFF24	BG4 - ULS 2	E2	My	Punt Moment	FM16	0,00	GCS Lengte
GFF29	BG4 - ULS 2	E2	My	Punt Moment	FM11	862,00	GCS Lengte
GFF31	BG4 - ULS 2	E2	My	Punt Moment	FM12	862,00	GCS Lengte
GFF46	BG4 - ULS 2	E2	Mx	Punt Moment	FM9	-4914,00	GCS Lengte

11.4.3. Belasting grafisch

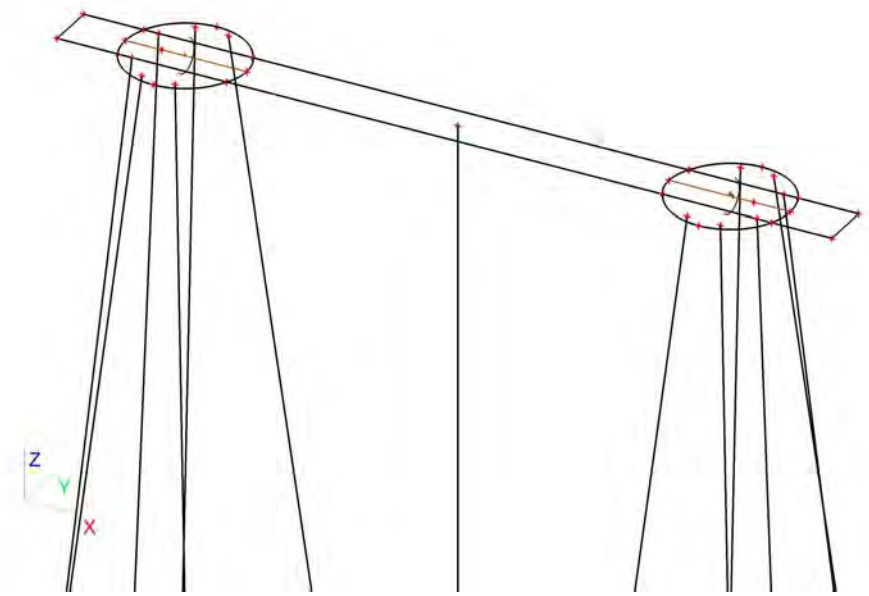

11.5. Belastingsgevallen - BG5

Naam	Omschrijving	Actie type	Lastgroep	Belastingtype	Spec	Duur	'Master' belastingsgeval
BG5	SLS 1	Variabel	LG9	Statisch	Standaard	Kort	Geen

11.5.1. Vrije puntmomenten

Typenaam	Naam	Rich	Type	Geldigheid	Selecteer	Waarde - F [kNm]	Belastingsgeval	Coördinaat X [m]	Coördinaat Y [m]	Coördinaat Z [m]	Coördinaat ux [m]	Coördinaat uy [m]	Coördinaat uz [m]	Systeem
Vrij puntmoment	FM17	Mx	Moment	Alle	Auto	-1805,00	BG5 - SLS 1	2,450	0,750	0,000	1,450	0,750	0,000	GCS
Vrij puntmoment	FM18	Mx	Moment	Alle	Auto	-1805,00	BG5 - SLS 1	18,850	0,750	0,000	17,850	0,750	0,000	GCS
Vrij puntmoment	FM19	My	Moment	Alle	Auto	10053,00	BG5 - SLS 1	2,450	0,750	0,000	1,450	0,750	0,000	GCS
Vrij puntmoment	FM20	My	Moment	Alle	Auto	10053,00	BG5 - SLS 1	18,850	0,750	0,000	17,850	0,750	0,000	GCS
Vrij puntmoment	FM21	Mx	Moment	Alle	Auto	165,75	BG5 - SLS 1	2,450	0,750	0,000	1,450	0,750	0,000	GCS
Vrij puntmoment	FM22	Mx	Moment	Alle	Auto	165,75	BG5 - SLS 1	18,850	0,750	0,000	17,850	0,750	0,000	GCS
Vrij puntmoment	FM23	My	Moment	Alle	Auto	165,75	BG5 - SLS 1	2,450	0,750	0,000	1,450	0,750	0,000	GCS
Vrij puntmoment	FM24	My	Moment	Alle	Auto	165,75	BG5 - SLS 1	18,850	0,750	0,000	17,850	0,750	0,000	GCS
Vrij puntmoment	FM29	Mx	Moment	Alle	Auto	459,00	BG5 - SLS 1	2,450	0,750	0,000	1,450	0,750	0,000	GCS
Vrij puntmoment	FM30	Mx	Moment	Alle	Auto	459,00	BG5 - SLS 1	18,850	0,750	0,000	17,850	0,750	0,000	GCS
Vrij puntmoment	FM31	My	Moment	Alle	Auto	400,35	BG5 - SLS 1	2,450	0,750	0,000	-14,960	0,757	0,000	GCS
Vrij puntmoment	FM32	My	Moment	Alle	Auto	400,35	BG5 - SLS 1	18,850	0,750	0,000	1,440	0,757	0,000	GCS

11.5.2. Genereer vrije lasten

Naam	Belastingsgeval	2D-element	Rich	Belastingstype Type	Oorspronkelijke belasting	Waarde - F [kN] Waarde - F [kNm]	Systeem Locatie
GFF3	BG5 - SLS 1	E2	My	Punt Moment	FM19	10053,00	GCS Lengte
GFF8	BG5 - SLS 1	E2	Mx	Punt Moment	FM17	-1805,00	GCS Lengte
GFF11	BG5 - SLS 1	E2	Mx	Punt Moment	FM18	-1805,00	GCS Lengte
GFF17	BG5 - SLS 1	E2	My	Punt Moment	FM20	10053,00	GCS Lengte
GFF21	BG5 - SLS 1	E2	Z	Punt Kracht	FF13	-471,00	GCS Lengte
GFF23	BG5 - SLS 1	E2	Z	Punt Kracht	FF14	-471,00	GCS Lengte
GFF26	BG5 - SLS 1	E2	Y	Punt Kracht	FF15	65,00	GCS Lengte
GFF28	BG5 - SLS 1	E2	Y	Punt Kracht	FF16	65,00	GCS Lengte
GFF30	BG5 - SLS 1	E2	X	Punt Kracht	FF17	257,00	GCS Lengte
GFF32	BG5 - SLS 1	E2	X	Punt Kracht	FF18	257,00	GCS Lengte
GFF38	BG5 - SLS 1	E2	Mx	Punt Moment	FM29	459,00	GCS Lengte
GFF40	BG5 - SLS 1	E2	Mx	Punt Moment	FM30	459,00	GCS Lengte
GFF47	BG5 - SLS 1	E2	Mx	Punt Moment	FM21	165,75	GCS Lengte
GFF48	BG5 - SLS 1	E2	Mx	Punt Moment	FM22	165,75	GCS Lengte
GFF49	BG5 - SLS 1	E2	My	Punt Moment	FM23	165,75	GCS Lengte
GFF50	BG5 - SLS 1	E2	My	Punt Moment	FM24	165,75	GCS Lengte
GFF55	BG5 - SLS 1	E2	My	Punt Moment	FM31	400,35	GCS Lengte
GFF56	BG5 - SLS 1	E2	My	Punt Moment	FM32	400,35	GCS Lengte

11.5.3. Belasting grafisch

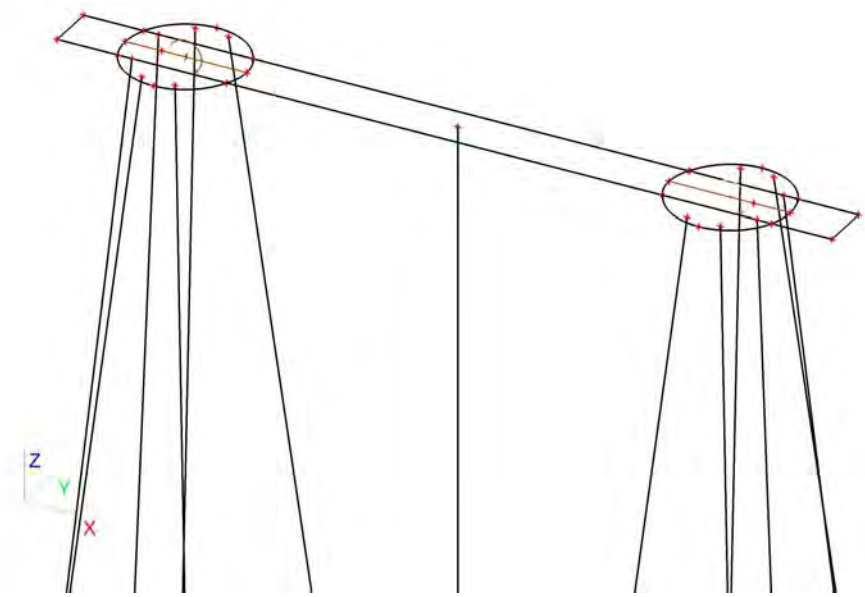

11.6. Belastingsgevallen - BG6

Naam	Omschrijving	Actie type	Lastgroep	Belastingtype	Spec	Duur	'Master' belastingsgeval
BG6	SLS 2	Variabel	LG9	Statisch	Standaard	Kort	Geen

11.6.1. Vrije puntmomenten

Typenaam	Naam	Rich	Type	Geldigheid	Selecteer	Waarde - F [kNm]	Belastingsgeval	Coördinaat X [m]	Coördinaat Y [m]	Coördinaat Z [m]	Coördinaat ux [m]	Coördinaat uy [m]	Coördinaat uz [m]	Systeem
Vrij puntmoment	FM25	Mx	Moment	Alle	Auto	-5585,00	BG6 - SLS 2	2,450	0,750	0,000	1,450	0,750	0,000	GCS
Vrij puntmoment	FM26	Mx	Moment	Alle	Auto	-5585,00	BG6 - SLS 2	18,850	0,750	0,000	17,850	0,750	0,000	GCS
Vrij puntmoment	FM27	My	Moment	Alle	Auto	6660,00	BG6 - SLS 2	2,450	0,750	0,000	1,450	0,750	0,000	GCS
Vrij puntmoment	FM28	My	Moment	Alle	Auto	6660,00	BG6 - SLS 2	18,850	0,750	0,000	17,850	0,750	0,000	GCS

11.6.2. Genereer vrije lasten

Naam	Belastingsgeval	2D-element	Rich	Belastingstype Type	Oorspronkelijke belasting	Waarde - F [kN] Waarde - F [kNm]	Systeem Locatie
GFF33	BG6 - SLS 2	E2	Z	Punt Kracht	FF19	-592,00	GCS Lengte
GFF34	BG6 - SLS 2	E2	Z	Punt Kracht	FF20	-592,00	GCS Lengte
GFF35	BG6 - SLS 2	E2	Y	Punt Kracht	FF21	180,00	GCS Lengte
GFF36	BG6 - SLS 2	E2	Y	Punt Kracht	FF22	180,00	GCS Lengte
GFF37	BG6 - SLS 2	E2	X	Punt Kracht	FF23	157,00	GCS Lengte
GFF39	BG6 - SLS 2	E2	X	Punt Kracht	FF24	157,00	GCS Lengte
GFF51	BG6 - SLS 2	E2	Mx	Punt Moment	FM25	-5585,00	GCS Lengte
GFF52	BG6 - SLS 2	E2	Mx	Punt Moment	FM26	-5585,00	GCS Lengte
GFF53	BG6 - SLS 2	E2	My	Punt Moment	FM27	6660,00	GCS Lengte
GFF54	BG6 - SLS 2	E2	My	Punt Moment	FM28	6660,00	GCS Lengte

11.6.3. Belasting grafisch

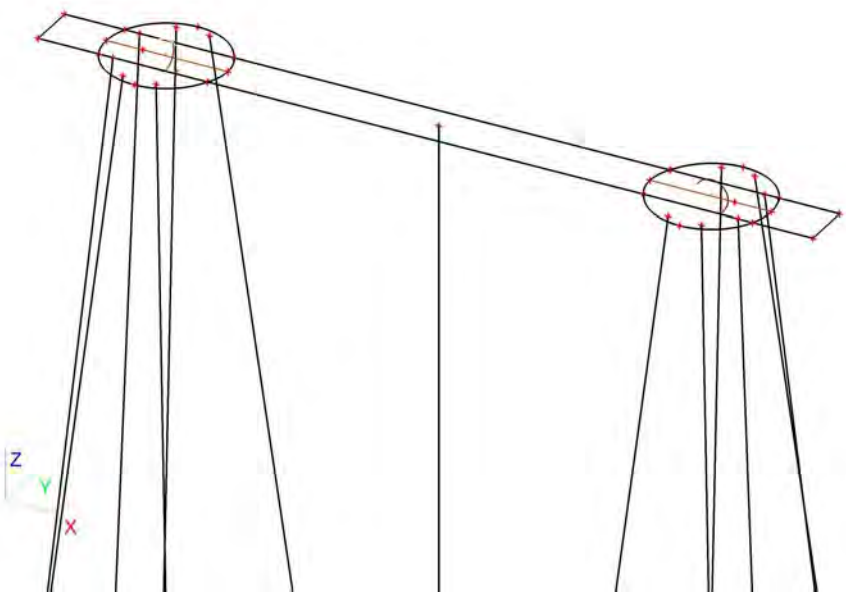

11.7. Belastingsgevallen - BG7

Naam	Omschrijving	Actie type	Lastgroep	Belastingtype	Spec	Duur	'Master' belastingsgeval
BG7	Belasting op maaiveld	Variabel	LG7	Statisch	Standaard	Kort	Geen

11.7.1. Lasten op oppervlak

Naam	Rich	Type	Waarde [kN/m²]	Belastingsgeval	Systeem	Loc
SF4	Z	Kracht	-10,00	BG7 - Belasting op maaiveld	LCS	Lengte
SF5	Z	Kracht	-10,00	BG7 - Belasting op maaiveld	LCS	Lengte
SF6	Z	Kracht	-10,00	BG7 - Belasting op maaiveld	LCS	Lengte

11.7.2. Belasting grafisch

[redacted]

12. Combinaties

Naam	Type	Belastingsgevallen	Coëff. [-]
Combi1	Omhullende - uiterst	BG1 - Eigengewicht	1,30
		BG3 - ULS 1	1,00
		BG7 - Belasting op maaiveld	1,16
		BG2 - Grond	1,30
Combi2	Omhullende - uiterst	BG1 - Eigengewicht	1,30
		BG4 - ULS 2	1,00
		BG7 - Belasting op maaiveld	1,16
		BG2 - Grond	1,30
Combi3	Omhullende - uiterst	BG1 - Eigengewicht	1,30
		BG3 - ULS 1	0,60
		BG7 - Belasting op maaiveld	1,65
		BG2 - Grond	1,30
Combi4	Omhullende - uiterst	BG1 - Eigengewicht	1,30
		BG4 - ULS 2	0,60
		BG7 - Belasting op maaiveld	1,65
		BG2 - Grond	1,30
Combi5	Omhullende - uiterst	BG1 - Eigengewicht	0,54
		BG3 - ULS 1	1,00
		BG2 - Grond	0,54
Combi6	Omhullende -	BG1 - Eigengewicht	0,54

Naam	Type	Belastingsgevallen	Coëff. [-]
Combi6	Omhullende - sterkte	BG4 - ULS 2	1,00
		BG2 - Grond	0,54
Combi7	Omhullende - bruikbaarheid	BG1 - Eigengewicht	1,00
		BG5 - SLS 1	1,00
		BG7 - Belasting op maaiveld	1,16
		BG2 - Grond	1,00
Combi8	Omhullende - bruikbaarheid	BG1 - Eigengewicht	1,00
		BG6 - SLS 2	1,00
		BG7 - Belasting op maaiveld	0,70
		BG2 - Grond	1,00
Combi9	Omhullende - bruikbaarheid	BG1 - Eigengewicht	1,00
		BG5 - SLS 1	0,60
		BG7 - Belasting op maaiveld	1,00
		BG2 - Grond	1,00
Combi10	Omhullende - bruikbaarheid	BG1 - Eigengewicht	1,00
		BG6 - SLS 2	0,60
		BG7 - Belasting op maaiveld	1,00
		BG2 - Grond	1,00
Combi11	Omhullende - bruikbaarheid	BG1 - Eigengewicht	0,60
		BG5 - SLS 1	1,00
		BG2 - Grond	0,60
Combi12	Omhullende - bruikbaarheid	BG1 - Eigengewicht	0,60
		BG6 - SLS 2	1,00
		BG2 - Grond	0,60

13. Verplaatsing van knopen SLS 1

Lineaire berekening, Extreem : Globaal
Selectie : Alle
Belastingsgevallen : BG5

BG	Snede	elem	dx [m]	Ux [mm]	Uy [mm]	Uz [mm]	Fix [mrad]	Fiy [mrad]	Fiz [mrad]
BG5	Snede3	155	3,650	**13,9**	2,0	-9,0	-1,0	4,7	**0,4**
BG5	Snede2	18	2,750	**13,9**	2,0	-5,6	-1,0	4,7	-0,4
BG5	Snede3	126	2,250	13,9	**2,0**	-2,5	-1,0	4,8	0,4
BG5	Snede2	77	3,626	13,9	**2,0**	**-9,6**	-1,0	4,5	-0,4
BG5	Snede3	174	0,000	13,9	2,0	**7,8**	-1,0	**4,4**	0,4
BG5	Snede2	14	1,750	13,9	2,0	-1,0	**-1,0**	**5,0**	-0,4
BG5	Snede2	57	0,000	13,9	2,0	7,4	**-1,0**	4,8	**-0,5**

14. Verplaatsing van knopen SLS 2

Lineaire berekening, Extreem : Globaal
Selectie : Alle
Belastingsgevallen : BG6

BG	Snede	elem	dx [m]	Ux [mm]	Uy [mm]	Uz [mm]	Fix [mrad]	Fiy [mrad]	Fiz [mrad]
BG6	Snede3	155	3,650	**8,5**	5,1	-6,2	-4,7	2,9	**2,8**
BG6	Snede2	18	2,750	**8,6**	5,1	-4,1	-4,8	2,9	-2,5
BG6	Snede2	90	1,500	8,6	**5,1**	-0,4	-4,8	3,1	-2,6
BG6	Snede3	174	0,000	8,5	**5,1**	**4,3**	-4,8	**2,8**	2,3
BG6	Snede2	77	3,626	8,6	5,1	**-6,6**	-4,8	2,8	-2,3
BG6	Snede2	14	1,750	8,6	5,1	-1,2	**-5,0**	**3,2**	-2,6
BG6	Snede2	57	0,000	8,6	5,1	4,1	**-4,7**	3,0	**-2,8**

15. Reacties

Lineaire berekening, Extreem : Globaal
Selectie : Alle
Klasse : UGT

Steunpunt	BG	dx [m]	Rx [kN]	Ry [kN]	Rz [kN]	Mx [kNm]	My [kNm]	Mz [kNm]
Slb70/S56	Combi1/1	18,164	**-46,28**	44,54	-7,29	0,00	0,00	0,00
Slb78/S82	Combi2/2	18,224	**42,16**	-59,92	-10,38	0,00	0,00	0,00
Slb76/S80	Combi2/2	18,224	-43,61	**-61,95**	-10,73	0,00	0,00	0,00
Slb75/S79	Combi1/1	18,224	-39,34	**55,41**	-9,63	0,00	0,00	0,00
Sn58/K218	Combi5/3		-20,66	-20,06	**-609,06**	0,00	0,00	0,00
Sn43/K181	Combi1/1		-39,47	38,18	**1172,73**	0,00	0,00	0,00
Sn47/K176	Combi6/4		-26,62	-37,63	787,55	**0,00**	0,00	0,00
Sn59/K219	Combi1/5		-15,40	15,00	-450,20	**0,00**	0,00	0,00

Steunpunt	BG	dx [m]	Rx [kN]	Ry [kN]	Rz [kN]	Mx [kNm]	My [kNm]	Mz [kNm]
Sn50/K187	Combi1/1		-39,46	-38,17	1172,50	0,00	**0,00**	0,00
Sn47/K176	Combi1/5		-26,63	-37,77	791,36	0,00	**0,00**	0,00
Sn72/K253	Combi5/3		-24,34	-34,64	722,02	0,00	0,00	**0,00**
Sn9/K81	Combi5/3		-5,52	-7,92	-161,29	0,00	0,00	**0,00**

BIJLAGE 2 UITVOER SCIA ENGINEER – MATIGE E-WAARDE (MODEL 2)

1. Inhoudsopgave

1. Inhoudsopgave	1
2. Overzicht	2
3. Materialen	2
4. Doorsneden	2
5. Knoop	3
6. 1D-staaf	3
7. 2D-element	3
8. Subregio	3
9. Knoopondersteuningen	4
10. Lijnondersteuning op staaf	4
11. Belastingsgevallen	7
11.1. Belastingsgevallen - BG1	7
11.1.1. Belasting grafisch	7
11.2. Belastingsgevallen - BG3	7
11.2.1. Vrije puntmomenten	7
11.2.2. Genereer vrije lasten	7
11.2.3. Belasting grafisch	8
11.3. Belastingsgevallen - BG2	8
11.3.1. Lasten op oppervlak	8
11.3.2. Belasting grafisch	9
11.4. Belastingsgevallen - BG4	9
11.4.1. Vrije puntmomenten	9
11.4.2. Genereer vrije lasten	9
11.4.3. Belasting grafisch	10
11.5. Belastingsgevallen - BG5	10
11.5.1. Vrije puntmomenten	10
11.5.2. Genereer vrije lasten	11
11.5.3. Belasting grafisch	11
11.6. Belastingsgevallen - BG6	12
11.6.1. Vrije puntmomenten	12
11.6.2. Genereer vrije lasten	12
11.6.3. Belasting grafisch	12
11.7. Belastingsgevallen - BG7	13
11.7.1. Lasten op oppervlak	13
11.7.2. Belasting grafisch	13
12. Combinaties	13
13. Verplaatsing van knopen SLS 1	14
14. Verplaatsing van knopen SLS 2	14
15. Reacties	14
16. 2D element - Interne krachten; mxD+	15
17. 2D element - Interne krachten; mxD-	15
18. 2D element - Interne krachten; myD+	16
19. 2D element - Interne krachten; myD-	16
20. 2D element - Interne krachten; vx	17
21. 2D element - Interne krachten; vy	17

2. Overzicht

3. Materialen

Naam	Type	Massa eenheid [kg/m³]	E-mod [MPa]	Poisson - nu	G-mod [MPa]	Thermisch uitz. [m/mK]	Karakteristieke cylinderdruksterkte fck(28) [MPa]
C30/37	Beton	2500,0	2,2000e+04	0,2	9,1667e+03	0,00	30,00
C45/55	Beton	2500,0	3,6300e+04	0,2	1,5125e+04	0,00	45,00

4. Doorsneden

Naam	CS1	
Type	Rechthoek	
Uitgebreid	450; 450	
Onderdeelmateriaal	C45/55	
Bouwwijze	Algemeen	
Knik y-y, z-z	b	b
EEM berekening	×	

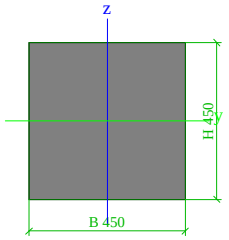

A [m²]	2,0250e-01	
A y, z [m²]	1,6875e-01	1,6875e-01
I y, z [m⁴]	3,4172e-03	3,4172e-03
I w [m⁶], t [m⁴]	0,0000e+00	5,7655e-03
Wel y, z [m³]	1,5188e-02	1,5188e-02
Wpl y, z [m³]	2,2781e-02	2,2781e-02
d y, z [mm]	0	0
c YLCS, ZLCS [mm]	225	225
alpha [deg]	0,00	
AL [m²/m]	1,8000e+00	

5. Knoop

Naam	Coördinaat X [m]	Coördinaat Y [m]	Coördinaat Z [m]
K81	0,400	-2,962	-19,000
K86	1,950	-0,762	0,000
K92	0,400	4,462	-19,000
K94	1,950	2,262	0,000
K143	-1,000	0,000	0,000
K144	0,814	0,000	0,000
K145	4,086	0,000	0,000
K146	2,450	-1,050	0,000
K147	17,214	0,000	0,000
K148	20,486	0,000	0,000
K149	18,850	-1,050	0,000
K150	22,300	0,000	0,000
K151	22,300	1,500	0,000
K152	20,486	1,500	0,000
K153	17,214	1,500	0,000
K154	18,850	2,550	0,000
K155	4,086	1,500	0,000
K156	0,814	1,500	0,000

Naam	Coördinaat X [m]	Coördinaat Y [m]	Coördinaat Z [m]
K157	2,450	2,550	0,000
K158	-1,000	1,500	0,000
K159	0,650	0,750	0,000
K160	4,100	0,000	0,000
K161	4,100	1,500	0,000
K162	4,300	0,750	0,000
K163	17,200	1,500	0,000
K164	17,200	0,000	0,000
K165	17,000	0,750	0,000
K166	20,650	0,750	0,000
K169	2,950	-0,762	0,000
K171	2,950	2,262	0,000
K175	20,900	-2,932	-19,000
K176	20,900	4,462	-19,000
K177	18,350	-0,762	0,000
K178	18,350	2,262	0,000
K179	19,350	-0,762	0,000
K180	19,350	2,262	0,000

Naam	Coördinaat X [m]	Coördinaat Y [m]	Coördinaat Z [m]
K181	21,600	-1,500	-19,000
K183	20,050	0,000	0,000
K186	20,050	1,500	0,000
K187	21,600	3,000	-19,000
K218	-0,300	-1,500	-19,000
K219	-0,300	3,000	-19,000
K220	1,250	0,000	0,000
K221	1,250	1,500	0,000
K242	1,750	0,750	0,000
K246	19,550	0,750	0,000
K252	4,500	-2,962	-19,000
K253	4,500	4,462	-19,000
K254	16,800	-2,962	-19,000
K255	16,800	4,462	-19,000
K258	10,650	0,750	-19,000
K259	10,650	0,750	0,000

6. 1D-staaf

Naam	Doorsnede	Lengte [m]	Vorm	Beginknoop	Eindknoop	Type	EEM-type	Laag
S19	CS1 - Rechthoek (450; 450)	19,190	Lijn	K86	K81	Algemeen (0)	standaard	Laag2
S24	CS1 - Rechthoek (450; 450)	19,190	Lijn	K94	K92	Algemeen (0)	standaard	Laag2
S54	CS1 - Rechthoek (450; 450)	19,186	Lijn	K179	K175	Algemeen (0)	standaard	Laag2
S55	CS1 - Rechthoek (450; 450)	19,190	Lijn	K180	K176	Algemeen (0)	standaard	Laag2
S56	CS1 - Rechthoek (450; 450)	19,122	Lijn	K183	K181	Algemeen (0)	standaard	Laag2
S59	CS1 - Rechthoek (450; 450)	19,122	Lijn	K186	K187	Algemeen (0)	standaard	Laag2
S66	CS1 - Rechthoek (450; 450)	19,122	Lijn	K220	K218	Algemeen (0)	standaard	Laag2
S67	CS1 - Rechthoek (450; 450)	19,122	Lijn	K221	K219	Algemeen (0)	standaard	Laag2
S79	CS1 - Rechthoek (450; 450)	19,190	Lijn	K169	K252	Algemeen (0)	standaard	Laag2
S80	CS1 - Rechthoek (450; 450)	19,190	Lijn	K171	K253	Algemeen (0)	standaard	Laag2
S81	CS1 - Rechthoek (450; 450)	19,190	Lijn	K177	K254	Algemeen (0)	standaard	Laag2
S82	CS1 - Rechthoek (450; 450)	19,190	Lijn	K178	K255	Algemeen (0)	standaard	Laag2
S83	CS1 - Rechthoek (450; 450)	19,000	Lijn	K259	K258	Algemeen (0)	standaard	Laag2

7. 2D-element

Naam	Materiaal	D. [mm]	Dikte type	Type	Laag
E2	C30/37	3000	konstant	vloer (90)	Laag1

8. Subregio

Naam, 2D-element, Materiaal, Dikte type	Regio3	E2	C30/37	konstant		
2D-element systeemvlak op, Exc. z [mm], D. [mm], Punt 4, Knoop, Rand, Gewicht	Boven	0		1800	K156	Cirkelboog
					K157	
					K155	Lijn

Naam, 2D-element, Materiaal, Dikte type	Regio4	E2	C30/37	konstant		
2D-element systeemvlak op, Exc. z [mm], D. [mm], Punt 4, Knoop, Rand, Gewicht	Boven	0		1800	K144	Lijn
					K145	Cirkelboog
					K146	

Naam, 2D-element, Materiaal, Dikte type	Regio6	E2	C30/37	konstant		
2D-element systeemvlak op, Exc. z [mm], D. [mm], Punt 4, Knoop, Rand, Gewicht	Boven	0		1800	K153	Cirkelboog
					K154	
					K152	Lijn

Naam, 2D-element, Materiaal, Dikte type	Regio7	E2	C30/37	konstant		
2D-element systeemvlak op, Exc. z [mm], D. [mm], Punt 4, Knoop, Rand, Gewicht	Boven	0		1800	K147	Lijn
					K148	Cirkelboog
					K149	

Naam, 2D-element, Materiaal, Dikte type	Regio8	E2	C30/37	konstant		
2D-element systeemvlak op, Exc. z [mm], D. [mm], Punt 4, Knoop, Rand, Gewicht	Onder	0		1200	K158	Lijn
					K156	Cirkelboog
					K159	
					K144	Lijn
					K143	Lijn

Naam, 2D-element, Materiaal, Dikte type	Regio9	E2	C30/37	konstant		
2D-element systeemvlak op, Exc. z [mm], D. [mm], Punt 4, Knoop, Rand, Gewicht	Onder	0		1200	K160	Cirkelboog
					K162	
					K161	Lijn
					K163	Cirkelboog

2D-element systeemvlak op, Exc. z [mm], D. [mm], Punt 4, Knoop, Rand, Gewicht	Onder	0		1200	K165 K164	 Lijn
Naam, 2D-element, Materiaal, Dikte type	Regio10	E2	C30/37	konstant		
2D-element systeemvlak op, Exc. z [mm], D. [mm], Punt 4, Knoop, Rand, Gewicht	Onder	0		1200	K152 K151 K150 K148 K166	Lijn Lijn Lijn Cirkelboog

9. Knoopondersteuningen

Naam	Knoop	Systeem	Type	X	Y	Z	Stijfheid Z [MN/m]	Rx	Ry	Rz
Sn9	K81	GCS	Standaard	Vrij	Vrij	Verend	1,2000e+02	Vrij	Vrij	Vrij
Sn14	K92	GCS	Standaard	Vrij	Vrij	Verend	1,2000e+02	Vrij	Vrij	Vrij
Sn43	K181	GCS	Standaard	Vrij	Vrij	Verend	1,2000e+02	Vrij	Vrij	Vrij
Sn47	K176	GCS	Standaard	Vrij	Vrij	Verend	1,2000e+02	Vrij	Vrij	Vrij
Sn49	K175	GCS	Standaard	Vrij	Vrij	Verend	1,2000e+02	Vrij	Vrij	Vrij
Sn50	K187	GCS	Standaard	Vrij	Vrij	Verend	1,2000e+02	Vrij	Vrij	Vrij
Sn58	K218	GCS	Standaard	Vrij	Vrij	Verend	1,2000e+02	Vrij	Vrij	Vrij
Sn59	K219	GCS	Standaard	Vrij	Vrij	Verend	1,2000e+02	Vrij	Vrij	Vrij
Sn71	K252	GCS	Standaard	Vrij	Vrij	Verend	1,2000e+02	Vrij	Vrij	Vrij
Sn72	K253	GCS	Standaard	Vrij	Vrij	Verend	1,2000e+02	Vrij	Vrij	Vrij
Sn73	K254	GCS	Standaard	Vrij	Vrij	Verend	1,2000e+02	Vrij	Vrij	Vrij
Sn74	K255	GCS	Standaard	Vrij	Vrij	Verend	1,2000e+02	Vrij	Vrij	Vrij
Sn75	K258	GCS	Standaard	Vrij	Vrij	Verend	1,2000e+02	Vrij	Vrij	Vrij

10. Lijnondersteuning op staaf

Staaf	Naam Systeem	Pos x_1 [m] Pos x_2 [m]	Coör Oors	X	Y	Stijfheid Y [MN/m²]	Z	Stijfheid Z [MN/m²]	Rx	Ry	Rz
S19	Slb14 LCS	1,100 3,500	Abso Vanaf begin	Vrij	Verend	4,5000e-01	Verend	4,5000e-01	Vrij	Vrij	Vrij
S19	Slb79 LCS	20,400 22,000	Abso Vanaf begin	Vrij	Verend	1,2450e+01	Verend	1,2450e+01	Vrij	Vrij	Vrij
S19	Slb53 LCS	9,600 10,500	Abso Vanaf begin	Vrij	Verend	1,0500e+00	Verend	1,0500e+00	Vrij	Vrij	Vrij
S19	Slb27 LCS	3,500 4,400	Abso Vanaf begin	Vrij	Verend	1,0500e+00	Verend	1,0500e+00	Vrij	Vrij	Vrij
S19	Slb66 LCS	10,500 20,400	Abso Vanaf begin	Vrij	Verend	1,0350e+01	Verend	1,0350e+01	Vrij	Vrij	Vrij
S19	Slb40 LCS	4,400 9,600	Abso Vanaf begin	Vrij	Verend	6,0000e-01	Verend	6,0000e-01	Vrij	Vrij	Vrij
S19	Slb1 LCS	0,000 1,100	Abso Vanaf begin	Vrij	Verend	1,0500e+00	Verend	1,0500e+00	Vrij	Vrij	Vrij
S24	Slb2 LCS	0,000 1,100	Abso Vanaf begin	Vrij	Verend	1,0500e+00	Verend	1,0500e+00	Vrij	Vrij	Vrij
S24	Slb41 LCS	4,400 9,600	Abso Vanaf begin	Vrij	Verend	6,0000e-01	Verend	6,0000e-01	Vrij	Vrij	Vrij
S24	Slb80 LCS	20,400 22,000	Abso Vanaf begin	Vrij	Verend	1,2450e+01	Verend	1,2450e+01	Vrij	Vrij	Vrij
S24	Slb15 LCS	1,100 3,500	Abso Vanaf begin	Vrij	Verend	4,5000e-01	Verend	4,5000e-01	Vrij	Vrij	Vrij
S24	Slb28 LCS	3,500 4,400	Abso Vanaf begin	Vrij	Verend	1,0500e+00	Verend	1,0500e+00	Vrij	Vrij	Vrij
S24	Slb54 LCS	9,600 10,500	Abso Vanaf begin	Vrij	Verend	1,0500e+00	Verend	1,0500e+00	Vrij	Vrij	Vrij
S24	Slb67 LCS	10,500 20,400	Abso Vanaf begin	Vrij	Verend	1,0350e+01	Verend	1,0350e+01	Vrij	Vrij	Vrij
S54	Slb81 LCS	20,400 22,000	Abso Vanaf begin	Vrij	Verend	1,2450e+01	Verend	1,2450e+01	Vrij	Vrij	Vrij
S54	Slb29 LCS	3,500 4,400	Abso Vanaf begin	Vrij	Verend	1,0500e+00	Verend	1,0500e+00	Vrij	Vrij	Vrij
S54	Slb68 LCS	10,500 20,400	Abso Vanaf begin	Vrij	Verend	1,0350e+01	Verend	1,0350e+01	Vrij	Vrij	Vrij
S54	Slb42 LCS	4,400 9,600	Abso Vanaf begin	Vrij	Verend	6,0000e-01	Verend	6,0000e-01	Vrij	Vrij	Vrij
S54	Slb55 LCS	9,600 10,500	Abso Vanaf begin	Vrij	Verend	1,0500e+00	Verend	1,0500e+00	Vrij	Vrij	Vrij
S54	Slb16 LCS	1,100 3,500	Abso Vanaf begin	Vrij	Verend	4,5000e-01	Verend	4,5000e-01	Vrij	Vrij	Vrij

Staaf	Naam Systeem	Pos x_1 [m] Pos x_2 [m]	Coör Oors	X	Y	Stijfheid Y [MN/m²]	Z	Stijfheid Z [MN/m²]	Rx	Ry	Rz
S54	Slb3 LCS	0,000 1,100	Abso Vanaf begin	Vrij	Verend	1,0500e+00	Verend	1,0500e+00	Vrij	Vrij	Vrij
S55	Slb43 LCS	4,400 9,600	Abso Vanaf begin	Vrij	Verend	6,0000e-01	Verend	6,0000e-01	Vrij	Vrij	Vrij
S55	Slb56 LCS	9,600 10,500	Abso Vanaf begin	Vrij	Verend	1,0500e+00	Verend	1,0500e+00	Vrij	Vrij	Vrij
S55	Slb82 LCS	20,400 22,000	Abso Vanaf begin	Vrij	Verend	1,2450e+01	Verend	1,2450e+01	Vrij	Vrij	Vrij
S55	Slb30 LCS	3,500 4,400	Abso Vanaf begin	Vrij	Verend	1,0500e+00	Verend	1,0500e+00	Vrij	Vrij	Vrij
S55	Slb17 LCS	1,100 3,500	Abso Vanaf begin	Vrij	Verend	4,5000e-01	Verend	4,5000e-01	Vrij	Vrij	Vrij
S55	Slb69 LCS	10,500 20,400	Abso Vanaf begin	Vrij	Verend	1,0350e+01	Verend	1,0350e+01	Vrij	Vrij	Vrij
S55	Slb4 LCS	0,000 1,100	Abso Vanaf begin	Vrij	Verend	1,0500e+00	Verend	1,0500e+00	Vrij	Vrij	Vrij
S56	Slb18 LCS	1,100 3,500	Abso Vanaf begin	Vrij	Verend	4,5000e-01	Verend	4,5000e-01	Vrij	Vrij	Vrij
S56	Slb70 LCS	10,500 20,400	Abso Vanaf begin	Vrij	Verend	1,0350e+01	Verend	1,0350e+01	Vrij	Vrij	Vrij
S56	Slb57 LCS	9,600 10,500	Abso Vanaf begin	Vrij	Verend	1,0500e+00	Verend	1,0500e+00	Vrij	Vrij	Vrij
S56	Slb5 LCS	0,000 1,100	Abso Vanaf begin	Vrij	Verend	1,0500e+00	Verend	1,0500e+00	Vrij	Vrij	Vrij
S56	Slb44 LCS	4,400 9,600	Abso Vanaf begin	Vrij	Verend	6,0000e-01	Verend	6,0000e-01	Vrij	Vrij	Vrij
S56	Slb83 LCS	20,400 22,000	Abso Vanaf begin	Vrij	Verend	1,2450e+01	Verend	1,2450e+01	Vrij	Vrij	Vrij
S56	Slb31 LCS	3,500 4,400	Abso Vanaf begin	Vrij	Verend	1,0500e+00	Verend	1,0500e+00	Vrij	Vrij	Vrij
S59	Slb71 LCS	10,500 20,400	Abso Vanaf begin	Vrij	Verend	1,0350e+01	Verend	1,0350e+01	Vrij	Vrij	Vrij
S59	Slb45 LCS	4,400 9,600	Abso Vanaf begin	Vrij	Verend	6,0000e-01	Verend	6,0000e-01	Vrij	Vrij	Vrij
S59	Slb58 LCS	9,600 10,500	Abso Vanaf begin	Vrij	Verend	1,0500e+00	Verend	1,0500e+00	Vrij	Vrij	Vrij
S59	Slb84 LCS	20,400 22,000	Abso Vanaf begin	Vrij	Verend	1,2450e+01	Verend	1,2450e+01	Vrij	Vrij	Vrij
S59	Slb6 LCS	0,000 1,100	Abso Vanaf begin	Vrij	Verend	1,0500e+00	Verend	1,0500e+00	Vrij	Vrij	Vrij
S59	Slb19 LCS	1,100 3,500	Abso Vanaf begin	Vrij	Verend	4,5000e-01	Verend	4,5000e-01	Vrij	Vrij	Vrij
S59	Slb32 LCS	3,500 4,400	Abso Vanaf begin	Vrij	Verend	1,0500e+00	Verend	1,0500e+00	Vrij	Vrij	Vrij
S66	Slb72 LCS	10,500 20,400	Abso Vanaf begin	Vrij	Verend	1,0350e+01	Verend	1,0350e+01	Vrij	Vrij	Vrij
S66	Slb85 LCS	20,400 22,000	Abso Vanaf begin	Vrij	Verend	1,2450e+01	Verend	1,2450e+01	Vrij	Vrij	Vrij
S66	Slb7 LCS	0,000 1,100	Abso Vanaf begin	Vrij	Verend	1,0500e+00	Verend	1,0500e+00	Vrij	Vrij	Vrij
S66	Slb20 LCS	1,100 3,500	Abso Vanaf begin	Vrij	Verend	4,5000e-01	Verend	4,5000e-01	Vrij	Vrij	Vrij
S66	Slb46 LCS	4,400 9,600	Abso Vanaf begin	Vrij	Verend	6,0000e-01	Verend	6,0000e-01	Vrij	Vrij	Vrij
S66	Slb33 LCS	3,500 4,400	Abso Vanaf begin	Vrij	Verend	1,0500e+00	Verend	1,0500e+00	Vrij	Vrij	Vrij
S66	Slb59 LCS	9,600 10,500	Abso Vanaf begin	Vrij	Verend	1,0500e+00	Verend	1,0500e+00	Vrij	Vrij	Vrij
S67	Slb21 LCS	1,100 3,500	Abso Vanaf begin	Vrij	Verend	4,5000e-01	Verend	4,5000e-01	Vrij	Vrij	Vrij
S67	Slb60 LCS	9,600 10,500	Abso Vanaf begin	Vrij	Verend	1,0500e+00	Verend	1,0500e+00	Vrij	Vrij	Vrij
S67	Slb86 LCS	20,400 22,000	Abso Vanaf begin	Vrij	Verend	1,2450e+01	Verend	1,2450e+01	Vrij	Vrij	Vrij
S67	Slb47 LCS	4,400 9,600	Abso Vanaf begin	Vrij	Verend	6,0000e-01	Verend	6,0000e-01	Vrij	Vrij	Vrij
S67	Slb8 LCS	0,000 1,100	Abso Vanaf begin	Vrij	Verend	1,0500e+00	Verend	1,0500e+00	Vrij	Vrij	Vrij
S67	Slb34 LCS	3,500 4,400	Abso Vanaf begin	Vrij	Verend	1,0500e+00	Verend	1,0500e+00	Vrij	Vrij	Vrij
S67	Slb73 LCS	10,500 20,400	Abso Vanaf begin	Vrij	Verend	1,0350e+01	Verend	1,0350e+01	Vrij	Vrij	Vrij

Staaf	Naam Systeem	Pos x_1 [m] Pos x_2 [m]	Coör Oors	X	Y	Stijfheid Y [MN/m²]	Z	Stijfheid Z [MN/m²]	Rx	Ry	Rz
S79	Slb62 LCS	9,600 10,500	Abso Vanaf begin	Vrij	Verend	1,0500e+00	Verend	1,0500e+00	Vrij	Vrij	Vrij
S79	Slb23 LCS	1,100 3,500	Abso Vanaf begin	Vrij	Verend	4,5000e-01	Verend	4,5000e-01	Vrij	Vrij	Vrij
S79	Slb88 LCS	20,400 22,000	Abso Vanaf begin	Vrij	Verend	1,2450e+01	Verend	1,2450e+01	Vrij	Vrij	Vrij
S79	Slb10 LCS	0,000 1,100	Abso Vanaf begin	Vrij	Verend	1,0500e+00	Verend	1,0500e+00	Vrij	Vrij	Vrij
S79	Slb36 LCS	3,500 4,400	Abso Vanaf begin	Vrij	Verend	1,0500e+00	Verend	1,0500e+00	Vrij	Vrij	Vrij
S79	Slb75 LCS	10,500 20,400	Abso Vanaf begin	Vrij	Verend	1,0350e+01	Verend	1,0350e+01	Vrij	Vrij	Vrij
S79	Slb49 LCS	4,400 9,600	Abso Vanaf begin	Vrij	Verend	6,0000e-01	Verend	6,0000e-01	Vrij	Vrij	Vrij
S80	Slb89 LCS	20,400 22,000	Abso Vanaf begin	Vrij	Verend	1,2450e+01	Verend	1,2450e+01	Vrij	Vrij	Vrij
S80	Slb76 LCS	10,500 20,400	Abso Vanaf begin	Vrij	Verend	1,0350e+01	Verend	1,0350e+01	Vrij	Vrij	Vrij
S80	Slb24 LCS	1,100 3,500	Abso Vanaf begin	Vrij	Verend	4,5000e-01	Verend	4,5000e-01	Vrij	Vrij	Vrij
S80	Slb37 LCS	3,500 4,400	Abso Vanaf begin	Vrij	Verend	1,0500e+00	Verend	1,0500e+00	Vrij	Vrij	Vrij
S80	Slb50 LCS	4,400 9,600	Abso Vanaf begin	Vrij	Verend	6,0000e-01	Verend	6,0000e-01	Vrij	Vrij	Vrij
S80	Slb11 LCS	0,000 1,100	Abso Vanaf begin	Vrij	Verend	1,0500e+00	Verend	1,0500e+00	Vrij	Vrij	Vrij
S80	Slb63 LCS	9,600 10,500	Abso Vanaf begin	Vrij	Verend	1,0500e+00	Verend	1,0500e+00	Vrij	Vrij	Vrij
S81	Slb38 LCS	3,500 4,400	Abso Vanaf begin	Vrij	Verend	1,0500e+00	Verend	1,0500e+00	Vrij	Vrij	Vrij
S81	Slb90 LCS	20,400 22,000	Abso Vanaf begin	Vrij	Verend	1,2450e+01	Verend	1,2450e+01	Vrij	Vrij	Vrij
S81	Slb12 LCS	0,000 1,100	Abso Vanaf begin	Vrij	Verend	1,0500e+00	Verend	1,0500e+00	Vrij	Vrij	Vrij
S81	Slb25 LCS	1,100 3,500	Abso Vanaf begin	Vrij	Verend	4,5000e-01	Verend	4,5000e-01	Vrij	Vrij	Vrij
S81	Slb77 LCS	10,500 20,400	Abso Vanaf begin	Vrij	Verend	1,0350e+01	Verend	1,0350e+01	Vrij	Vrij	Vrij
S81	Slb51 LCS	4,400 9,600	Abso Vanaf begin	Vrij	Verend	6,0000e-01	Verend	6,0000e-01	Vrij	Vrij	Vrij
S81	Slb64 LCS	9,600 10,500	Abso Vanaf begin	Vrij	Verend	1,0500e+00	Verend	1,0500e+00	Vrij	Vrij	Vrij
S82	Slb52 LCS	4,400 9,600	Abso Vanaf begin	Vrij	Verend	6,0000e-01	Verend	6,0000e-01	Vrij	Vrij	Vrij
S82	Slb91 LCS	20,400 22,000	Abso Vanaf begin	Vrij	Verend	1,2450e+01	Verend	1,2450e+01	Vrij	Vrij	Vrij
S82	Slb65 LCS	9,600 10,500	Abso Vanaf begin	Vrij	Verend	1,0500e+00	Verend	1,0500e+00	Vrij	Vrij	Vrij
S82	Slb78 LCS	10,500 20,400	Abso Vanaf begin	Vrij	Verend	1,0350e+01	Verend	1,0350e+01	Vrij	Vrij	Vrij
S82	Slb39 LCS	3,500 4,400	Abso Vanaf begin	Vrij	Verend	1,0500e+00	Verend	1,0500e+00	Vrij	Vrij	Vrij
S82	Slb13 LCS	0,000 1,100	Abso Vanaf begin	Vrij	Verend	1,0500e+00	Verend	1,0500e+00	Vrij	Vrij	Vrij
S82	Slb26 LCS	1,100 3,500	Abso Vanaf begin	Vrij	Verend	4,5000e-01	Verend	4,5000e-01	Vrij	Vrij	Vrij
S83	Slb96 LCS	9,600 10,500	Abso Vanaf begin	Vrij	Verend	1,0500e+00	Verend	1,0500e+00	Vrij	Vrij	Vrij
S83	Slb97 LCS	10,500 20,400	Abso Vanaf begin	Vrij	Verend	1,0350e+01	Verend	1,0350e+01	Vrij	Vrij	Vrij
S83	Slb98 LCS	20,400 22,000	Abso Vanaf begin	Vrij	Verend	1,2450e+01	Verend	1,2450e+01	Vrij	Vrij	Vrij
S83	Slb95 LCS	4,400 9,600	Abso Vanaf begin	Vrij	Verend	6,0000e-01	Verend	6,0000e-01	Vrij	Vrij	Vrij
S83	Slb92 LCS	0,000 1,100	Abso Vanaf begin	Vrij	Verend	1,0500e+00	Verend	1,0500e+00	Vrij	Vrij	Vrij
S83	Slb93 LCS	1,100 3,500	Abso Vanaf begin	Vrij	Verend	4,5000e-01	Verend	4,5000e-01	Vrij	Vrij	Vrij
S83	Slb94 LCS	3,500 4,400	Abso Vanaf begin	Vrij	Verend	1,0500e+00	Verend	1,0500e+00	Vrij	Vrij	Vrij

11. Belastingsgevallen

11.1. Belastingsgevallen - BG1

Naam	Omschrijving	Actie type	Lastgroep	Belastingtype	Richting
BG1	Eigengewicht	Permanent	LG8	Eigen gewicht	-Z

11.1.1. Belasting grafisch

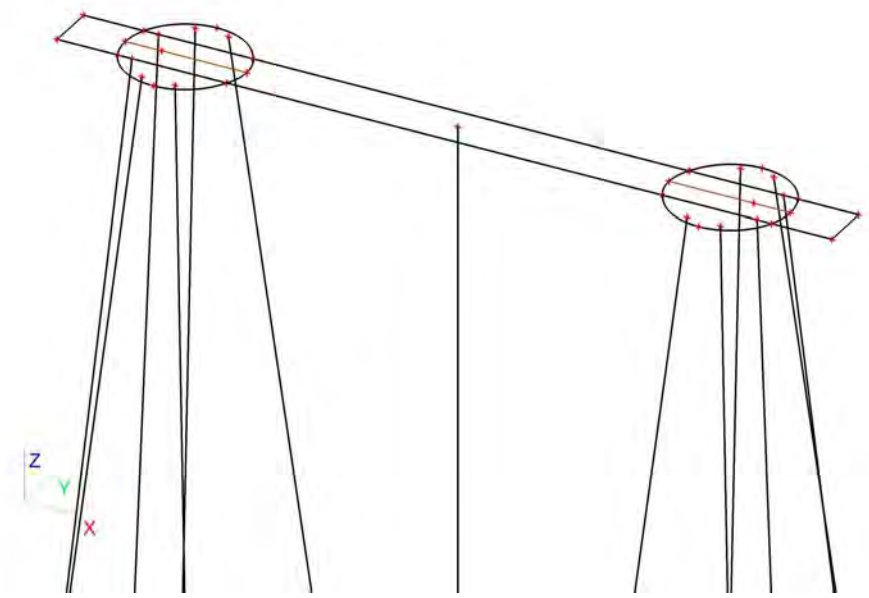

11.2. Belastingsgevallen - BG3

Naam	Omschrijving	Actie type	Lastgroep	Belastingtype	Spec	Duur	'Master' belastingsgeval
BG3	ULS 1	Variabel	LG7	Statisch	Standaard	Kort	Geen

11.2.1. Vrije puntmomenten

Typenaam	Naam	Rich	Type	Geldigheid	Selecteer	Waarde - F [kNm]	Belastingsgeval	Coördinaat X [m]	Coördinaat Y [m]	Coördinaat Z [m]	Coördinaat ux [m]	Coördinaat uy [m]	Coördinaat uz [m]	Systeem
Vrij puntmoment	FM1	Mx	Moment	Alle	Auto	0,00	BG3 - ULS 1	2,450	0,750	0,000	2,450	0,750	0,000	GCS
Vrij puntmoment	FM2	Mx	Moment	Alle	Auto	0,00	BG3 - ULS 1	18,850	0,750	0,000	18,850	0,750	0,000	GCS
Vrij puntmoment	FM3	My	Moment	Alle	Auto	14507,00	BG3 - ULS 1	2,450	0,750	0,000	2,450	0,750	0,000	GCS
Vrij puntmoment	FM4	My	Moment	Alle	Auto	14507,00	BG3 - ULS 1	18,850	0,750	0,000	18,850	0,750	0,000	GCS
Vrij puntmoment	FM5	Mx	Moment	Alle	Auto	0,00	BG3 - ULS 1	2,450	0,750	0,000	2,450	0,750	0,000	GCS
Vrij puntmoment	FM6	Mx	Moment	Alle	Auto	0,00	BG3 - ULS 1	18,850	0,750	0,000	18,850	0,750	0,000	GCS
Vrij puntmoment	FM7	My	Moment	Alle	Auto	953,70	BG3 - ULS 1	2,450	0,750	0,000	-13,960	0,757	0,000	GCS
Vrij puntmoment	FM8	My	Moment	Alle	Auto	953,70	BG3 - ULS 1	18,850	0,750	0,000	2,440	0,757	0,000	GCS

11.2.2. Genereer vrije lasten

Naam	Belastingsgeval	2D-element	Rich	Belastingstype Type	Oorspronkelijke belasting	Waarde - F [kN] Waarde - F [kNm]	Systeem Locatie
GFF1	BG3 - ULS 1	E2	Z	Punt Kracht	FF1	-565,00	GCS Lengte
GFF4	BG3 - ULS 1	E2	Z	Punt Kracht	FF2	-565,00	GCS Lengte
GFF5	BG3 - ULS 1	E2	Mx	Punt Moment	FM6	0,00	GCS Lengte
GFF6	BG3 - ULS 1	E2	Y	Punt Kracht	FF3	0,00	GCS Lengte
GFF7	BG3 - ULS 1	E2	X	Punt Kracht	FF5	374,00	GCS Lengte

Naam	Belastingsgeval	2D-element	Rich	Belastingstype Type	Oorspronkelijke belasting	Waarde - F [kN] Waarde - F [kNm]	Systeem Locatie
GFF9	BG3 - ULS 1	E2	Y	Punt Kracht	FF4	0,00	GCS Lengte
GFF10	BG3 - ULS 1	E2	X	Punt Kracht	FF6	374,00	GCS Lengte
GFF25	BG3 - ULS 1	E2	My	Punt Moment	FM7	953,70	GCS Lengte
GFF27	BG3 - ULS 1	E2	My	Punt Moment	FM8	953,70	GCS Lengte
GFF41	BG3 - ULS 1	E2	Mx	Punt Moment	FM1	0,00	GCS Lengte
GFF42	BG3 - ULS 1	E2	Mx	Punt Moment	FM2	0,00	GCS Lengte
GFF43	BG3 - ULS 1	E2	My	Punt Moment	FM3	14507,00	GCS Lengte
GFF44	BG3 - ULS 1	E2	My	Punt Moment	FM4	14507,00	GCS Lengte
GFF45	BG3 - ULS 1	E2	Mx	Punt Moment	FM5	0,00	GCS Lengte

11.2.3. Belasting grafisch

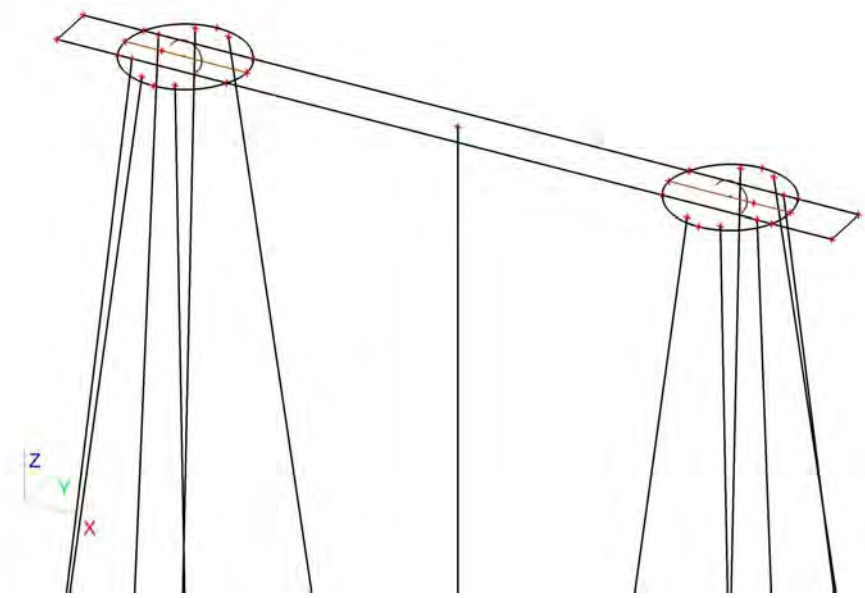

11.3. Belastingsgevallen - BG2

Naam	Omschrijving	Actie type	Lastgroep	Belastingtype
BG2	Grond	Permanent	LG8	Standaard

11.3.1. Lasten op oppervlak

Naam	Rich	Type	Waarde [kN/m²]	Belastingsgeval	Systeem	Loc
SF1	Z	Kracht	-25,50	BG2 - Grond	LCS	Lengte
SF2	Z	Kracht	-25,50	BG2 - Grond	LCS	Lengte
SF3	Z	Kracht	-25,50	BG2 - Grond	LCS	Lengte

11.3.2. Belasting grafisch

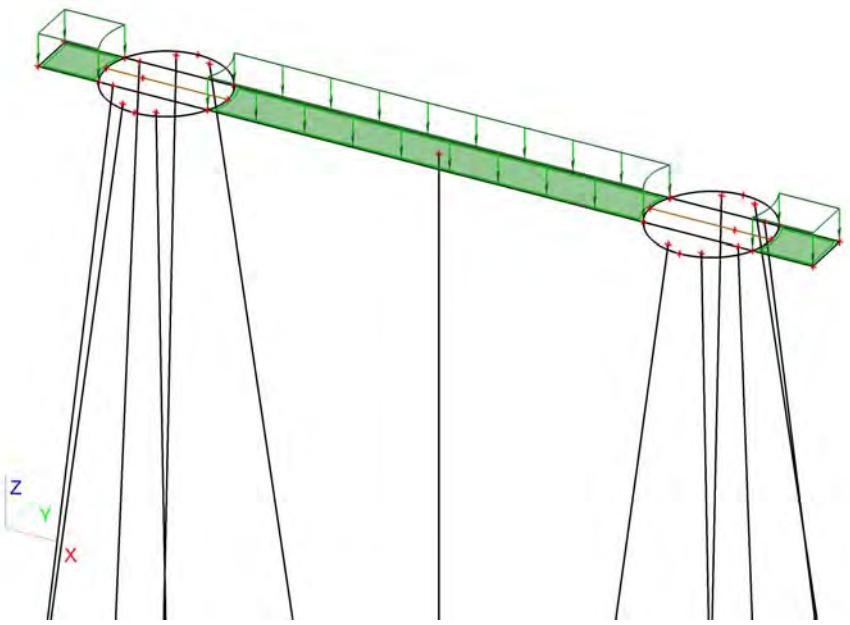

11.4. Belastingsgevallen - BG4

Naam	Omschrijving	Actie type	Lastgroep	Belastingtype	Spec	Duur	'Master' belastingsgeval
BG4	ULS 2	Variabel	LG9	Statisch	Standaard	Kort	Geen

11.4.1. Vrije puntmomenten

Typenaam	Naam	Rich	Type	Geldigheid	Selecteer	Waarde - F [kNm]	Belastingsgeval	Coördinaat X [m]	Coördinaat Y [m]	Coördinaat Z [m]	Coördinaat ux [m]	Coördinaat uy [m]	Coördinaat uz [m]	Systeem
Vrij puntmoment	FM9	Mx	Moment	Alle	Auto	-4914,00	BG4 - ULS 2	2,450	0,750	0,000	3,703	0,750	0,000	GCS
Vrij puntmoment	FM10	Mx	Moment	Alle	Auto	-4914,00	BG4 - ULS 2	18,850	0,750	0,000	20,275	0,744	0,000	GCS
Vrij puntmoment	FM11	My	Moment	Alle	Auto	862,00	BG4 - ULS 2	2,450	0,750	0,000	-12,525	0,744	0,000	GCS
Vrij puntmoment	FM12	My	Moment	Alle	Auto	862,00	BG4 - ULS 2	18,850	0,750	0,000	3,703	0,750	0,000	GCS
Vrij puntmoment	FM13	Mx	Moment	Alle	Auto	397,80	BG4 - ULS 2	2,450	0,750	0,000	-13,950	0,750	0,000	GCS
Vrij puntmoment	FM14	Mx	Moment	Alle	Auto	397,80	BG4 - ULS 2	18,850	0,750	0,000	2,450	0,750	0,000	GCS
Vrij puntmoment	FM15	My	Moment	Alle	Auto	0,00	BG4 - ULS 2	2,450	0,750	0,000	-13,950	0,750	0,000	GCS
Vrij puntmoment	FM16	My	Moment	Alle	Auto	0,00	BG4 - ULS 2	18,850	0,750	0,000	2,450	0,750	0,000	GCS

11.4.2. Genereer vrije lasten

Naam	Belastingsgeval	2D-element	Rich	Belastingstype Type	Oorspronkelijke belasting	Waarde - F [kN] Waarde - F [kNm]	Systeem Locatie
GFF2	BG4 - ULS 2	E2	Y	Punt Kracht	FF9	156,00	GCS Lengte
GFF12	BG4 - ULS 2	E2	Z	Punt Kracht	FF7	-737,00	GCS Lengte
GFF13	BG4 - ULS 2	E2	Mx	Punt Moment	FM13	397,80	GCS Lengte
GFF14	BG4 - ULS 2	E2	Z	Punt Kracht	FF8	-737,00	GCS Lengte
GFF15	BG4 - ULS 2	E2	Mx	Punt Moment	FM14	397,80	GCS Lengte
GFF16	BG4 - ULS 2	E2	Y	Punt Kracht	FF10	156,00	GCS Lengte
GFF18	BG4 - ULS 2	E2	X	Punt Kracht	FF11	0,00	GCS Lengte
GFF19	BG4 - ULS 2	E2	X	Punt Kracht	FF12	0,00	GCS Lengte
GFF20	BG4 - ULS 2	E2	Mx	Punt Moment	FM10	-4914,00	GCS Lengte

Naam	Belastingsgeval	2D-element	Rich	Belastingstype Type	Oorspronkelijke belasting	Waarde - F [kN] Waarde - F [kNm]	Systeem Locatie
GFF22	BG4 - ULS 2	E2	My	Punt Moment	FM15	0,00	GCS Lengte
GFF24	BG4 - ULS 2	E2	My	Punt Moment	FM16	0,00	GCS Lengte
GFF29	BG4 - ULS 2	E2	My	Punt Moment	FM11	862,00	GCS Lengte
GFF31	BG4 - ULS 2	E2	My	Punt Moment	FM12	862,00	GCS Lengte
GFF46	BG4 - ULS 2	E2	Mx	Punt Moment	FM9	-4914,00	GCS Lengte

11.4.3. Belasting grafisch

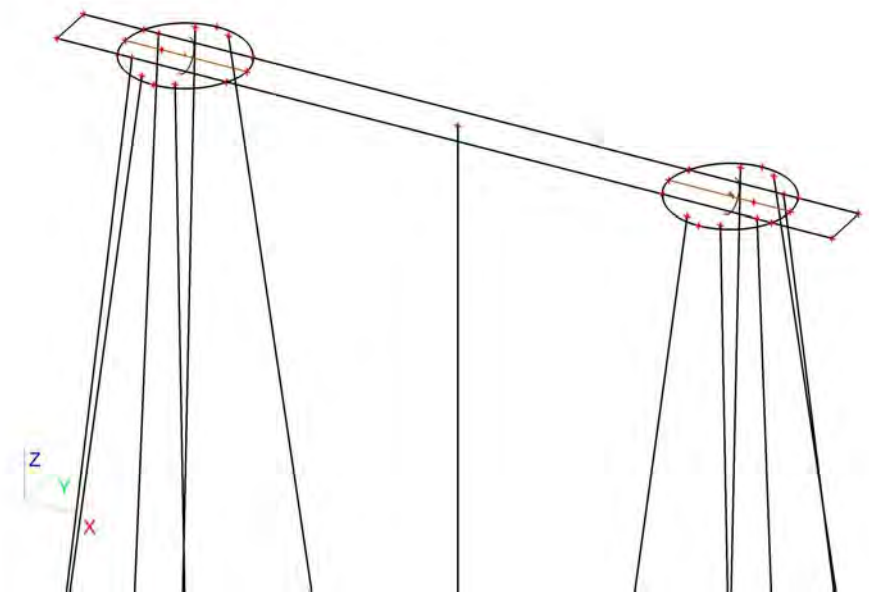

11.5. Belastingsgevallen - BG5

Naam	Omschrijving	Actie type	Lastgroep	Belastingtype	Spec	Duur	'Master' belastingsgeval
BG5	SLS 1	Variabel	LG9	Statisch	Standaard	Kort	Geen

11.5.1. Vrije puntmomenten

Typenaam	Naam	Rich	Type	Geldigheid	Selecteer	Waarde - F [kNm]	Belastingsgeval	Coördinaat X [m]	Coördinaat Y [m]	Coördinaat Z [m]	Coördinaat ux [m]	Coördinaat uy [m]	Coördinaat uz [m]	Systeem
Vrij puntmoment	FM17	Mx	Moment	Alle	Auto	-1805,00	BG5 - SLS 1	2,450	0,750	0,000	1,450	0,750	0,000	GCS
Vrij puntmoment	FM18	Mx	Moment	Alle	Auto	-1805,00	BG5 - SLS 1	18,850	0,750	0,000	17,850	0,750	0,000	GCS
Vrij puntmoment	FM19	My	Moment	Alle	Auto	10053,00	BG5 - SLS 1	2,450	0,750	0,000	1,450	0,750	0,000	GCS
Vrij puntmoment	FM20	My	Moment	Alle	Auto	10053,00	BG5 - SLS 1	18,850	0,750	0,000	17,850	0,750	0,000	GCS
Vrij puntmoment	FM21	Mx	Moment	Alle	Auto	165,75	BG5 - SLS 1	2,450	0,750	0,000	1,450	0,750	0,000	GCS
Vrij puntmoment	FM22	Mx	Moment	Alle	Auto	165,75	BG5 - SLS 1	18,850	0,750	0,000	17,850	0,750	0,000	GCS
Vrij puntmoment	FM23	My	Moment	Alle	Auto	165,75	BG5 - SLS 1	2,450	0,750	0,000	1,450	0,750	0,000	GCS
Vrij puntmoment	FM24	My	Moment	Alle	Auto	165,75	BG5 - SLS 1	18,850	0,750	0,000	17,850	0,750	0,000	GCS
Vrij puntmoment	FM29	Mx	Moment	Alle	Auto	459,00	BG5 - SLS 1	2,450	0,750	0,000	1,450	0,750	0,000	GCS
Vrij puntmoment	FM30	Mx	Moment	Alle	Auto	459,00	BG5 - SLS 1	18,850	0,750	0,000	17,850	0,750	0,000	GCS
Vrij puntmoment	FM31	My	Moment	Alle	Auto	400,35	BG5 - SLS 1	2,450	0,750	0,000	-14,960	0,757	0,000	GCS
Vrij puntmoment	FM32	My	Moment	Alle	Auto	400,35	BG5 - SLS 1	18,850	0,750	0,000	1,440	0,757	0,000	GCS

11.5.2. Genereer vrije lasten

Naam	Belastingsgeval	2D-element	Rich	Belastingstype Type	Oorspronkelijke belasting	Waarde - F [kN] Waarde - F [kNm]	Systeem Locatie
GFF3	BG5 - SLS 1	E2	My	Punt Moment	FM19	10053,00	GCS Lengte
GFF8	BG5 - SLS 1	E2	Mx	Punt Moment	FM17	-1805,00	GCS Lengte
GFF11	BG5 - SLS 1	E2	Mx	Punt Moment	FM18	-1805,00	GCS Lengte
GFF17	BG5 - SLS 1	E2	My	Punt Moment	FM20	10053,00	GCS Lengte
GFF21	BG5 - SLS 1	E2	Z	Punt Kracht	FF13	-471,00	GCS Lengte
GFF23	BG5 - SLS 1	E2	Z	Punt Kracht	FF14	-471,00	GCS Lengte
GFF26	BG5 - SLS 1	E2	Y	Punt Kracht	FF15	65,00	GCS Lengte
GFF28	BG5 - SLS 1	E2	Y	Punt Kracht	FF16	65,00	GCS Lengte
GFF30	BG5 - SLS 1	E2	X	Punt Kracht	FF17	257,00	GCS Lengte
GFF32	BG5 - SLS 1	E2	X	Punt Kracht	FF18	257,00	GCS Lengte
GFF38	BG5 - SLS 1	E2	Mx	Punt Moment	FM29	459,00	GCS Lengte
GFF40	BG5 - SLS 1	E2	Mx	Punt Moment	FM30	459,00	GCS Lengte
GFF47	BG5 - SLS 1	E2	Mx	Punt Moment	FM21	165,75	GCS Lengte
GFF48	BG5 - SLS 1	E2	Mx	Punt Moment	FM22	165,75	GCS Lengte
GFF49	BG5 - SLS 1	E2	My	Punt Moment	FM23	165,75	GCS Lengte
GFF50	BG5 - SLS 1	E2	My	Punt Moment	FM24	165,75	GCS Lengte
GFF55	BG5 - SLS 1	E2	My	Punt Moment	FM31	400,35	GCS Lengte
GFF56	BG5 - SLS 1	E2	My	Punt Moment	FM32	400,35	GCS Lengte

11.5.3. Belasting grafisch

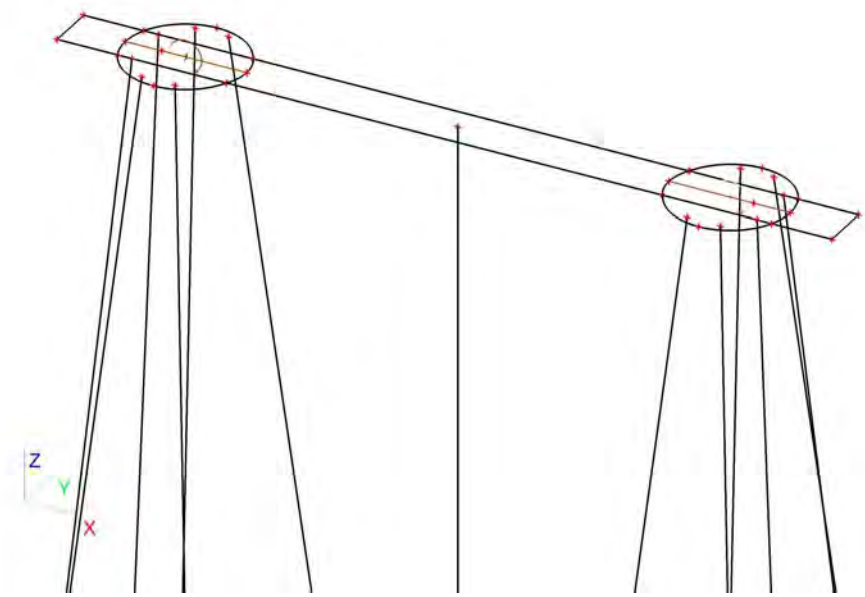

11.6. Belastingsgevallen - BG6

Naam	Omschrijving	Actie type	Lastgroep	Belastingtype	Spec	Duur	'Master' belastingsgeval
BG6	SLS 2	Variabel	LG9	Statisch	Standaard	Kort	Geen

11.6.1. Vrije puntmomenten

Typenaam	Naam	Rich	Type	Geldigheid	Selecteer	Waarde - F [kNm]	Belastingsgeval	Coördinaat X [m]	Coördinaat Y [m]	Coördinaat Z [m]	Coördinaat ux [m]	Coördinaat uy [m]	Coördinaat uz [m]	Systeem
Vrij puntmoment	FM25	Mx	Moment	Alle	Auto	-5585,00	BG6 - SLS 2	2,450	0,750	0,000	1,450	0,750	0,000	GCS
Vrij puntmoment	FM26	Mx	Moment	Alle	Auto	-5585,00	BG6 - SLS 2	18,850	0,750	0,000	17,850	0,750	0,000	GCS
Vrij puntmoment	FM27	My	Moment	Alle	Auto	6660,00	BG6 - SLS 2	2,450	0,750	0,000	1,450	0,750	0,000	GCS
Vrij puntmoment	FM28	My	Moment	Alle	Auto	6660,00	BG6 - SLS 2	18,850	0,750	0,000	17,850	0,750	0,000	GCS

11.6.2. Genereer vrije lasten

Naam	Belastingsgeval	2D-element	Rich	Belastingstype Type	Oorspronkelijke belasting	Waarde - F [kN] Waarde - F [kNm]	Systeem Locatie
GFF33	BG6 - SLS 2	E2	Z	Punt Kracht	FF19	-592,00	GCS Lengte
GFF34	BG6 - SLS 2	E2	Z	Punt Kracht	FF20	-592,00	GCS Lengte
GFF35	BG6 - SLS 2	E2	Y	Punt Kracht	FF21	180,00	GCS Lengte
GFF36	BG6 - SLS 2	E2	Y	Punt Kracht	FF22	180,00	GCS Lengte
GFF37	BG6 - SLS 2	E2	X	Punt Kracht	FF23	157,00	GCS Lengte
GFF39	BG6 - SLS 2	E2	X	Punt Kracht	FF24	157,00	GCS Lengte
GFF51	BG6 - SLS 2	E2	Mx	Punt Moment	FM25	-5585,00	GCS Lengte
GFF52	BG6 - SLS 2	E2	Mx	Punt Moment	FM26	-5585,00	GCS Lengte
GFF53	BG6 - SLS 2	E2	My	Punt Moment	FM27	6660,00	GCS Lengte
GFF54	BG6 - SLS 2	E2	My	Punt Moment	FM28	6660,00	GCS Lengte

11.6.3. Belasting grafisch

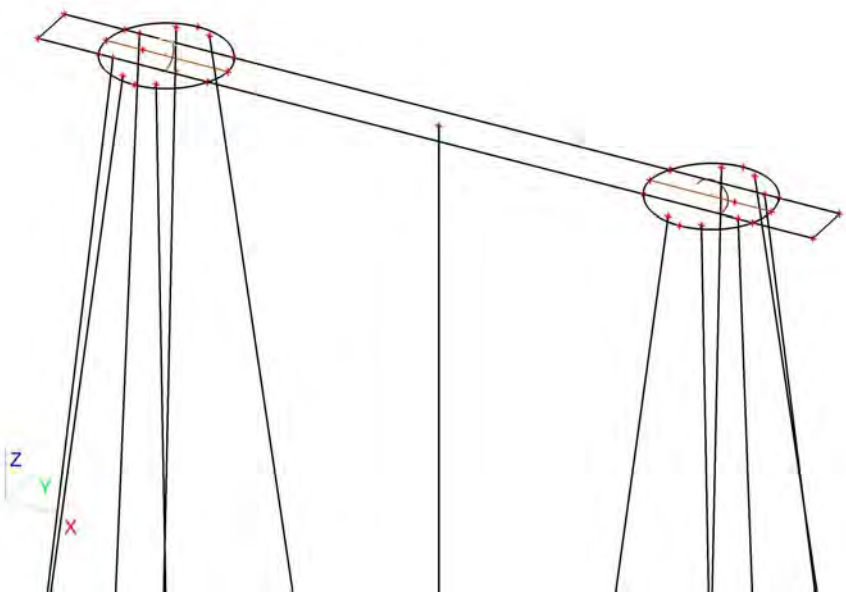

11.7. Belastingsgevallen - BG7

Naam	Omschrijving	Actie type	Lastgroep	Belastingtype	Spec	Duur	'Master' belastingsgeval
BG7	Belasting op maaiveld	Variabel	LG7	Statisch	Standaard	Kort	Geen

11.7.1. Lasten op oppervlak

Naam	Rich	Type	Waarde [kN/m²]	Belastingsgeval	Systeem	Loc
SF4	Z	Kracht	-10,00	BG7 - Belasting op maaiveld	LCS	Lengte
SF5	Z	Kracht	-10,00	BG7 - Belasting op maaiveld	LCS	Lengte
SF6	Z	Kracht	-10,00	BG7 - Belasting op maaiveld	LCS	Lengte

11.7.2. Belasting grafisch

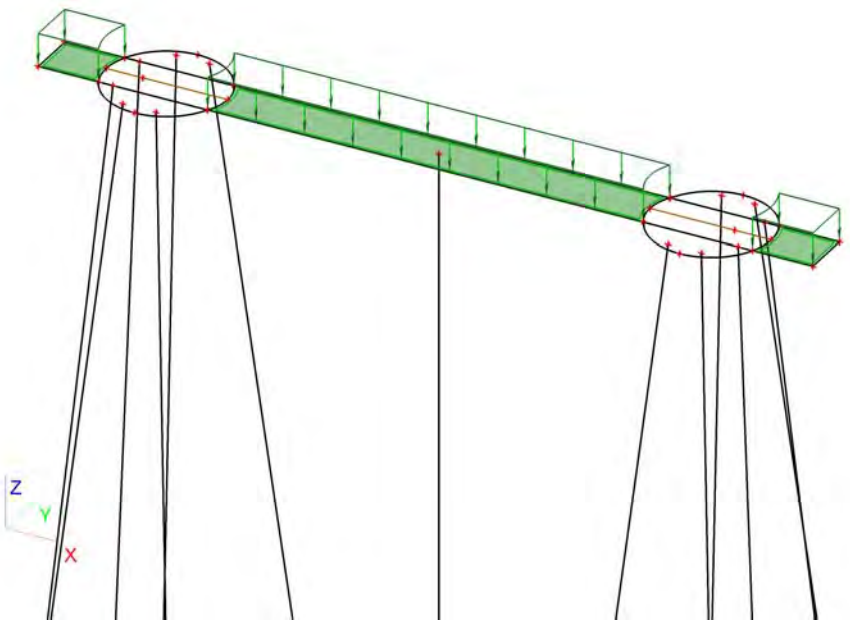

12. Combinaties

Naam	Type	Belastingsgevallen	Coëff. [-]
Combi1	Omhullende - uiterst	BG1 - Eigengewicht	1,30
		BG3 - ULS 1	1,00
		BG7 - Belasting op maaiveld	1,16
		BG2 - Grond	1,30
Combi2	Omhullende - uiterst	BG1 - Eigengewicht	1,30
		BG4 - ULS 2	1,00
		BG7 - Belasting op maaiveld	1,16
		BG2 - Grond	1,30
Combi3	Omhullende - uiterst	BG1 - Eigengewicht	1,30
		BG3 - ULS 1	0,60
		BG7 - Belasting op maaiveld	1,65
		BG2 - Grond	1,30
Combi4	Omhullende - uiterst	BG1 - Eigengewicht	1,30
		BG4 - ULS 2	0,60
		BG7 - Belasting op maaiveld	1,65
		BG2 - Grond	1,30
Combi5	Omhullende - uiterst	BG1 - Eigengewicht	0,54
		BG3 - ULS 1	1,00
		BG2 - Grond	0,54
Combi6	Omhullende -	BG1 - Eigengewicht	0,54

Naam	Type	Belastingsgevallen	Coëff. [-]
Combi6	Omhullende - sterkte	BG4 - ULS 2	1,00
		BG2 - Grond	0,54
Combi7	Omhullende - bruikbaarheid	BG1 - Eigengewicht	1,00
		BG5 - SLS 1	1,00
		BG7 - Belasting op maaiveld	1,16
		BG2 - Grond	1,00
Combi8	Omhullende - bruikbaarheid	BG1 - Eigengewicht	1,00
		BG6 - SLS 2	1,00
		BG7 - Belasting op maaiveld	0,70
		BG2 - Grond	1,00
Combi9	Omhullende - bruikbaarheid	BG1 - Eigengewicht	1,00
		BG5 - SLS 1	0,60
		BG7 - Belasting op maaiveld	1,00
		BG2 - Grond	1,00
Combi10	Omhullende - bruikbaarheid	BG1 - Eigengewicht	1,00
		BG6 - SLS 2	0,60
		BG7 - Belasting op maaiveld	1,00
		BG2 - Grond	1,00
Combi11	Omhullende - bruikbaarheid	BG1 - Eigengewicht	0,60
		BG5 - SLS 1	1,00
		BG2 - Grond	0,60
Combi12	Omhullende - bruikbaarheid	BG1 - Eigengewicht	0,60
		BG6 - SLS 2	1,00
		BG2 - Grond	0,60

13. Verplaatsing van knopen SLS 1

Lineaire berekening, Extreem : Globaal
Selectie : Alle
Belastingsgevallen : BG5

BG	Snede	elem	dx [m]	Ux [mm]	Uy [mm]	Uz [mm]	Fix [mrad]	Fiy [mrad]	Fiz [mrad]
BG5	Snede3	155	3,650	**11,6**	2,0	**-6,6**	-1,0	2,8	**0,3**
BG5	Snede2	19	3,000	**11,7**	2,0	-3,4	-1,0	2,7	-0,3
BG5	Snede3	126	2,250	11,6	**2,0**	-2,8	-1,0	2,8	0,3
BG5	Snede2	57	0,000	11,7	**2,0**	**4,9**	**-1,0**	2,8	**-0,3**
BG5	Snede2	14	1,750	11,7	2,0	0,0	**-1,0**	**2,9**	-0,3
BG5	Snede3	174	0,000	11,6	2,0	3,2	-1,0	**2,6**	0,2

14. Verplaatsing van knopen SLS 2

Lineaire berekening, Extreem : Globaal
Selectie : Alle
Belastingsgevallen : BG6

BG	Snede	elem	dx [m]	Ux [mm]	Uy [mm]	Uz [mm]	Fix [mrad]	Fiy [mrad]	Fiz [mrad]
BG6	Snede3	155	3,650	**7,1**	**5,2**	**-4,7**	-4,7	1,7	**1,8**
BG6	Snede2	19	3,000	**7,2**	5,1	-2,7	-4,7	1,7	-1,6
BG6	Snede2	16	2,250	7,2	**5,1**	-1,4	-4,8	1,8	-1,6
BG6	Snede2	57	0,000	7,2	5,2	**2,5**	**-4,7**	1,8	**-1,7**
BG6	Snede2	14	1,750	7,2	5,1	-0,5	**-4,8**	**1,8**	-1,6
BG6	Snede3	174	0,000	7,1	5,2	1,5	-4,7	**1,6**	1,5

15. Reacties

Lineaire berekening, Extreem : Globaal
Selectie : Alle
Klasse : UGT

Steunpunt	BG	dx [m]	Rx [kN]	Ry [kN]	Rz [kN]	Mx [kNm]	My [kNm]	Mz [kNm]
Slb76/S80	Combi2/1	18,224	**-42,45**	**-60,32**	-10,45	0,00	0,00	0,00
Slb78/S82	Combi2/1	18,224	**42,17**	-59,92	-10,38	0,00	0,00	0,00
Slb68/S54	Combi1/2	18,221	-31,64	**44,05**	-7,61	0,00	0,00	0,00
Sn58/K218	Combi5/3		-14,45	-13,91	**-421,41**	0,00	0,00	0,00
Sn72/K253	Combi2/1		-36,50	-51,69	**1084,25**	0,00	0,00	0,00
Sn50/K187	Combi1/2		-34,24	-33,00	1014,63	**0,00**	0,00	0,00
Sn14/K92	Combi6/4		25,60	-36,13	756,50	**0,00**	0,00	0,00
Sn9/K81	Combi1/2		1,63	2,37	56,84	0,00	**0,00**	0,00
Sn47/K176	Combi1/2		-27,24	-38,46	805,56	0,00	**0,00**	0,00
Sn50/K187	Combi2/5		-23,90	-22,94	712,73	0,00	0,00	**0,00**

Steunpunt	BG	dx [m]	Rx [kN]	Ry [kN]	Rz [kN]	Mx [kNm]	My [kNm]	Mz [kNm]
Sn9/K81	Combi1/6		1,14	1,68	42,59	0,00	0,00	**0,00**

16. 2D element - Interne krachten; mxD+

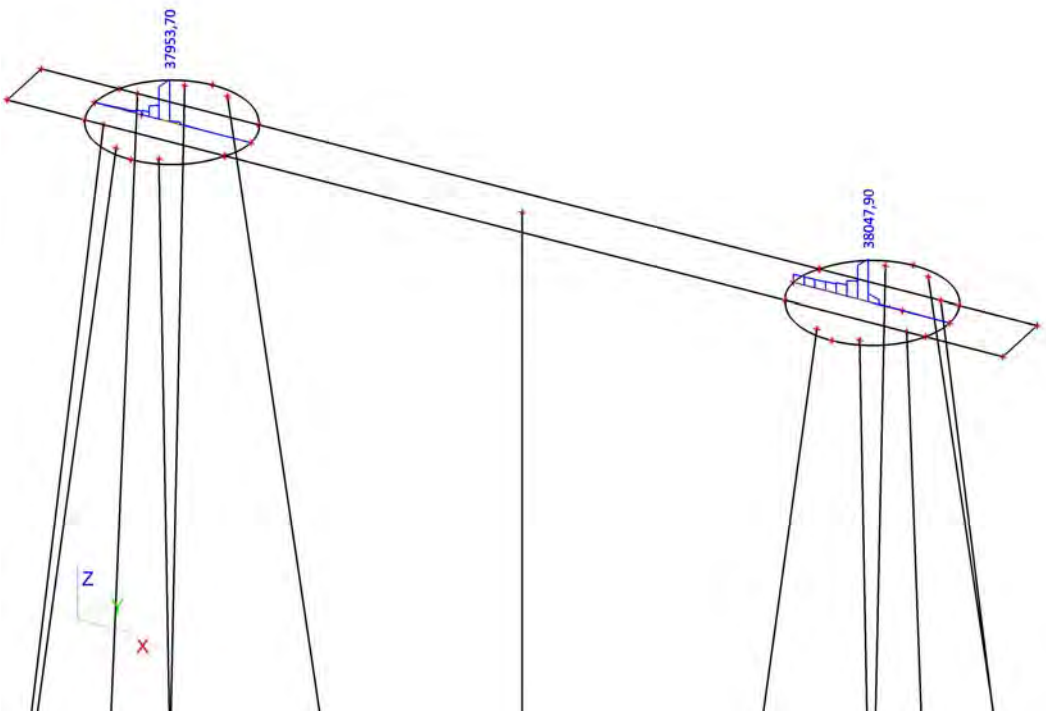

17. 2D element - Interne krachten; mxD-

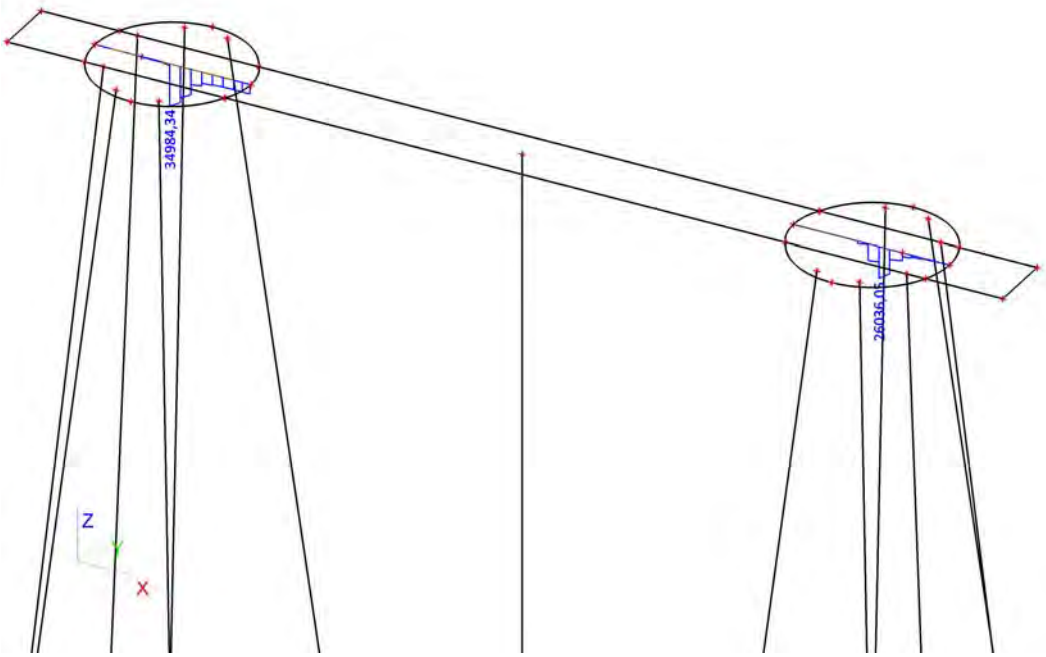

18. 2D element - Interne krachten; myD+

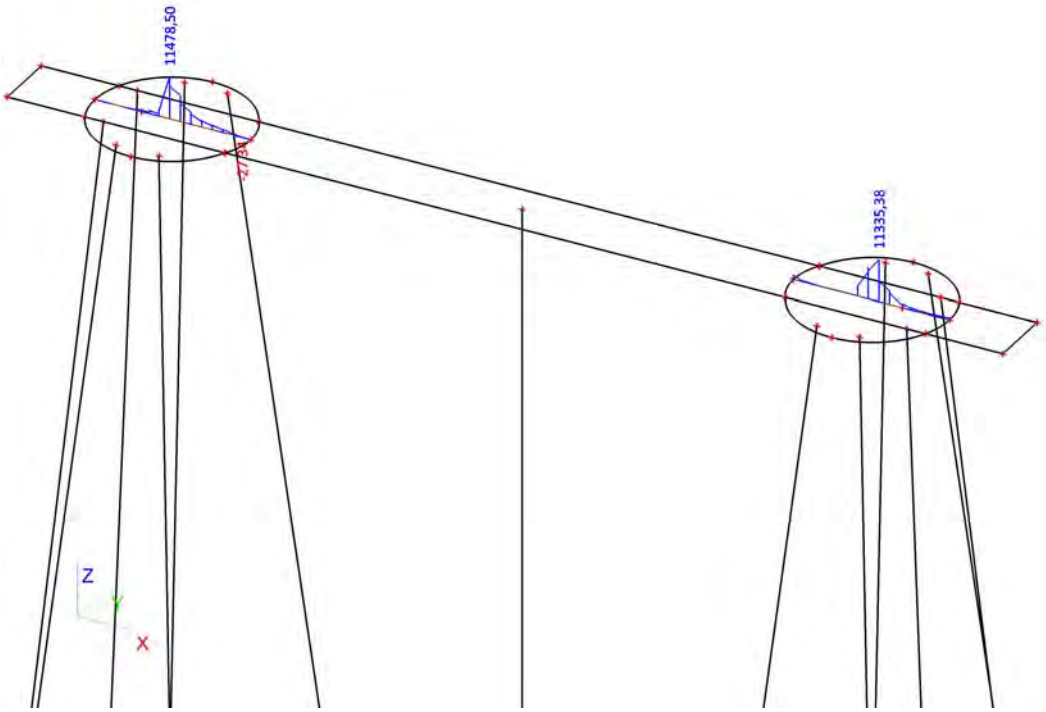

19. 2D element - Interne krachten; myD-

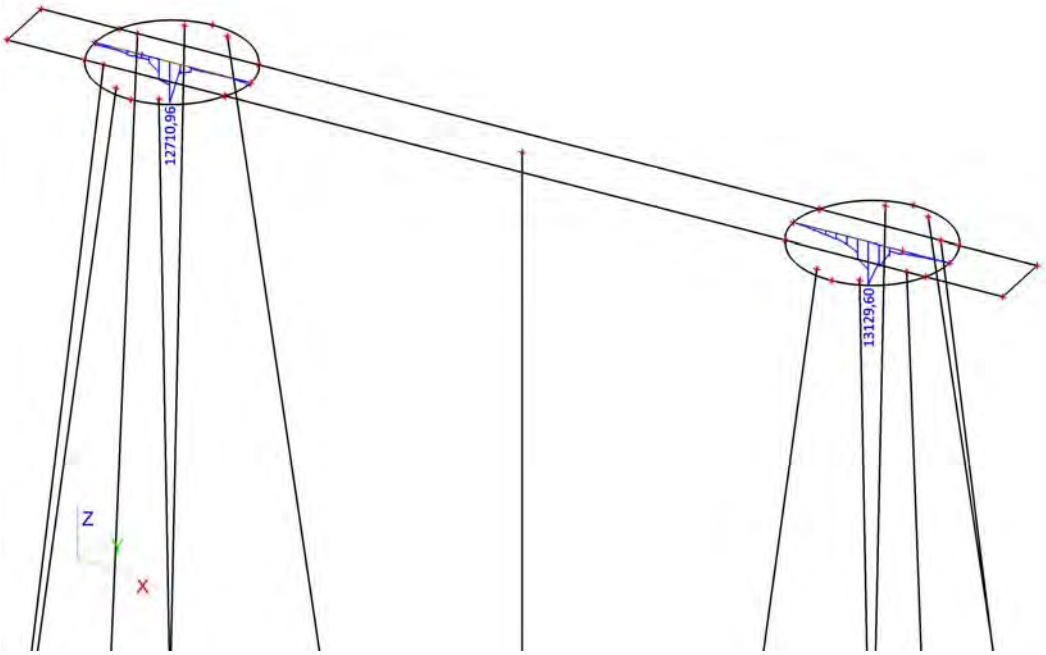

20. 2D element - Interne krachten; vx

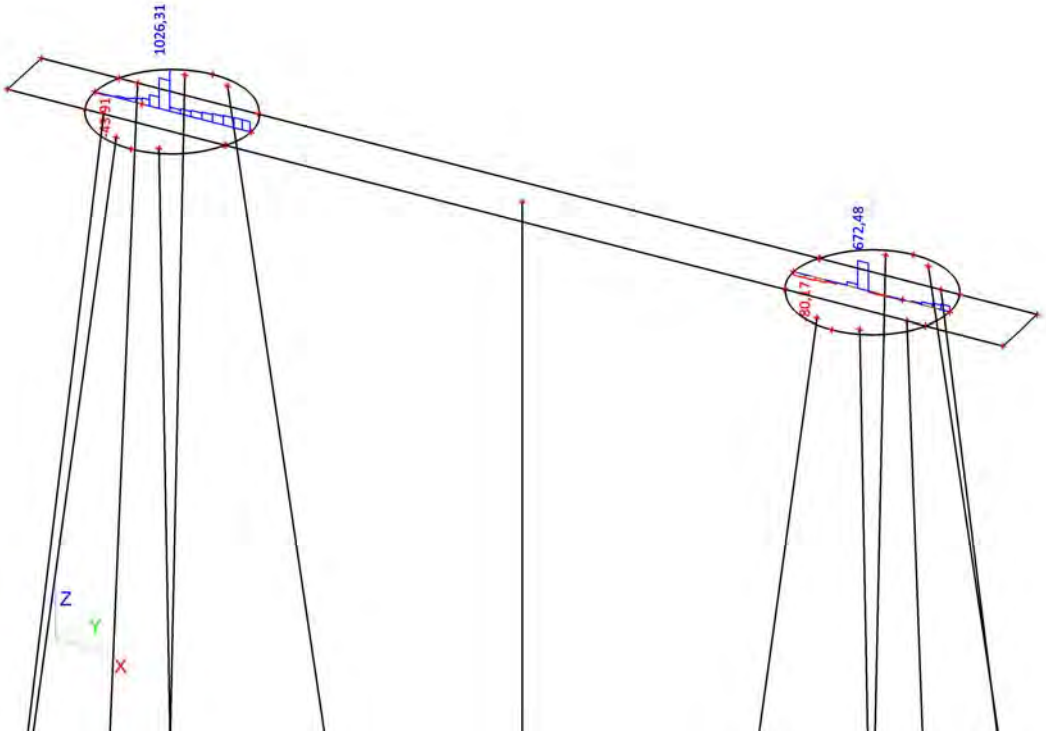

21. 2D element - Interne krachten; vy

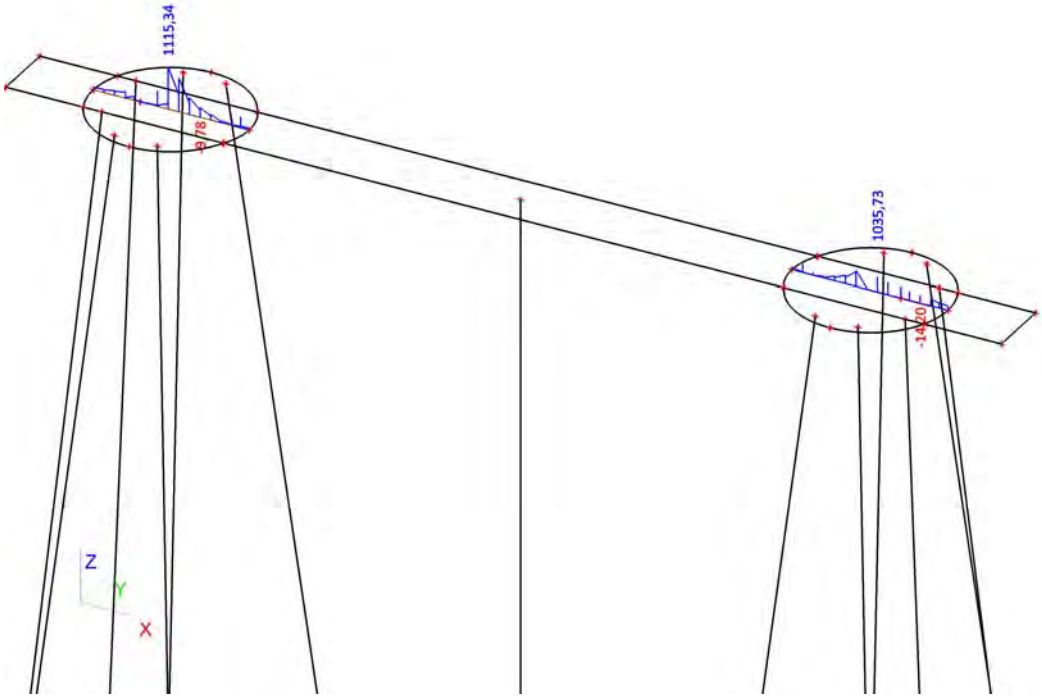

Constructieberekening mastfundatie type B

Project:
Randstad 380kV Noordring

Opdrachtgever:
TenneT TSO

Revisie	Datum	Wijzigingen ten opzichte van vorige revisie
00	19-07-2013	Eerste uitgave
01	06-08-2013	Definitief. Tweede uitgave
02	02-10-2013	T.b.v. 3e uitgave

Documentnummer: R3N-OWR-0004

Opsteller	*Controleur*	*Vrijgever*
A.L.A. van Noort Constructeur	P. de Jager Ontwerpmanager	Arjan Hogenboom Project Manager

Distributie

Naam	Bedrijf
Extern	
Guido Volman	TenneT TSO
Intern	
Arjan Hogenboom	BAM
Pieter de Jager	BAM
Eric van Rooijen	BAM
David van Loenen	BAM
Rob Bakker	BAM
Erwin ten Cate	BAM
Michael DeSmet	Fabricom
Hein Pijnappel	Mott MacDonald

Beheer

De documentbeheerder van de combinatie verzorgt de distributie. Alleen houders van een geregistreerde kopie ontvangen automatisch aanvullingen en/of wijzigingen. Het is de verantwoordelijkheid van de houders het document up to date te houden. De laatste versie is altijd beschikbaar in ThinkProject!

Indien documenten worden geprint, geldt het volgende: een geregistreerde kopie is geldig vanaf de datum van uitgifte. Bij uitgifte van een document met een hoger revisienummer verliest de voorgaande versie automatisch haar geldigheid. Kopiehouders dienen het voorblad van een ongeldige versie te markeren met een diagonale lijn samen met de tekst 'vervallen'.

Neem bij twijfel over de geldende versie contact op met de documentbeheerder.

Inhoudsopgave

1. Inleiding 4
1.1. Overzicht verschillende typen 4
1.1.1. Fundatietype A 5
1.1.2. Fundatietype B 5
1.1.3. Fundatietype C 6
1.1.4. Fundatietype D 6
1.1.5. Fundatietype F 7
1.2. Mastbeeld bij fundatie type B 8
1.3. Gerelateerde documenten 8
1.4. Openstaande punten 8
1.5. Revisiebeheer 9
2. Uitgangspunten en eisen 10
2.1. Uitgangspunten 10
2.2. Gehanteerde normen 10
2.3. Eisen 10
2.4. Vermoeiing 10
2.5. Materiaalgegevens 10
2.5.1. Betonkwaliteiten 10
2.5.2. Milieuklasse 11
2.5.3. Betondekking 11
2.6. Veerconstante funderingspalen 11
3. Berekening poer type B 13
3.1. Geometrie 13
3.2. Belastingen en belastingcombinaties 13
3.2.1. Belastingsfactoren 13
3.2.2. Belastingsgevallen 14
3.2.3. Belastingcombinaties 16
3.3. Wisselende belastingen en vermoeiing 17
4. Verbinding mast-fundering 20
4.1. Controle ronde opstort ..... **Fout! Bladwijzer niet gedefinieerd.**
4.2. Berekening fundering 20
5. Bijlagen 21
Bijlage 1 Uitvoer SCIA Engineer – lage E-waarde 22
Bijlage 2 Uitvoer SCIA Engineer – Matige-waarde 23

1. INLEIDING

De komende jaren werken het ministerie van Economische Zaken en TenneT aan de aanleg van een nieuwe 380 kV hoogspanningsverbinding in de Randstad. De nieuwe verbinding stelt de voorziening van elektriciteit in de Randstad veilig.

Het ontwerptracé van de nieuwe Randstad 380 kV verbinding is sinds eind 2008 bekend. De plannen gaan uit van twee ringen, tussen Wateringen en Zoetermeer (de Zuidring) en tussen Zoetermeer en Beverwijk (de Noordring). Eind 2012 heeft Tennet de aanbesteding opgestart voor het gedeelte van de Noordring tussen station Vijfhuizen en Bleiswijk. Het contract is opgedeeld in twee percelen, waarbij de grens ligt bij Zuidelijke Ringvaart. Dit document heeft betrekking op perceel 2 (het zuidelijke gedeelte).

BAM heeft op 8 juli 2013 het contract ondertekend met TenneT voor het ontwerp en realiseren van perceel 2. Het voorliggende document is onderdeel van het Definitief Ontwerp en behandelt de mastfundaties. Dit betreft ook de masten welke ter plaatse van een OSP zijn gelokaliseerd. De overige onderdelen van de OSP's zijn in een afzonderlijk document berekend evenals de funderingspalen.

Dit rapport betreft poer B . p poer B worden de volgende masttypen geplaatst W4S400Z + 5, W2S400 + 24, W2S400 + 24, W4S400Z + 14

De wapening wordt in het UO ontwerp uitgewerkt.

1.1. OVERZICHT VERSCHILLENDE TYPEN

Binnen het project komen verschillende typen masten voor.
De verschillen komen voort uit:

- aantal systemen dat een mastenpaar draagt, 2 systemen (2x380 kV) of 4 systemen (2x380 kV en 2x150 kV),
- de functie van de mast, Steunmast, Hoekmast of Eindmast,
- maximale veldlengte tussen masten 350 of 400 m,
- aanpassingen aan mast (b.v. +10 m extra hoogte).

Elke mast heeft een eigen belastingpatroon. Na analyse van de verschillende belastingen en geometrische eisen zijn er uiteindelijk 5 mastfundatie typen bepaal. Met deze 5 typen is er voor elke mast een geschikte fundatie beschikbaar.

De fundatietypen zijn hieronder weergegeven.

1.1.1. FUNDATIETYPE A

Toegepast bij masttype:
W2S400 + 5
W2S350 + 5
W2S400A+10

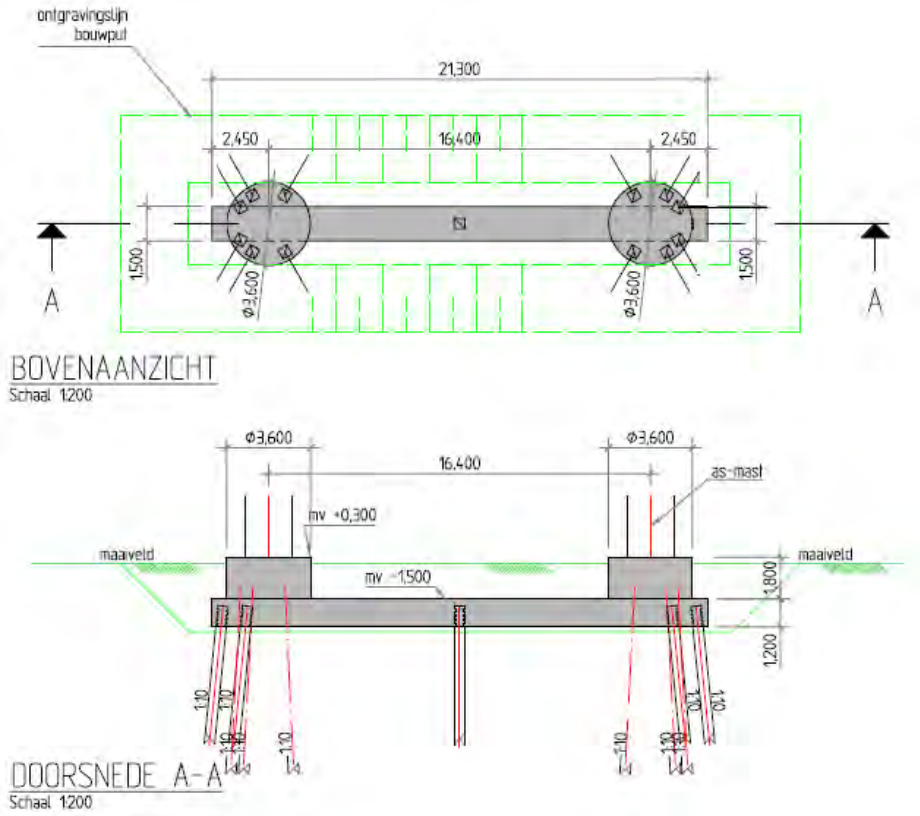

1.1.2. FUNDATIETYPE B

Toegepast bij masttype:
W4S400Z + 5
W2S400 + 24
W2S400 + 24
W4S400Z + 14

Opm: verschil met type A is diameter opstort.

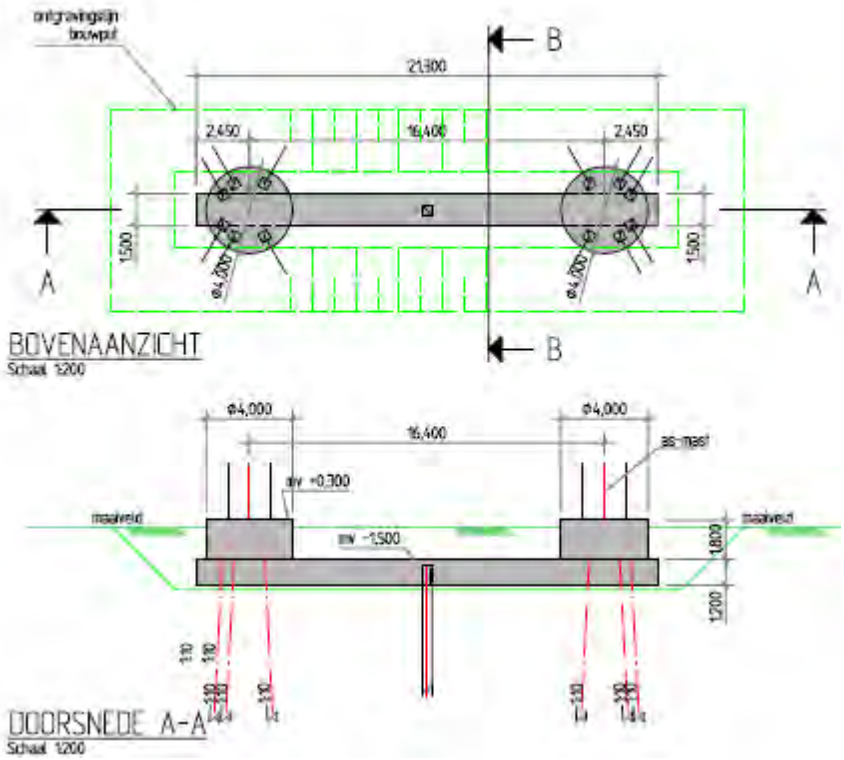

1.1.3. FUNDATIETYPE C

Toegepast bij masttype:
- W2H400 + 5
- W2H400 + 5
- W2H400 + 10
- W2H400 + 10 mast 133
- W2H400 + 15

Opm: mast 133 was in de oude nummering mast 82.

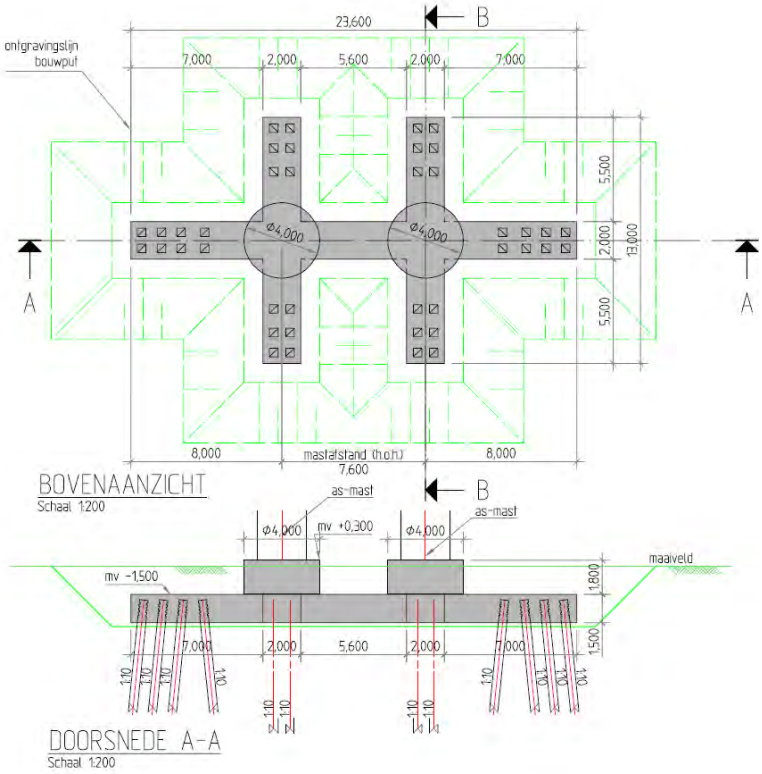

1.1.4. FUNDATIETYPE D

Toegepast bij masttype:
- W4H400Z + 5 (Afstap 150kV)
- W4H400Z +10 (Afstap 150kV)

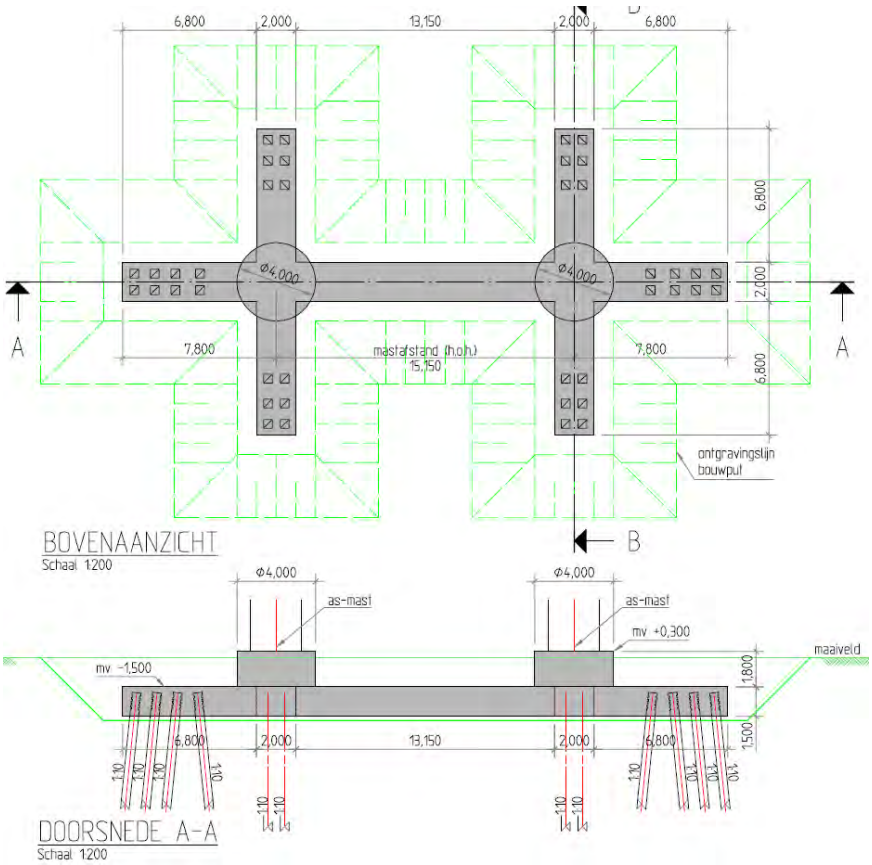

1.1.5. FUNDATIETYPE F

Toegepast bij masttype:
- W2E350 + 5
- W2E400
- W2E350

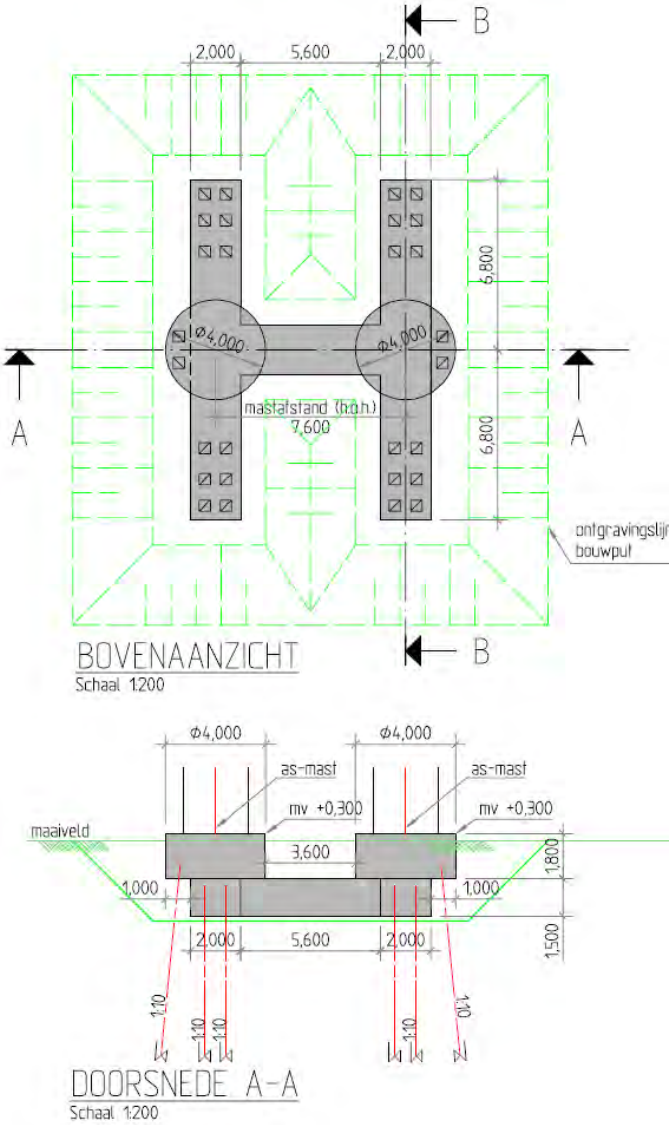

1.2. MASTBEELD BIJ FUNDATIE TYPE B

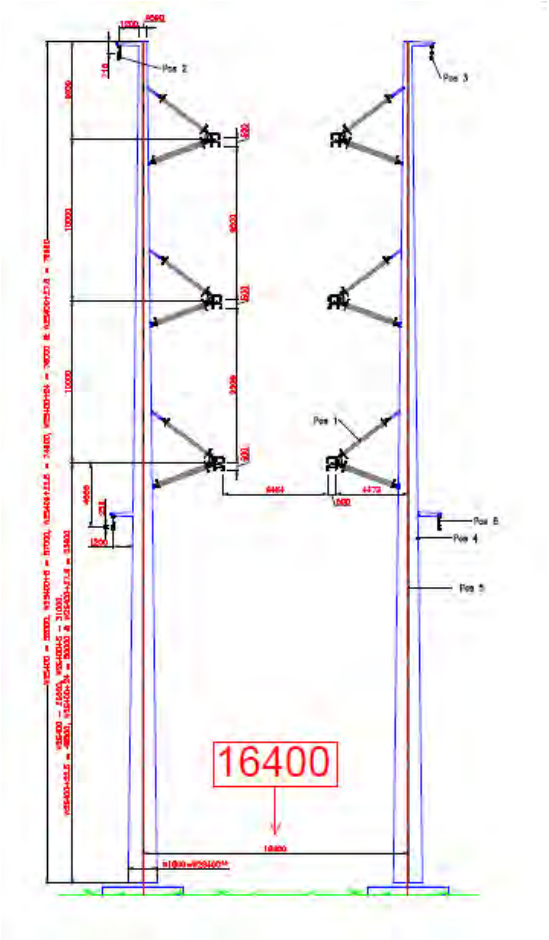

1.3. GERELATEERDE DOCUMENTEN

R3N-OWN-0001 Ontwerpnota Systeem Noordring
R3N-OWR-0003 Constructieberekening mastfundaties type A
R3N-OWR-0004 Constructieberekening mastfundaties type B
R3N-OWR-0005 Constructieberekening mastfundaties type C
R3N-OWR-0006 Constructieberekening mastfundaties type D
R3N-OWR-0007 Constructieberekening mastfundaties type F
R3N-OWR-0008 Ontwerpberekening paalfundering mastfundaties
R3N-OWR-0033 Bepaling belastingen mastfundaties
R3N-OWR-0039 Bemalingsadvies beheersgebied Rijnland
R3N-OWR-0040 Bemalingsadvies beheersgebied Schieland en de Krimpenerwaard

1.4. OPENSTAANDE PUNTEN

De volgende punten dienen in een latere fase nader uitgewerkt te worden:

- Aarding
- Temperatuursinvloeden op fundering
- Model verbetyeren d.m.v. dummy elementen aan bovenzijde palen
- Invloed krimp op fundering
- Optimalisatie wapening
- Optimalisatie palen
- Detailontwerp prefab beton

1.5. REVISIEBEHEER

Dit is de tweede uitgave. Er zijn nog vrijwel geen grondgegevens beschikbaar. Daarom is dit document voornamelijk bedoeld als ‘proof of concept’.

Aangepast in 3e uitgave
Dit is de 3e uitgave. In deze revisie is toegevoegd:

- Mastbeeld toegevoegd,
- Nadere uitwerking milieuklasse
- Masttype W2H400 + 15 was in het overzicht zowel bij poer type C als D genoemd. Mast komt op type C.
- Masttype W2S400A+10 ontbrak in het overzicht. Toegevoegd bij poertype A
- Toelichting koppeling mast met fundatie

2. UITGANGSPUNTEN EN EISEN

2.1. UITGANGSPUNTEN

Op de funderingen worden de lasten geplaatst zoals afgeleid in document R3N-OWR-0033 'Bepaling belasting mastfundaties'. Deze zijn afgeleid van de mastberekeningen zoals door TenneT beschikbaar gesteld.

2.2. GEHANTEERDE NORMEN

De eurocode serie NEN-EN-1990 tm 1997 wordt gehanteerd

NEN-EN50341

2.3. EISEN

De eisen zoals vermeld in ontwerpnota R3N-OWN-0001 §3 zijn gehanteerd bij het ontwerp.
Voor de masten gelden specifiek onderstaande eisen:

- De fundamenten van de staalconstructies ten behoeve van de masten worden gedimensioneerd op een maximale vervorming van 0.005 RAD onder representatieve waarden van de belastingen,
- Tot 1,5 m diepte mag de straalomtrek van de fundering niet groter zijn dan 1,0 m meer dan de straal van de mast,
- De ZRO-breedte tussen de (schoor)paalpunten en andere ondergrondse constructies van de masten is maximaal 2x 22 m voor de 2x 380kV (solo) verbinding en 2 x 27 m voor de 2 x 150 kV/380 kV (combi) verbinding.
- Tolerantie van mastlocatie naar buiten is 10 cm, tolerantie naar binnen is 0 cm.

2.4. VERMOEIING

De aan te leggen fundamenten worden gedimensioneerd op een vermoeiingsbelasting. De wisseling van belasting komt uit wind. Het aantal en de grote van de wisselingen gedurende 50 jaar is bepaald conform de ROK. De toetsingsprocedure van de constructie conform NEN-EN 1992-1-1:2005.

2.5. MATERIAALGEGEVENS

In onderstaande paragrafen worden de gehanteerde materiaaleigenschappen benoemd.

2.5.1. BETONKWALITEITEN

Voor het constructief beton worden bij de detaillering de volgende sterkteklassen aangehouden. De betonkwaliteit van de ronde opstort (C35/45) is voorgeschreven. Bij gescheurd beton wordt in eerste instantie gerekend met $E_{beton;gescheurd} \approx 1/3\ E_{beton;ongescheurd}$. Tevens is een ca. 2 x zo hoge E-modulus beschouwd.

Onderdeel	Sterkteklasse	Elastisciteitsmodulus [N/mm²]		
		ongescheurd	Gescheurd lage E	Gescheurd matige E
in het werk gestort gewapend beton:	C30/37	31.000	11.000	22.000
in het werk gestort gewapend beton, ronde opstort	C35/45	33.500		
geprefabriceerd beton (U-bakken):	C35/45	33.500		
geprefabriceerd voorgespannen beton (palen):	C45/55	36.000		

Tabel 2.5.1-1 Betonkwaliteiten

2.5.2. MILIEUKLASSE

Voor de betondelen welke meer dan 1,0 m onder maaiveld liggen geldt milieuklasse XC2
Voor de hoger gelegen betondelen is de milieuklasse afhankelijk van de aanwezigheid van openbare wegen. De wegen naar de OSP's zullen niet gestrooid worden en bovendien nauwelijks bereden worden, waardoor het wegspatten van water met dooizouten niet aan de orde is. De afstanden in onderstaande schets geldt voor snelwegen, bij ander wegen zou deze eventueel kleiner kunnen.

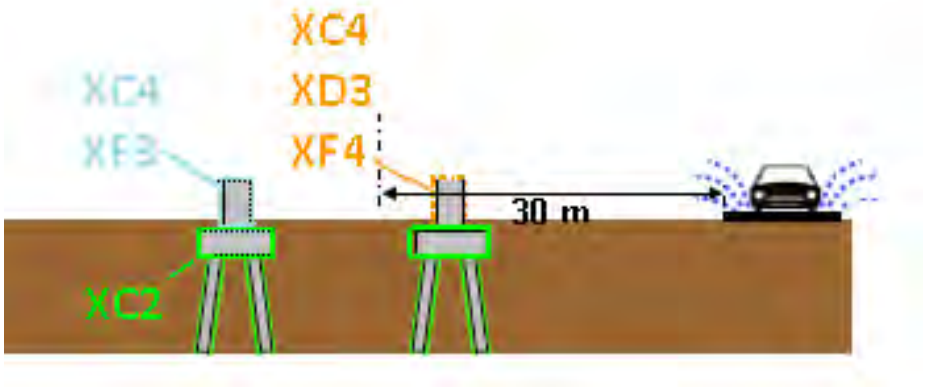

2.5.3. BETONDEKKING

Betondekking conform NEN EN 1992-1-1:2011

$$c_{min} = \max\{c_{min,b};\ c_{min,dur} + \Delta c_{dur,\gamma} - \Delta c_{dur,st} - \Delta c_{dur,add};\ 10\ mm\} \qquad (4.2)$$

waarin:

$c_{min,b}$	is de minimumdekking op basis van de aanhechtingseisen, zie 4.4.1.2 (3);
$c_{min,dur}$	is de minimumdekking op basis van de milieu-omstandigheden, zie 4.4.1.2 (5);
$\Delta c_{dur,\gamma}$	is een aanvullende veiligheidsmarge, zie 4.4.1.2 (6);
$\Delta c_{dur,st}$	is een reductie van de minimumdekking bij gebruik van roestvast staal, zie 4.4.1.2 (7);
$\Delta c_{dur,add}$	is een reductie van de minimumdekking bij gebruik van aanvullende bescherming, zie 4.4.1.2 (8).

De verwachting is dat $c_{min;b}$ maatgevend wordt. Deze warade is afhankelijk van de staafdiameter, welk enog niet bekend is. Betondekking wordt in UO bepaald.Staalkwaliteiten
Voor het wapeningsstaal worden de volgende staalkwaliteiten aangehouden:

Omschrijving	Kwaliteit
betonstaal (staven)	B500 B
betonstaal (gepuntlaste wapeningsnetten):	B500 B

Tabel 2.5.2 Staalkwaliteiten

2.6. VEERCONSTANTE FUNDERINGSPALEN

De constructie wordt gefundeerd op prefab betonpalen. De palen worden horizontaal gesteund door de grond wat resulteert in een horizontale beddingconstante op de funderingspaal. Verticaal wordt de funderingspaal gesteund door een verticale puntveer. Beide veerconstanten zijn bepaald door de geotechnische adviseur in rapport R3N-OWR-0008.

In het model wordt gerekend met een verticale veerstijfheid van 120.000 kN/m.
Voor de horizontale bedding worden onderstaande waarden aangehouden.

Bij de palen voor funderingstype A staan er geen palen in elkaars schaduw. De factor voor groepswerking is daarom niet aanwezig. De groepswerking reduceerde de stijfheid in rapport R3N-OWR-0008 tot resp 39% in Y richting en 54 % in X richting.
Zonder groepswerking zijn de waarden dus aanzienlijk hoger. Pas een factor van 1,5 op de gegeven horizontale bedding in X-richting toe voor de palen bij fundatietype A. Hiermee is er nog steeds een reductie tot 81% van de bedding van een vrijstaande paal.

In de volgende tabel wordt de gehanteerde bedding constanten gepresenteerd. Er wordt alleen met de lage veerstijfheid gerekend, omdat deze resulteert in de grootste vervormingen.

X-richting		Voor ESA berekeningen			
soort	b.k. laag			per m'paal	
	[m+ NAP]			$k_{h,rep,laag}$ [kN/m/m]	
Veen	-1.6			1,050	
Klei	-2.7			450	
Veen	-5.1			1,050	
Klei	-6.0			600	
Veen	-11.2			1,050	
Zand	-12.1			10,35	
Zand	-22.0			12,45	

Figuur 3 Horizontale beddingsconstanten per belastingsrichting

3. BEREKENING POER TYPE B

3.1. GEOMETRIE

De geometrie van de type B poeren is als volgt:

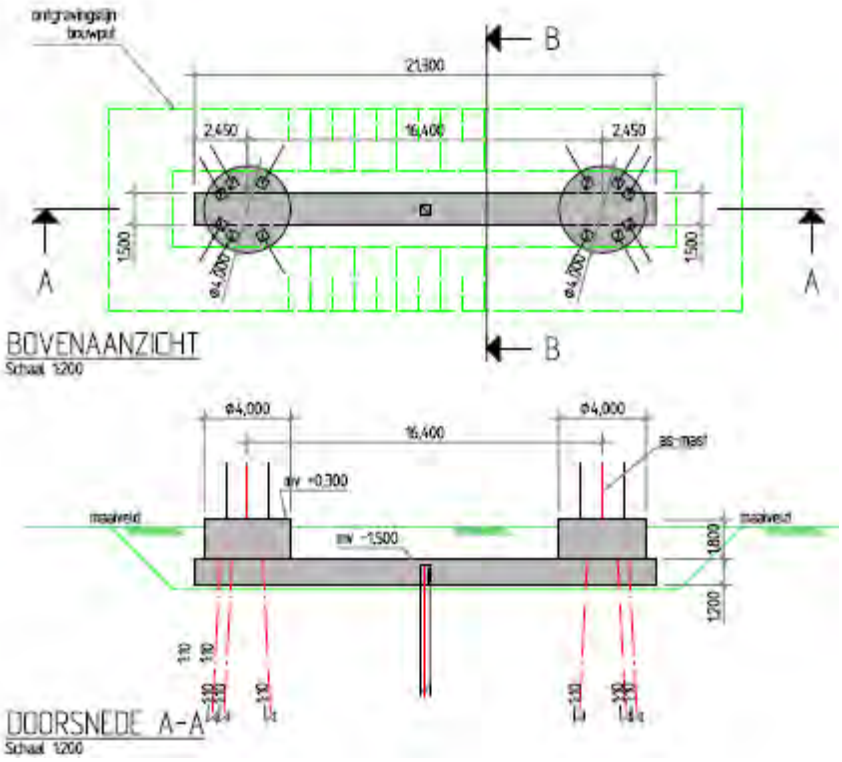

3.2. BELASTINGEN EN BELASTINGCOMBINATIES

3.2.1. BELASTINGSFACTOREN

De belasting uit de poeren bestaat vooral uit lasten uit de mast cq lijnen. Deze lasten zijn, incl. partiële factoren gegeven door de opdrachtgever op basis van een rapport van KEMA.

Daarnaast zijn er lasten op de poeren zelf. Hiervoor geldt dat vergelijking 6.10 b van de EN 1990 maatgevend is. Gecombineerd met CC3 gelden de volgende partiële factoren:

γ_G (ongunstig)	=	1,3	
γ_G (gunstig)	=	0,9	(zie §3.2.2, op eigen gewicht fundering wordt factor 0,54 toegepast)
γ_Q	=	1,65	

Opm: De meeste lasten zijn door de klant incl de factoren gegeven. Bovenstaande factoren hebben dus alleen invloed op het eigen gewicht, grond en belastingen op maaiveld.

3.2.2. BELASTINGSGEVALLEN

Eigen gewichtpoer
Eigen gewicht van de betonconstructie wordt gegenereerd in het model. Er wordt gerekend met een eigengewicht voor beton van 2500 kg/m$^{3.}$

Omdat er ook trek op de palen komt, is eigen gewicht al snel een gunstige belasting (druk eenvoudiger op te nemen dan trek).Indien de poer zich onderwater bevindt zal er een opwaartse kracht gelijk aan het gewicht van het verplaatste water op de poer aanwezig zijn. Het effectieve gewicht van de poer reduceert hierdoor tot 1500 kg/m^3. Inclusief partiële factor van 0,9 volgt 1350 kg/m^3. In totaal bedraagt de factor dan dus 1350/2500 = 0,54.

Eigen gewicht grond op poer
Op de poer ligt 1,5 m grond. Indien het grondwater lager ligt, is de last:
1,5 * 17 = 25,5 kN/m^2

Bij waterstand gelijk aan 0,5m onder maaiveld niveau is de last:
0,5 * 17 + 1,0 * (17-10) = 15,5 kN/m^2

Inclusief partiële factor van 0,9 volgt 13,95 kN/m^2. In totaal bedraagt de factor dan dus 13,95/25,5 = 0,54. Reken met droge grond en pas een partiële factor van 0,54 op eigen gewicht poer en grond toe in het geval deze gunstig werken.

Belastingen uit de mast
Zie rapport 'Afleiding belasting uit masten'.

Er wordt gerekend met de volgende, donker aangegeven ULS en SLS lasten uit het rapport. De overige lasten zijn met deze gevallen afgedekt.

Voor het variabele deel dat zijn oorsprong vindt in wind, wordt gerekend met:

ψ_0	ψ_1	ψ_2
0,6	0,2	0

ULS

Mast	Wind	Loadcase	M_{langs}	M_{dwars}	N	V_{langs}	V_{dwars}
W4S400Z+5	0 deg	1a	2857	2634	600	102	54
W4S400Z+5	0 deg	3	804	4607	746	29	94
W4S400Z+5	90 deg	1a	0	17967	592	0	463
W4S400Z+5	0 deg	1a	2857	2069	561	102	43
W2S400+24	0 deg	1a	5841	547	921	163	0
W2S400+24	0 deg	3	1643	1036	1075	46	0
W2S400+24	90 deg	1a	0	19609	892	0	383
W2S400+24	0 deg	1a	5841	417	693	163	0
W2S400+22.5	0 deg	1a	5508	1538	878	157	18
W2S400+22.5	0 deg	3	1549	2784	1019	44	31
W2S400+22.5	90 deg	1a	0	21005	859	0	412
W2S400+22.5	0 deg	1a	5508	1201	659	157	14
W4S400Z+14	0 deg	1a	4319	443	777	136	0
W4S400Z+14	0 deg	3	1215	897	944	38	0
W4S400Z+14	90 deg	1a	0	18317	752	0	385
W4S400Z+14	0 deg	1a	4319	284	732	136	0

SLS

Type	Wind	Loadcase	M_{langs}	M_{dwars}	N	V_{langs}	V_{dwars}
W4S400Z+5	0 deg	3	1905	5592	599	68	144
W4S400Z+5	90 deg	1a	1905	12556	494	68	321
W2S400+24	0 deg	1a	3894	4355	769	109	109
W2S400+24	0 deg	3	3894	4689	874	109	109
W2S400+24	90 deg	1a	3894	13158	748	109	255
W2S400+22.5	0 deg	3	3672	5880	828	105	130
W2S400+22.5	45 deg	1a	4314	9532	726	116	197
W2S400+22.5	90 deg	1a	3672	14266	718	105	278
W4S400Z+14	0 deg	3	2879	3560	763	91	91
W4S400Z+14	90 deg	1a	2879	12281	631	91	257

Belastingen op maaiveld
Op het maaiveld wordt gerekend met een verdeelde last van 10 kN/m^2 . Er is geen stempellast op de fundering voorzien. Echter, door spreiding van een puntlast over een diepte van 1,5 m, zal een lastvlak van 2 (breedte balk) x 3 (2*1,5) = 6 m^2 ontstaan, waardoor bij 10 kN/m^2 dus ook een puntlast van 60 kN toelaatbaar is.

Voor deze belastingen wordt in de combinatie gerekend met:

ψ_0	ψ_1	ψ_2
0,7	0,5	0,3

3.2.3. BELASTINGCOMBINATIES

Belastingcombinaties in ULS conform vergelijking 6.10b van NEN EN 1990, waarbij:
0,7 * 1,65 = 1,16

En de belastingsfactoren voor de last uit de masten reeds in de ingevoerde belasting is meegenomen (factor 1,0 toegepast)

ULS							
Belastinggeval	Omschrijving	Combi 1	Combi 2	Combi 3	Combi 4	Combi 5	Combi6
1	Eigen gewicht	1,3	1,3	1,3	1,3	0,54	0,54
2	Grond	1,3	1,3	1,3	1,3	0,54	0,54
3	Belasting mast ULS 1	1,0		0,6		1,0	
4	Belasting mast ULS 2		1,0		0,6		1,0
7	Belasting op maaiveld	1,16	1,16	1,65	1,65		

SLS							
Belastinggeval	Omschrijving	Combi 7	Combi 8	Combi 9	Comb i 10	Combi 11	Combi 12
5	Eigen gewicht	1,0	1,0	1,0	1,0	0,6	0,6
6	Grond	1,0	1,0	1,0	1,0	0,6	0,6
5	Belasting mast SLS 1	1,0		0,6		1,0	
6	Belasting mast SLS 2		1,0		0,6		1,0
7	Belasting op maaiveld	0,7	0,7	1,0	1,0		

3.3. WISSELENDE BELASTINGEN EN VERMOEIING

Door de wisselende belastingen van wind dient belasting door vermoeiing te worden meegenomen. Bij vermoeiing is het aantal wisselingen en de grootte van de wisseling van belang. In de NEN-EN 1991-1-4:2005 is in bijlage B.3 een figuur opgenomen waarin de verhouding tussen de grootte van de windlast en het aantal keren dat deze optreedt weergegeven.

B.3 Aantal belastingen voor dynamische respons

(1) Figuur B.3 geeft het aantal keren N_g dat de waarden ΔS van een windeffect worden bereikt of overschreden gedurende een periode van 50 jaar. ΔS wordt uitgedrukt in percentage van de waarde S_k, waar S_k het effect is van een windbelasting met een herhalingstijd van 50 jaar.

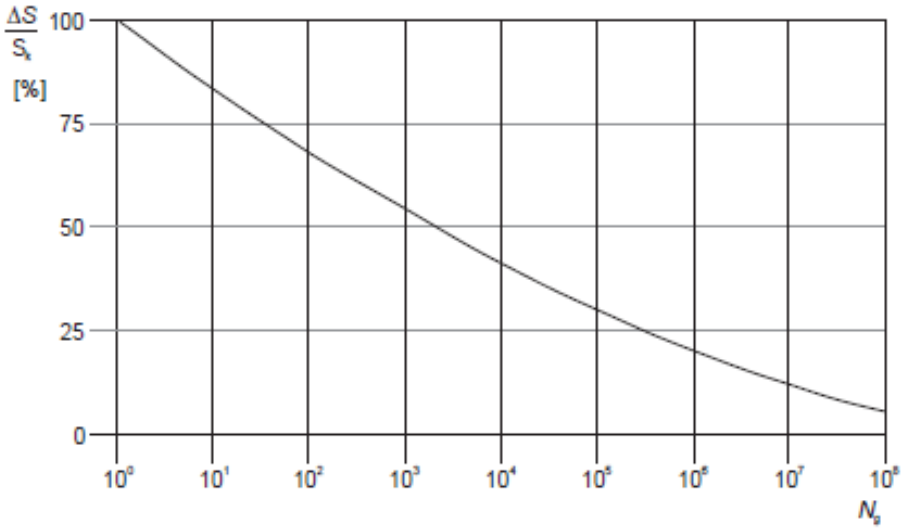

Figuur B.3 — Aantal windvlaagbelastingen N_g voor een effect $\Delta S/S_k$ gedurende een herhalingstijd van 50 jaar

De relatie wordt omschreven met de volgende uitdrukking

$$\frac{\Delta S}{S_k} = 0{,}7 \cdot (\log(N_g))^2 - 17{,}4 \cdot \log(N_g) + 100 \qquad \text{(B.9)}$$

Bij vermoeiing wordt bij een bepaald spanningsniveau het aantal wisselingen op dit spanningsniveau bepaald en vervolgens wordt dit vergeleken met het aantal toelaatbare wisselingen op dat spanningsniveau. Door dit voor de voorkomende spanningsniveaus te doen is de weerstand tegen vermoeiing te controleren.

In de ROK van RWS is bovenstaande verdeling gediscretiseerd tot onderstaande tabel:

Tabel 5-1: Aantal wisselingen per windbelasting (referentieperiode 50 jaar)

ΔS / Sk (%)	n
100	1
98	1
90	8
75	90
61	900
48	9000
36	90000
25	900000
16	9000000
9	90000000

Van beton en wapeningsstaal is bekend hoeveel wisselingen bij een bepaald spanningsniveau toelaatbaar zijn. S_K is de spanning met een herhalingstijd van 50 jaar (de spanning waarop de constructie ontworpen is).

Met bovenstaande gegevens is te bepalen welke maximale spanning t.g.v. wind eens in de 50 jaar toelaatbaar is opdat de constructie ook voldoende weerstand tegen vermoeiing heeft.

Wapening
De totale schade van de belastingen dient volgens de beschadigingsregel van Miner kleiner dan 1 te zijn.
De toetsingsprocedure per wisseling conform NEN-EN 1992-1-1:2005, §6.8.4:
Voor de wapening is gekeken naar de toelaatbare spanning voor:

- Rechte staven
- Staven gebogen met een doordiameter 2,5*D
- Gelaste staven

Er volgt (zie berekening hieronder) dat voor gewone rechte staven er geen beperking is, echter gebogen of gelaste staven hebben de volgende spanningsbeperking

Buigdoorn 2,5ø → 244 N/mm^2
Buigdoorn 5ø → 283 N/mm^2
Gelaste staven → 317 N/mm^2

Omdat bij de toetsing van vermoeiing een ULS toestand met veiligheid 1,0 wordt getoetst, is de spanning altijd minimaal een factor van ca. 1,3 lager dan de normale ULS toestanden.

Bij een toelaatbare spanning van 435 N/mm^2 in ULS volgt bij toetsing op vermoeiing een spanning van maximaal 335 N/mm^2. De toelaatbare spanningen bij vermoeiing zijn nog iets lager. Hier dient in de detaillering rekening mee gehouden te worden. Een toetsing achteraf zal volstaan.

Rechte staven

maximale gebruiksspanning			435	
Toelaatbare spanningswisseling bij N* wisselingen			162,5	
		k1	5	
		k2	9	
		N*	1,00E+06	
	ROK	Wisseling spanning	Toelaatbaar aantal	
aantal wisselingen	dS/S	wapening	wisselingen	Schade
[-]	[-]	[N/mm2]	[-]	[-]
1	100	435	7275	0,000137
1	98	426	8048	0,000124
8	90	392	12320	0,000649
90	75	326	30656	0,002936
900	61	265	86133	0,010449
9000	48	209	285505	0,031523
90000	36	157	1394937	0,064519
900000	25	109	37137862	0,024234
9000000	16	70	2061565470	0,004366
90000000	9	39	365674259232	0,000246
			Totale schade	**0,139183665**

Staven gebogen met doorndiameter 2,5*D

maximale gebruiksspanning			244	
Toelaatbare spanningswisseling bij N* wisselingen			67,4	
		k1	5	
		k2	9	
		N*	1,00E+06	

aantal wisselingen [-]	ROK dS/S [-]	Wisseling spanning wapening [N/mm2]	Toelaatbaar aantal wisselingen [-]	Schade [-]
1	100	244	1613	0,000620
1	98	239	1784	0,000560
8	90	220	2731	0,002929
90	75	183	6796	0,013243
900	61	149	19095	0,047134
9000	48	117	63292	0,142197
90000	36	88	266714	0,337440
900000	25	61	2466861	0,364836
9000000	16	39	136938283	0,065723
90000000	9	22	24289699180	0,003705
			Totale schade	**0,978388484**

Staven gebogen met doorndiameter 5*D

maximale gebruiksspanning			283	
Toelaatbare spanningswisseling bij N* wisselingen			78,0	
		k1	5	
		k2	9	
		N*	1,00E+06	

aantal wisselingen [-]	ROK dS/S [-]	Wisseling spanning wapening [N/mm2]	Toelaatbaar aantal wisselingen [-]	Schade [-]
1	100	283	1591	0,000629
1	98	277	1760	0,000568
8	90	255	2694	0,002970
90	75	212	6702	0,013428
900	61	173	18832	0,047792
9000	48	136	62422	0,144181
90000	36	102	263044	0,342148
900000	25	71	2406099	0,374050
9000000	16	45	133565305	0,067383
90000000	9	25	23691410595	0,003799
			Totale schade	**0,996946687**

Gelaste staven

maximale gebruiksspanning			317	
Toelaatbare spanningswisseling bij N* wisselingen			58,5	
		k1	3	
		k2	5	
		N*	1,00E+07	

aantal wisselingen [-]	ROK dS/S [-]	Wisseling spanning wapening [N/mm2]	Toelaatbaar aantal wisselingen [-]	Schade [-]
1	100	317	62848	0,000016
1	98	311	66775	0,000015
8	90	285	86211	0,000093
90	75	238	148972	0,000604
900	61	193	276886	0,003250
9000	48	152	568285	0,015837
90000	36	114	1347046	0,066813
900000	25	79	4022257	0,223755
9000000	16	51	20411885	0,440920
90000000	9	29	362468668	0,248297
			Totale schade	**0,999600179**

4. VERBINDING MAST-FUNDERING

De masten worden verbonden met de fundering d.m.v. een ingestorte ankerkooi. Een ankerkooi is hieronder weergegeven

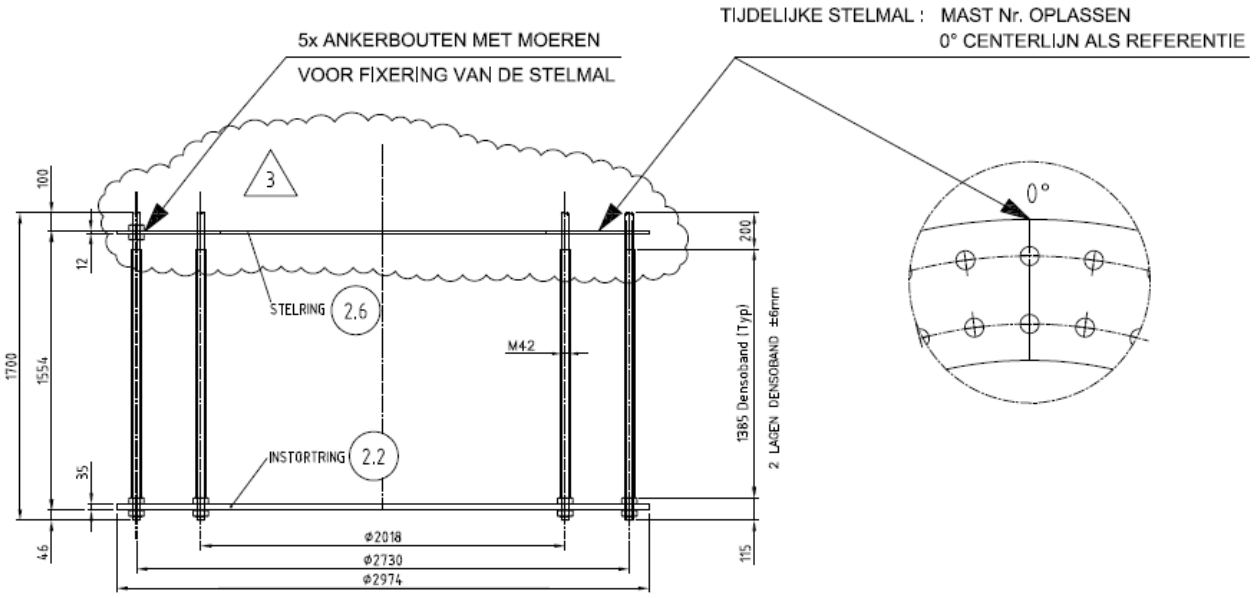

DETAIL VERANKERING

NOTA : ALLE RESTERENDE MOEREN EN ONDERLEGRINGEN WORDEN LOS MEEGELEVERD

Prepared by: LV Revision: 3 Date: 5-7-2011	Material: – Quantity: 2 Equipm. no.: W4E350	**VDL KTI**	Project No.: 36002 Workprep. No.: Pos. No.: ANKERKOOI

De ankers en platen zijn berekend door Volker Infra Design bij het ontwerp van de masten. De ankerkooi bevindt zich in de ronde opstort. De ronde opstort is d.m.v. stekken verbonden met de kruisvormige balken. De stekken worden in de UO fase berekend.

4.1. BEREKENING FUNDERING

De poer is ingevoerd in een SCIA engineer model.

Er zijn 2 modellen gedraaid:

Model 1: Lage gescheurde E modulus
Model 2: Matige gescheurde E modulus

5. BIJLAGEN

Bijlage 1 Uitvoer SCIA Engineer – lage E-waarde
Bijlage 2 Uitvoer SCIA Engineer – matige E-waarde

BIJLAGE 1 UITVOER SCIA ENGINEER – LAGE E-WAARDE

1. Inhoudsopgave

1. Inhoudsopgave	1
2. Overzicht	2
3. Materialen	2
4. Doorsneden	2
5. Knoop	3
6. 1D-staaf	3
7. 2D-element	3
8. Subregio	3
9. Knoopondersteuningen	4
10. Lijnondersteuning op staaf	4
11. Belastingsgevallen	6
11.1. Belastingsgevallen - BG1	6
11.1.1. Belasting grafisch	6
11.2. Belastingsgevallen - BG3	6
11.2.1. Vrije puntmomenten	7
11.2.2. Genereer vrije lasten	7
11.2.3. Belasting grafisch	8
11.3. Belastingsgevallen - BG2	8
11.3.1. Lasten op oppervlak	8
11.3.2. Belasting grafisch	9
11.4. Belastingsgevallen - BG4	9
11.4.1. Vrije puntmomenten	9
11.4.2. Genereer vrije lasten	9
11.4.3. Belasting grafisch	10
11.5. Belastingsgevallen - BG5	10
11.5.1. Vrije puntmomenten	10
11.5.2. Genereer vrije lasten	11
11.5.3. Belasting grafisch	11
11.6. Belastingsgevallen - BG6	12
11.6.1. Vrije puntmomenten	12
11.6.2. Genereer vrije lasten	12
11.6.3. Belasting grafisch	12
11.7. Belastingsgevallen - BG7	13
11.7.1. Lasten op oppervlak	13
11.7.2. Belasting grafisch	13
12. Combinaties	13
13. Verplaatsing van knopen SLS 1	14
14. Reacties	14
15. 2D element - Interne krachten; mxD+	15
16. 2D element - Interne krachten; mxD-	15
17. 2D element - Interne krachten; myD+	16
18. 2D element - Interne krachten; myD-	16
19. 2D element - Interne krachten; vx	17
20. 2D element - Interne krachten; vy	17

2. Overzicht

3. Materialen

Naam	Type	Massa eenheid [kg/m³]	E-mod [MPa]	Poisson - nu	G-mod [MPa]	Thermisch uitz. [m/mK]	Karakteristieke cylinderdruksterkte fck(28) [MPa]
C30/37	Beton	2500,0	1,1000e+04	0,2	4,5833e+03	0,00	30,00
C35/45	Beton	2500,0	3,4100e+04	0,2	1,4208e+04	0,00	35,00

4. Doorsneden

Naam	CS1	
Type	Rechthoek	
Uitgebreid	450; 450	
Onderdeelmateriaal	C35/45	
Bouwwijze	Algemeen	
Knik y-y, z-z	b	b
EEM berekening	×	

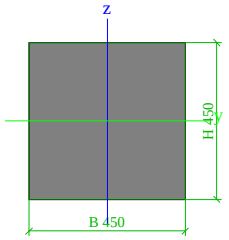

A [m²]	2,0250e-01	
A y, z [m²]	1,6875e-01	1,6875e-01
I y, z [m⁴]	3,4172e-03	3,4172e-03
I w [m⁶], t [m⁴]	0,0000e+00	5,7655e-03
Wel y, z [m³]	1,5188e-02	1,5188e-02
Wpl y, z [m³]	2,2781e-02	2,2781e-02
d y, z [mm]	0	0
c YLCS, ZLCS [mm]	225	225
alpha [deg]	0,00	
AL [m²/m]	1,8000e+00	

5. Knoop

Naam	Coördinaat X [m]	Coördinaat Y [m]	Coördinaat Z [m]
K47	0,400	0,750	0,000
K51	10,650	0,750	0,000
K52	10,650	0,750	-19,000
K81	0,100	-3,212	-19,000
K86	1,650	-0,662	0,000
K92	0,100	4,712	-19,000
K94	1,650	2,162	0,000
K143	0,000	0,000	0,000
K144	0,814	0,000	0,000
K145	4,086	0,000	0,000
K146	2,450	-1,050	0,000
K147	17,214	0,000	0,000
K148	20,486	0,000	0,000
K149	18,850	-1,050	0,000
K150	21,300	0,000	0,000
K151	21,300	1,500	0,000
K152	20,486	1,500	0,000
K153	17,214	1,500	0,000
K154	18,850	2,550	0,000
K155	4,086	1,500	0,000
K156	0,814	1,500	0,000
K157	2,450	2,550	0,000
K158	0,000	1,500	0,000
K159	0,650	0,750	0,000
K160	4,100	0,000	0,000
K161	4,100	1,500	0,000
K162	4,300	0,750	0,000
K163	17,200	1,500	0,000
K164	17,200	0,000	0,000
K165	17,000	0,750	0,000
K166	20,650	0,750	0,000
K167	1,450	0,750	0,000
K169	3,250	-0,662	0,000
K170	4,800	-3,212	-19,000
K171	3,250	2,162	0,000
K172	4,800	4,712	-19,000
K173	16,500	-3,212	-19,000
K174	16,500	4,712	-19,000
K175	21,200	-3,212	-19,000
K176	21,200	4,712	-19,000
K177	18,050	-0,662	0,000
K178	18,050	2,162	0,000
K179	19,650	-0,662	0,000
K180	19,650	2,162	0,000
K183	20,900	0,750	0,000
K184	19,850	0,750	0,000
K185	21,336	-1,550	-19,000
K187	21,336	3,050	-19,000
K188	19,786	0,000	0,000
K189	19,786	1,500	0,000
K190	-0,036	3,050	-19,000
K191	-0,036	-1,550	-19,000
K192	1,514	0,000	0,000
K193	1,514	1,500	0,000

6. 1D-staaf

Naam	Doorsnede	Lengte [m]	Vorm	Beginknoop	Eindknoop	Type	EEM-type	Laag
S3	CS1 - Rechthoek (450; 450)	19,000	Lijn	K51	K52	Algemeen (0)	standaard	Laag1
S19	CS1 - Rechthoek (450; 450)	19,233	Lijn	K86	K81	Algemeen (0)	standaard	Laag1
S24	CS1 - Rechthoek (450; 450)	19,233	Lijn	K94	K92	Algemeen (0)	standaard	Laag1
S50	CS1 - Rechthoek (450; 450)	19,233	Lijn	K169	K170	Algemeen (0)	standaard	Laag1
S51	CS1 - Rechthoek (450; 450)	19,233	Lijn	K171	K172	Algemeen (0)	standaard	Laag1
S52	CS1 - Rechthoek (450; 450)	19,233	Lijn	K177	K173	Algemeen (0)	standaard	Laag1
S53	CS1 - Rechthoek (450; 450)	19,233	Lijn	K178	K174	Algemeen (0)	standaard	Laag1
S54	CS1 - Rechthoek (450; 450)	19,233	Lijn	K179	K175	Algemeen (0)	standaard	Laag1
S55	CS1 - Rechthoek (450; 450)	19,233	Lijn	K180	K176	Algemeen (0)	standaard	Laag1
S56	CS1 - Rechthoek (450; 450)	19,126	Lijn	K188	K185	Algemeen (0)	standaard	Laag1
S58	CS1 - Rechthoek (450; 450)	19,126	Lijn	K189	K187	Algemeen (0)	standaard	Laag1
S59	CS1 - Rechthoek (450; 450)	19,126	Lijn	K193	K190	Algemeen (0)	standaard	Laag1
S60	CS1 - Rechthoek (450; 450)	19,126	Lijn	K192	K191	Algemeen (0)	standaard	Laag1

7. 2D-element

Naam	Materiaal	D. [mm]	Dikte type	Type	Laag
E2	C30/37	3000	konstant	vloer (90)	Laag1

8. Subregio

Naam, 2D-element, Materiaal, Dikte type	Regio3	E2	C30/37	konstant		
2D-element systeemvlak op, Exc. z [mm], D. [mm], Punt 4, Knoop, Rand, Gewicht	Boven	0		1800	K156 K157 K155	Cirkelboog Lijn
Naam, 2D-element, Materiaal, Dikte type	Regio4	E2	C30/37	konstant		
2D-element systeemvlak op, Exc. z [mm], D. [mm], Punt 4, Knoop, Rand, Gewicht	Boven	0		1800	K144 K145 K146	Lijn Cirkelboog
Naam, 2D-element, Materiaal, Dikte type	Regio6	E2	C30/37	konstant		
2D-element systeemvlak op, Exc. z [mm], D. [mm], Punt 4, Knoop, Rand, Gewicht	Boven	0		1800	K153 K154 K152	Cirkelboog Lijn
Naam, 2D-element, Materiaal, Dikte type	Regio7	E2	C30/37	konstant		
2D-element systeemvlak op, Exc. z [mm], D. [mm], Punt 4, Knoop, Rand, Gewicht	Boven	0		1800	K147 K148 K149	Lijn Cirkelboog
Naam, 2D-element, Materiaal, Dikte type	Regio8	E2	C30/37	konstant		
2D-element systeemvlak op, Exc. z [mm], D. [mm], Punt 4, Knoop, Rand, Gewicht	Onder	0		1200	K158 K156 K159 K144 K143	Lijn Cirkelboog Lijn Lijn
Naam, 2D-element, Materiaal, Dikte type	Regio9	E2	C30/37	konstant		
2D-element systeemvlak op, Exc. z [mm], D. [mm], Punt 4, Knoop, Rand, Gewicht	Onder	0		1200	K160 K162 K161	Cirkelboog Lijn

2D-element systeemvlak op, Exc. z [mm], D. [mm], Punt 4, Knoop, Rand, Gewicht	Onder	0		1200	K163 K165 K164	Cirkelboog Lijn
Naam, 2D-element, Materiaal, Dikte type	Regio10	E2	C30/37	konstant		
2D-element systeemvlak op, Exc. z [mm], D. [mm], Punt 4, Knoop, Rand, Gewicht	Onder	0		1200	K152 K151 K150 K148 K166	Lijn Lijn Lijn Cirkelboog

9. Knoopondersteuningen

Naam	Knoop	Systeem	Type	X	Y	Z	Stijfheid Z [MN/m]	Rx	Ry	Rz
Sn3	K52	GCS	Standaard	Vast	Vast	Verend	1,2000e+02	Vrij	Vrij	Vrij
Sn9	K81	GCS	Standaard	Vast	Vast	Verend	1,2000e+02	Vrij	Vrij	Vrij
Sn14	K92	GCS	Standaard	Vast	Vast	Verend	1,2000e+02	Vrij	Vrij	Vrij
Sn41	K173	GCS	Standaard	Vast	Vast	Verend	1,2000e+02	Vrij	Vrij	Vrij
Sn42	K174	GCS	Standaard	Vast	Vast	Verend	1,2000e+02	Vrij	Vrij	Vrij
Sn45	K172	GCS	Standaard	Vast	Vast	Verend	1,2000e+02	Vrij	Vrij	Vrij
Sn46	K170	GCS	Standaard	Vast	Vast	Verend	1,2000e+02	Vrij	Vrij	Vrij
Sn47	K176	GCS	Standaard	Vast	Vast	Verend	1,2000e+02	Vrij	Vrij	Vrij
Sn49	K175	GCS	Standaard	Vast	Vast	Verend	1,2000e+02	Vrij	Vrij	Vrij
Sn50	K185	GCS	Standaard	Vast	Vast	Verend	1,2000e+02	Vrij	Vrij	Vrij
Sn52	K187	GCS	Standaard	Vast	Vast	Verend	1,2000e+02	Vrij	Vrij	Vrij
Sn53	K190	GCS	Standaard	Vast	Vast	Verend	1,2000e+02	Vrij	Vrij	Vrij
Sn54	K191	GCS	Standaard	Vast	Vast	Verend	1,2000e+02	Vrij	Vrij	Vrij

10. Lijnondersteuning op staaf

Staaf	Naam Systeem	Pos x_1 [m] Pos x_2 [m]	Coör Oors	X	Y	Stijfheid Y [MN/m²]	Z	Stijfheid Z [MN/m²]	Rx	Ry	Rz
S3	Slb43 LCS	0,900 6,400	Abso Vanaf begin	Vrij	Verend	6,0000e+00	Verend	6,0000e+00	Vrij	Vrij	Vrij
S3	Slb163 LCS	12,900 22,000	Abso Vanaf begin	Vrij	Verend	1,4400e+01	Verend	1,4400e+01	Vrij	Vrij	Vrij
S3	Slb83 LCS	6,400 10,900	Abso Vanaf begin	Vrij	Verend	1,2000e+00	Verend	1,2000e+00	Vrij	Vrij	Vrij
S3	Slb3 LCS	0,000 0,900	Abso Vanaf begin	Vrij	Verend	1,2000e+00	Verend	1,2000e+00	Vrij	Vrij	Vrij
S3	Slb123 LCS	10,900 12,900	Abso Vanaf begin	Vrij	Verend	7,2000e+00	Verend	7,2000e+00	Vrij	Vrij	Vrij
S19	Slb97 LCS	6,400 10,900	Abso Vanaf begin	Vrij	Verend	1,2000e+00	Verend	1,2000e+00	Vrij	Vrij	Vrij
S19	Slb137 LCS	10,900 12,900	Abso Vanaf begin	Vrij	Verend	7,2000e+00	Verend	7,2000e+00	Vrij	Vrij	Vrij
S19	Slb17 LCS	0,000 0,900	Abso Vanaf begin	Vrij	Verend	1,2000e+00	Verend	1,2000e+00	Vrij	Vrij	Vrij
S19	Slb57 LCS	0,900 6,400	Abso Vanaf begin	Vrij	Verend	6,0000e+00	Verend	6,0000e+00	Vrij	Vrij	Vrij
S19	Slb177 LCS	12,900 22,000	Abso Vanaf begin	Vrij	Verend	1,4400e+01	Verend	1,4400e+01	Vrij	Vrij	Vrij
S24	Slb182 LCS	12,900 22,000	Abso Vanaf begin	Vrij	Verend	1,4400e+01	Verend	1,4400e+01	Vrij	Vrij	Vrij
S24	Slb142 LCS	10,900 12,900	Abso Vanaf begin	Vrij	Verend	7,2000e+00	Verend	7,2000e+00	Vrij	Vrij	Vrij
S24	Slb22 LCS	0,000 0,900	Abso Vanaf begin	Vrij	Verend	1,2000e+00	Verend	1,2000e+00	Vrij	Vrij	Vrij
S24	Slb62 LCS	0,900 6,400	Abso Vanaf begin	Vrij	Verend	6,0000e+00	Verend	6,0000e+00	Vrij	Vrij	Vrij
S24	Slb102 LCS	6,400 10,900	Abso Vanaf begin	Vrij	Verend	1,2000e+00	Verend	1,2000e+00	Vrij	Vrij	Vrij
S50	Slb209 LCS	10,900 12,900	Abso Vanaf begin	Vrij	Verend	7,2000e+00	Verend	7,2000e+00	Vrij	Vrij	Vrij
S50	Slb210 LCS	12,900 22,000	Abso Vanaf begin	Vrij	Verend	1,4400e+01	Verend	1,4400e+01	Vrij	Vrij	Vrij
S50	Slb208 LCS	6,400 10,900	Abso Vanaf begin	Vrij	Verend	1,2000e+00	Verend	1,2000e+00	Vrij	Vrij	Vrij
S50	Slb206 LCS	0,000 0,900	Abso Vanaf begin	Vrij	Verend	1,2000e+00	Verend	1,2000e+00	Vrij	Vrij	Vrij
S50	Slb207 LCS	0,900 6,400	Abso Vanaf begin	Vrij	Verend	6,0000e+00	Verend	6,0000e+00	Vrij	Vrij	Vrij

Staaf	Naam Systeem	Pos x_1 [m] Pos x_2 [m]	Coör Oors	X	Y	Stijfheid Y [MN/m²]	Z	Stijfheid Z [MN/m²]	Rx	Ry	Rz
S51	Slb214 LCS	10,900 12,900	Abso Vanaf begin	Vrij	Verend	7,2000e+00	Verend	7,2000e+00	Vrij	Vrij	Vrij
S51	Slb215 LCS	12,900 22,000	Abso Vanaf begin	Vrij	Verend	1,4400e+01	Verend	1,4400e+01	Vrij	Vrij	Vrij
S51	Slb213 LCS	6,400 10,900	Abso Vanaf begin	Vrij	Verend	1,2000e+00	Verend	1,2000e+00	Vrij	Vrij	Vrij
S51	Slb211 LCS	0,000 0,900	Abso Vanaf begin	Vrij	Verend	1,2000e+00	Verend	1,2000e+00	Vrij	Vrij	Vrij
S51	Slb212 LCS	0,900 6,400	Abso Vanaf begin	Vrij	Verend	6,0000e+00	Verend	6,0000e+00	Vrij	Vrij	Vrij
S52	Slb219 LCS	10,900 12,900	Abso Vanaf begin	Vrij	Verend	7,2000e+00	Verend	7,2000e+00	Vrij	Vrij	Vrij
S52	Slb220 LCS	12,900 22,000	Abso Vanaf begin	Vrij	Verend	1,4400e+01	Verend	1,4400e+01	Vrij	Vrij	Vrij
S52	Slb218 LCS	6,400 10,900	Abso Vanaf begin	Vrij	Verend	1,2000e+00	Verend	1,2000e+00	Vrij	Vrij	Vrij
S52	Slb216 LCS	0,000 0,900	Abso Vanaf begin	Vrij	Verend	1,2000e+00	Verend	1,2000e+00	Vrij	Vrij	Vrij
S52	Slb217 LCS	0,900 6,400	Abso Vanaf begin	Vrij	Verend	6,0000e+00	Verend	6,0000e+00	Vrij	Vrij	Vrij
S53	Slb224 LCS	10,900 12,900	Abso Vanaf begin	Vrij	Verend	7,2000e+00	Verend	7,2000e+00	Vrij	Vrij	Vrij
S53	Slb225 LCS	12,900 22,000	Abso Vanaf begin	Vrij	Verend	1,4400e+01	Verend	1,4400e+01	Vrij	Vrij	Vrij
S53	Slb223 LCS	6,400 10,900	Abso Vanaf begin	Vrij	Verend	1,2000e+00	Verend	1,2000e+00	Vrij	Vrij	Vrij
S53	Slb221 LCS	0,000 0,900	Abso Vanaf begin	Vrij	Verend	1,2000e+00	Verend	1,2000e+00	Vrij	Vrij	Vrij
S53	Slb222 LCS	0,900 6,400	Abso Vanaf begin	Vrij	Verend	6,0000e+00	Verend	6,0000e+00	Vrij	Vrij	Vrij
S54	Slb229 LCS	10,900 12,900	Abso Vanaf begin	Vrij	Verend	7,2000e+00	Verend	7,2000e+00	Vrij	Vrij	Vrij
S54	Slb230 LCS	12,900 22,000	Abso Vanaf begin	Vrij	Verend	1,4400e+01	Verend	1,4400e+01	Vrij	Vrij	Vrij
S54	Slb228 LCS	6,400 10,900	Abso Vanaf begin	Vrij	Verend	1,2000e+00	Verend	1,2000e+00	Vrij	Vrij	Vrij
S54	Slb226 LCS	0,000 0,900	Abso Vanaf begin	Vrij	Verend	1,2000e+00	Verend	1,2000e+00	Vrij	Vrij	Vrij
S54	Slb227 LCS	0,900 6,400	Abso Vanaf begin	Vrij	Verend	6,0000e+00	Verend	6,0000e+00	Vrij	Vrij	Vrij
S55	Slb234 LCS	10,900 12,900	Abso Vanaf begin	Vrij	Verend	7,2000e+00	Verend	7,2000e+00	Vrij	Vrij	Vrij
S55	Slb235 LCS	12,900 22,000	Abso Vanaf begin	Vrij	Verend	1,4400e+01	Verend	1,4400e+01	Vrij	Vrij	Vrij
S55	Slb233 LCS	6,400 10,900	Abso Vanaf begin	Vrij	Verend	1,2000e+00	Verend	1,2000e+00	Vrij	Vrij	Vrij
S55	Slb231 LCS	0,000 0,900	Abso Vanaf begin	Vrij	Verend	1,2000e+00	Verend	1,2000e+00	Vrij	Vrij	Vrij
S55	Slb232 LCS	0,900 6,400	Abso Vanaf begin	Vrij	Verend	6,0000e+00	Verend	6,0000e+00	Vrij	Vrij	Vrij
S56	Slb239 LCS	10,900 12,900	Abso Vanaf begin	Vrij	Verend	7,2000e+00	Verend	7,2000e+00	Vrij	Vrij	Vrij
S56	Slb240 LCS	12,900 22,000	Abso Vanaf begin	Vrij	Verend	1,4400e+01	Verend	1,4400e+01	Vrij	Vrij	Vrij
S56	Slb238 LCS	6,400 10,900	Abso Vanaf begin	Vrij	Verend	1,2000e+00	Verend	1,2000e+00	Vrij	Vrij	Vrij
S56	Slb236 LCS	0,000 0,900	Abso Vanaf begin	Vrij	Verend	1,2000e+00	Verend	1,2000e+00	Vrij	Vrij	Vrij
S56	Slb237 LCS	0,900 6,400	Abso Vanaf begin	Vrij	Verend	6,0000e+00	Verend	6,0000e+00	Vrij	Vrij	Vrij
S58	Slb249 LCS	10,900 12,900	Abso Vanaf begin	Vrij	Verend	7,2000e+00	Verend	7,2000e+00	Vrij	Vrij	Vrij
S58	Slb250 LCS	12,900 22,000	Abso Vanaf begin	Vrij	Verend	1,4400e+01	Verend	1,4400e+01	Vrij	Vrij	Vrij
S58	Slb248 LCS	6,400 10,900	Abso Vanaf begin	Vrij	Verend	1,2000e+00	Verend	1,2000e+00	Vrij	Vrij	Vrij
S58	Slb246 LCS	0,000 0,900	Abso Vanaf begin	Vrij	Verend	1,2000e+00	Verend	1,2000e+00	Vrij	Vrij	Vrij
S58	Slb247 LCS	0,900 6,400	Abso Vanaf begin	Vrij	Verend	6,0000e+00	Verend	6,0000e+00	Vrij	Vrij	Vrij
S59	Slb254 LCS	10,900 12,900	Abso Vanaf begin	Vrij	Verend	7,2000e+00	Verend	7,2000e+00	Vrij	Vrij	Vrij

Staaf	Naam Systeem	Pos x_1 [m] Pos x_2 [m]	Coör Oors	X	Y	Stijfheid Y [MN/m²]	Z	Stijfheid Z [MN/m²]	Rx	Ry	Rz
S59	Slb255 LCS	12,900 22,000	Abso Vanaf begin	Vrij	Verend	1,4400e+01	Verend	1,4400e+01	Vrij	Vrij	Vrij
S59	Slb253 LCS	6,400 10,900	Abso Vanaf begin	Vrij	Verend	1,2000e+00	Verend	1,2000e+00	Vrij	Vrij	Vrij
S59	Slb251 LCS	0,000 0,900	Abso Vanaf begin	Vrij	Verend	1,2000e+00	Verend	1,2000e+00	Vrij	Vrij	Vrij
S59	Slb252 LCS	0,900 6,400	Abso Vanaf begin	Vrij	Verend	6,0000e+00	Verend	6,0000e+00	Vrij	Vrij	Vrij
S60	Slb259 LCS	10,900 12,900	Abso Vanaf begin	Vrij	Verend	7,2000e+00	Verend	7,2000e+00	Vrij	Vrij	Vrij
S60	Slb260 LCS	12,900 22,000	Abso Vanaf begin	Vrij	Verend	1,4400e+01	Verend	1,4400e+01	Vrij	Vrij	Vrij
S60	Slb258 LCS	6,400 10,900	Abso Vanaf begin	Vrij	Verend	1,2000e+00	Verend	1,2000e+00	Vrij	Vrij	Vrij
S60	Slb256 LCS	0,000 0,900	Abso Vanaf begin	Vrij	Verend	1,2000e+00	Verend	1,2000e+00	Vrij	Vrij	Vrij
S60	Slb257 LCS	0,900 6,400	Abso Vanaf begin	Vrij	Verend	6,0000e+00	Verend	6,0000e+00	Vrij	Vrij	Vrij

11. Belastingsgevallen

11.1. Belastingsgevallen - BG1

Naam	Omschrijving	Actie type	Lastgroep	Belastingtype	Richting
BG1	Eigengewicht	Permanent	LG8	Eigen gewicht	-Z

11.1.1. Belasting grafisch

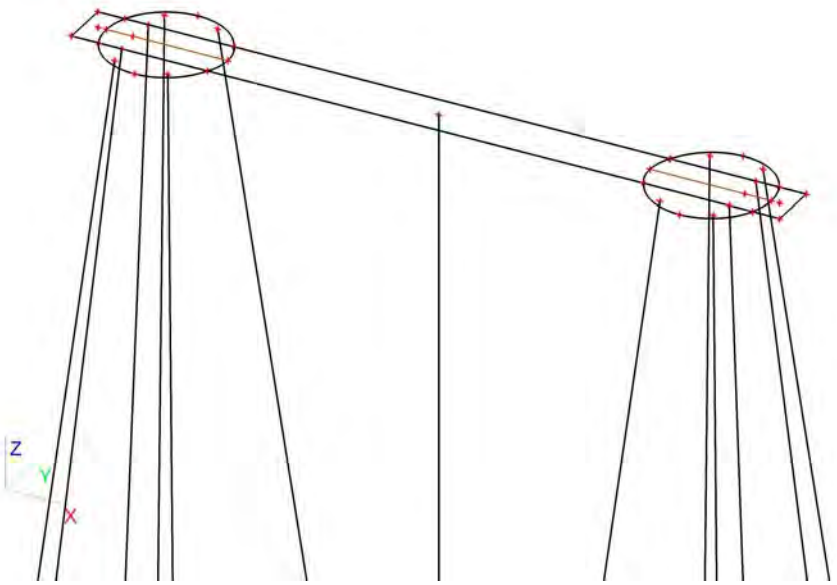

11.2. Belastingsgevallen - BG3

Naam	Omschrijving	Actie type	Lastgroep	Belastingtype	Spec	Duur	'Master' belastingsgeval
BG3	ULS 1	Variabel	LG7	Statisch	Standaard	Kort	Geen

11.2.1. Vrije puntmomenten

Typenaam	Naam	Rich	Type	Geldigheid	Selecteer	Waarde - F [kNm]	Belastingsgeval	Coördinaat X [m]	Coördinaat Y [m]	Coördinaat Z [m]	Coördinaat ux [m]	Coördinaat uy [m]	Coördinaat uz [m]	Systeem
Vrij puntmoment	FM1	Mx	Moment	Alle	Auto	-5841,00	BG3 - ULS 1	2,450	0,750	0,000	2,450	0,750	0,000	GCS
Vrij puntmoment	FM2	Mx	Moment	Alle	Auto	-5841,00	BG3 - ULS 1	18,850	0,750	0,000	18,850	0,750	0,000	GCS
Vrij puntmoment	FM3	My	Moment	Alle	Auto	547,00	BG3 - ULS 1	2,450	0,750	0,000	2,450	0,750	0,000	GCS
Vrij puntmoment	FM4	My	Moment	Alle	Auto	547,00	BG3 - ULS 1	18,850	0,750	0,000	18,850	0,750	0,000	GCS
Vrij puntmoment	FM5	Mx	Moment	Alle	Auto	415,65	BG3 - ULS 1	2,450	0,750	0,000	2,450	0,750	0,000	GCS
Vrij puntmoment	FM6	Mx	Moment	Alle	Auto	415,65	BG3 - ULS 1	18,850	0,750	0,000	18,850	0,750	0,000	GCS
Vrij puntmoment	FM7	My	Moment	Alle	Auto	0,00	BG3 - ULS 1	2,450	0,750	0,000	-13,960	0,757	0,000	GCS
Vrij puntmoment	FM8	My	Moment	Alle	Auto	0,00	BG3 - ULS 1	18,850	0,750	0,000	2,440	0,757	0,000	GCS

11.2.2. Genereer vrije lasten

Naam	Belastingsgeval	2D-element	Rich	Belastingstype Type	Oorspronkelijke belasting	Waarde - F [kN] Waarde - F [kNm]	Systeem Locatie
GFF1	BG3 - ULS 1	E2	Z	Punt Kracht	FF1	-921,00	GCS Lengte
GFF4	BG3 - ULS 1	E2	Z	Punt Kracht	FF2	-921,00	GCS Lengte
GFF5	BG3 - ULS 1	E2	Mx	Punt Moment	FM6	415,65	GCS Lengte
GFF6	BG3 - ULS 1	E2	Y	Punt Kracht	FF3	163,00	GCS Lengte
GFF7	BG3 - ULS 1	E2	X	Punt Kracht	FF5	0,00	GCS Lengte
GFF9	BG3 - ULS 1	E2	Y	Punt Kracht	FF4	163,00	GCS Lengte
GFF10	BG3 - ULS 1	E2	X	Punt Kracht	FF6	0,00	GCS Lengte
GFF25	BG3 - ULS 1	E2	My	Punt Moment	FM7	0,00	GCS Lengte
GFF27	BG3 - ULS 1	E2	My	Punt Moment	FM8	0,00	GCS Lengte
GFF41	BG3 - ULS 1	E2	Mx	Punt Moment	FM1	-5841,00	GCS Lengte
GFF42	BG3 - ULS 1	E2	Mx	Punt Moment	FM2	-5841,00	GCS Lengte
GFF43	BG3 - ULS 1	E2	My	Punt Moment	FM3	547,00	GCS Lengte
GFF44	BG3 - ULS 1	E2	My	Punt Moment	FM4	547,00	GCS Lengte
GFF45	BG3 - ULS 1	E2	Mx	Punt Moment	FM5	415,65	GCS Lengte

11.2.3. Belasting grafisch

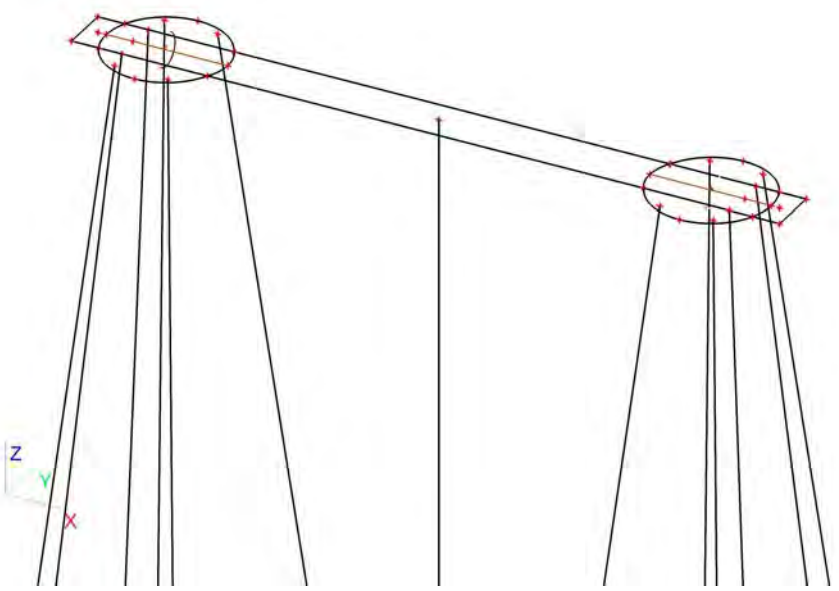

11.3. Belastingsgevallen - BG2

Naam	Omschrijving	Actie type	Lastgroep	Belastingtype
BG2	Grond	Permanent	LG8	Standaard

11.3.1. Lasten op oppervlak

Naam	Rich	Type	Waarde [kN/m²]	Belastingsgeval	Systeem	Loc
SF1	Z	Kracht	-25,50	BG2 - Grond	LCS	Lengte
SF2	Z	Kracht	-25,50	BG2 - Grond	LCS	Lengte
SF3	Z	Kracht	-25,50	BG2 - Grond	LCS	Lengte

11.3.2. Belasting grafisch

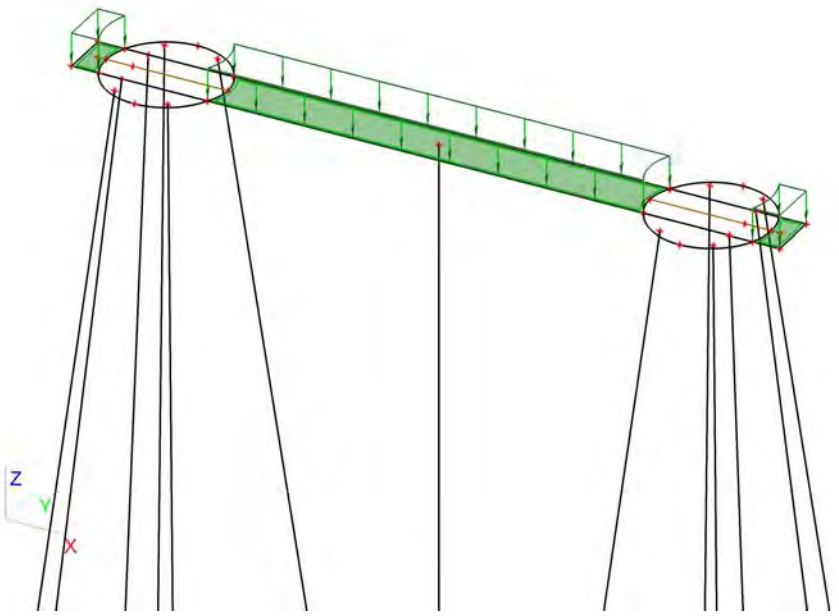

11.4. Belastingsgevallen - BG4

Naam	Omschrijving	Actie type	Lastgroep	Belastingtype	Spec	Duur	'Master' belastingsgeval
BG4	ULS 2	Variabel	LG9	Statisch	Standaard	Kort	Geen

11.4.1. Vrije puntmomenten

Typenaam	Naam	Rich	Type	Geldigheid	Selecteer	Waarde - F [kNm]	Belastingsgeval	Coördinaat X [m]	Coördinaat Y [m]	Coördinaat Z [m]	Coördinaat ux [m]	Coördinaat uy [m]	Coördinaat uz [m]	Systeem
Vrij puntmoment	FM9	Mx	Moment	Alle	Auto	0,00	BG4 - ULS 2	2,450	0,750	0,000	3,703	0,750	0,000	GCS
Vrij puntmoment	FM10	Mx	Moment	Alle	Auto	0,00	BG4 - ULS 2	18,850	0,750	0,000	20,275	0,744	0,000	GCS
Vrij puntmoment	FM11	My	Moment	Alle	Auto	21005,00	BG4 - ULS 2	2,450	0,750	0,000	-12,525	0,744	0,000	GCS
Vrij puntmoment	FM12	My	Moment	Alle	Auto	21005,00	BG4 - ULS 2	18,850	0,750	0,000	3,703	0,750	0,000	GCS
Vrij puntmoment	FM13	Mx	Moment	Alle	Auto	0,00	BG4 - ULS 2	2,450	0,750	0,000	-13,950	0,750	0,000	GCS
Vrij puntmoment	FM14	Mx	Moment	Alle	Auto	0,00	BG4 - ULS 2	18,850	0,750	0,000	2,450	0,750	0,000	GCS
Vrij puntmoment	FM15	My	Moment	Alle	Auto	1050,60	BG4 - ULS 2	2,450	0,750	0,000	-13,950	0,750	0,000	GCS
Vrij puntmoment	FM16	My	Moment	Alle	Auto	1050,60	BG4 - ULS 2	18,850	0,750	0,000	2,450	0,750	0,000	GCS

11.4.2. Genereer vrije lasten

Naam	Belastingsgeval	2D-element	Rich	Belastingstype Type	Oorspronkelijke belasting	Waarde - F [kN] Waarde - F [kNm]	Systeem Locatie
GFF2	BG4 - ULS 2	E2	Y	Punt Kracht	FF9	0,00	GCS Lengte
GFF12	BG4 - ULS 2	E2	Z	Punt Kracht	FF7	-859,00	GCS Lengte
GFF13	BG4 - ULS 2	E2	Mx	Punt Moment	FM13	0,00	GCS Lengte
GFF14	BG4 - ULS 2	E2	Z	Punt Kracht	FF8	-859,00	GCS Lengte
GFF15	BG4 - ULS 2	E2	Mx	Punt Moment	FM14	0,00	GCS Lengte
GFF16	BG4 - ULS 2	E2	Y	Punt Kracht	FF10	0,00	GCS Lengte
GFF18	BG4 - ULS 2	E2	X	Punt Kracht	FF11	412,00	GCS Lengte
GFF19	BG4 - ULS 2	E2	X	Punt Kracht	FF12	412,00	GCS Lengte
GFF20	BG4 - ULS 2	E2	Mx	Punt Moment	FM10	0,00	GCS Lengte

Naam	Belastingsgeval	2D-element	Rich	Belastingstype Type	Oorspronkelijke belasting	Waarde - F [kN] Waarde - F [kNm]	Systeem Locatie
GFF22	BG4 - ULS 2	E2	My	Punt Moment	FM15	 1050,60	GCS Lengte
GFF24	BG4 - ULS 2	E2	My	Punt Moment	FM16	 1050,60	GCS Lengte
GFF29	BG4 - ULS 2	E2	My	Punt Moment	FM11	 21005,00	GCS Lengte
GFF31	BG4 - ULS 2	E2	My	Punt Moment	FM12	 21005,00	GCS Lengte
GFF46	BG4 - ULS 2	E2	Mx	Punt Moment	FM9	 0,00	GCS Lengte

11.4.3. Belasting grafisch

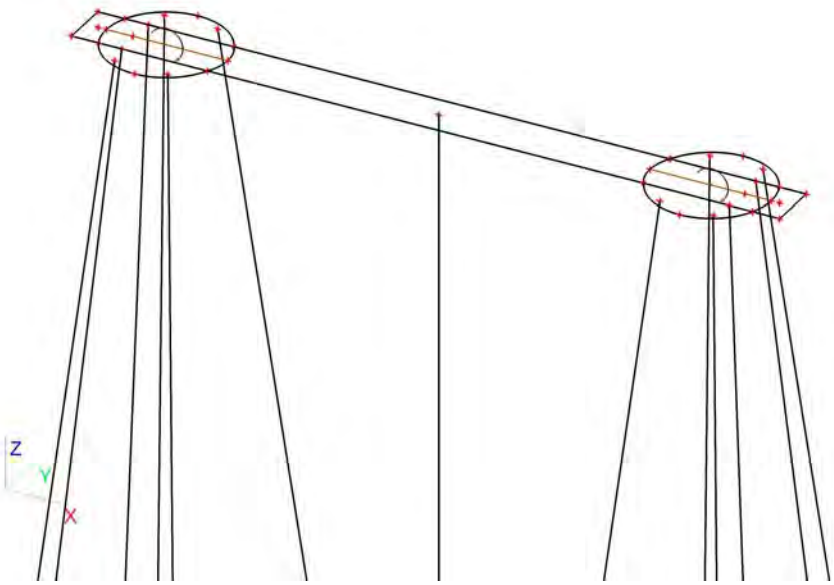

11.5. Belastingsgevallen - BG5

Naam	Omschrijving	Actie type	Lastgroep	Belastingtype	Spec	Duur	'Master' belastingsgeval
BG5	SLS 1	Variabel	LG9	Statisch	Standaard	Kort	Geen

11.5.1. Vrije puntmomenten

Typenaam	Naam	Rich	Type	Geldigheid	Selecteer	Waarde - F [kNm]	Belastingsgeval	Coördinaat X [m]	Coördinaat Y [m]	Coördinaat Z [m]	Coördinaat ux [m]	Coördinaat uy [m]	Coördinaat uz [m]	Systeem
Vrij puntmoment	FM17	Mx	Moment	Alle	Auto	-4314,00	BG5 - SLS 1	2,450	0,750	0,000	1,450	0,750	0,000	GCS
Vrij puntmoment	FM18	Mx	Moment	Alle	Auto	-4314,00	BG5 - SLS 1	18,850	0,750	0,000	17,850	0,750	0,000	GCS
Vrij puntmoment	FM19	My	Moment	Alle	Auto	9532,00	BG5 - SLS 1	2,450	0,750	0,000	1,450	0,750	0,000	GCS
Vrij puntmoment	FM20	My	Moment	Alle	Auto	9532,00	BG5 - SLS 1	18,850	0,750	0,000	17,850	0,750	0,000	GCS
Vrij puntmoment	FM21	Mx	Moment	Alle	Auto	295,80	BG5 - SLS 1	2,450	0,750	0,000	1,450	0,750	0,000	GCS
Vrij puntmoment	FM22	Mx	Moment	Alle	Auto	295,80	BG5 - SLS 1	18,850	0,750	0,000	17,850	0,750	0,000	GCS
Vrij puntmoment	FM23	My	Moment	Alle	Auto	295,80	BG5 - SLS 1	2,450	0,750	0,000	1,450	0,750	0,000	GCS
Vrij puntmoment	FM24	My	Moment	Alle	Auto	295,80	BG5 - SLS 1	18,850	0,750	0,000	17,850	0,750	0,000	GCS
Vrij puntmoment	FM29	Mx	Moment	Alle	Auto	267,75	BG5 - SLS 1	2,450	0,750	0,000	1,450	0,750	0,000	GCS
Vrij puntmoment	FM30	Mx	Moment	Alle	Auto	267,75	BG5 - SLS 1	18,850	0,750	0,000	17,850	0,750	0,000	GCS
Vrij puntmoment	FM31	My	Moment	Alle	Auto	708,90	BG5 - SLS 1	2,450	0,750	0,000	-14,960	0,757	0,000	GCS
Vrij puntmoment	FM32	My	Moment	Alle	Auto	708,90	BG5 - SLS 1	18,850	0,750	0,000	1,440	0,757	0,000	GCS

11.5.2. Genereer vrije lasten

Naam	Belastingsgeval	2D-element	Rich	Belastingstype Type	Oorspronkelijke belasting	Waarde - F [kN] Waarde - F [kNm]	Systeem Locatie
GFF3	BG5 - SLS 1	E2	My	Punt Moment	FM19	9532,00	GCS Lengte
GFF8	BG5 - SLS 1	E2	Mx	Punt Moment	FM17	-4314,00	GCS Lengte
GFF11	BG5 - SLS 1	E2	Mx	Punt Moment	FM18	-4314,00	GCS Lengte
GFF17	BG5 - SLS 1	E2	My	Punt Moment	FM20	9532,00	GCS Lengte
GFF21	BG5 - SLS 1	E2	Z	Punt Kracht	FF13	-726,00	GCS Lengte
GFF23	BG5 - SLS 1	E2	Z	Punt Kracht	FF14	-726,00	GCS Lengte
GFF26	BG5 - SLS 1	E2	Y	Punt Kracht	FF15	116,00	GCS Lengte
GFF28	BG5 - SLS 1	E2	Y	Punt Kracht	FF16	116,00	GCS Lengte
GFF30	BG5 - SLS 1	E2	X	Punt Kracht	FF17	197,00	GCS Lengte
GFF32	BG5 - SLS 1	E2	X	Punt Kracht	FF18	197,00	GCS Lengte
GFF38	BG5 - SLS 1	E2	Mx	Punt Moment	FM29	267,75	GCS Lengte
GFF40	BG5 - SLS 1	E2	Mx	Punt Moment	FM30	267,75	GCS Lengte
GFF47	BG5 - SLS 1	E2	Mx	Punt Moment	FM21	295,80	GCS Lengte
GFF48	BG5 - SLS 1	E2	Mx	Punt Moment	FM22	295,80	GCS Lengte
GFF49	BG5 - SLS 1	E2	My	Punt Moment	FM23	295,80	GCS Lengte
GFF50	BG5 - SLS 1	E2	My	Punt Moment	FM24	295,80	GCS Lengte
GFF55	BG5 - SLS 1	E2	My	Punt Moment	FM31	708,90	GCS Lengte
GFF56	BG5 - SLS 1	E2	My	Punt Moment	FM32	708,90	GCS Lengte

11.5.3. Belasting grafisch

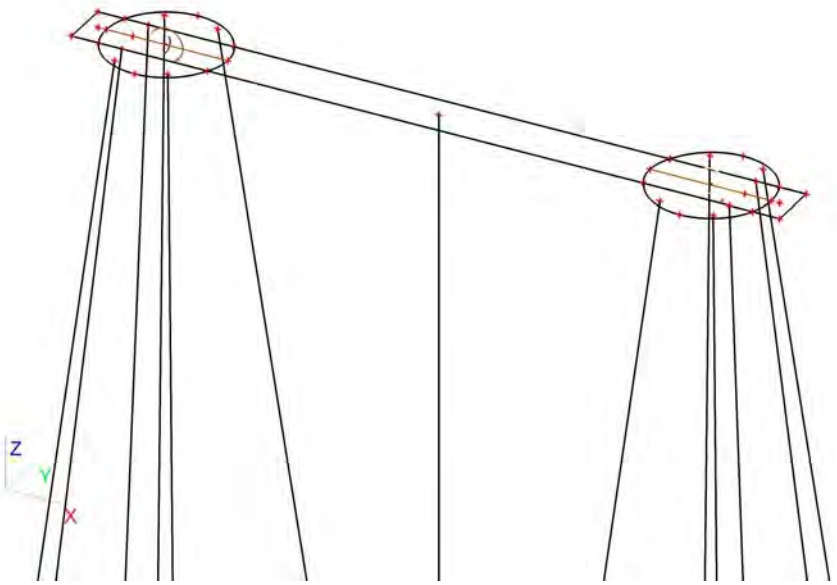

11.6. Belastingsgevallen - BG6

Naam	Omschrijving	Actie type	Lastgroep	Belastingtype	Spec	Duur	'Master' belastingsgeval
BG6	SLS 2	Variabel	LG9	Statisch	Standaard	Kort	Geen

11.6.1. Vrije puntmomenten

Typenaam	Naam	Rich	Type	Geldigheid	Selecteer	Waarde - F [kNm]	Belastingsgeval	Coördinaat X [m]	Coördinaat Y [m]	Coördinaat Z [m]	Coördinaat ux [m]	Coördinaat uy [m]	Coördinaat uz [m]	Systeem
Vrij puntmoment	FM25	Mx	Moment	Alle	Auto	-3672,00	BG6 - SLS 2	2,450	0,750	0,000	1,450	0,750	0,000	GCS
Vrij puntmoment	FM26	Mx	Moment	Alle	Auto	-3672,00	BG6 - SLS 2	18,850	0,750	0,000	17,850	0,750	0,000	GCS
Vrij puntmoment	FM27	My	Moment	Alle	Auto	14266,00	BG6 - SLS 2	2,450	0,750	0,000	1,450	0,750	0,000	GCS
Vrij puntmoment	FM28	My	Moment	Alle	Auto	14266,00	BG6 - SLS 2	18,850	0,750	0,000	17,850	0,750	0,000	GCS

11.6.2. Genereer vrije lasten

Naam	Belastingsgeval	2D-element	Rich	Belastingstype Type	Oorspronkelijke belasting	Waarde - F [kN] Waarde - F [kNm]	Systeem Locatie
GFF33	BG6 - SLS 2	E2	Z	Punt Kracht	FF19	-718,00	GCS Lengte
GFF34	BG6 - SLS 2	E2	Z	Punt Kracht	FF20	-718,00	GCS Lengte
GFF35	BG6 - SLS 2	E2	Y	Punt Kracht	FF21	105,00	GCS Lengte
GFF36	BG6 - SLS 2	E2	Y	Punt Kracht	FF22	105,00	GCS Lengte
GFF37	BG6 - SLS 2	E2	X	Punt Kracht	FF23	278,00	GCS Lengte
GFF39	BG6 - SLS 2	E2	X	Punt Kracht	FF24	278,00	GCS Lengte
GFF51	BG6 - SLS 2	E2	Mx	Punt Moment	FM25	-3672,00	GCS Lengte
GFF52	BG6 - SLS 2	E2	Mx	Punt Moment	FM26	-3672,00	GCS Lengte
GFF53	BG6 - SLS 2	E2	My	Punt Moment	FM27	14266,00	GCS Lengte
GFF54	BG6 - SLS 2	E2	My	Punt Moment	FM28	14266,00	GCS Lengte

11.6.3. Belasting grafisch

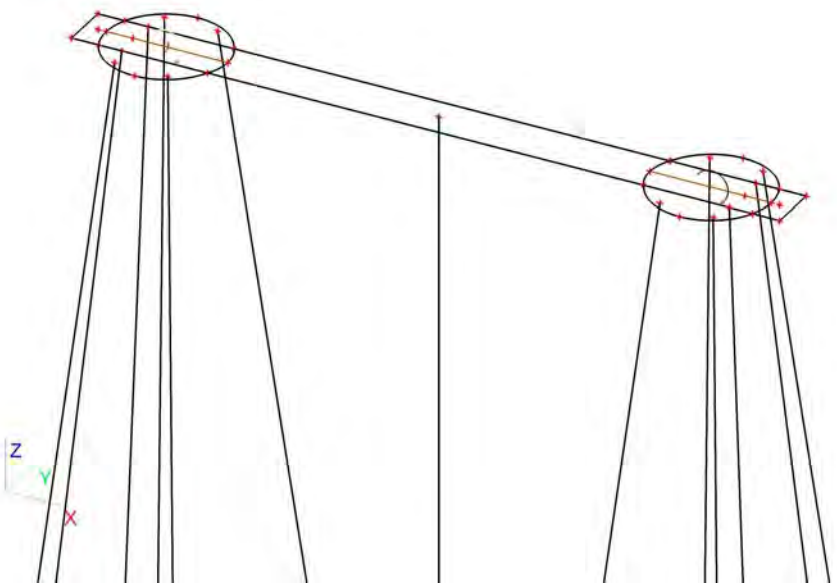

11.7. Belastingsgevallen - BG7

Naam	Omschrijving	Actie type	Lastgroep	Belastingtype	Spec	Duur	'Master' belastingsgeval
BG7	Belasting op maaiveld	Variabel	LG7	Statisch	Standaard	Kort	Geen

11.7.1. Lasten op oppervlak

Naam	Rich	Type	Waarde [kN/m²]	Belastingsgeval	Systeem	Loc
SF4	Z	Kracht	-10,00	BG7 - Belasting op maaiveld	LCS	Lengte
SF5	Z	Kracht	-10,00	BG7 - Belasting op maaiveld	LCS	Lengte
SF6	Z	Kracht	-10,00	BG7 - Belasting op maaiveld	LCS	Lengte

11.7.2. Belasting grafisch

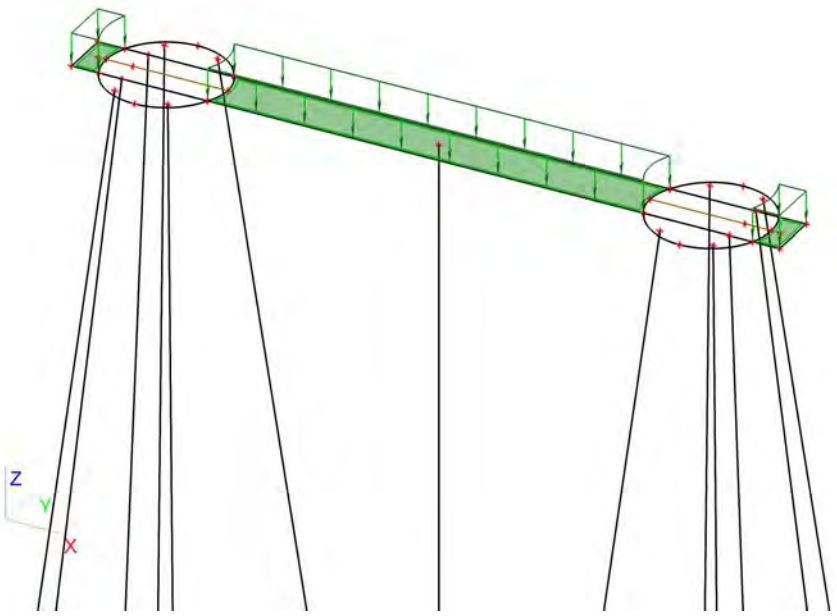

12. Combinaties

Naam	Type	Belastingsgevallen	Coëff. [-]
Combi1	Omhullende - uiterst	BG1 - Eigengewicht	1,30
		BG3 - ULS 1	1,00
		BG7 - Belasting op maaiveld	1,16
		BG2 - Grond	1,30
Combi2	Omhullende - uiterst	BG1 - Eigengewicht	1,30
		BG4 - ULS 2	1,00
		BG7 - Belasting op maaiveld	1,16
		BG2 - Grond	1,30
Combi3	Omhullende - uiterst	BG1 - Eigengewicht	1,30
		BG3 - ULS 1	0,60
		BG7 - Belasting op maaiveld	1,65
		BG2 - Grond	1,30
Combi4	Omhullende - uiterst	BG1 - Eigengewicht	1,30
		BG4 - ULS 2	0,60
		BG7 - Belasting op maaiveld	1,65
		BG2 - Grond	1,30
Combi5	Omhullende - uiterst	BG1 - Eigengewicht	0,54
		BG3 - ULS 1	1,00
		BG2 - Grond	0,54
Combi6	Omhullende -	BG1 - Eigengewicht	0,54

Naam	Type	Belastingsgevallen	Coëff. [-]
Combi6	Omhullende - sterkte	BG4 - ULS 2	1,00
		BG2 - Grond	0,54
Combi7	Omhullende - bruikbaarheid	BG1 - Eigengewicht	1,00
		BG5 - SLS 1	1,00
		BG7 - Belasting op maaiveld	1,16
		BG2 - Grond	1,00
Combi8	Omhullende - bruikbaarheid	BG1 - Eigengewicht	1,00
		BG6 - SLS 2	1,00
		BG7 - Belasting op maaiveld	0,70
		BG2 - Grond	1,00
Combi9	Omhullende - bruikbaarheid	BG1 - Eigengewicht	1,00
		BG5 - SLS 1	0,60
		BG7 - Belasting op maaiveld	1,00
		BG2 - Grond	1,00
Combi10	Omhullende - bruikbaarheid	BG1 - Eigengewicht	1,00
		BG6 - SLS 2	0,60
		BG7 - Belasting op maaiveld	1,00
		BG2 - Grond	1,00
Combi11	Omhullende - bruikbaarheid	BG1 - Eigengewicht	0,60
		BG5 - SLS 1	1,00
		BG2 - Grond	0,60
Combi12	Omhullende - bruikbaarheid	BG1 - Eigengewicht	0,60
		BG6 - SLS 2	1,00
		BG2 - Grond	0,60

13. Verplaatsing van knopen SLS 1

Lineaire berekening, Extreem : Globaal
Selectie : Alle
Belastingsgevallen : BG5

BG	Snede	elem	dx [m]	Ux [mm]	Uy [mm]	Uz [mm]	Fix [mrad]	Fiy [mrad]	Fiz [mrad]
BG5	Snede2	709	3,674	**7,6**	**4,0**	**-9,6**	-3,1	4,5	**1,6**
BG5	Snede1	27	2,750	**7,6**	4,1	-5,3	-3,1	4,4	-1,4
BG5	Snede1	80	3,650	7,6	**4,1**	-9,2	-3,1	4,2	-1,3
BG5	Snede1	58	0,000	7,6	4,0	**7,0**	**-3,1**	4,5	**-1,6**
BG5	Snede1	23	1,750	7,6	4,0	-0,9	**-3,2**	**4,8**	-1,5
BG5	Snede2	168	0,000	7,6	4,1	6,5	-3,1	**4,2**	1,3

14. Reacties

Lineaire berekening, Extreem : Globaal
Selectie : Alle
Klasse : UGT

Steunpunt	BG	Rx [kN]	Ry [kN]	Rz [kN]	Mx [kNm]	My [kNm]	Mz [kNm]
Sn45/K172	Combi2/1	**-120,16**	**-197,09**	**1348,75**	0,00	0,00	0,00
Sn42/K174	Combi1/2	**108,92**	-179,25	1226,78	0,00	0,00	0,00
Sn46/K170	Combi2/1	-120,16	**197,09**	1348,74	0,00	0,00	0,00
Sn54/K191	Combi6/3	-61,88	-61,48	**-686,23**	0,00	0,00	0,00
Sn3/K52	Combi2/1	-0,57	0,00	1049,97	**0,00**	0,00	0,00
Sn42/K174	Combi2/4	-15,75	25,30	-166,39	**0,00**	0,00	0,00
Sn3/K52	Combi4/5	-0,34	0,00	1053,09	0,00	**0,00**	0,00
Sn41/K173	Combi3/6	42,55	70,02	483,05	0,00	**0,00**	0,00
Sn3/K52	Combi1/7	0,00	0,00	847,07	0,00	0,00	**0,00**

15. 2D element - Interne krachten; mxD+

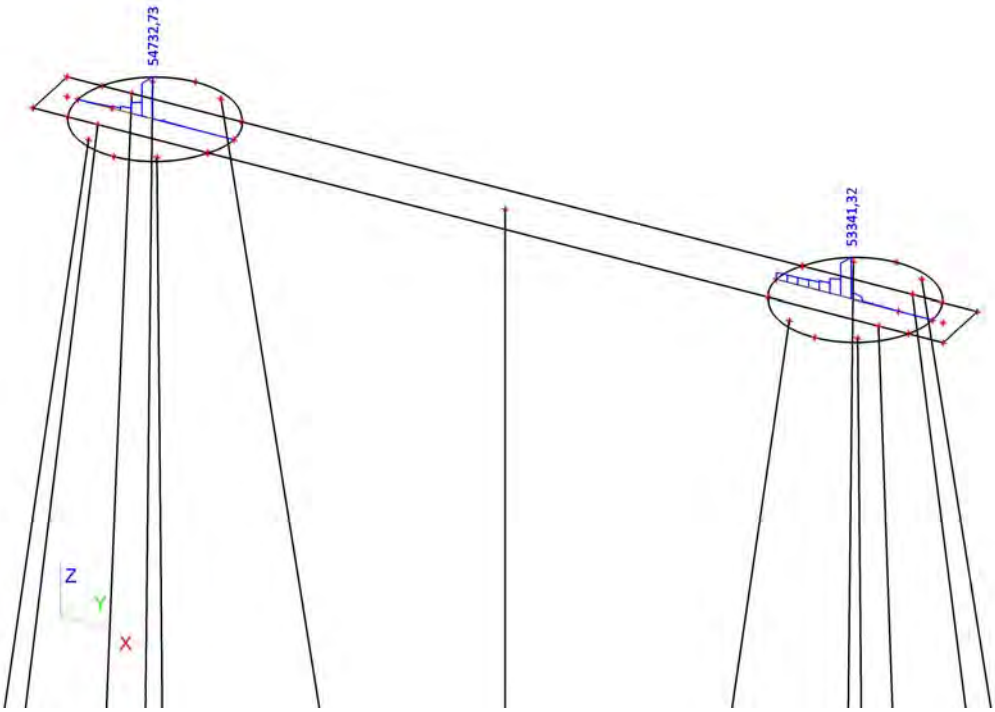

16. 2D element - Interne krachten; mxD-

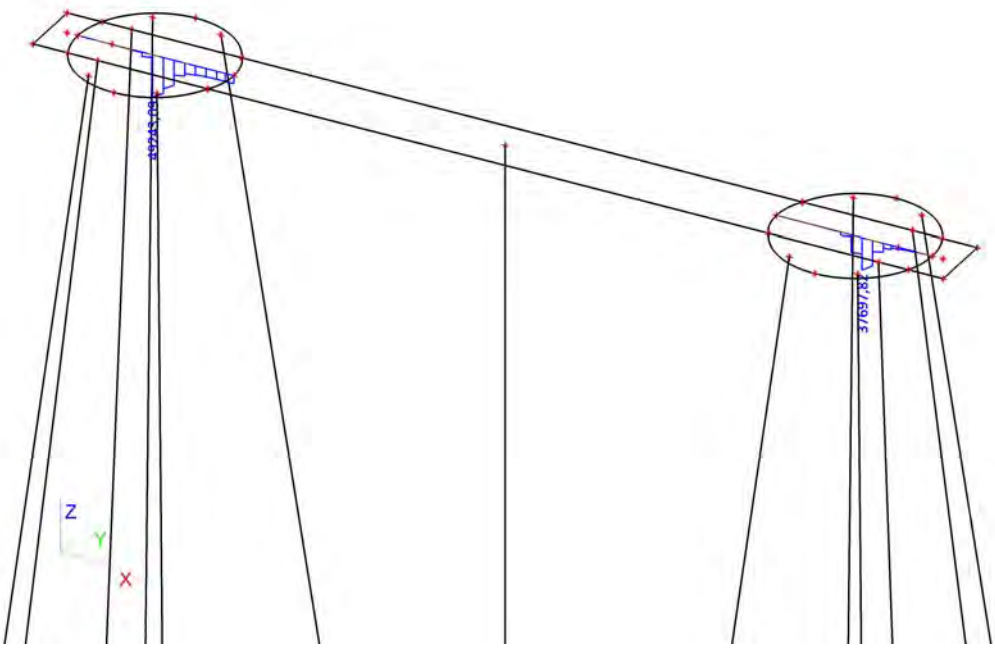

17. 2D element - Interne krachten; myD+

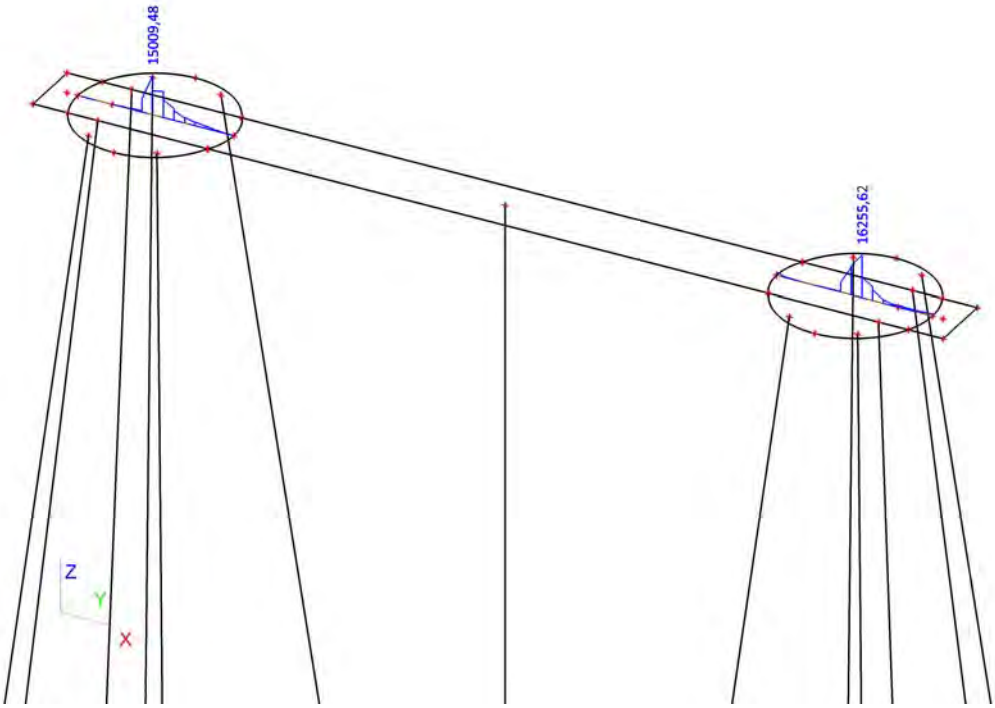

18. 2D element - Interne krachten; myD-

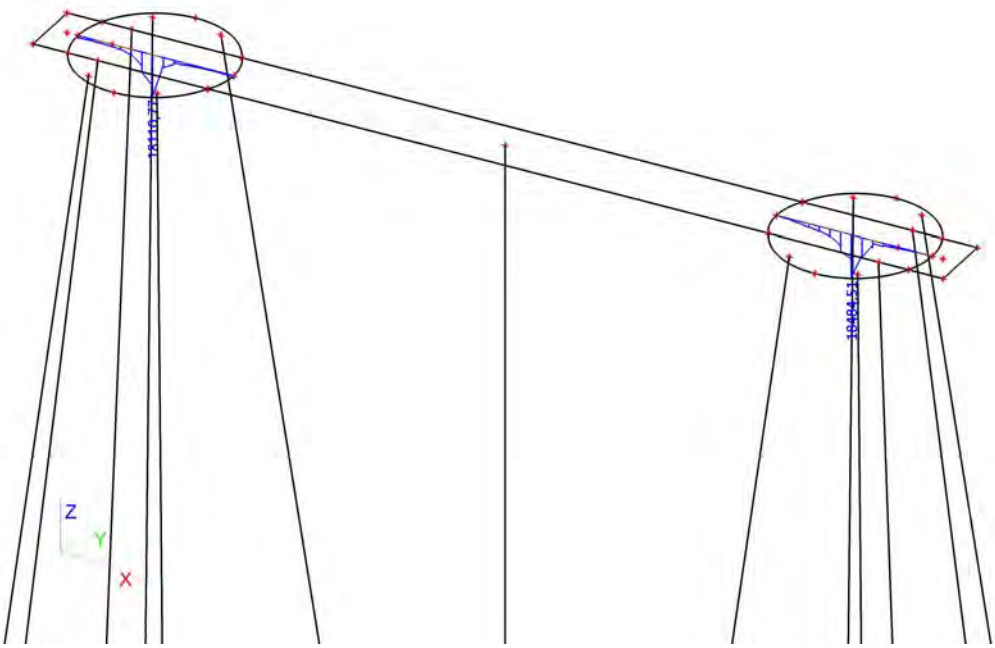

19. 2D element - Interne krachten; vx

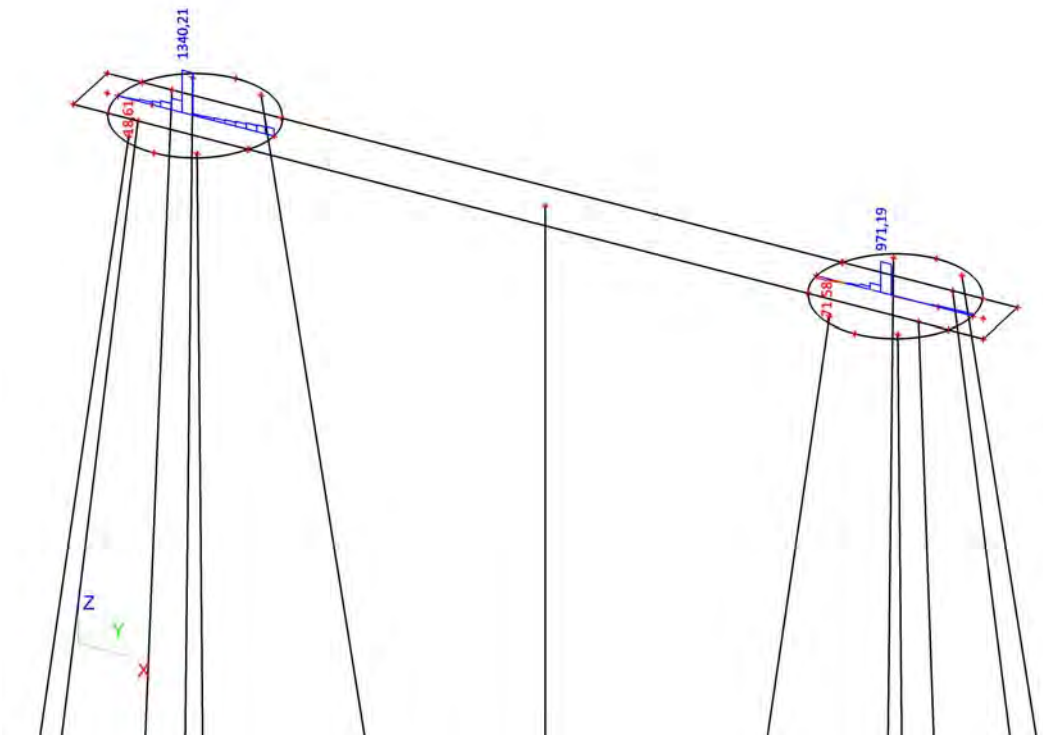

20. 2D element - Interne krachten; vy

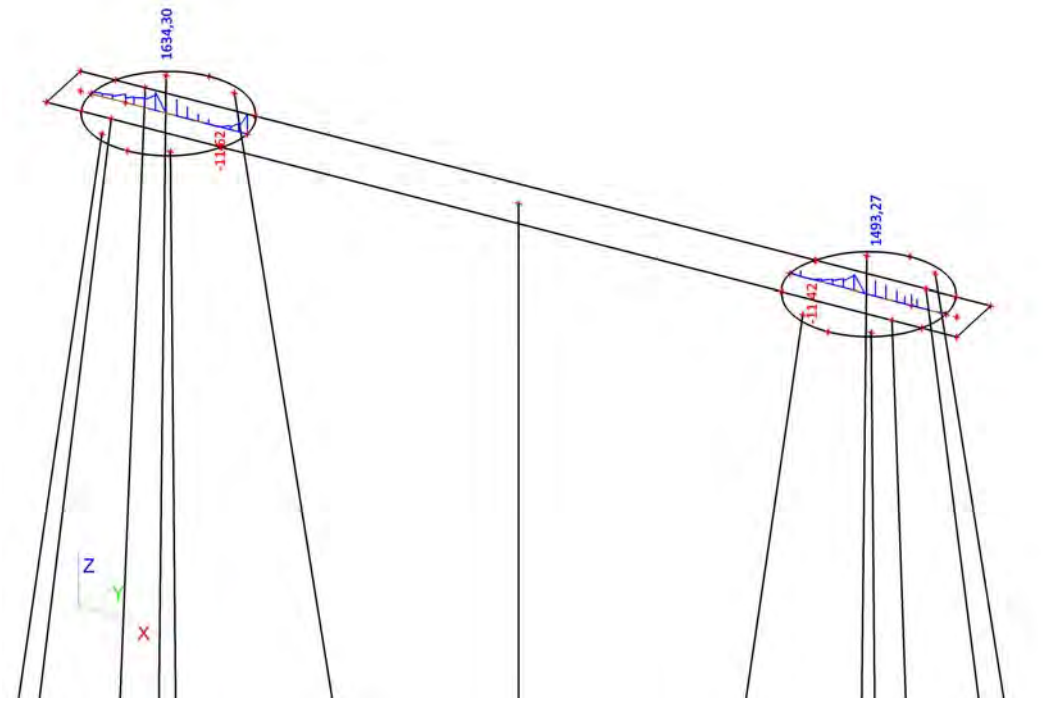

BIJLAGE 2 UITVOER SCIA ENGINEER – MATIGE-WAARDE

1. Inhoudsopgave

1. Inhoudsopgave	1
2. Overzicht	2
3. Materialen	2
4. Doorsneden	2
5. Knoop	3
6. 1D-staaf	3
7. 2D-element	3
8. Subregio	3
9. Knoopondersteuningen	4
10. Lijnondersteuning op staaf	4
11. Belastingsgevallen	6
11.1. Belastingsgevallen - BG1	6
11.1.1. Belasting grafisch	6
11.2. Belastingsgevallen - BG3	6
11.2.1. Vrije puntmomenten	7
11.2.2. Genereer vrije lasten	7
11.2.3. Belasting grafisch	8
11.3. Belastingsgevallen - BG2	8
11.3.1. Lasten op oppervlak	8
11.3.2. Belasting grafisch	9
11.4. Belastingsgevallen - BG4	9
11.4.1. Vrije puntmomenten	9
11.4.2. Genereer vrije lasten	9
11.4.3. Belasting grafisch	10
11.5. Belastingsgevallen - BG5	10
11.5.1. Vrije puntmomenten	10
11.5.2. Genereer vrije lasten	11
11.5.3. Belasting grafisch	11
11.6. Belastingsgevallen - BG6	12
11.6.1. Vrije puntmomenten	12
11.6.2. Genereer vrije lasten	12
11.6.3. Belasting grafisch	12
11.7. Belastingsgevallen - BG7	13
11.7.1. Lasten op oppervlak	13
11.7.2. Belasting grafisch	13
12. Combinaties	13
13. Verplaatsing van knopen SLS 1	14
14. Verplaatsing van knopen SLS 2	14
15. Reacties	14
16. 2D element - Interne krachten; mxD+	15
17. 2D element - Interne krachten; mxD-	15
18. 2D element - Interne krachten; myD+	16
19. 2D element - Interne krachten; myD-	16
20. 2D element - Interne krachten; vx	17
21. 2D element - Interne krachten; vy	17

2. Overzicht

3. Materialen

Naam	Type	Massa eenheid [kg/m³]	E-mod [MPa]	Poisson - nu	G-mod [MPa]	Thermisch uitz. [m/mK]	Karakteristieke cylinderdruksterkte fck(28) [MPa]
C30/37	Beton	2500,0	2,2000e+04	0,2	9,1667e+03	0,00	30,00
C35/45	Beton	2500,0	3,4100e+04	0,2	1,4208e+04	0,00	35,00

4. Doorsneden

Naam	CS1	
Type	Rechthoek	
Uitgebreid	450; 450	
Onderdeelmateriaal	C35/45	
Bouwwijze	Algemeen	
Knik y-y, z-z	b	b
EEM berekening	×	

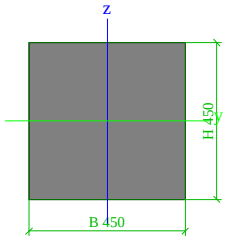

A [m²]	2,0250e-01	
A y, z [m²]	1,6875e-01	1,6875e-01
I y, z [m⁴]	3,4172e-03	3,4172e-03
I w [m⁶], t [m⁴]	0,0000e+00	5,7655e-03
Wel y, z [m³]	1,5188e-02	1,5188e-02
Wpl y, z [m³]	2,2781e-02	2,2781e-02
d y, z [mm]	0	0
c YLCS, ZLCS [mm]	225	225
alpha [deg]	0,00	
AL [m²/m]	1,8000e+00	

5. Knoop

Naam	Coördinaat X [m]	Coördinaat Y [m]	Coördinaat Z [m]
K47	0,400	0,750	0,000
K51	10,650	0,750	0,000
K52	10,650	0,750	-19,000
K81	0,100	-3,212	-19,000
K86	1,650	-0,662	0,000
K92	0,100	4,712	-19,000
K94	1,650	2,162	0,000
K143	0,000	0,000	0,000
K144	0,814	0,000	0,000
K145	4,086	0,000	0,000
K146	2,450	-1,050	0,000
K147	17,214	0,000	0,000
K148	20,486	0,000	0,000
K149	18,850	-1,050	0,000
K150	21,300	0,000	0,000
K151	21,300	1,500	0,000
K152	20,486	1,500	0,000
K153	17,214	1,500	0,000
K154	18,850	2,550	0,000
K155	4,086	1,500	0,000
K156	0,814	1,500	0,000
K157	2,450	2,550	0,000
K158	0,000	1,500	0,000
K159	0,650	0,750	0,000
K160	4,100	0,000	0,000
K161	4,100	1,500	0,000
K162	4,300	0,750	0,000
K163	17,200	1,500	0,000
K164	17,200	0,000	0,000
K165	17,000	0,750	0,000
K166	20,650	0,750	0,000
K167	1,450	0,750	0,000
K169	3,250	-0,662	0,000
K170	4,800	-3,212	-19,000
K171	3,250	2,162	0,000
K172	4,800	4,712	-19,000
K173	16,500	-3,212	-19,000
K174	16,500	4,712	-19,000
K175	21,200	-3,212	-19,000
K176	21,200	4,712	-19,000
K177	18,050	-0,662	0,000
K178	18,050	2,162	0,000
K179	19,650	-0,662	0,000
K180	19,650	2,162	0,000
K183	20,900	0,750	0,000
K184	19,850	0,750	0,000
K185	21,336	-1,550	-19,000
K187	21,336	3,050	-19,000
K188	19,786	0,000	0,000
K189	19,786	1,500	0,000
K190	-0,036	3,050	-19,000
K191	-0,036	-1,550	-19,000
K192	1,514	0,000	0,000
K193	1,514	1,500	0,000

6. 1D-staaf

Naam	Doorsnede	Lengte [m]	Vorm	Beginknoop	Eindknoop	Type	EEM-type	Laag
S3	CS1 - Rechthoek (450; 450)	19,000	Lijn	K51	K52	Algemeen (0)	standaard	Laag1
S19	CS1 - Rechthoek (450; 450)	19,233	Lijn	K86	K81	Algemeen (0)	standaard	Laag1
S24	CS1 - Rechthoek (450; 450)	19,233	Lijn	K94	K92	Algemeen (0)	standaard	Laag1
S50	CS1 - Rechthoek (450; 450)	19,233	Lijn	K169	K170	Algemeen (0)	standaard	Laag1
S51	CS1 - Rechthoek (450; 450)	19,233	Lijn	K171	K172	Algemeen (0)	standaard	Laag1
S52	CS1 - Rechthoek (450; 450)	19,233	Lijn	K177	K173	Algemeen (0)	standaard	Laag1
S53	CS1 - Rechthoek (450; 450)	19,233	Lijn	K178	K174	Algemeen (0)	standaard	Laag1
S54	CS1 - Rechthoek (450; 450)	19,233	Lijn	K179	K175	Algemeen (0)	standaard	Laag1
S55	CS1 - Rechthoek (450; 450)	19,233	Lijn	K180	K176	Algemeen (0)	standaard	Laag1
S56	CS1 - Rechthoek (450; 450)	19,126	Lijn	K188	K185	Algemeen (0)	standaard	Laag1
S58	CS1 - Rechthoek (450; 450)	19,126	Lijn	K189	K187	Algemeen (0)	standaard	Laag1
S59	CS1 - Rechthoek (450; 450)	19,126	Lijn	K193	K190	Algemeen (0)	standaard	Laag1
S60	CS1 - Rechthoek (450; 450)	19,126	Lijn	K192	K191	Algemeen (0)	standaard	Laag1

7. 2D-element

Naam	Materiaal	D. [mm]	Dikte type	Type	Laag
E2	C30/37	3000	konstant	vloer (90)	Laag1

8. Subregio

Naam, 2D-element, Materiaal, Dikte type	Regio3	E2	C30/37	konstant		
2D-element systeemvlak op, Exc. z [mm], D. [mm], Punt 4, Knoop, Rand, Gewicht	Boven	0		1800	K156 K157 K155	Cirkelboog Lijn
Naam, 2D-element, Materiaal, Dikte type	Regio4	E2	C30/37	konstant		
2D-element systeemvlak op, Exc. z [mm], D. [mm], Punt 4, Knoop, Rand, Gewicht	Boven	0		1800	K144 K145 K146	Lijn Cirkelboog
Naam, 2D-element, Materiaal, Dikte type	Regio6	E2	C30/37	konstant		
2D-element systeemvlak op, Exc. z [mm], D. [mm], Punt 4, Knoop, Rand, Gewicht	Boven	0		1800	K153 K154 K152	Cirkelboog Lijn
Naam, 2D-element, Materiaal, Dikte type	Regio7	E2	C30/37	konstant		
2D-element systeemvlak op, Exc. z [mm], D. [mm], Punt 4, Knoop, Rand, Gewicht	Boven	0		1800	K147 K148 K149	Lijn Cirkelboog
Naam, 2D-element, Materiaal, Dikte type	Regio8	E2	C30/37	konstant		
2D-element systeemvlak op, Exc. z [mm], D. [mm], Punt 4, Knoop, Rand, Gewicht	Onder	0		1200	K158 K156 K159 K144 K143	Lijn Cirkelboog Lijn Lijn
Naam, 2D-element, Materiaal, Dikte type	Regio9	E2	C30/37	konstant		
2D-element systeemvlak op, Exc. z [mm], D. [mm], Punt 4, Knoop, Rand, Gewicht	Onder	0		1200	K160 K162 K161	Cirkelboog Lijn

2D-element systeemvlak op, Exc. z [mm], D. [mm], Punt 4, Knoop, Rand, Gewicht	Onder	0		1200	K163 K165 K164	Cirkelboog Lijn
Naam, 2D-element, Materiaal, Dikte type	Regio10	E2	C30/37	konstant		
2D-element systeemvlak op, Exc. z [mm], D. [mm], Punt 4, Knoop, Rand, Gewicht	Onder	0		1200	K152 K151 K150 K148 K166	Lijn Lijn Lijn Cirkelboog

9. Knoopondersteuningen

Naam	Knoop	Systeem	Type	X	Y	Z	Stijfheid Z [MN/m]	Rx	Ry	Rz
Sn3	K52	GCS	Standaard	Vast	Vast	Verend	1,2000e+02	Vrij	Vrij	Vrij
Sn9	K81	GCS	Standaard	Vast	Vast	Verend	1,2000e+02	Vrij	Vrij	Vrij
Sn14	K92	GCS	Standaard	Vast	Vast	Verend	1,2000e+02	Vrij	Vrij	Vrij
Sn41	K173	GCS	Standaard	Vast	Vast	Verend	1,2000e+02	Vrij	Vrij	Vrij
Sn42	K174	GCS	Standaard	Vast	Vast	Verend	1,2000e+02	Vrij	Vrij	Vrij
Sn45	K172	GCS	Standaard	Vast	Vast	Verend	1,2000e+02	Vrij	Vrij	Vrij
Sn46	K170	GCS	Standaard	Vast	Vast	Verend	1,2000e+02	Vrij	Vrij	Vrij
Sn47	K176	GCS	Standaard	Vast	Vast	Verend	1,2000e+02	Vrij	Vrij	Vrij
Sn49	K175	GCS	Standaard	Vast	Vast	Verend	1,2000e+02	Vrij	Vrij	Vrij
Sn50	K185	GCS	Standaard	Vast	Vast	Verend	1,2000e+02	Vrij	Vrij	Vrij
Sn52	K187	GCS	Standaard	Vast	Vast	Verend	1,2000e+02	Vrij	Vrij	Vrij
Sn53	K190	GCS	Standaard	Vast	Vast	Verend	1,2000e+02	Vrij	Vrij	Vrij
Sn54	K191	GCS	Standaard	Vast	Vast	Verend	1,2000e+02	Vrij	Vrij	Vrij

10. Lijnondersteuning op staaf

Staaf	Naam Systeem	Pos x_1 [m] Pos x_2 [m]	Coör Oors	X	Y	Stijfheid Y [MN/m²]	Z	Stijfheid Z [MN/m²]	Rx	Ry	Rz
S3	Slb43 LCS	0,900 6,400	Abso Vanaf begin	Vrij	Verend	6,0000e+00	Verend	6,0000e+00	Vrij	Vrij	Vrij
S3	Slb163 LCS	12,900 22,000	Abso Vanaf begin	Vrij	Verend	1,4400e+01	Verend	1,4400e+01	Vrij	Vrij	Vrij
S3	Slb83 LCS	6,400 10,900	Abso Vanaf begin	Vrij	Verend	1,2000e+00	Verend	1,2000e+00	Vrij	Vrij	Vrij
S3	Slb3 LCS	0,000 0,900	Abso Vanaf begin	Vrij	Verend	1,2000e+00	Verend	1,2000e+00	Vrij	Vrij	Vrij
S3	Slb123 LCS	10,900 12,900	Abso Vanaf begin	Vrij	Verend	7,2000e+00	Verend	7,2000e+00	Vrij	Vrij	Vrij
S19	Slb97 LCS	6,400 10,900	Abso Vanaf begin	Vrij	Verend	1,2000e+00	Verend	1,2000e+00	Vrij	Vrij	Vrij
S19	Slb137 LCS	10,900 12,900	Abso Vanaf begin	Vrij	Verend	7,2000e+00	Verend	7,2000e+00	Vrij	Vrij	Vrij
S19	Slb17 LCS	0,000 0,900	Abso Vanaf begin	Vrij	Verend	1,2000e+00	Verend	1,2000e+00	Vrij	Vrij	Vrij
S19	Slb57 LCS	0,900 6,400	Abso Vanaf begin	Vrij	Verend	6,0000e+00	Verend	6,0000e+00	Vrij	Vrij	Vrij
S19	Slb177 LCS	12,900 22,000	Abso Vanaf begin	Vrij	Verend	1,4400e+01	Verend	1,4400e+01	Vrij	Vrij	Vrij
S24	Slb182 LCS	12,900 22,000	Abso Vanaf begin	Vrij	Verend	1,4400e+01	Verend	1,4400e+01	Vrij	Vrij	Vrij
S24	Slb142 LCS	10,900 12,900	Abso Vanaf begin	Vrij	Verend	7,2000e+00	Verend	7,2000e+00	Vrij	Vrij	Vrij
S24	Slb22 LCS	0,000 0,900	Abso Vanaf begin	Vrij	Verend	1,2000e+00	Verend	1,2000e+00	Vrij	Vrij	Vrij
S24	Slb62 LCS	0,900 6,400	Abso Vanaf begin	Vrij	Verend	6,0000e+00	Verend	6,0000e+00	Vrij	Vrij	Vrij
S24	Slb102 LCS	6,400 10,900	Abso Vanaf begin	Vrij	Verend	1,2000e+00	Verend	1,2000e+00	Vrij	Vrij	Vrij
S50	Slb209 LCS	10,900 12,900	Abso Vanaf begin	Vrij	Verend	7,2000e+00	Verend	7,2000e+00	Vrij	Vrij	Vrij
S50	Slb210 LCS	12,900 22,000	Abso Vanaf begin	Vrij	Verend	1,4400e+01	Verend	1,4400e+01	Vrij	Vrij	Vrij
S50	Slb208 LCS	6,400 10,900	Abso Vanaf begin	Vrij	Verend	1,2000e+00	Verend	1,2000e+00	Vrij	Vrij	Vrij
S50	Slb206 LCS	0,000 0,900	Abso Vanaf begin	Vrij	Verend	1,2000e+00	Verend	1,2000e+00	Vrij	Vrij	Vrij
S50	Slb207 LCS	0,900 6,400	Abso Vanaf begin	Vrij	Verend	6,0000e+00	Verend	6,0000e+00	Vrij	Vrij	Vrij

Staaf	Naam Systeem	Pos x_1 [m] Pos x_2 [m]	Coör Oors	X	Y	Stijfheid Y [MN/m²]	Z	Stijfheid Z [MN/m²]	Rx	Ry	Rz
S51	Slb214 LCS	10,900 12,900	Abso Vanaf begin	Vrij	Verend	7,2000e+00	Verend	7,2000e+00	Vrij	Vrij	Vrij
S51	Slb215 LCS	12,900 22,000	Abso Vanaf begin	Vrij	Verend	1,4400e+01	Verend	1,4400e+01	Vrij	Vrij	Vrij
S51	Slb213 LCS	6,400 10,900	Abso Vanaf begin	Vrij	Verend	1,2000e+00	Verend	1,2000e+00	Vrij	Vrij	Vrij
S51	Slb211 LCS	0,000 0,900	Abso Vanaf begin	Vrij	Verend	1,2000e+00	Verend	1,2000e+00	Vrij	Vrij	Vrij
S51	Slb212 LCS	0,900 6,400	Abso Vanaf begin	Vrij	Verend	6,0000e+00	Verend	6,0000e+00	Vrij	Vrij	Vrij
S52	Slb219 LCS	10,900 12,900	Abso Vanaf begin	Vrij	Verend	7,2000e+00	Verend	7,2000e+00	Vrij	Vrij	Vrij
S52	Slb220 LCS	12,900 22,000	Abso Vanaf begin	Vrij	Verend	1,4400e+01	Verend	1,4400e+01	Vrij	Vrij	Vrij
S52	Slb218 LCS	6,400 10,900	Abso Vanaf begin	Vrij	Verend	1,2000e+00	Verend	1,2000e+00	Vrij	Vrij	Vrij
S52	Slb216 LCS	0,000 0,900	Abso Vanaf begin	Vrij	Verend	1,2000e+00	Verend	1,2000e+00	Vrij	Vrij	Vrij
S52	Slb217 LCS	0,900 6,400	Abso Vanaf begin	Vrij	Verend	6,0000e+00	Verend	6,0000e+00	Vrij	Vrij	Vrij
S53	Slb224 LCS	10,900 12,900	Abso Vanaf begin	Vrij	Verend	7,2000e+00	Verend	7,2000e+00	Vrij	Vrij	Vrij
S53	Slb225 LCS	12,900 22,000	Abso Vanaf begin	Vrij	Verend	1,4400e+01	Verend	1,4400e+01	Vrij	Vrij	Vrij
S53	Slb223 LCS	6,400 10,900	Abso Vanaf begin	Vrij	Verend	1,2000e+00	Verend	1,2000e+00	Vrij	Vrij	Vrij
S53	Slb221 LCS	0,000 0,900	Abso Vanaf begin	Vrij	Verend	1,2000e+00	Verend	1,2000e+00	Vrij	Vrij	Vrij
S53	Slb222 LCS	0,900 6,400	Abso Vanaf begin	Vrij	Verend	6,0000e+00	Verend	6,0000e+00	Vrij	Vrij	Vrij
S54	Slb229 LCS	10,900 12,900	Abso Vanaf begin	Vrij	Verend	7,2000e+00	Verend	7,2000e+00	Vrij	Vrij	Vrij
S54	Slb230 LCS	12,900 22,000	Abso Vanaf begin	Vrij	Verend	1,4400e+01	Verend	1,4400e+01	Vrij	Vrij	Vrij
S54	Slb228 LCS	6,400 10,900	Abso Vanaf begin	Vrij	Verend	1,2000e+00	Verend	1,2000e+00	Vrij	Vrij	Vrij
S54	Slb226 LCS	0,000 0,900	Abso Vanaf begin	Vrij	Verend	1,2000e+00	Verend	1,2000e+00	Vrij	Vrij	Vrij
S54	Slb227 LCS	0,900 6,400	Abso Vanaf begin	Vrij	Verend	6,0000e+00	Verend	6,0000e+00	Vrij	Vrij	Vrij
S55	Slb234 LCS	10,900 12,900	Abso Vanaf begin	Vrij	Verend	7,2000e+00	Verend	7,2000e+00	Vrij	Vrij	Vrij
S55	Slb235 LCS	12,900 22,000	Abso Vanaf begin	Vrij	Verend	1,4400e+01	Verend	1,4400e+01	Vrij	Vrij	Vrij
S55	Slb233 LCS	6,400 10,900	Abso Vanaf begin	Vrij	Verend	1,2000e+00	Verend	1,2000e+00	Vrij	Vrij	Vrij
S55	Slb231 LCS	0,000 0,900	Abso Vanaf begin	Vrij	Verend	1,2000e+00	Verend	1,2000e+00	Vrij	Vrij	Vrij
S55	Slb232 LCS	0,900 6,400	Abso Vanaf begin	Vrij	Verend	6,0000e+00	Verend	6,0000e+00	Vrij	Vrij	Vrij
S56	Slb239 LCS	10,900 12,900	Abso Vanaf begin	Vrij	Verend	7,2000e+00	Verend	7,2000e+00	Vrij	Vrij	Vrij
S56	Slb240 LCS	12,900 22,000	Abso Vanaf begin	Vrij	Verend	1,4400e+01	Verend	1,4400e+01	Vrij	Vrij	Vrij
S56	Slb238 LCS	6,400 10,900	Abso Vanaf begin	Vrij	Verend	1,2000e+00	Verend	1,2000e+00	Vrij	Vrij	Vrij
S56	Slb236 LCS	0,000 0,900	Abso Vanaf begin	Vrij	Verend	1,2000e+00	Verend	1,2000e+00	Vrij	Vrij	Vrij
S56	Slb237 LCS	0,900 6,400	Abso Vanaf begin	Vrij	Verend	6,0000e+00	Verend	6,0000e+00	Vrij	Vrij	Vrij
S58	Slb249 LCS	10,900 12,900	Abso Vanaf begin	Vrij	Verend	7,2000e+00	Verend	7,2000e+00	Vrij	Vrij	Vrij
S58	Slb250 LCS	12,900 22,000	Abso Vanaf begin	Vrij	Verend	1,4400e+01	Verend	1,4400e+01	Vrij	Vrij	Vrij
S58	Slb248 LCS	6,400 10,900	Abso Vanaf begin	Vrij	Verend	1,2000e+00	Verend	1,2000e+00	Vrij	Vrij	Vrij
S58	Slb246 LCS	0,000 0,900	Abso Vanaf begin	Vrij	Verend	1,2000e+00	Verend	1,2000e+00	Vrij	Vrij	Vrij
S58	Slb247 LCS	0,900 6,400	Abso Vanaf begin	Vrij	Verend	6,0000e+00	Verend	6,0000e+00	Vrij	Vrij	Vrij
S59	Slb254 LCS	10,900 12,900	Abso Vanaf begin	Vrij	Verend	7,2000e+00	Verend	7,2000e+00	Vrij	Vrij	Vrij

Staaf	Naam Systeem	Pos x_1 [m] Pos x_2 [m]	Coör Oors	X	Y	Stijfheid Y [MN/m²]	Z	Stijfheid Z [MN/m²]	Rx	Ry	Rz
S59	Slb255 LCS	12,900 22,000	Abso Vanaf begin	Vrij	Verend	1,4400e+01	Verend	1,4400e+01	Vrij	Vrij	Vrij
S59	Slb253 LCS	6,400 10,900	Abso Vanaf begin	Vrij	Verend	1,2000e+00	Verend	1,2000e+00	Vrij	Vrij	Vrij
S59	Slb251 LCS	0,000 0,900	Abso Vanaf begin	Vrij	Verend	1,2000e+00	Verend	1,2000e+00	Vrij	Vrij	Vrij
S59	Slb252 LCS	0,900 6,400	Abso Vanaf begin	Vrij	Verend	6,0000e+00	Verend	6,0000e+00	Vrij	Vrij	Vrij
S60	Slb259 LCS	10,900 12,900	Abso Vanaf begin	Vrij	Verend	7,2000e+00	Verend	7,2000e+00	Vrij	Vrij	Vrij
S60	Slb260 LCS	12,900 22,000	Abso Vanaf begin	Vrij	Verend	1,4400e+01	Verend	1,4400e+01	Vrij	Vrij	Vrij
S60	Slb258 LCS	6,400 10,900	Abso Vanaf begin	Vrij	Verend	1,2000e+00	Verend	1,2000e+00	Vrij	Vrij	Vrij
S60	Slb256 LCS	0,000 0,900	Abso Vanaf begin	Vrij	Verend	1,2000e+00	Verend	1,2000e+00	Vrij	Vrij	Vrij
S60	Slb257 LCS	0,900 6,400	Abso Vanaf begin	Vrij	Verend	6,0000e+00	Verend	6,0000e+00	Vrij	Vrij	Vrij

11. Belastingsgevallen

11.1. Belastingsgevallen - BG1

Naam	Omschrijving	Actie type	Lastgroep	Belastingtype	Richting
BG1	Eigengewicht	Permanent	LG8	Eigen gewicht	-Z

11.1.1. Belasting grafisch

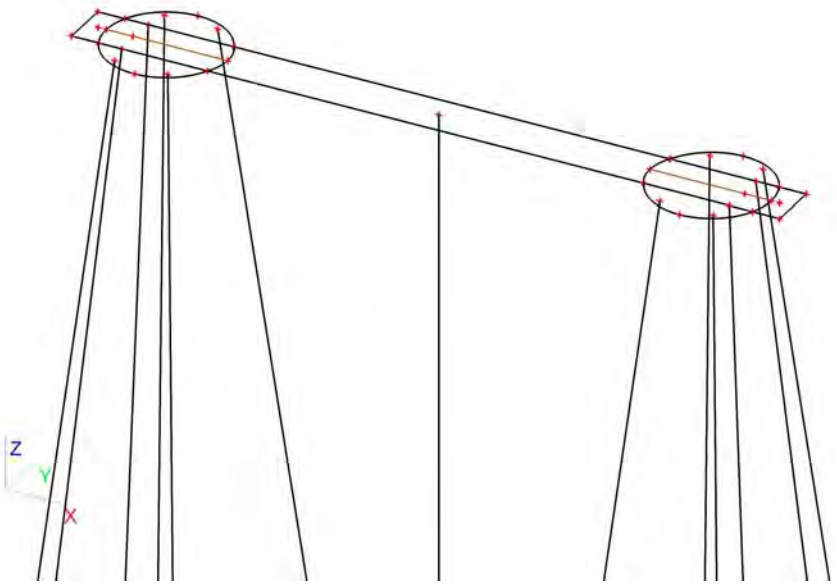

11.2. Belastingsgevallen - BG3

Naam	Omschrijving	Actie type	Lastgroep	Belastingtype	Spec	Duur	'Master' belastingsgeval
BG3	ULS 1	Variabel	LG7	Statisch	Standaard	Kort	Geen

11.2.1. Vrije puntmomenten

Typenaam	Naam	Rich	Type	Geldigheid	Selecteer	Waarde - F [kNm]	Belastingsgeval	Coördinaat X [m]	Coördinaat Y [m]	Coördinaat Z [m]	Coördinaat ux [m]	Coördinaat uy [m]	Coördinaat uz [m]	Systeem
Vrij puntmoment	FM1	Mx	Moment	Alle	Auto	-5841,00	BG3 - ULS 1	2,450	0,750	0,000	2,450	0,750	0,000	GCS
Vrij puntmoment	FM2	Mx	Moment	Alle	Auto	-5841,00	BG3 - ULS 1	18,850	0,750	0,000	18,850	0,750	0,000	GCS
Vrij puntmoment	FM3	My	Moment	Alle	Auto	547,00	BG3 - ULS 1	2,450	0,750	0,000	2,450	0,750	0,000	GCS
Vrij puntmoment	FM4	My	Moment	Alle	Auto	547,00	BG3 - ULS 1	18,850	0,750	0,000	18,850	0,750	0,000	GCS
Vrij puntmoment	FM5	Mx	Moment	Alle	Auto	415,65	BG3 - ULS 1	2,450	0,750	0,000	2,450	0,750	0,000	GCS
Vrij puntmoment	FM6	Mx	Moment	Alle	Auto	415,65	BG3 - ULS 1	18,850	0,750	0,000	18,850	0,750	0,000	GCS
Vrij puntmoment	FM7	My	Moment	Alle	Auto	0,00	BG3 - ULS 1	2,450	0,750	0,000	-13,960	0,757	0,000	GCS
Vrij puntmoment	FM8	My	Moment	Alle	Auto	0,00	BG3 - ULS 1	18,850	0,750	0,000	2,440	0,757	0,000	GCS

11.2.2. Genereer vrije lasten

Naam	Belastingsgeval	2D-element	Rich	Belastingstype Type	Oorspronkelijke belasting	Waarde - F [kN] Waarde - F [kNm]	Systeem Locatie
GFF1	BG3 - ULS 1	E2	Z	Punt Kracht	FF1	-921,00	GCS Lengte
GFF4	BG3 - ULS 1	E2	Z	Punt Kracht	FF2	-921,00	GCS Lengte
GFF5	BG3 - ULS 1	E2	Mx	Punt Moment	FM6	415,65	GCS Lengte
GFF6	BG3 - ULS 1	E2	Y	Punt Kracht	FF3	163,00	GCS Lengte
GFF7	BG3 - ULS 1	E2	X	Punt Kracht	FF5	0,00	GCS Lengte
GFF9	BG3 - ULS 1	E2	Y	Punt Kracht	FF4	163,00	GCS Lengte
GFF10	BG3 - ULS 1	E2	X	Punt Kracht	FF6	0,00	GCS Lengte
GFF25	BG3 - ULS 1	E2	My	Punt Moment	FM7	0,00	GCS Lengte
GFF27	BG3 - ULS 1	E2	My	Punt Moment	FM8	0,00	GCS Lengte
GFF41	BG3 - ULS 1	E2	Mx	Punt Moment	FM1	-5841,00	GCS Lengte
GFF42	BG3 - ULS 1	E2	Mx	Punt Moment	FM2	-5841,00	GCS Lengte
GFF43	BG3 - ULS 1	E2	My	Punt Moment	FM3	547,00	GCS Lengte
GFF44	BG3 - ULS 1	E2	My	Punt Moment	FM4	547,00	GCS Lengte
GFF45	BG3 - ULS 1	E2	Mx	Punt Moment	FM5	415,65	GCS Lengte

11.2.3. Belasting grafisch

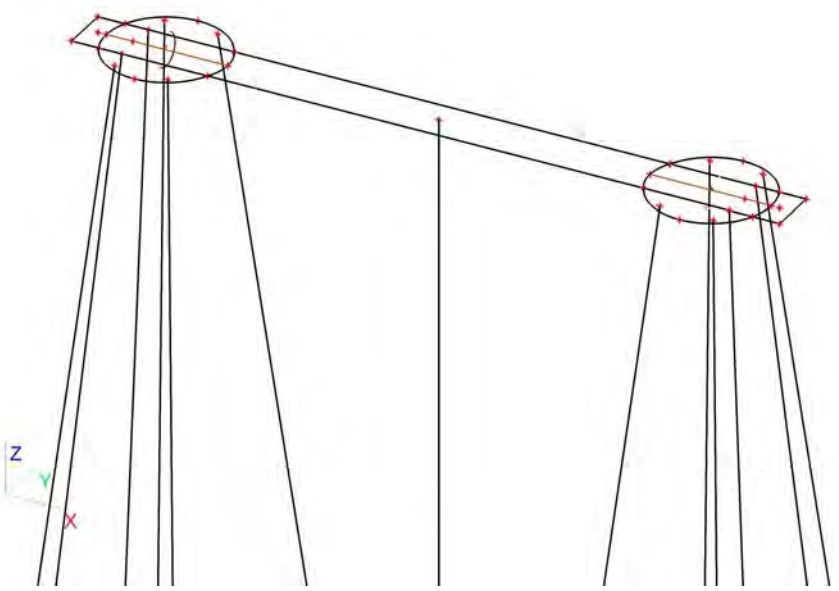

11.3. Belastingsgevallen - BG2

Naam	Omschrijving	Actie type	Lastgroep	Belastingtype
BG2	Grond	Permanent	LG8	Standaard

11.3.1. Lasten op oppervlak

Naam	Rich	Type	Waarde [kN/m²]	Belastingsgeval	Systeem	Loc
SF1	Z	Kracht	-25,50	BG2 - Grond	LCS	Lengte
SF2	Z	Kracht	-25,50	BG2 - Grond	LCS	Lengte
SF3	Z	Kracht	-25,50	BG2 - Grond	LCS	Lengte

11.3.2. Belasting grafisch

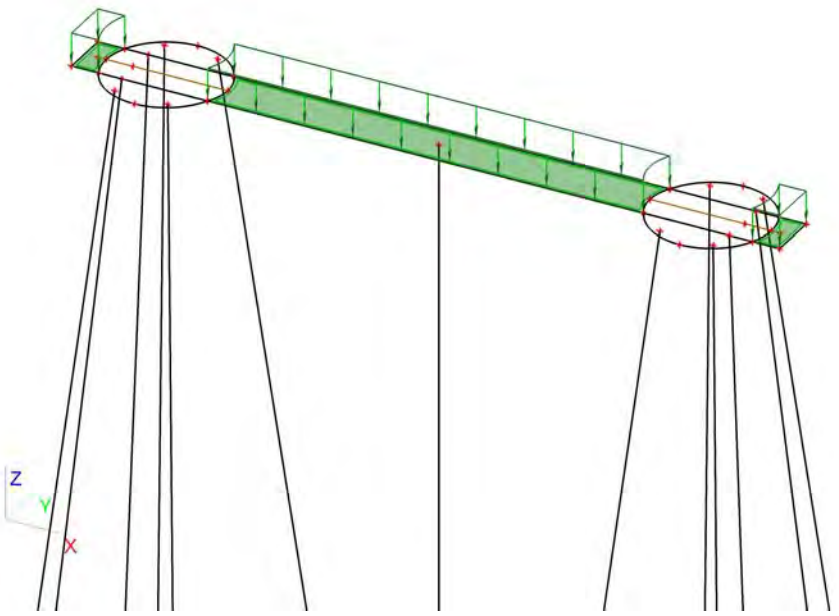

11.4. Belastingsgevallen - BG4

Naam	Omschrijving	Actie type	Lastgroep	Belastingtype	Spec	Duur	'Master' belastingsgeval
BG4	ULS 2	Variabel	LG9	Statisch	Standaard	Kort	Geen

11.4.1. Vrije puntmomenten

Typenaam	Naam	Rich	Type	Geldigheid	Selecteer	Waarde - F [kNm]	Belastingsgeval	Coördinaat X [m]	Coördinaat Y [m]	Coördinaat Z [m]	Coördinaat ux [m]	Coördinaat uy [m]	Coördinaat uz [m]	Systeem
Vrij puntmoment	FM9	Mx	Moment	Alle	Auto	0,00	BG4 - ULS 2	2,450	0,750	0,000	3,703	0,750	0,000	GCS
Vrij puntmoment	FM10	Mx	Moment	Alle	Auto	0,00	BG4 - ULS 2	18,850	0,750	0,000	20,275	0,744	0,000	GCS
Vrij puntmoment	FM11	My	Moment	Alle	Auto	21005,00	BG4 - ULS 2	2,450	0,750	0,000	-12,525	0,744	0,000	GCS
Vrij puntmoment	FM12	My	Moment	Alle	Auto	21005,00	BG4 - ULS 2	18,850	0,750	0,000	3,703	0,750	0,000	GCS
Vrij puntmoment	FM13	Mx	Moment	Alle	Auto	0,00	BG4 - ULS 2	2,450	0,750	0,000	-13,950	0,750	0,000	GCS
Vrij puntmoment	FM14	Mx	Moment	Alle	Auto	0,00	BG4 - ULS 2	18,850	0,750	0,000	2,450	0,750	0,000	GCS
Vrij puntmoment	FM15	My	Moment	Alle	Auto	1050,60	BG4 - ULS 2	2,450	0,750	0,000	-13,950	0,750	0,000	GCS
Vrij puntmoment	FM16	My	Moment	Alle	Auto	1050,60	BG4 - ULS 2	18,850	0,750	0,000	2,450	0,750	0,000	GCS

11.4.2. Genereer vrije lasten

Naam	Belastingsgeval	2D-element	Rich	Belastingstype Type	Oorspronkelijke belasting	Waarde - F [kN] Waarde - F [kNm]	Systeem Locatie
GFF2	BG4 - ULS 2	E2	Y	Punt Kracht	FF9	0,00	GCS Lengte
GFF12	BG4 - ULS 2	E2	Z	Punt Kracht	FF7	-859,00	GCS Lengte
GFF13	BG4 - ULS 2	E2	Mx	Punt Moment	FM13	0,00	GCS Lengte
GFF14	BG4 - ULS 2	E2	Z	Punt Kracht	FF8	-859,00	GCS Lengte
GFF15	BG4 - ULS 2	E2	Mx	Punt Moment	FM14	0,00	GCS Lengte
GFF16	BG4 - ULS 2	E2	Y	Punt Kracht	FF10	0,00	GCS Lengte
GFF18	BG4 - ULS 2	E2	X	Punt Kracht	FF11	412,00	GCS Lengte
GFF19	BG4 - ULS 2	E2	X	Punt Kracht	FF12	412,00	GCS Lengte
GFF20	BG4 - ULS 2	E2	Mx	Punt Moment	FM10	0,00	GCS Lengte

Naam	Belastingsgeval	2D-element	Rich	Belastingstype Type	Oorspronkelijke belasting	Waarde - F [kN] Waarde - F [kNm]	Systeem Locatie
GFF22	BG4 - ULS 2	E2	My	Punt Moment	FM15	 1050,60	GCS Lengte
GFF24	BG4 - ULS 2	E2	My	Punt Moment	FM16	 1050,60	GCS Lengte
GFF29	BG4 - ULS 2	E2	My	Punt Moment	FM11	 21005,00	GCS Lengte
GFF31	BG4 - ULS 2	E2	My	Punt Moment	FM12	 21005,00	GCS Lengte
GFF46	BG4 - ULS 2	E2	Mx	Punt Moment	FM9	 0,00	GCS Lengte

11.4.3. Belasting grafisch

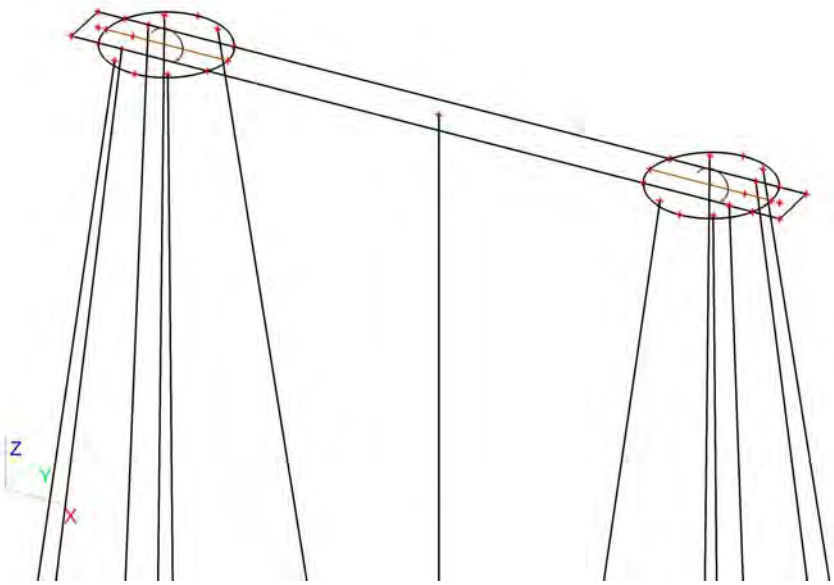

11.5. Belastingsgevallen - BG5

Naam	Omschrijving	Actie type	Lastgroep	Belastingtype	Spec	Duur	'Master' belastingsgeval
BG5	SLS 1	Variabel	LG9	Statisch	Standaard	Kort	Geen

11.5.1. Vrije puntmomenten

Typenaam	Naam	Rich	Type	Geldigheid	Selecteer	Waarde - F [kNm]	Belastingsgeval	Coördinaat X [m]	Coördinaat Y [m]	Coördinaat Z [m]	Coördinaat ux [m]	Coördinaat uy [m]	Coördinaat uz [m]	Systeem
Vrij puntmoment	FM17	Mx	Moment	Alle	Auto	-4314,00	BG5 - SLS 1	2,450	0,750	0,000	1,450	0,750	0,000	GCS
Vrij puntmoment	FM18	Mx	Moment	Alle	Auto	-4314,00	BG5 - SLS 1	18,850	0,750	0,000	17,850	0,750	0,000	GCS
Vrij puntmoment	FM19	My	Moment	Alle	Auto	9532,00	BG5 - SLS 1	2,450	0,750	0,000	1,450	0,750	0,000	GCS
Vrij puntmoment	FM20	My	Moment	Alle	Auto	9532,00	BG5 - SLS 1	18,850	0,750	0,000	17,850	0,750	0,000	GCS
Vrij puntmoment	FM21	Mx	Moment	Alle	Auto	295,80	BG5 - SLS 1	2,450	0,750	0,000	1,450	0,750	0,000	GCS
Vrij puntmoment	FM22	Mx	Moment	Alle	Auto	295,80	BG5 - SLS 1	18,850	0,750	0,000	17,850	0,750	0,000	GCS
Vrij puntmoment	FM23	My	Moment	Alle	Auto	295,80	BG5 - SLS 1	2,450	0,750	0,000	1,450	0,750	0,000	GCS
Vrij puntmoment	FM24	My	Moment	Alle	Auto	295,80	BG5 - SLS 1	18,850	0,750	0,000	17,850	0,750	0,000	GCS
Vrij puntmoment	FM29	Mx	Moment	Alle	Auto	267,75	BG5 - SLS 1	2,450	0,750	0,000	1,450	0,750	0,000	GCS
Vrij puntmoment	FM30	Mx	Moment	Alle	Auto	267,75	BG5 - SLS 1	18,850	0,750	0,000	17,850	0,750	0,000	GCS
Vrij puntmoment	FM31	My	Moment	Alle	Auto	708,90	BG5 - SLS 1	2,450	0,750	0,000	-14,960	0,757	0,000	GCS
Vrij puntmoment	FM32	My	Moment	Alle	Auto	708,90	BG5 - SLS 1	18,850	0,750	0,000	1,440	0,757	0,000	GCS

11.5.2. Genereer vrije lasten

Naam	Belastingsgeval	2D-element	Rich	Belastingstype Type	Oorspronkelijke belasting	Waarde - F [kN] Waarde - F [kNm]	Systeem Locatie
GFF3	BG5 - SLS 1	E2	My	Punt Moment	FM19	9532,00	GCS Lengte
GFF8	BG5 - SLS 1	E2	Mx	Punt Moment	FM17	-4314,00	GCS Lengte
GFF11	BG5 - SLS 1	E2	Mx	Punt Moment	FM18	-4314,00	GCS Lengte
GFF17	BG5 - SLS 1	E2	My	Punt Moment	FM20	9532,00	GCS Lengte
GFF21	BG5 - SLS 1	E2	Z	Punt Kracht	FF13	-726,00	GCS Lengte
GFF23	BG5 - SLS 1	E2	Z	Punt Kracht	FF14	-726,00	GCS Lengte
GFF26	BG5 - SLS 1	E2	Y	Punt Kracht	FF15	116,00	GCS Lengte
GFF28	BG5 - SLS 1	E2	Y	Punt Kracht	FF16	116,00	GCS Lengte
GFF30	BG5 - SLS 1	E2	X	Punt Kracht	FF17	197,00	GCS Lengte
GFF32	BG5 - SLS 1	E2	X	Punt Kracht	FF18	197,00	GCS Lengte
GFF38	BG5 - SLS 1	E2	Mx	Punt Moment	FM29	267,75	GCS Lengte
GFF40	BG5 - SLS 1	E2	Mx	Punt Moment	FM30	267,75	GCS Lengte
GFF47	BG5 - SLS 1	E2	Mx	Punt Moment	FM21	295,80	GCS Lengte
GFF48	BG5 - SLS 1	E2	Mx	Punt Moment	FM22	295,80	GCS Lengte
GFF49	BG5 - SLS 1	E2	My	Punt Moment	FM23	295,80	GCS Lengte
GFF50	BG5 - SLS 1	E2	My	Punt Moment	FM24	295,80	GCS Lengte
GFF55	BG5 - SLS 1	E2	My	Punt Moment	FM31	708,90	GCS Lengte
GFF56	BG5 - SLS 1	E2	My	Punt Moment	FM32	708,90	GCS Lengte

11.5.3. Belasting grafisch

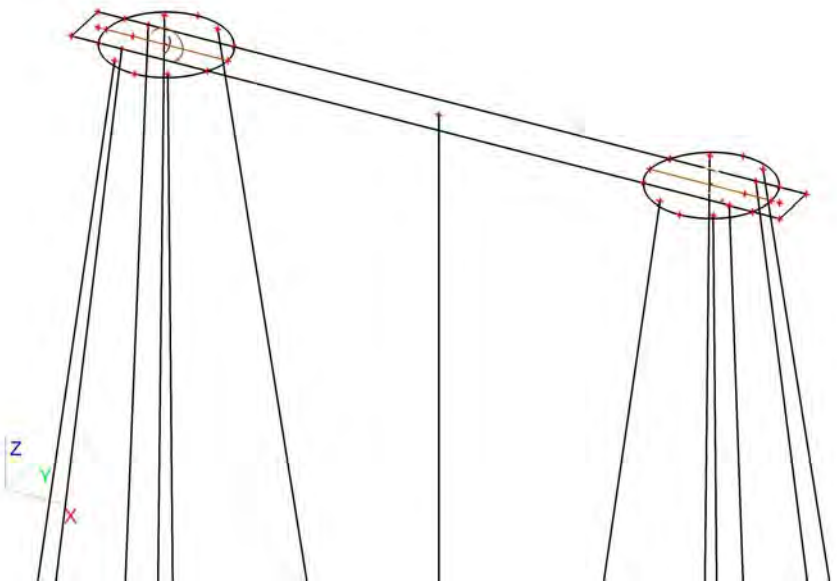

11.6. Belastingsgevallen - BG6

Naam	Omschrijving	Actie type	Lastgroep	Belastingtype	Spec	Duur	'Master' belastingsgeval
BG6	SLS 2	Variabel	LG9	Statisch	Standaard	Kort	Geen

11.6.1. Vrije puntmomenten

Typenaam	Naam	Rich	Type	Geldigheid	Selecteer	Waarde - F [kNm]	Belastingsgeval	Coördinaat X [m]	Coördinaat Y [m]	Coördinaat Z [m]	Coördinaat ux [m]	Coördinaat uy [m]	Coördinaat uz [m]	Systeem
Vrij puntmoment	FM25	Mx	Moment	Alle	Auto	-3672,00	BG6 - SLS 2	2,450	0,750	0,000	1,450	0,750	0,000	GCS
Vrij puntmoment	FM26	Mx	Moment	Alle	Auto	-3672,00	BG6 - SLS 2	18,850	0,750	0,000	17,850	0,750	0,000	GCS
Vrij puntmoment	FM27	My	Moment	Alle	Auto	14266,00	BG6 - SLS 2	2,450	0,750	0,000	1,450	0,750	0,000	GCS
Vrij puntmoment	FM28	My	Moment	Alle	Auto	14266,00	BG6 - SLS 2	18,850	0,750	0,000	17,850	0,750	0,000	GCS

11.6.2. Genereer vrije lasten

Naam	Belastingsgeval	2D-element	Rich	Belastingstype Type	Oorspronkelijke belasting	Waarde - F [kN] Waarde - F [kNm]	Systeem Locatie
GFF33	BG6 - SLS 2	E2	Z	Punt Kracht	FF19	-718,00	GCS Lengte
GFF34	BG6 - SLS 2	E2	Z	Punt Kracht	FF20	-718,00	GCS Lengte
GFF35	BG6 - SLS 2	E2	Y	Punt Kracht	FF21	105,00	GCS Lengte
GFF36	BG6 - SLS 2	E2	Y	Punt Kracht	FF22	105,00	GCS Lengte
GFF37	BG6 - SLS 2	E2	X	Punt Kracht	FF23	278,00	GCS Lengte
GFF39	BG6 - SLS 2	E2	X	Punt Kracht	FF24	278,00	GCS Lengte
GFF51	BG6 - SLS 2	E2	Mx	Punt Moment	FM25	-3672,00	GCS Lengte
GFF52	BG6 - SLS 2	E2	Mx	Punt Moment	FM26	-3672,00	GCS Lengte
GFF53	BG6 - SLS 2	E2	My	Punt Moment	FM27	14266,00	GCS Lengte
GFF54	BG6 - SLS 2	E2	My	Punt Moment	FM28	14266,00	GCS Lengte

11.6.3. Belasting grafisch

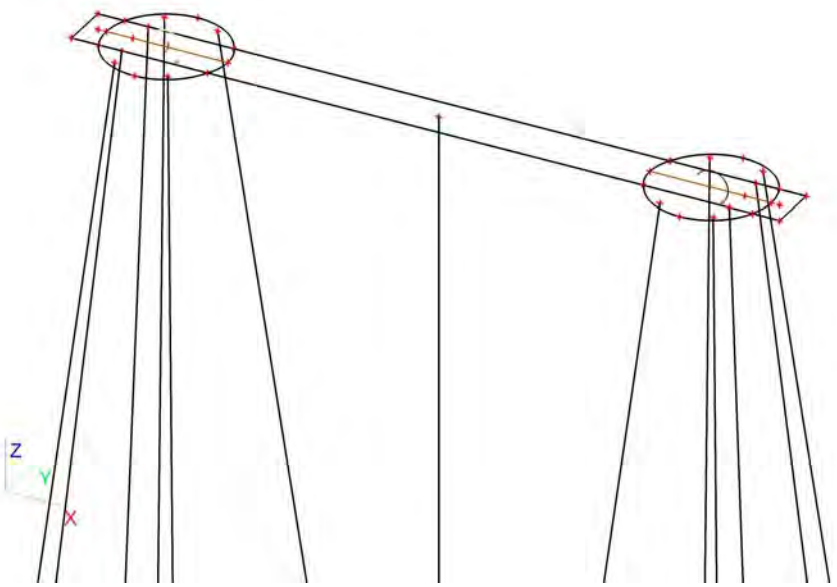

11.7. Belastingsgevallen - BG7

Naam	Omschrijving	Actie type	Lastgroep	Belastingtype	Spec	Duur	'Master' belastingsgeval
BG7	Belasting op maaiveld	Variabel	LG7	Statisch	Standaard	Kort	Geen

11.7.1. Lasten op oppervlak

Naam	Rich	Type	Waarde [kN/m²]	Belastingsgeval	Systeem	Loc
SF4	Z	Kracht	-10,00	BG7 - Belasting op maaiveld	LCS	Lengte
SF5	Z	Kracht	-10,00	BG7 - Belasting op maaiveld	LCS	Lengte
SF6	Z	Kracht	-10,00	BG7 - Belasting op maaiveld	LCS	Lengte

11.7.2. Belasting grafisch

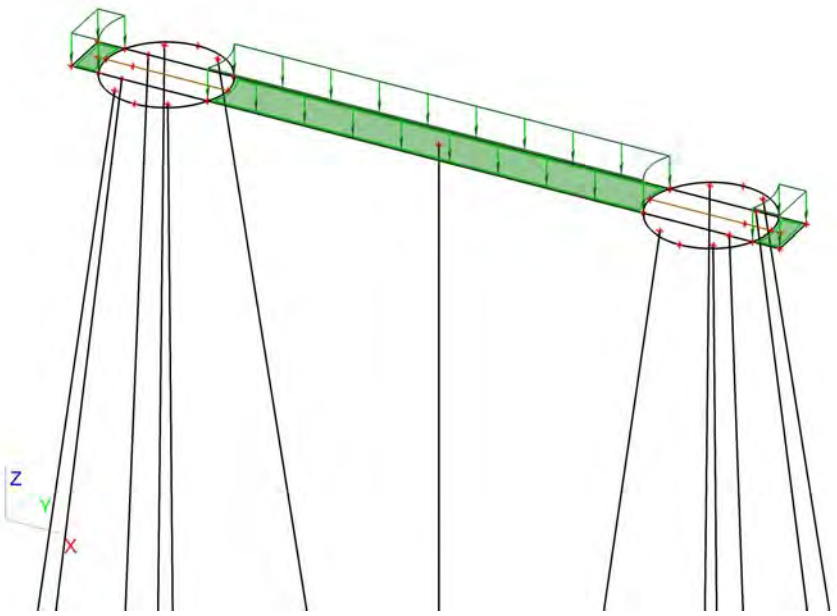

12. Combinaties

Naam	Type	Belastingsgevallen	Coëff. [-]
Combi1	Omhullende - uiterst	BG1 - Eigengewicht	1,30
		BG3 - ULS 1	1,00
		BG7 - Belasting op maaiveld	1,16
		BG2 - Grond	1,30
Combi2	Omhullende - uiterst	BG1 - Eigengewicht	1,30
		BG4 - ULS 2	1,00
		BG7 - Belasting op maaiveld	1,16
		BG2 - Grond	1,30
Combi3	Omhullende - uiterst	BG1 - Eigengewicht	1,30
		BG3 - ULS 1	0,60
		BG7 - Belasting op maaiveld	1,65
		BG2 - Grond	1,30
Combi4	Omhullende - uiterst	BG1 - Eigengewicht	1,30
		BG4 - ULS 2	0,60
		BG7 - Belasting op maaiveld	1,65
		BG2 - Grond	1,30
Combi5	Omhullende - uiterst	BG1 - Eigengewicht	0,54
		BG3 - ULS 1	1,00
		BG2 - Grond	0,54
Combi6	Omhullende -	BG1 - Eigengewicht	0,54

Naam	Type	Belastingsgevallen	Coëff. [-]
Combi6	Omhullende - uiterst	BG4 - ULS 2	1,00
		BG2 - Grond	0,54
Combi7	Omhullende - bruikbaarheid	BG1 - Eigengewicht	1,00
		BG5 - SLS 1	1,00
		BG7 - Belasting op maaiveld	1,16
		BG2 - Grond	1,00
Combi8	Omhullende - bruikbaarheid	BG1 - Eigengewicht	1,00
		BG6 - SLS 2	1,00
		BG7 - Belasting op maaiveld	0,70
		BG2 - Grond	1,00
Combi9	Omhullende - bruikbaarheid	BG1 - Eigengewicht	1,00
		BG5 - SLS 1	0,60
		BG7 - Belasting op maaiveld	1,00
		BG2 - Grond	1,00
Combi10	Omhullende - bruikbaarheid	BG1 - Eigengewicht	1,00
		BG6 - SLS 2	0,60
		BG7 - Belasting op maaiveld	1,00
		BG2 - Grond	1,00
Combi11	Omhullende - bruikbaarheid	BG1 - Eigengewicht	0,60
		BG5 - SLS 1	1,00
		BG2 - Grond	0,60
Combi12	Omhullende - bruikbaarheid	BG1 - Eigengewicht	0,60
		BG6 - SLS 2	1,00
		BG2 - Grond	0,60

13. Verplaatsing van knopen SLS 1

Lineaire berekening, Extreem : Globaal
Selectie : Alle
Belastingsgevallen : BG5

BG	Snede	elem	dx [m]	Ux [mm]	Uy [mm]	Uz [mm]	Fix [mrad]	Fiy [mrad]	Fiz [mrad]
BG5	Snede2	709	3,674	**5,3**	4,0	**-7,2**	-3,1	2,7	**1,1**
BG5	Snede1	28	3,000	**5,3**	4,1	-3,4	-3,1	2,6	-0,9
BG5	Snede2	150	3,650	5,3	**4,0**	-7,1	-3,1	2,7	1,1
BG5	Snede1	80	3,650	5,3	**4,1**	-5,1	-3,1	**2,5**	-0,9
BG5	Snede1	58	0,000	5,3	4,0	**4,6**	**-3,1**	2,7	**-1,1**
BG5	Snede1	23	1,750	5,3	4,1	-0,1	**-3,1**	**2,8**	-1,0

14. Verplaatsing van knopen SLS 2

Lineaire berekening, Extreem : Globaal
Selectie : Alle
Belastingsgevallen : BG6

BG	Snede	elem	dx [m]	Ux [mm]	Uy [mm]	Uz [mm]	Fix [mrad]	Fiy [mrad]	Fiz [mrad]
BG6	Snede2	709	3,674	**7,3**	3,9	**-9,3**	-3,0	3,7	**1,1**
BG6	Snede1	28	3,000	**7,4**	3,9	-4,2	-3,0	3,5	-0,9
BG6	Snede2	150	3,650	7,3	**3,9**	-9,2	-3,0	3,7	1,1
BG6	Snede1	80	3,650	7,4	**3,9**	-6,4	-3,0	**3,4**	-0,9
BG6	Snede1	58	0,000	7,4	3,9	**6,7**	**-3,0**	3,7	**-1,1**
BG6	Snede1	23	1,750	7,4	3,9	0,3	**-3,1**	**3,8**	-1,0

15. Reacties

Lineaire berekening, Extreem : Globaal
Selectie : Alle
Klasse : UGT

Steunpunt	BG	Rx [kN]	Ry [kN]	Rz [kN]	Mx [kNm]	My [kNm]	Mz [kNm]
Sn45/K172	Combi1/1	**-109,19**	**-179,70**	**1229,81**	0,00	0,00	0,00
Sn42/K174	Combi1/1	**108,11**	-177,92	1217,70	0,00	0,00	0,00
Sn49/K175	Combi2/2	-96,41	**158,10**	1083,03	0,00	0,00	0,00
Sn54/K191	Combi6/3	-44,75	-44,41	**-494,97**	0,00	0,00	0,00
Sn3/K52	Combi2/2	-0,46	0,00	984,90	**0,00**	0,00	0,00
Sn9/K81	Combi3/4	25,05	41,20	286,67	**0,00**	0,00	0,00
Sn3/K52	Combi4/5	-0,27	0,00	979,53	0,00	**0,00**	0,00
Sn41/K173	Combi3/4	41,08	67,60	466,55	0,00	**0,00**	0,00
Sn3/K52	Combi1/6	0,00	0,00	784,38	0,00	0,00	**0,00**

16. 2D element - Interne krachten; mxD+

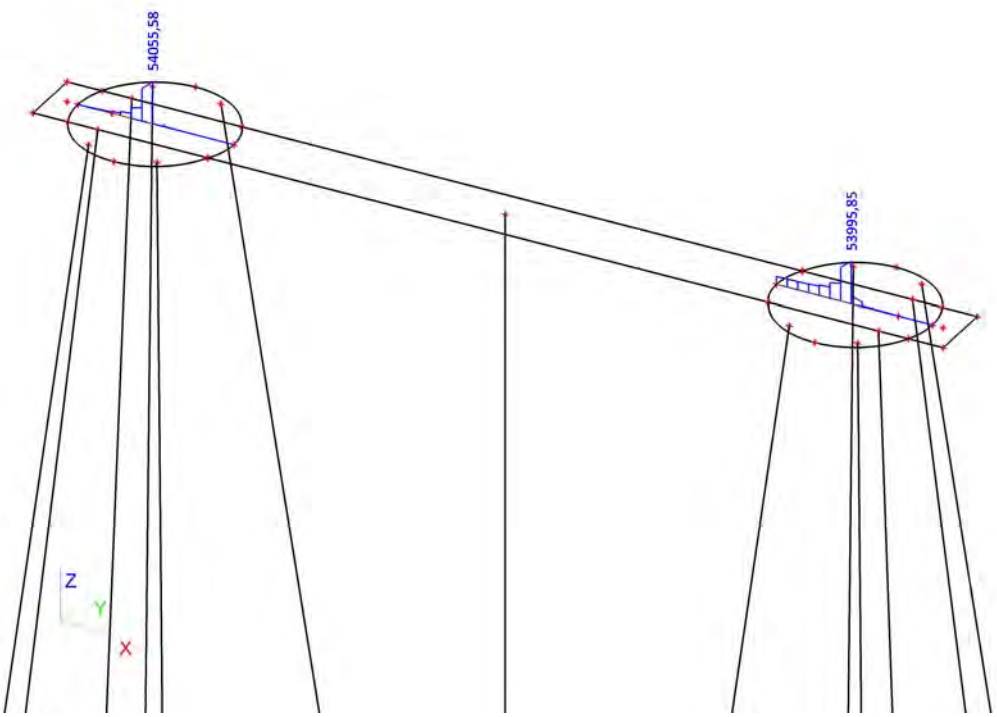

17. 2D element - Interne krachten; mxD-

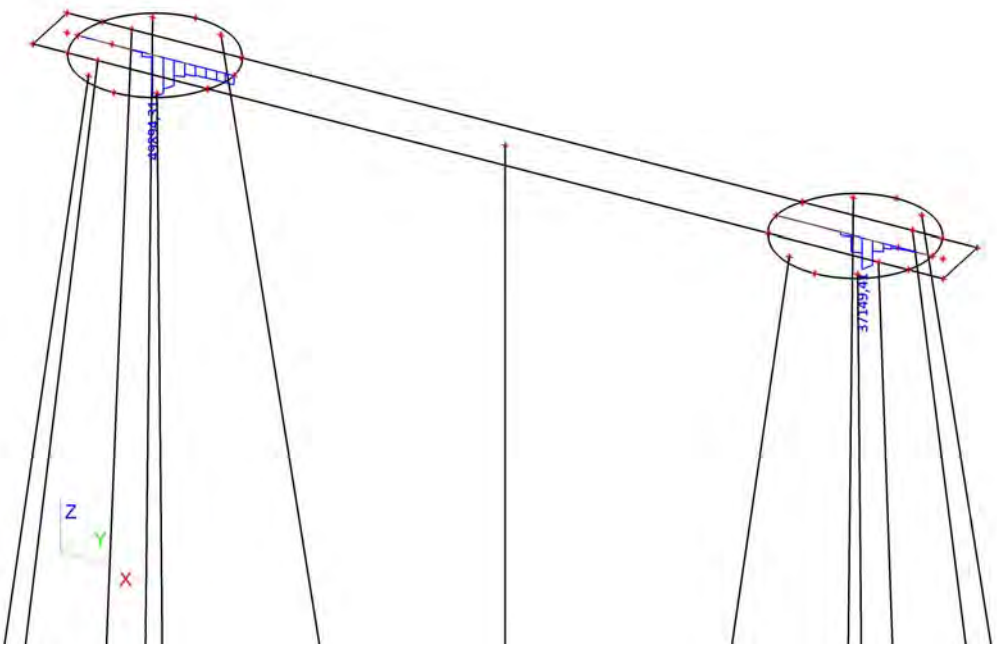

18. 2D element - Interne krachten; myD+

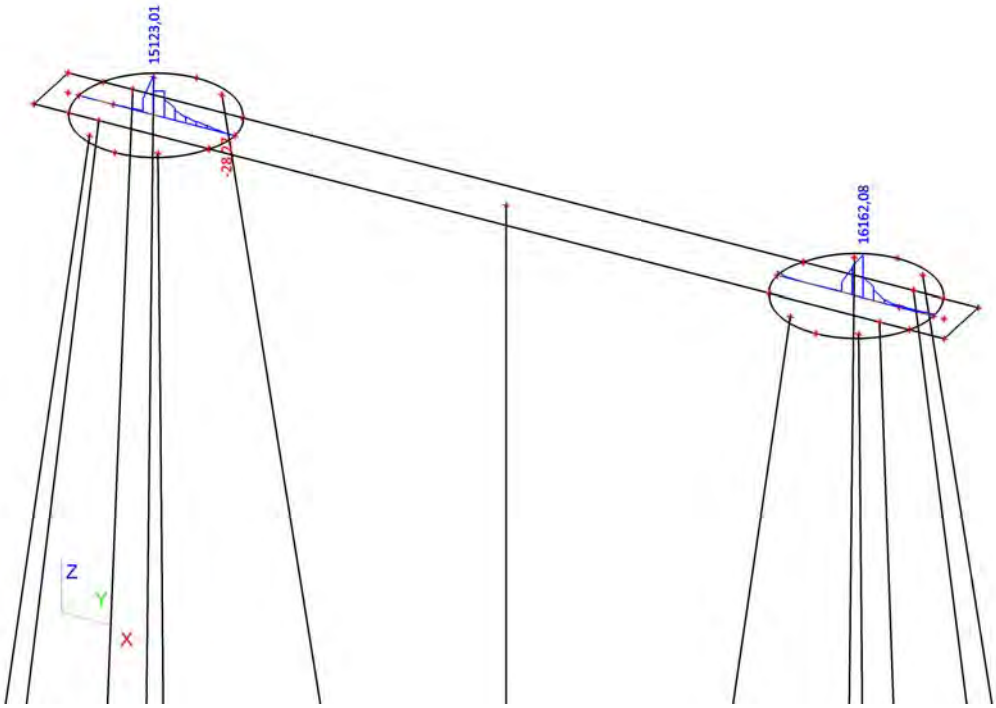

19. 2D element - Interne krachten; myD-

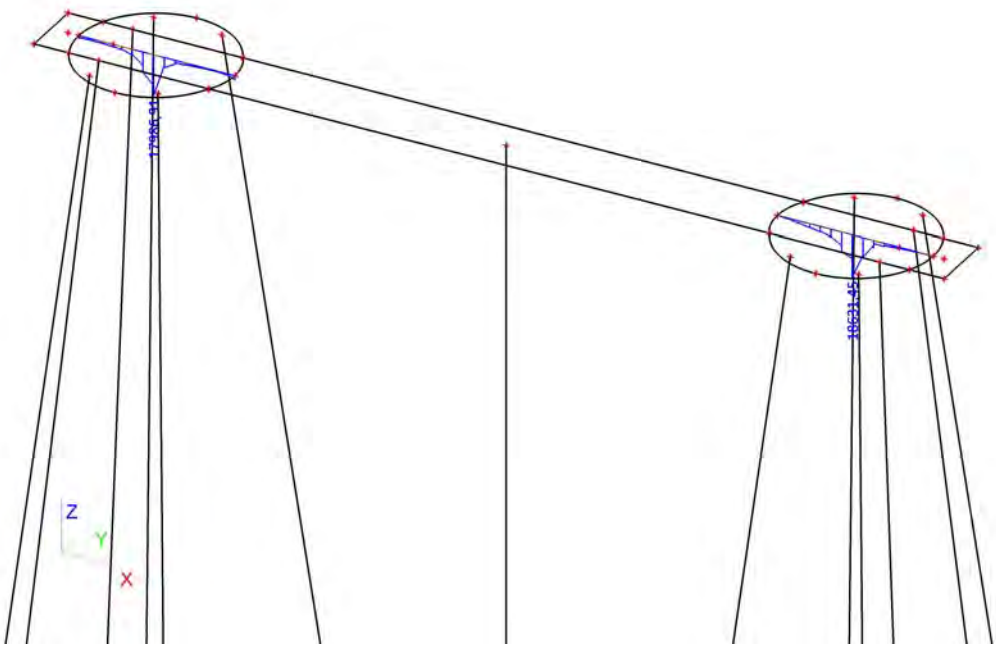

20. 2D element - Interne krachten; vx

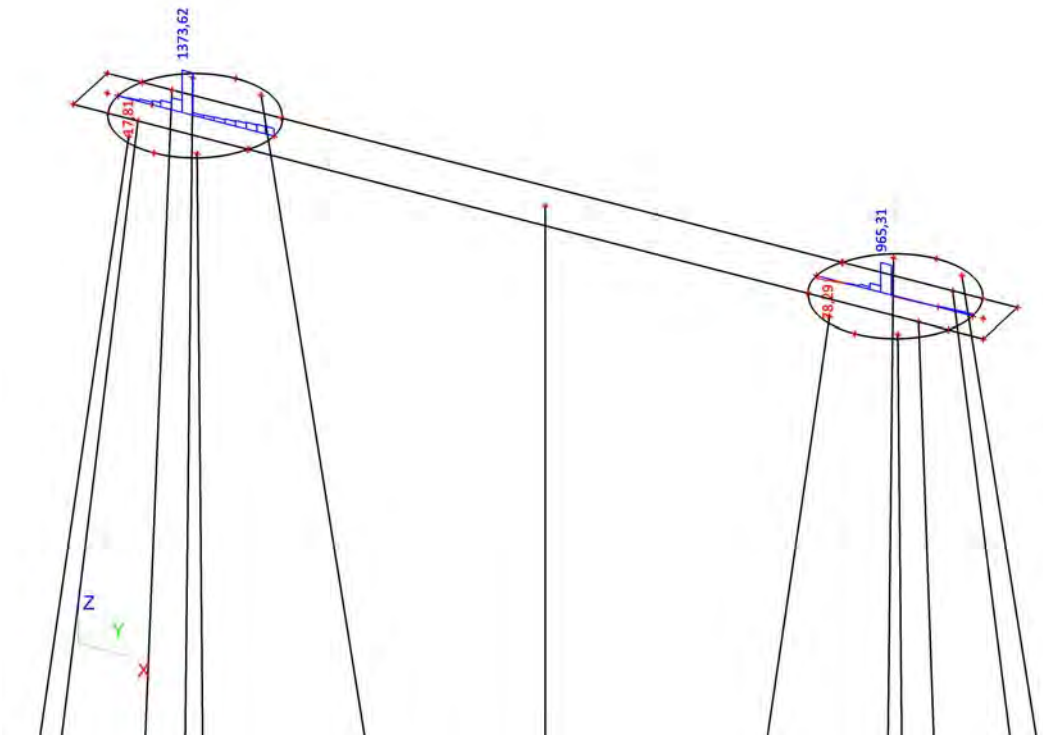

21. 2D element - Interne krachten; vy

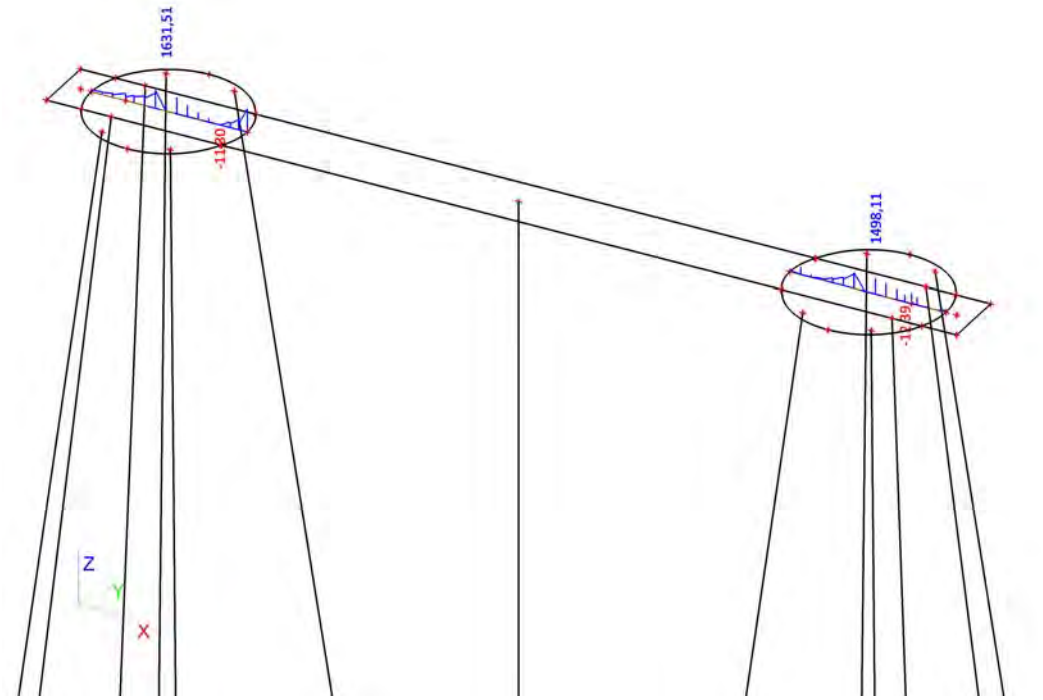

Constructieberekening mastfundatie type C

Project:
Randstad 380 kV Noordring

Opdrachtgever:
TenneT TSO

Revisie	Datum	Wijzigingen ten opzichte van vorige revisie
00	19-07-2013	Eerste uitgave
01	06-08-2013	Tweede uitgave
02	02-10-2013	T.b.v. 3e uitgave

Documentnummer: R3N-OWR-0005

Opsteller	*Controleur*	*Vrijgever*
A.L.A. van Noort Constructeur	P. de Jager Ontwerpmanager	Arjan Hogenboom Project Manager

Distributie

Naam	Bedrijf
Extern	
Guido Volman	TenneT TSO
Intern	
Arjan Hogenboom	BAM
Pieter de Jager	BAM
Eric van Rooijen	BAM
David van Loenen	BAM
Rob Bakker	BAM
Erwin ten Cate	BAM
Michael Desmet	Fabricom
Hein Pijnappel	Mott MacDonald

Beheer

De documentbeheerder van de combinatie verzorgt de distributie. Alleen houders van een geregistreerde kopie ontvangen automatisch aanvullingen en/of wijzigingen. Het is de verantwoordelijkheid van de houders het document up to date te houden. De laatste versie is altijd beschikbaar in ThinkProject!

Indien documenten worden geprint, geldt het volgende: een geregistreerde kopie is geldig vanaf de datum van uitgifte. Bij uitgifte van een document met een hoger revisienummer verliest de voorgaande versie automatisch haar geldigheid. Kopiehouders dienen het voorblad van een ongeldige versie te markeren met een diagonale lijn samen met de tekst 'vervallen'.

Neem bij twijfel over de geldende versie contact op met de documentbeheerder.

Inhoudsopgave

1. Inleiding 4
1.1. Overzicht verschillende typen 4
1.1.1. Fundatietype A 5
1.1.2. Fundatietype B 5
1.1.3. Fundatietype C 6
1.1.4. Fundatietype D 6
1.1.5. Fundatietype F 7
1.2. Mastbeeld bij fundatie type C 8
1.3. Gerelateerde documenten 8
1.4. Openstaande punten 9
1.5. Revisiebeheer 9
2. Uitgangspunten en eisen 11
2.1. Uitgangspunten 11
2.2. Gehanteerde normen 11
2.3. Eisen 11
2.4. Vermoeiing 11
2.5. Materiaalgegevens 11
2.5.1. Betonkwaliteiten 11
2.5.2. Milieuklasse 12
2.5.3. Betondekking 12
2.5.4. Staalkwaliteiten 12
2.6. Veerconstante funderingspalen 12
3. Berekening poer type C 15
3.1. Geometrie 15
3.2. Belastingen en belastingcombinaties 15
3.2.1. Belastingsfactoren 15
3.2.2. Belastingsgevallen 16
3.2.3. Belastingcombinaties 18
3.3. Wisselende belastingen en vermoeiing 20
4. Verbinding mast-fundering 23
4.1. Berekening fundering 23
5. Bijlagen 24
Bijlage 1 Uitvoer SCIA Engineer – lage E-waarde (model 1) 25
Bijlage 2 Uitvoer SCIA Engineer – Matige E-waarde (model 2) 26

1. INLEIDING

De komende jaren werken het ministerie van Economische Zaken en TenneT aan de aanleg van een nieuwe 380 kV hoogspanningsverbinding in de Randstad. De nieuwe verbinding stelt de voorziening van elektriciteit in de Randstad veilig.

Het ontwerptracé van de nieuwe Randstad 380 kV verbinding is sinds eind 2008 bekend. De plannen gaan uit van twee ringen, tussen Wateringen en Zoetermeer (de Zuidring) en tussen Zoetermeer en Beverwijk (de Noordring). Eind 2012 heeft Tennet de aanbesteding opgestart voor het gedeelte van de Noordring tussen station Vijfhuizen en Bleiswijk. Het contract is opgedeeld in twee percelen, waarbij de grens ligt bij Zuidelijke Ringvaart. Dit document heeft betrekking op perceel 2 (het zuidelijke gedeelte).

BAM heeft op 8 juli 2013 het contract ondertekend met TenneT voor het ontwerp en realiseren van perceel 2. Het voorliggende document is onderdeel van het Definitief Ontwerp en behandelt de mastfundaties. Dit betreft ook de masten welke ter plaatse van een OSP zijn gelokaliseerd. De overige onderdelen van de OSP's zijn in een afzonderlijk document berekend evenals de funderingspalen.

Dit rapport betreft poer C. Een overzicht van de verschillende poertypen is gegeven is de ontwerpbasis R3N-OWR-0001.

1.1. OVERZICHT VERSCHILLENDE TYPEN

Binnen het project komen verschillende typen masten voor.
De verschillen komen voort uit:

- aantal systemen dat een mastenpaar draagt, 2 systemen (2x380 kV) of 4 systemen (2x380 kV en 2x150 kV),
- de functie van de mast, Steunmast, Hoekmast of Eindmast,
- maximale veldlengte tussen masten 350 of 400 m,
- aanpassingen aan mast (b.v. +10 m extra hoogte).

Elke mast heeft een eigen belastingpatroon. Na analyse van de verschillende belastingen en geometrische eisen zijn er uiteindelijk 5 mastfundatie typen bepaal. Met deze 5 typen is er voor elke mast een geschikte fundatie beschikbaar.

De fundatietypen zijn hieronder weergegeven.

1.1.1. FUNDATIETYPE A

Toegepast bij masttype:
W2S400 + 5
W2S350 + 5
W2S400A+10

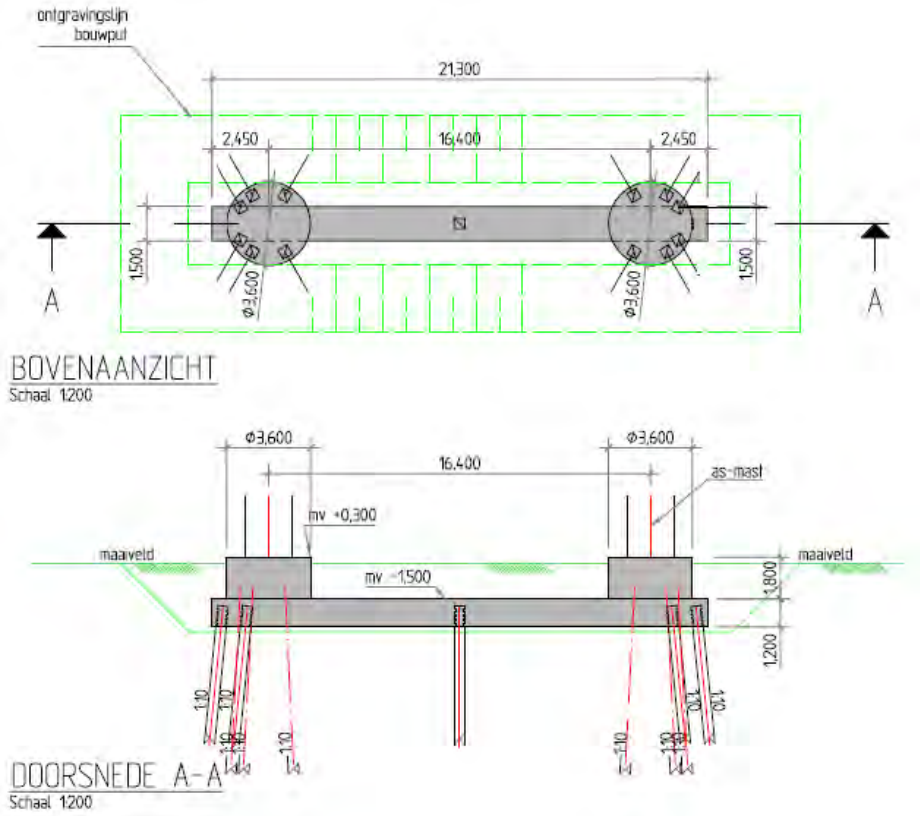

1.1.2. FUNDATIETYPE B

Toegepast bij masttype:
W4S400Z + 5
W2S400 + 24
W2S400 + 24
W4S400Z + 14

Opm: verschil met type A is diameter opstort.

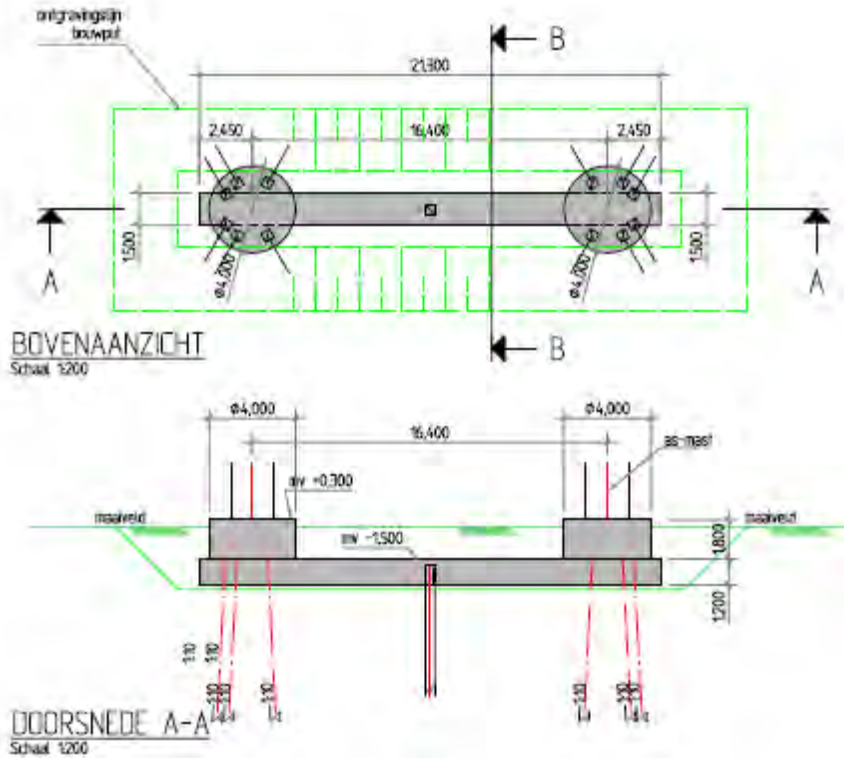

1.1.3. FUNDATIETYPE C

Toegepast bij masttype:
- W2H400 + 5
- W2H400 + 5
- W2H400 + 10
- W2H400 + 10 mast 133
- W2H400 + 15

Opm: mast 133 was in de oude nummering mast 82.

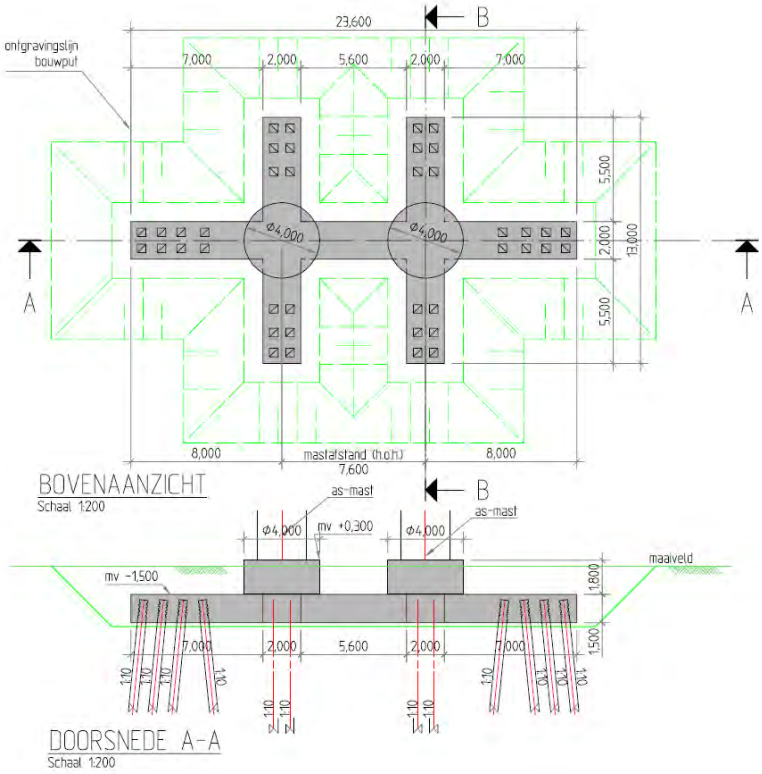

1.1.4. FUNDATIETYPE D

Toegepast bij masttype:
- W4H400Z + 5 (Afstap 150kV)
- W4H400Z +10 (Afstap 150kV)

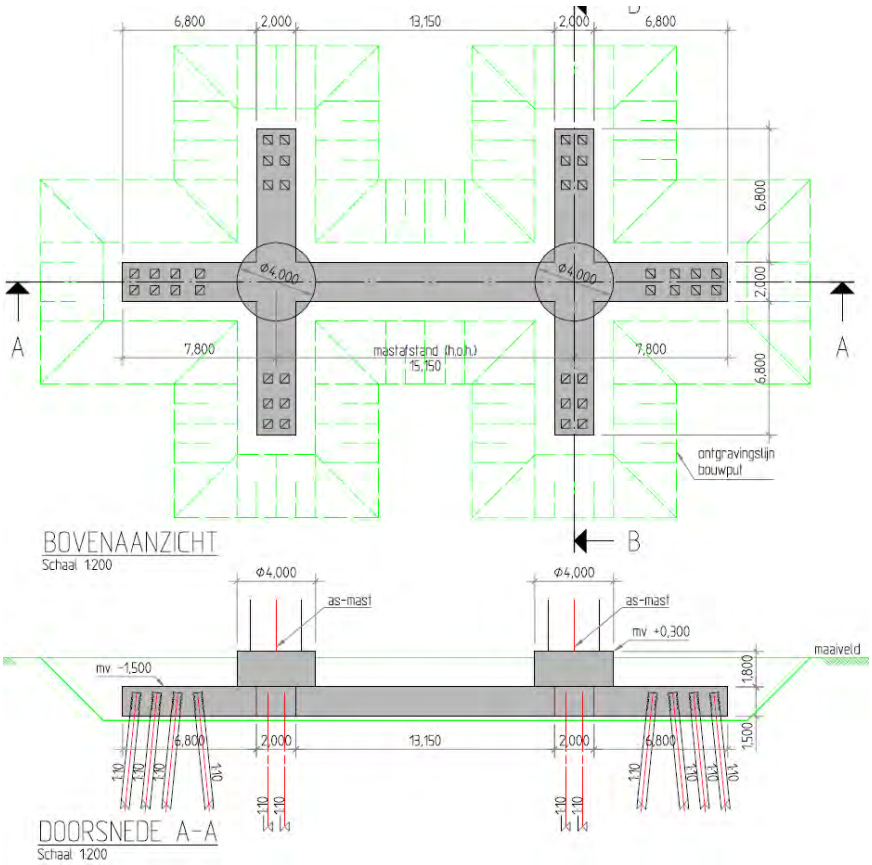

1.1.5. FUNDATIETYPE F

Toegepast bij masttype:
- W2E350 + 5
- W2E400
- W2E350

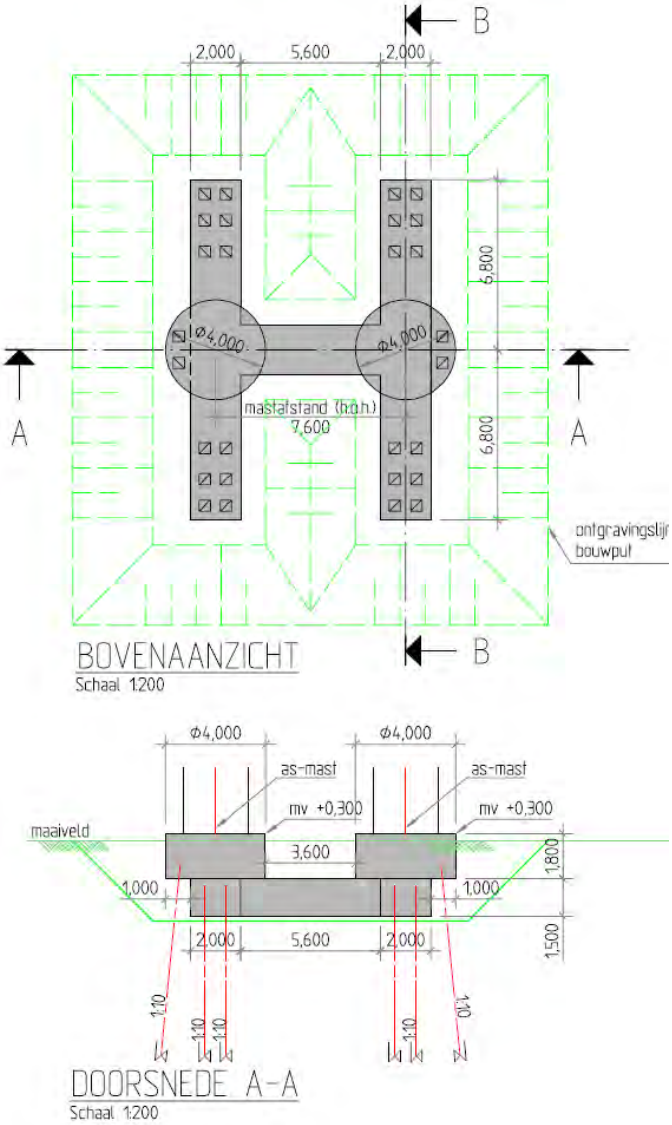

1.2. MASTBEELD BIJ FUNDATIE TYPE C

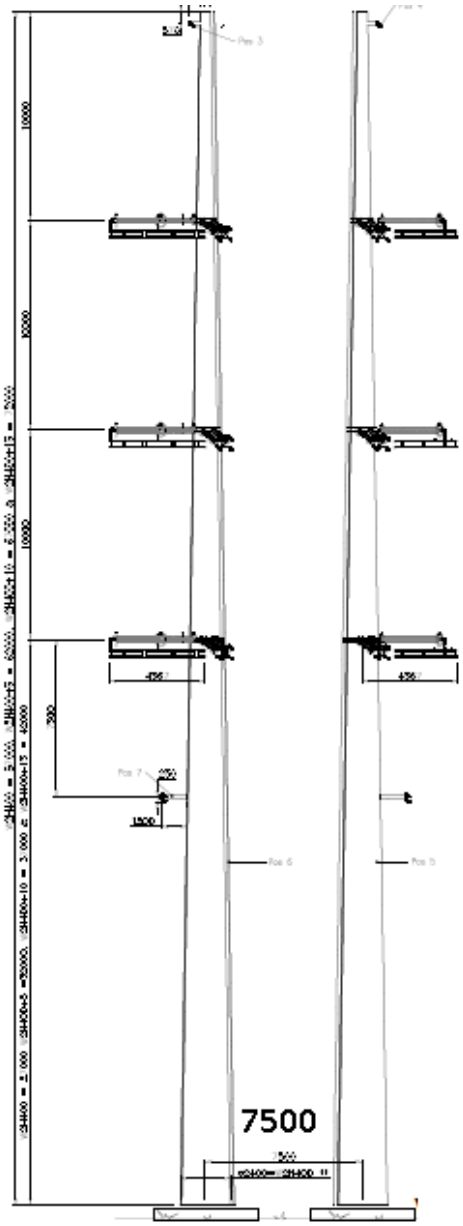

De h.o.h. afstand van de masten bedraagt 7500 mm i.p.v. de in de berekening aangehouden 7600mm. Dit kleine verschil heeft voor de berekening geen invloed

1.3. GERELATEERDE DOCUMENTEN

R3N-OWN-0001 Ontwerpnota Systeem Noordring
R3N-OWR-0003 Constructieberekening mastfundaties type A
R3N-OWR-0004 Constructieberekening mastfundaties type B
R3N-OWR-0005 Constructieberekening mastfundaties type C
R3N-OWR-0006 Constructieberekening mastfundaties type D
R3N-OWR-0007 Constructieberekening mastfundaties type F
R3N-OWR-0008 Ontwerpberekening paalfundering mastfundaties
R3N-OWR-0033 Bepaling belastingen mastfundaties
R3N-OWR-0039 Bemalingsadvies beheersgebied Rijnland
R3N-OWR-0040 Bemalingsadvies beheersgebied Schieland en de Krimpenerwaard

1.4. OPENSTAANDE PUNTEN

De volgende punten dienen in een latere fase nader uitgewerkt te worden:

- Aarding, de wijze van aarden kan invloed hebben op de vermoeiing van het wapeningsstaal.
- Temperatuursinvloeden op fundering
- Model verbeteren d.m.v. dummy elementen aan bovenzijde palen
- Invloed krimp op fundering
- Optimalisatie wapening
- Optimalisatie palen
- Detailontwerp prefab beton\
- H.o.h afstand masten aanpassen van 7600 naar 7500 mm

1.5. REVISIEBEHEER

Aangepast in 2^{e} uitgave
Er zijn nog vrijwel geen grondgegevens beschikbaar. Dit rapport is een principe berekening. Toegevoegd zijn enkele betonberekeningen. Daarnaast zijn er nu 2 modellen van de fundering gedraaid.

Aangepast in 3^{e} uitgave
Dit is de 3^{e} uitgave. In deze revisie is toegevoegd:

- Mastbeeld toegevoegd,
- Nadere uitwerking milieuklasse
- Masttype W2H400 + 15 was in het overzicht zowel bij poer type C als D genoemd. Mast komt op type C.
- Masttype W2S400A+10 ontbrak in het overzicht. Toegevoegd bij poertype A
- Toelichting koppeling mast met fundatie

2. UITGANGSPUNTEN EN EISEN

2.1. UITGANGSPUNTEN

De uitgangspunten vermeldt in de ontwerpnota R3N-OWR-00001 dienen als basis voor het ontwerp van de fundatie van de Wintrackmasten.

Op de funderingen worden de lasten geplaatst zoals afgeleid in document R3N-OWR-0033 'Bepaling belasting mastfundaties'.

2.2. GEHANTEERDE NORMEN

De normen zoals vermeld in ontwerpnota R3N-OWN-0001 §3 zijn gehanteerd bij het ontwerp.

2.3. EISEN

De eisen zoals vermeld in ontwerpnota R3N-OWN-0001 §3 zijn gehanteerd bij het ontwerp.
Voor de masten gelden specifiek onderstaande eisen:

- De fundamenten van de staalconstructies ten behoeve van de masten worden gedimensioneerd op een maximale vervorming van 0.005 RAD onder representatieve waarden van de belastingen;
- Tot 1,5 m diepte mag de straalomtrek van de fundering niet groter zijn dan 1,0 m meer dan de straal van de mast;
- De ZRO-breedte tussen de (schoor)paalpunten en andere ondergrondse constructies van de masten is maximaal 2x 22 m voor de 2x 380kV (solo) verbinding en 2 x 27 m voor de 2 x 150 kV/380 kV (combi) verbinding;
- Tolerantie van mastlocatie naar buiten is 10 cm, tolerantie naar binnen is 0 cm.

2.4. VERMOEIING

De aan te leggen fundamenten worden gedimensioneerd op een vermoeiingsbelasting. De wisseling van belasting komt uit wind. Het aantal en de grote van de wisselingen gedurende 50 jaar is bepaald conform de ROK. De toetsingsprocedure van de constructie conform NEN-EN 1992-1-1:2005.

2.5. MATERIAALGEGEVENS

In onderstaande paragrafen worden de gehanteerde materiaaleigenschappen benoemd.

2.5.1. BETONKWALITEITEN

Voor het constructief beton worden bij de detaillering de volgende sterkteklassen aangehouden. De betonkwaliteit van de ronde opstort (C35/45) is voorgeschreven. Bij gescheurd beton wordt in eerste instantie gerekend met $E_{beton;gescheurd} \approx 1/3\ E_{beton;ongescheurd}$. Tevens is een ca. 2 x zo hoge E-modulus beschouwd.

Onderdeel	Sterkteklasse	Elastisciteitsmodulus [N/mm²]		
		ongescheurd	Gescheurd lage E	Gescheurd matige E
in het werk gestort gewapend beton:	C30/37	31.000	11.000	22.00
in het werk gestort gewapend beton, ronde opstort	C35/45	33.500		
geprefabriceerd beton (U-bakken):	C35/45	33.500		
geprefabriceerd voorgespannen beton (palen):	C45/55	36.000		

Tabel 2.5.1-1 Betonkwaliteiten

2.5.2. MILIEUKLASSE

Voor de betondelen welke meer dan 1,0 m onder maaiveld liggen geldt milieuklasse XC2
Voor de hoger gelegen betondelen is de milieuklasse afhankelijk van de aanwezigheid van openbare wegen. De wegen naar de OSP's zullen niet gestrooid worden en bovendien nauwelijks bereden worden, waardoor het wegspatten van water met dooizouten niet aan de orde is. De afstanden in onderstaande schets geldt voor snelwegen, bij ander wegen zou deze eventueel kleiner kunnen.

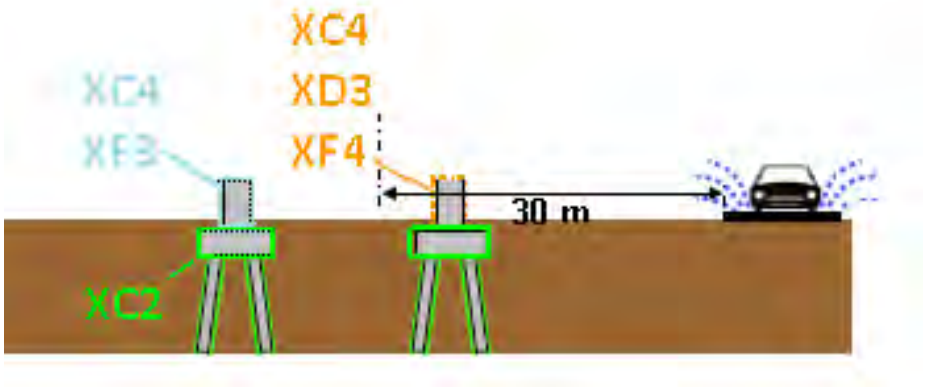

2.5.3. BETONDEKKING

Betondekking conform NEN EN 1992-1-1:2011

$$c_{min} = \max\{c_{min,b};\ c_{min,dur} + \Delta c_{dur,\gamma} - \Delta c_{dur,st} - \Delta c_{dur,add};\ 10\ mm\} \qquad (4.2)$$

waarin:

$c_{min,b}$	is de minimumdekking op basis van de aanhechtingseisen, zie 4.4.1.2 (3);
$c_{min,dur}$	is de minimumdekking op basis van de milieu-omstandigheden, zie 4.4.1.2 (5);
$\Delta c_{dur,\gamma}$	is een aanvullende veiligheidsmarge, zie 4.4.1.2 (6);
$\Delta c_{dur,st}$	is een reductie van de minimumdekking bij gebruik van roestvast staal, zie 4.4.1.2 (7);
$\Delta c_{dur,add}$	is een reductie van de minimumdekking bij gebruik van aanvullende bescherming, zie 4.4.1.2 (8).

De verwachting is dat $c_{min;b}$ maatgevend wordt. Deze warade is afhankelijk van de staafdiameter, welk enog niet bekend is. Betondekking wordt in UO bepaald.

2.5.4. STAALKWALITEITEN

Voor het wapeningsstaal worden de volgende staalkwaliteiten aangehouden:

Omschrijving	Kwaliteit
betonstaal (staven)	B500 B
betonstaal (gepuntlaste wapeningsnetten):	B500 B

Tabel 2.5.2 Staalkwaliteiten

2.6. VEERCONSTANTE FUNDERINGSPALEN

De constructie wordt gefundeerd op prefab betonpalen. De palen worden horizontaal gesteund door de grond wat resulteert in een horizontale beddingconstante op de funderingspaal. Verticaal wordt de funderingspaal gesteund door een verticale puntveer. Beide veerconstanten zijn bepaald door de geotechnische adviseur in rapport R3N-OWR-0008.

In het model wordt gerekend met een verticale veerstijfheid van 90.000 kN/m.
Voor de horizontale bedding worden onderstaande waarden aangehouden.

In de volgende tabellen worden deze gereduceerde beddingsconstanten gepresenteerd.

X-richting		Voor ESA berekeningen			
soort	b.k. laag	per m^2 paal		per m'paal	
	[m+ NAP]	$k_{h,rep,laag}$ [kN/m^3]	$k_{h,rep,hoog}$ [kN/m^3]	$k_{h,rep,laag}$ [kN/m/m]	$k_{h,rep,hoog}$ [kN/m/m]
Veen	-1.6	1,400	3,200	700	1,600
Klei	-2.7	500	1,200	300	600
Veen	-5.1	1,400	3,200	700	1,600
Klei	-6.0	800	1,800	400	900
Veen	-11.2	1,400	3,200	700	1,600
Zand	-12.1	13,600	30,600	6,900	15,600
Zand	-22.0	16,300	36,700	8,300	18,700

Tabel 6 - Horizontale beddingsconstanten voor belasting uit de X-richting

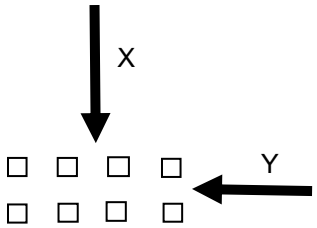

Y-richting		Voor ESA berekeningen			
soort	b.k. laag	per m^2 paal		per m'paal	
	[m+ NAP]	$k_{h,rep,laag}$ [kN/m^3]	$k_{h,rep,hoog}$ [kN/m^3]	$k_{h,rep,laag}$ [kN/m/m]	$k_{h,rep,hoog}$ [kN/m/m]
Veen	-1.6	1,000	2,300	500	1,200
Klei	-2.7	400	900	200	400
Veen	-5.1	1,000	2,300	500	1,200
Klei	-6.0	600	1,300	300	700
Veen	-11.2	1,000	2,300	500	1,200
Zand	-12.1	9,800	22,100	5,000	11,300
Zand	-22.0	11,800	26,500	6,000	13,500

Tabel 7 - Horizontale beddingsconstanten voor belasting uit de Y-richting

Figuur 3 Horizontale beddingsconstanten per belastingsrichting

Voor alle richtingen is steeds de lage waarde van de beddingsconstante, richting Y aangehouden.

3. BEREKENING POER TYPE C

3.1. GEOMETRIE

De geometrie van de type C poeren is als volgt:

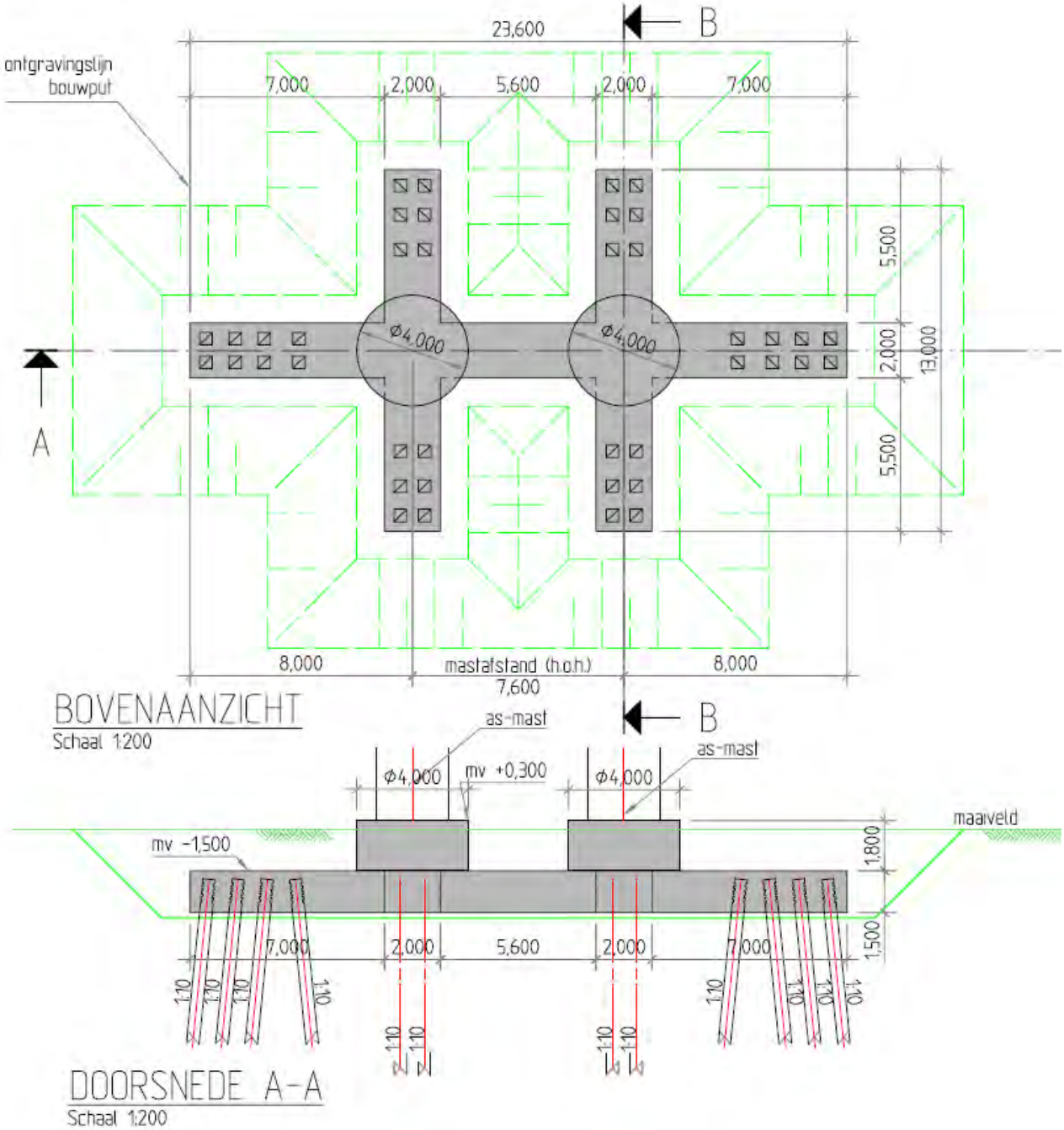

3.2. BELASTINGEN EN BELASTINGCOMBINATIES

3.2.1. BELASTINGSFACTOREN

De belasting uit de poeren bestaat vooral uit lasten uit de mast cq lijnen. Deze lasten zijn, incl. partiële factoren gegeven door de opdrachtgever op basis van een rapport van KEMA.

Daarnaast zijn er lasten op de poeren zelf. Hiervoor geldt dat vergelijking 6.10 b van de EN 1990 maatgevend is. Gecombineerd met CC3 gelden de volgende partiële factoren:

γ_G (ongunstig)	=	1,3	
γ_G (gunstig)	=	0,9	(zie §3.2.2, op eigen gewicht fundering wordt factor 0,54 toegepast)
γ_Q	=	1,65	

Opm: De meeste lasten zijn door de klant incl de factoren gegeven. Bovenstaande factoren hebben dus alleen invloed op het eigen gewicht , grond en belastingen op maaiveld.

3.2.2. BELASTINGSGEVALLEN

Eigen gewichtpoer
Eigen gewicht van de b etonconstructie wordt gegenereerd in het model. Er wordt gerekend met een eigengewicht voor beton van 2500 kg/m$^{3.}$

Omdat er ook trek op de palen komt, is eigen gewicht al snel een gunstige belasting (druk eenvoudiger op te nemen dan trek).Indien de poer zich onderwater bevindt zal er een opwaartse kracht gelijk aan het gewicht van het verplaatste water op de poer aanwezig zijn. Het effectieve gewicht van de poer reduceert hierdoor tot 1500 kg/m^3. Inclusief partiële factor van 0,9 volgt 1350 kg/m^3. In totaal bedraagt de factor dan dus 1350/2500 = 0,54.

Eigen gewicht grond op poer
Op de poer ligt 1,5 m grond. Indien het grondwater lager ligt, is de last:

1,5 * 17 = 25,5 kN/m^2

Bij waterstand gelijk aan 0,5m onder maaiveld niveau is de last:

0,5 * 17 + 1,0 * (17-10) = 15,5 kN/m^2

Inclusief partiële factor van 0,9 volgt 13,95 kN/m^2. In totaal bedraagt de factor dan dus 13,95/25,5 = 0,54.

Reken met droge grond en pas een partiële factor van 0,54 op eigen gewicht poer en grond toe in het geval deze gunstig werken.

Belastingen uit de mast
Zie rapport 'Afleiding belasting uit masten'.

Er wordt gerekend met de volgende, donker aangegeven ULS en SLS lasten uit het rapport. De overige lasten zijn met deze gevallen afgedekt.

Voor het variabele deel dat zijn oorsprong vindt in wind, wordt gerekend met:

ψ_0	ψ_1	ψ_2
0,6	0,2	0

ULS

Mast	Wind	Loadcase	M_{langs}	M_{dwars}	N	V_{langs}	V_{dwars}
W2H400+5	90 deg	3	0	37867	1025	0	943
W2H400+5	0 deg	1b	665	16478	682	23	401
W2H400+5	45 deg	1a	14930	27013	682	382	678
W2H400+5	90 deg	1a	21715	14294	385	527	379
W2H400+5	-45 deg	3	26019	14403	398	644	358
W2H400A+5 (mast 74)	0 deg	3	1034	31674	1024	36	784
W2H400A+5 (mast 74)	90 deg	1a	1308	36670	903	53	910
W2H400A+5 (mast 74)	-45 deg	1a	15738	26743	678	415	667
W2H400A+5 (mast 74)	90 deg	1a	21715	14294	385	527	379
W2H400A+5 (mast 74)	-45 deg	3	26019	14403	398	644	358
W2H400+10	0 deg	3	1300	38231	1280	42	829
W2H400+10	90 deg	3	0	45178	1276	0	990
W2H400+10	45 deg	1a	17515	32392	853	404	726
W2H400+10	0 deg	3	1300	26959	1176	42	582
W2H400+10	90 deg	1a	0	33107	1139	0	757
W2H400+10	90 deg	3	0	33678	1172	0	738
W2H400+10	45 deg	1a	8721	25248	855	218	575
W2H400+10 (mast 82)	0 deg	3	4565	34528	1258	152	731
W2H400+10 (mast 82)	90 deg	1a	1574	41927	1127	53	931
W2H400+10 (mast 82)	-45 deg	1a	18211	30577	848	430	682
W2H400+10 (mast 82)	0 deg	3	3002	24614	1167	99	522
W2H400+10 (mast 82)	90 deg	1a	1233	31402	1133	42	712
W2H400+10 (mast 82)	0 deg	1b	21118	11542	847	471	245
W2H400+15	0 deg	3	1560	40126	1413	47	785
W2H400+15	90 deg	1a	0	49086	1264	0	1006
W2H400+15	45 deg	1a	20418	35375	952	433	725
W2H400+15	0 deg	1a	5546	1538	1284	167	18
W2H400+15	0 deg	3	1560	2784	1425	47	31
W2H400+15	90 deg	1a	0	21043	1265	0	422
W2H400+15	0 deg	1a	5546	1201	964	167	14

SLS

Type	Wind	Loadcase	M_{langs}	M_{dwars}	N	V_{langs}	V_{dwars}
W2H400+5	0 deg	1b	2363	20045	757	81	512
W2H400+5	45 deg	1a	8801	23569	757	234	595
W2H400+5	90 deg	3	2363	31280	835	81	794
W2H400+5	-45 deg	1a	8108	23569	757	234	595
W2H400A+5 (mast 74)	0 deg	1b	3321	19716	753	120	499
W2H400A+5 (mast 74)	90 deg	3	4602	30221	821	172	751
W2H400A+5 (mast 74)	-45 deg	1a	8941	23276	753	269	583
W2H400+10	0 deg	3	3081	33806	1046	99	765
W2H400+10	45 deg	1a	10468	28323	949	253	639
W2H400+10	90 deg	1a	3081	32890	946	99	734
W2H400+10	90 deg	3	3081	37539	1043	99	843
W2H400+10 (mast 82)	0 deg	1a	4010	21112	949	130	481
W2H400+10 (mast 82)	45 deg	3	4263	32798	1029	158	726
W2H400+10 (mast 82)	90 deg	1a	4307	31284	941	140	691
W2H400+10 (mast 82)	90 deg	3	5665	34675	1028	186	765
W2H400+10 (mast 82)	-45 deg	1a	10407	26626	945	283	597
W2H400+15	0 deg	3	3697	35947	1157	111	742
W2H400+15	45 deg	1a	12353	30742	1060	276	634
W2H400+15	90 deg	1a	3697	36518	1056	111	745
W2H400+15	90 deg	3	3697	40557	1154	111	830
W2H400+15	-45 deg	1a	11270	30742	1060	276	634

Belastingen op maaiveld
Op het maaiveld wordt gerekend met een verdeelde last van 10 kN/m^2 . Er is geen stempellast op de fundering voorzien. Echter, door spreiding van een puntlast over een diepte van 1,5 m, zal een lastvlak van 2 (breedte balk) x 3 (2*1,5) = 6 m^2 ontstaan, waardoor bij 10 kN/m^2 dus ook een puntlast van 60 kN toelaatbaar is.

Voor deze belastingen wordt in de combinatie gerekend met:

ψ_0	ψ_1	ψ_2
0,7	0,5	0,3

3.2.3. BELASTINGCOMBINATIES

Belastingcombinaties in ULS conform vergelijking 6.10b van NEN EN 1990, waarbij:
0,7 * 1,65 = 1,16

En de belastingsfactoren voor de last uit de masten reeds in de ingevoerde belasting is meegenomen (factor 1,0 toegepast).

ULS

Belastinggeval	Omschrijving	Combi 1	Combi 2	Combi 3	Combi 4	Combi 5	Combi 6
1	Eigen gewicht	1,3	1,3	1,3	1,3	0,54	0,54
2	Grond	1,3	1,3	1,3	1,3	0,54	0,54
3	Belasting mast ULS 1	1,0		0,6		1,0	
4	Belasting mast ULS 2		1,0		0,6		1,0
7	Belasting op maaiveld	1,16	1,16	1,65	1,65		

SLS

Belastinggeval	Omschrijving	Combi 7	Combi 8	Combi 9	Comb i 10	Combi 11	Combi 12
5	Eigen gewicht	1,0	1,0	1,0	1,0	0,6	0,6
6	Grond	1,0	1,0	1,0	1,0	0,6	0,6
5	Belasting mast SLS 1	1,0		0,6		1,0	
6	Belasting mast SLS 2		1,0		0,6		1,0
7	Belasting op maaiveld	0,7	0,7	1,0	1,0		

3.3. WISSELENDE BELASTINGEN EN VERMOEIING

Door de wisselende belastingen van wind dient belasting door vermoeiing te worden meegenomen. Bij vermoeiing is het aantal wisselingen en de grootte van de wisseling van belang. In de NEN-EN 1991-1-4:2005 is in bijlage B.3 een figuur opgenomen waarin de verhouding tussen de grootte van de windlast en het aantal keren dat deze optreedt weergegeven.

B.3 Aantal belastingen voor dynamische respons

(1) Figuur B.3 geeft het aantal keren N_g dat de waarden ΔS van een windeffect worden bereikt of overschreden gedurende een periode van 50 jaar. ΔS wordt uitgedrukt in percentage van de waarde S_k, waar S_k het effect is van een windbelasting met een herhalingstijd van 50 jaar.

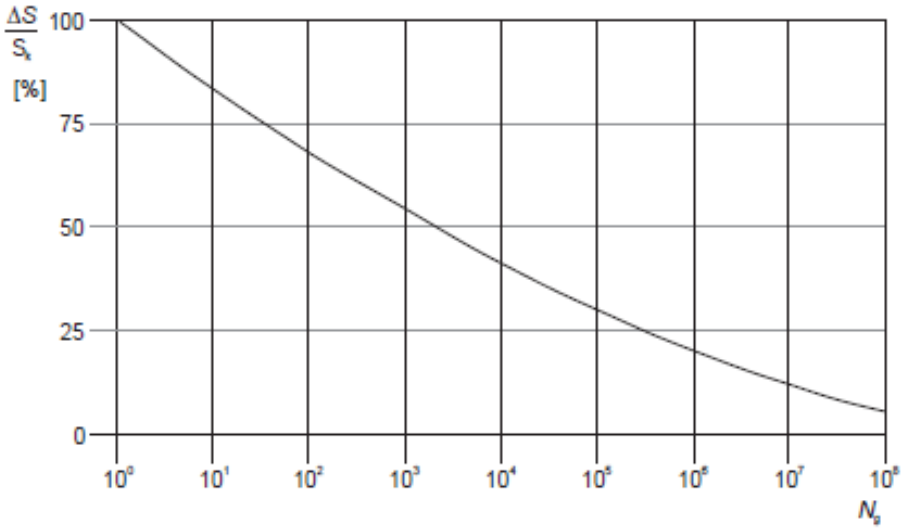

Figuur B.3 — Aantal windvlaagbelastingen N_g voor een effect $\Delta S/S_k$ gedurende een herhalingstijd van 50 jaar

De relatie wordt omschreven met de volgende uitdrukking

$$\frac{\Delta S}{S_k} = 0{,}7 \cdot (\log(N_g))^2 - 17{,}4 \cdot \log(N_g) + 100 \qquad \text{(B.9)}$$

Bij vermoeiing wordt bij een bepaald spanningsniveau het aantal wisselingen op dit spanningsniveau bepaald en vervolgens wordt dit vergeleken met het aantal toelaatbare wisselingen op dat spanningsniveau. Door dit voor de voorkomende spanningsniveaus te doen is de weerstand tegen vermoeiing te controleren.

In de ROK van RWS is bovenstaande verdeling gediscretiseerd tot onderstaande tabel:

Tabel 5-1: Aantal wisselingen per windbelasting (referentieperiode 50 jaar)

ΔS / Sk (%)	n
100	1
98	1
90	8
75	90
61	900
48	9000
36	90000
25	900000
16	9000000
9	90000000

Van beton en wapeningsstaal is bekend hoeveel wisselingen bij een bepaald spanningsniveau toelaatbaar zijn. S_K is de spanning met een herhalingstijd van 50 jaar (de spanning waarop de constructie ontworpen is).

Met bovenstaande gegevens is te bepalen welke maximale spanning t.g.v. wind eens in de 50 jaar toelaatbaar is opdat de constructie ook voldoende weerstand tegen vermoeiing heeft.

Wapening
De totale schade van de belastingen dient volgens de beschadigingsregel van Miner kleiner dan 1 te zijn.
De toetsingsprocedure per wisseling conform NEN-EN 1992-1-1:2005, §6.8.4:
Voor de wapening is gekeken naar de toelaatbare spanning voor:

- Rechte staven
- Staven gebogen met een doordiameter 2,5*D
- Gelaste staven

Er volgt (zie berekening hieronder) dat voor gewone rechte staven er geen beperking is, echter gebogen of gelaste staven hebben de volgende spanningsbeperking:

Buigdoorn 2,5ø → 244 N/mm^2
Buigdoorn 5ø → 283 N/mm^2
Gelaste staven → 317 N/mm^2

Omdat bij de toetsing van vermoeiing een ULS toestand met veiligheid 1,0 wordt getoetst, is de spanning altijd minimaal een factor van ca. 1,3 lager dan de normale ULS toestanden.

Bij een toelaatbare spanning van 435 N/mm^2 in ULS volgt bij toetsing op vermoeiing een spanning van maximaal 335 N/mm^2. De toelaatbare spanningen bij vermoeiing zijn nog iets lager. Hier dient in de detaillering rekening mee gehouden te worden. Een toetsing achteraf zal volstaan.

Rechte staven

maximale gebruiksspanning			435	
Toelaatbare spanningswisseling bij N* wisselingen			162,5	
		k1	5	
		k2	9	
		N*	1,00E+06	
	ROK	Wisseling spanning	Toelaatbaar aantal	
aantal wisselingen	dS/S	wapening	wisselingen	Schade
[-]	[-]	[N/mm2]	[-]	[-]
1	100	435	7275	0,000137
1	98	426	8048	0,000124
8	90	392	12320	0,000649
90	75	326	30656	0,002936
900	61	265	86133	0,010449
9000	48	209	285505	0,031523
90000	36	157	1394937	0,064519
900000	25	109	37137862	0,024234
9000000	16	70	2061565470	0,004366
90000000	9	39	365674259232	0,000246
			Totale schade	**0,139183665**

Staven gebogen met doorndiameter 2,5*D

maximale gebruiksspanning			244	
Toelaatbare spanningswisseling bij N* wisselingen			67,4	
		k1	5	
		k2	9	
		N*	1,00E+06	

aantal wisselingen [-]	ROK dS/S [-]	Wisseling spanning wapening [N/mm2]	Toelaatbaar aantal wisselingen [-]	Schade [-]
1	100	244	1613	0,000620
1	98	239	1784	0,000560
8	90	220	2731	0,002929
90	75	183	6796	0,013243
900	61	149	19095	0,047134
9000	48	117	63292	0,142197
90000	36	88	266714	0,337440
900000	25	61	2466861	0,364836
9000000	16	39	136938283	0,065723
90000000	9	22	24289699180	0,003705
			Totale schade	**0,978388484**

Staven gebogen met doorndiameter 5*D

maximale gebruiksspanning			283	
Toelaatbare spanningswisseling bij N* wisselingen			78,0	
		k1	5	
		k2	9	
		N*	1,00E+06	

aantal wisselingen [-]	ROK dS/S [-]	Wisseling spanning wapening [N/mm2]	Toelaatbaar aantal wisselingen [-]	Schade [-]
1	100	283	1591	0,000629
1	98	277	1760	0,000568
8	90	255	2694	0,002970
90	75	212	6702	0,013428
900	61	173	18832	0,047792
9000	48	136	62422	0,144181
90000	36	102	263044	0,342148
900000	25	71	2406099	0,374050
9000000	16	45	133565305	0,067383
90000000	9	25	23691410595	0,003799
			Totale schade	**0,996946687**

Gelaste staven

maximale gebruiksspanning			317	
Toelaatbare spanningswisseling bij N* wisselingen			58,5	
		k1	3	
		k2	5	
		N*	1,00E+07	

aantal wisselingen [-]	ROK dS/S [-]	Wisseling spanning wapening [N/mm2]	Toelaatbaar aantal wisselingen [-]	Schade [-]
1	100	317	62848	0,000016
1	98	311	66775	0,000015
8	90	285	86211	0,000093
90	75	238	148972	0,000604
900	61	193	276886	0,003250
9000	48	152	568285	0,015837
90000	36	114	1347046	0,066813
900000	25	79	4022257	0,223755
9000000	16	51	20411885	0,440920
90000000	9	29	362468668	0,248297
			Totale schade	**0,999600179**

4. VERBINDING MAST-FUNDERING

De masten worden verbonden met de fundering d.m.v. een ingestorte ankerkooi. Een ankerkooi is hieronder weergegeven

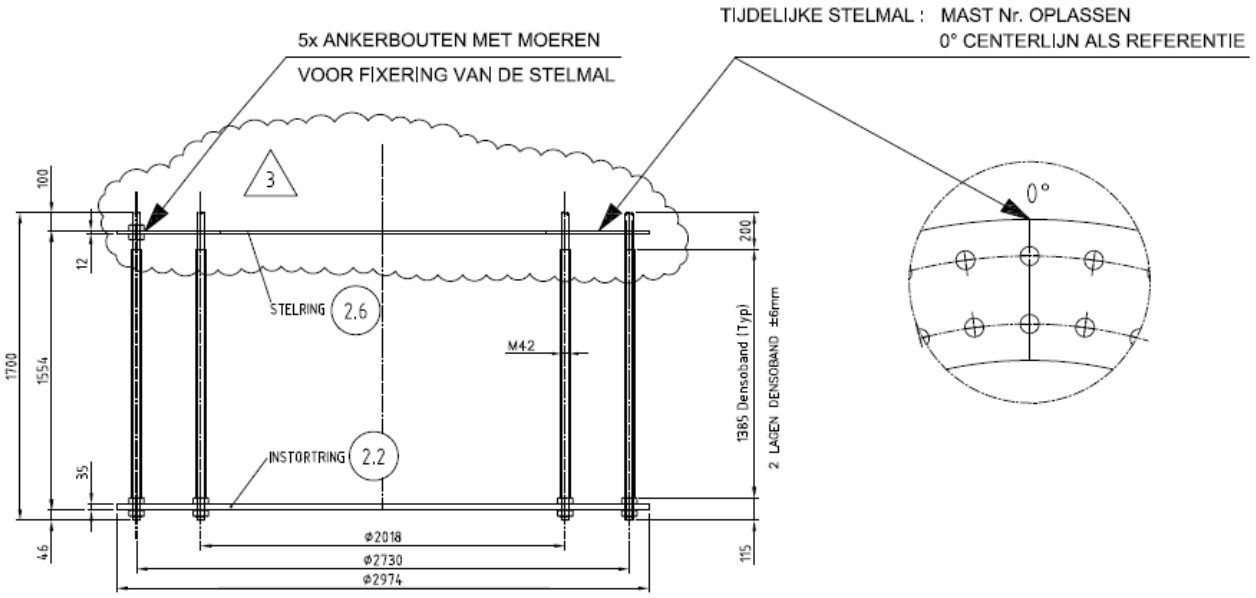

DETAIL VERANKERING

NOTA : ALLE RESTERENDE MOEREN EN ONDERLEGRINGEN WORDEN LOS MEEGELEVERD

Prepared by: LV Revision: 3 Date: 5-7-2011	Material: – Quantity: 2 Equipm. no.: W4E350	**VDL KTI**	Project No.: 36002 Workprep. No.: Pos. No.: ANKERKOOI

De ankers en platen zijn berekend door Volker Infra Design bij het ontwerp van de masten. De ankerkooi bevindt zich in de ronde opstort. De ronde opstort is d.m.v. stekken verbonden met de kruisvormige balken. De stekken worden in de UO fase berekend.

4.1. BEREKENING FUNDERING

De poer is ingevoerd in een SCIA engineer model.

Er zijn 2 modellen gedraaid:

Model 1: Lage gescheurde E modulus
Model 2: Matige gescheurde E modulus

5. BIJLAGEN

Bijlage 1 Uitvoer SCIA Engineer – lage E-waarde (model 1)

Bijlage 2 Uitvoer SCIA Engineer – matige E-waarde (model 2)

BIJLAGE 1 UITVOER SCIA ENGINEER – LAGE E-WAARDE (MODEL 1)

BIJLAGE 2 UITVOER SCIA ENGINEER – MATIGE E-WAARDE (MODEL 2)

Constructieberekening mastfundaties type D

Project:
Randstad 380kV Noordring

Opdrachtgever:
TenneT TSO

Revisie	Datum	Wijzigingen ten opzichte van vorige revisie
00	10-07-2013	Eerste uitgave
01	19-07-2013	Opmerkingen review verwerkt
02	06-08-2013	Definitief. Tweede uitgave
03	02-10-2013	T.b.v. 3e uitgave

Documentnummer: R3N-OWR-0006

Opsteller	*Controleur*	*Vrijgever*
A.L.A. van Noort Constructeur	P. de Jager Ontwerpmanager	Arjan Hogenboom Project Manager

Distributie

Naam	Bedrijf
Extern	
Guido Volman	TenneT TSO
Intern	
Arjan Hogenboom	BAM
Pieter de Jager	BAM
Eric van Rooijen	BAM
David van Loenen	BAM
Rob Bakker	BAM
Erwin ten Cate	BAM
Michael Desmet	Fabricom
Hein Pijnappel	Mott MacDonald

Beheer

De documentbeheerder van de combinatie verzorgt de distributie. Alleen houders van een geregistreerde kopie ontvangen automatisch aanvullingen en/of wijzigingen. Het is de verantwoordelijkheid van de houders het document up to date te houden. De laatste versie is altijd beschikbaar in ThinkProject!

Indien documenten worden geprint, geldt het volgende: een geregistreerde kopie is geldig vanaf de datum van uitgifte. Bij uitgifte van een document met een hoger revisienummer verliest de voorgaande versie automatisch haar geldigheid. Kopiehouders dienen het voorblad van een ongeldige versie te markeren met een diagonale lijn samen met de tekst 'vervallen'.

Neem bij twijfel over de geldende versie contact op met de documentbeheerder.

Inhoudsopgave

1. Inleiding 4
1.1. Overzicht verschillende typen 4
1.1.1. Fundatietype A 5
1.1.2. Fundatietype B 5
1.1.3. Fundatietype C 6
1.1.4. Fundatietype D 6
1.1.5. Fundatietype F 7
1.2. Mastbeeld bij fundatie type D 8
1.3. Gerelateerde documenten 8
1.4. Openstaande punten 9
1.5. Revisiebeheer 9
2. Uitgangspunten en eisen 10
2.1. Uitgangspunten 10
2.2. Gehanteerde normen 10
2.3. Eisen 10
2.4. Vermoeiing 10
2.5. Materiaalgegevens 10
2.5.1. Betonkwaliteiten 10
2.5.2. Milieuklasse 11
2.5.3. Betondekking 11
2.6. Staalkwaliteiten 11
2.7. Veerconstante funderingspalen 11
3. Berekening poer type D 13
3.1. Geometrie 13
3.2. Belastingen en belastingcombinaties 13
3.2.1. Belastingsfactoren 13
3.2.2. Belastingsgevallen 14
3.2.3. Belastingcombinaties 16
3.3. Wisselende belastingen en vermoeiing 17
4. Verbinding mast-fundering 20
4.1. Controle ronde opstort 20
4.2. Berekening fundering 22
5. Bijlagen 23
Bijlage 1 Uitvoer SCIA Engineer – lage E-waarde 24
Bijlage 2 Uitvoer SCIA Engineer – matige E-waarde 25

1. INLEIDING

De komende jaren werken het ministerie van Economische Zaken en TenneT aan de aanleg van een nieuwe 380 kV hoogspanningsverbinding in de Randstad. De nieuwe verbinding stelt de voorziening van elektriciteit in de Randstad veilig.

Het ontwerptracé van de nieuwe Randstad 380 kV verbinding is sinds eind 2008 bekend. De plannen gaan uit van twee ringen, tussen Wateringen en Zoetermeer (de Zuidring) en tussen Zoetermeer en Beverwijk (de Noordring). Eind 2012 heeft Tennet de aanbesteding opgestart voor het gedeelte van de Noordring tussen station Vijfhuizen en Bleiswijk. Het contract is opgedeeld in twee percelen, waarbij de grens ligt bij Zuidelijke Ringvaart. Dit document heeft betrekking op perceel 2 (het zuidelijke gedeelte).

BAM heeft op 8 juli 2013 het contract ondertekend met TenneT voor het ontwerp en realiseren van perceel 2. Het voorliggende document is onderdeel van het Definitief Ontwerp en behandelt de mastfundaties. Dit betreft ook de masten welke ter plaatse van een OSP zijn gelokaliseerd. De overige onderdelen van de OSP's zijn in een afzonderlijk document berekend evenals de funderingspalen.

Dit rapport betreft een poer D. Op poer D worden de volgende masttypen geplaatst: W2H400 + 15, W4H400Z + 5 (Afstap 150kV), W4H400Z +10 (Afstap 150kV)

De wapening wordt in het UO ontwerp uitgewerkt.

1.1. OVERZICHT VERSCHILLENDE TYPEN

Binnen het project komen verschillende typen masten voor.

De verschillen komen voort uit:
- aantal systemen dat een mastenpaar draagt, 2 systemen (2x380 kV) of 4 systemen (2x380 kV en 2x150 kV);
- de functie van de mast, Steunmast, Hoekmast of Eindmast;
- maximale veldlengte tussen masten 350 of 400 m;
- aanpassingen aan mast (b.v. +10 m extra hoogte).

Elke mast heeft een eigen belastingpatroon. Na analyse van de verschillende belastingen en geometrische eisen zijn er uiteindelijk 5 mastfundatie typen bepaal. Met deze 5 typen is er voor elke mast een geschikte fundatie beschikbaar.

De fundatietypen zijn hieronder weergegeven

1.1.1. FUNDATIETYPE A

Toegepast bij masttype:
- W2S400 + 5
- W2S350 + 5
- W2S400A+10

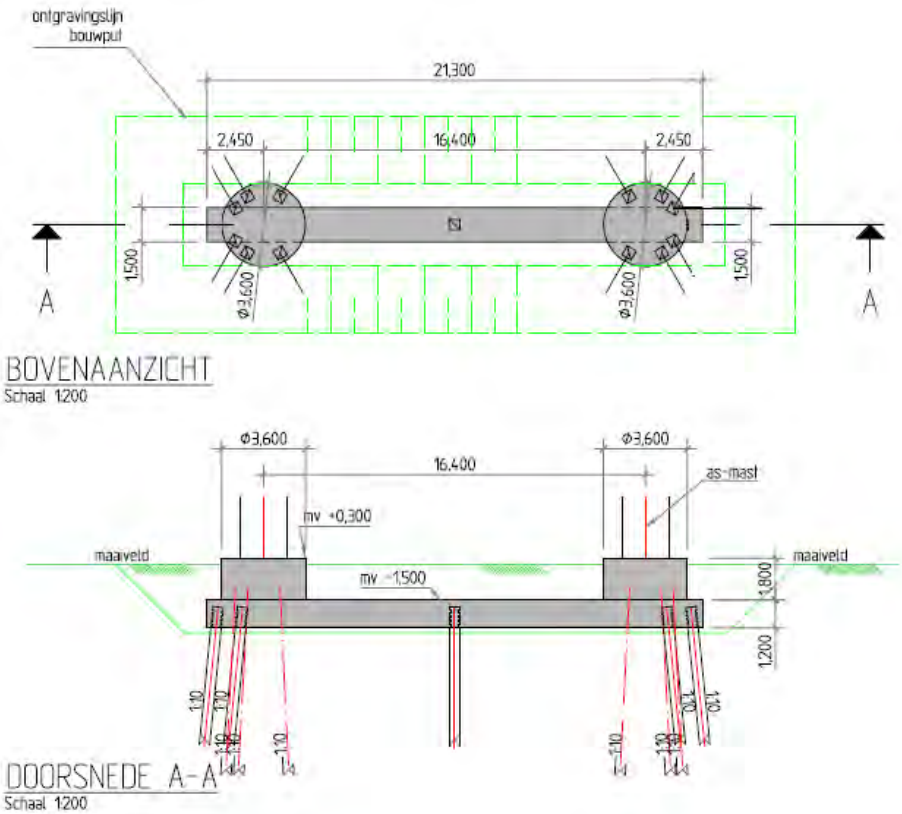

1.1.2. FUNDATIETYPE B

Toegepast bij masttype:
- W4S400Z + 5
- W2S400 + 24
- W2S400 + 24
- W4S400Z + 14

Opm: verschil met type A is diameter opstort.

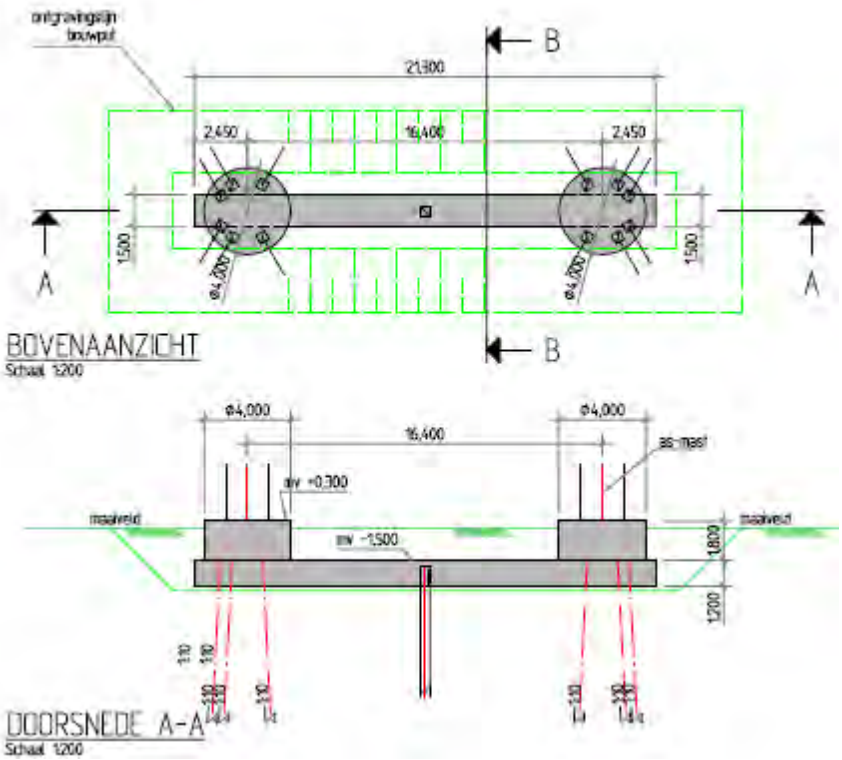

1.1.3. FUNDATIETYPE C

Toegepast bij masttype:
- W2H400 + 5
- W2H400 + 5
- W2H400 + 10
- W2H400 + 10 mast 133
- W2H400 + 15

Opm: mast 133 was in de oude nummering mast 82.

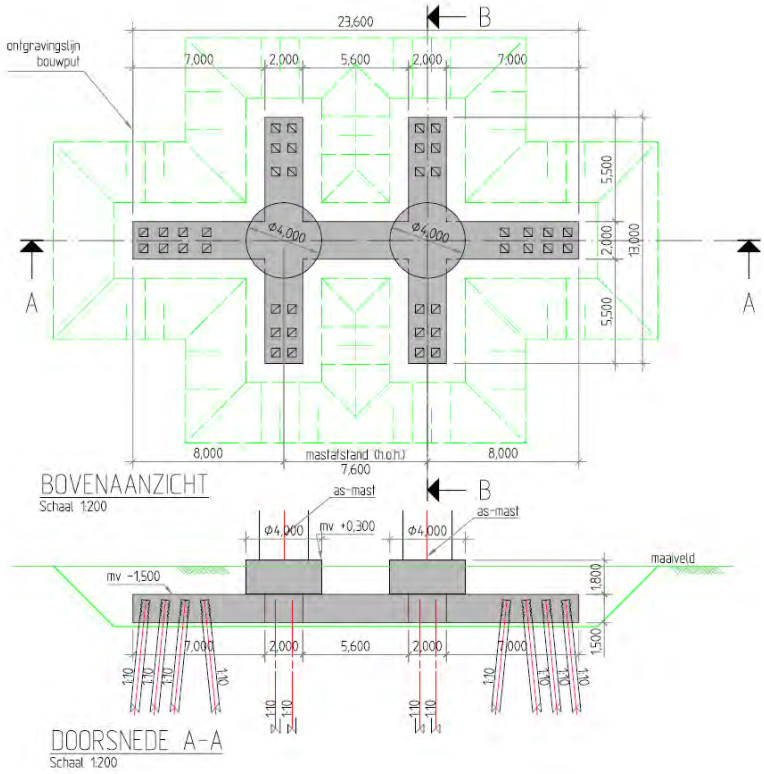

1.1.4. FUNDATIETYPE D

Toegepast bij masttype:
- W4H400Z + 5 (Afstap 150kV)
- W4H400Z +10 (Afstap 150kV)

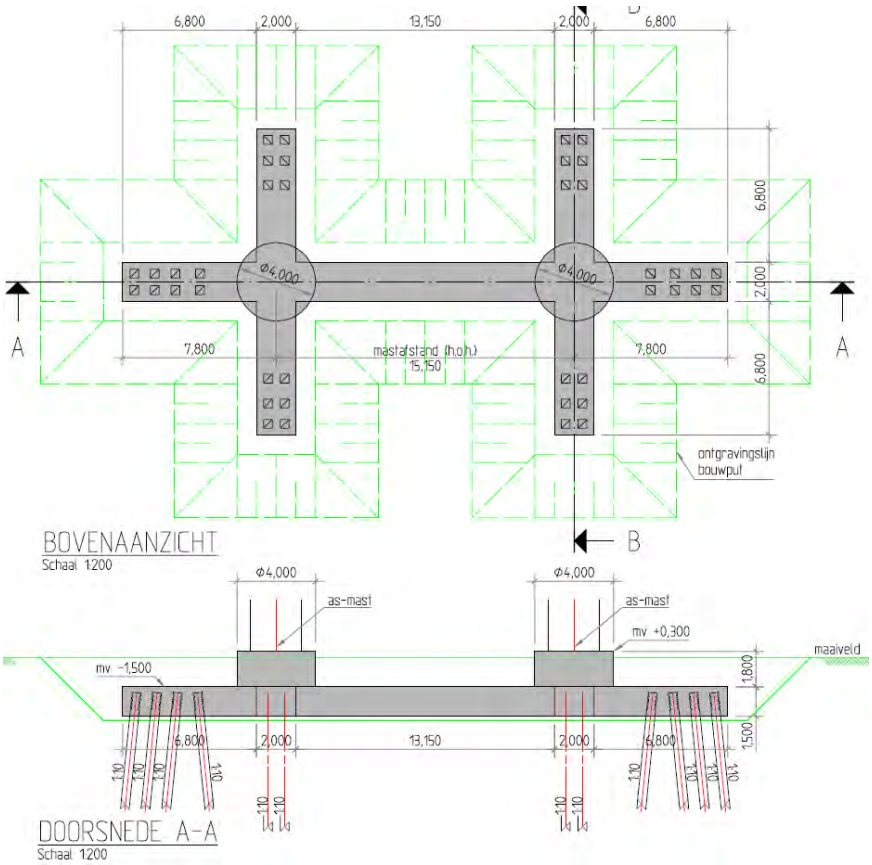

1.1.5. FUNDATIETYPE F

Toegepast bij masttype:
- W2E350 + 5
- W2E400
- W2E350

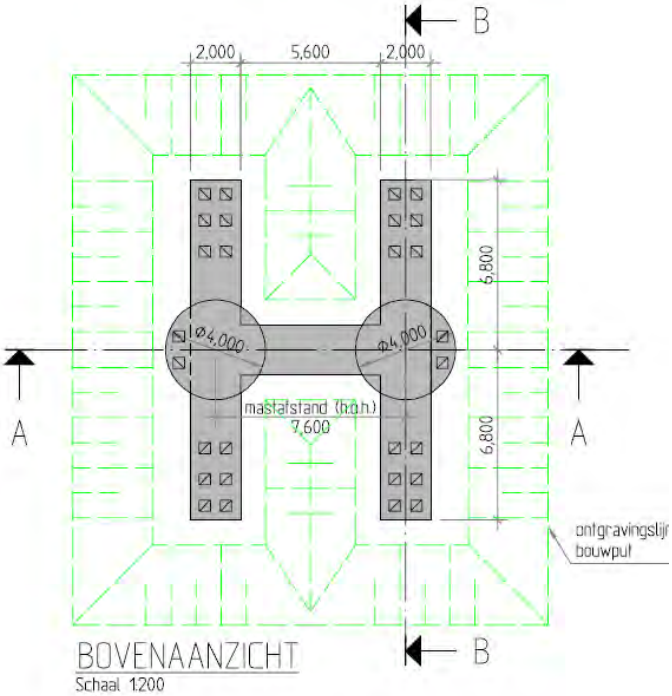

BOVENAANZICHT
Schaal 1:200

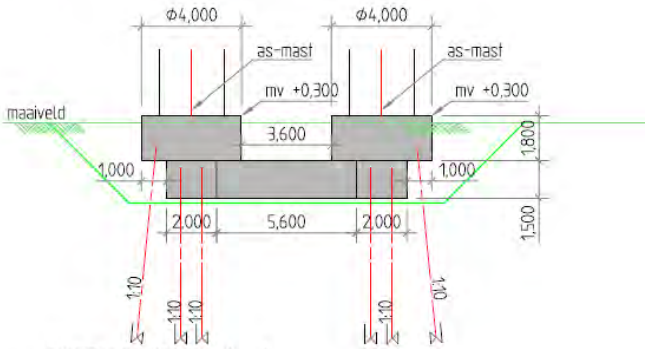

DOORSNEDE A-A
Schaal 1:200

1.2. MASTBEELD BIJ FUNDATIE TYPE D

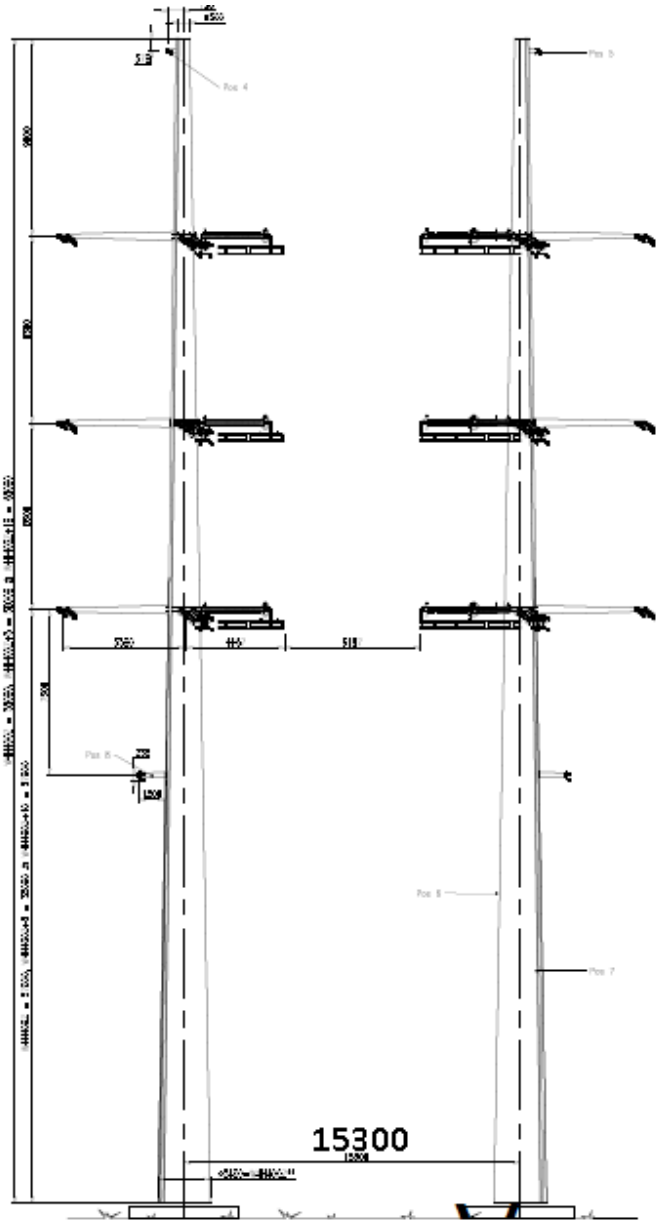

De h.o.h. afstand van de masten bedraagt 15300 mm i.p.v. de in de berekening aangehouden 15150mm. Dit kleine verschil heeft voor de berekening geen invloed

1.3. GERELATEERDE DOCUMENTEN

R3N-OWN-0001 Ontwerpnota Systeem Noordring
R3N-OWR-0003 Constructieberekening mastfundaties type A
R3N-OWR-0004 Constructieberekening mastfundaties type B
R3N-OWR-0005 Constructieberekening mastfundaties type C
R3N-OWR-0006 Constructieberekening mastfundaties type D
R3N-OWR-0007 Constructieberekening mastfundaties type F
R3N-OWR-0008 Ontwerpberekening paalfundering mastfundaties
R3N-OWR-0033 Bepaling belastingen mastfundaties
R3N-OWR-0039 Bemalingsadvies beheersgebied Rijnland
R3N-OWR-0040 Bemalingsadvies beheersgebied Schieland en de Krimpenerwaard

1.4. OPENSTAANDE PUNTEN

De volgende punten dienen in een latere fase nader uitgewerkt te worden:

- Aarding, de wijze van aarden kan invloed hebben op de vermoeiing van het wapeningsstaal.
- Temperatuursinvloeden op fundering
- Model verbetyeren d.m.v. dummy elementen aan bovenzijde palen
- Invloed krimp op fundering
- Optimalisatie wapening
- Optimalisatie palen
- Detailontwerp prefab beton
- H.o.h. afstand masten aanpassen van 15150 naar 15300

1.5. REVISIEBEHEER

Dit is de 2^{e} uitgave. Er zijn nog vrijwel geen grondgegevens beschikbaar. Dit rapport is een principe berekening. Toegevoegd zijn enkele betonberekeningen.

Aangepast in 3^{e} uitgave
Dit is de 3^{e} uitgave. In deze revisie is toegevoegd:

- Mastbeeld toegevoegd,
- Nadere uitwerking milieuklasse
- Masttype W2H400 + 15 was in het overzicht zowel bij poer type C als D genoemd. Mast komt op type C.
- Masttype W2S400A+10 ontbrak in het overzicht. Toegevoegd bij poertype A
- Toelichting koppeling mast met fundatie

2. UITGANGSPUNTEN EN EISEN

2.1. UITGANGSPUNTEN

Op de funderingen worden de lasten geplaatst zoals afgeleid in document R3N-OWR-0033 'Bepaling belasting mastfundaties'. Deze zijn afgeleid van de mastberekeningen zoals door TenneT beschikbaar gesteld.

2.2. GEHANTEERDE NORMEN

De eurocode serie NEN-EN-1990tm1997 wordt gehanteerd

NEN-EN50341

2.3. EISEN

Voor de masten gelden specifiek onderstaande eisen:

- De fundamenten van de staalconstructies ten behoeve van de masten worden gedimensioneerd op een maximale vervorming van 0.005 RAD onder representatieve waarden van de belastingen.
- Tot 1,5 m diepte mag de straalomtrek van de fundering niet groter zijn dan 1,0 m meer dan de straal van de mast.
- De ZRO-breedte tussen de (schoor)paalpunten en andere ondergrondse constructies van de masten is maximaal 2x 22 m voor de 2x 380kV (solo) verbinding en 2 x 27 m voor de 2 x 150 kV/380 kV (combi) verbinding.
- Tolerantie van mastlocatie naar buiten is 10 cm, tolerantie naar binnen is 0 cm.

2.4. VERMOEIING

De aan te leggen fundamenten worden gedimensioneerd op een vermoeiingsbelasting. De wisseling van belasting komt uit wind. Het aantal en de grote van de wisselingen gedurende 50 jaar is bepaald conform de ROK. De toetsingsprocedure van de constructie conform NEN-EN 1992-1-1:2005

2.5. MATERIAALGEGEVENS

In onderstaande paragrafen worden de gehanteerde materiaaleigenschappen benoemd.

2.5.1. BETONKWALITEITEN

Voor het constructief beton worden bij de detaillering de volgende sterkteklassen aangehouden. De betonkwaliteit van de ronde opstort (C35/45) is voorgeschreven. Bij gescheurd beton wordt in eerste instantie gerekend met $E_{beton;gescheurd} = 1/3\ E_{beton;ongescheurd}$. Tevens is een 2 x zo hoge E-modulus beschouwd.

Onderdeel	Sterkteklasse	Elastisciteitsmodulus [N/mm²]		
		ongescheurd	Gescheurd lage E	Gescheurd matige E
in het werk gestort gewapend beton:	C30/37	31.000	11.000	22.000
in het werk gestort gewapend beton, ronde opstort	C35/45	33.500		
geprefabriceerd beton (U-bakken):	C35/45	33.500		
geprefabriceerd voorgespannen beton (palen):	C45/55	36.000		

Tabel 2.5.1-1 Betonkwaliteiten

2.5.2. MILIEUKLASSE

Voor de betondelen welke meer dan 1,0 m onder maaiveld liggen geldt milieuklasse XC2
Voor de hoger gelegen betondelen is de milieuklasse afhankelijk van de aanwezigheid van openbare wegen. De wegen naar de OSP's zullen niet gestrooid worden en bovendien nauwelijks bereden worden, waardoor het wegspatten van water met dooizouten niet aan de orde is. De afstanden in onderstaande schets geldt voor snelwegen, bij ander wegen zou deze eventueel kleiner kunnen.

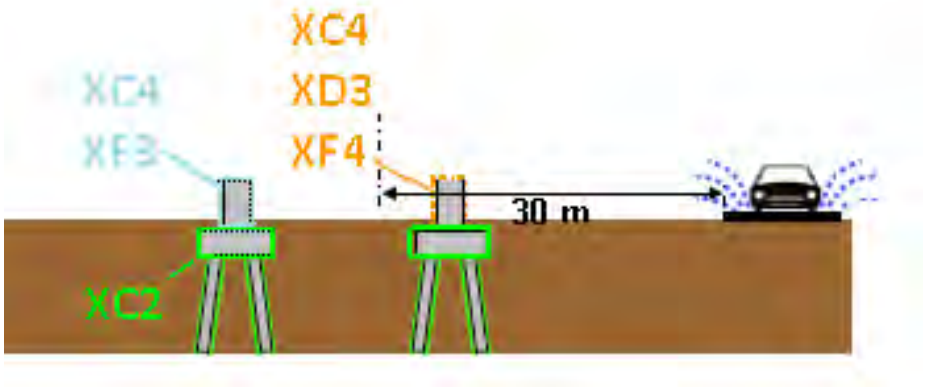

2.5.3. BETONDEKKING

Betondekking conform NEN EN 1992-1-1:2011

$$c_{min} = \max\{c_{min,b};\ c_{min,dur} + \Delta c_{dur,\gamma} - \Delta c_{dur,st} - \Delta c_{dur,add};\ 10\ mm\} \qquad (4.2)$$

waarin:

$c_{min,b}$	is de minimumdekking op basis van de aanhechtingseisen, zie 4.4.1.2 (3);
$c_{min,dur}$	is de minimumdekking op basis van de milieu-omstandigheden, zie 4.4.1.2 (5);
$\Delta c_{dur,\gamma}$	is een aanvullende veiligheidsmarge, zie 4.4.1.2 (6);
$\Delta c_{dur,st}$	is een reductie van de minimumdekking bij gebruik van roestvast staal, zie 4.4.1.2 (7);
$\Delta c_{dur,add}$	is een reductie van de minimumdekking bij gebruik van aanvullende bescherming, zie 4.4.1.2 (8).

De verwachting is dat $c_{min;b}$ maatgevend wordt. Deze warade is afhankelijk van de staafdiameter, welk enog niet bekend is. Betondekking wordt in UO bepaald.

2.6. STAALKWALITEITEN

Voor het wapeningsstaal worden de volgende staalkwaliteiten aangehouden:

Omschrijving	Kwaliteit
betonstaal (staven)	B500 B

Tabel 2.5.2 Staalkwaliteiten

2.7. VEERCONSTANTE FUNDERINGSPALEN

De constructie wordt gefundeerd op prefab betonpalen. De palen worden horizontaal gesteund door de grond wat resulteert in een horizontale beddingconstante op de funderingspaal. Verticaal wordt de funderingspaal gesteund door een verticale puntveer. Beide veerconstanten zijn bepaald door de geotechnische adviseur in rapport R3N-OWR-0008.

In het model wordt gerekend met een vertivcale veerstijfheid van laag 60.000 kN/m en hoog 120.000 kN/m.

Voor de horizontale bedding worden onderstaande waarden aangehouden.

In de volgende tabellen worden deze gereduceerde beddingsconstanten gepresenteerd.

X-richting		Voor ESA berekeningen			
soort	b.k. laag	per m^2 paal		per m'paal	
	[m+ NAP]	$k_{h,rep,laag}$ [kN/m^3]	$k_{h,rep,hoog}$ [kN/m^3]	$k_{h,rep,laag}$ [kN/m/m]	$k_{h,rep,hoog}$ [kN/m/m]
Veen	-1.6	1,400	3,200	700	1,600
Klei	-2.7	500	1,200	300	600
Veen	-5.1	1,400	3,200	700	1,600
Klei	-6.0	800	1,800	400	900
Veen	-11.2	1,400	3,200	700	1,600
Zand	-12.1	13,600	30,600	6,900	15,600
Zand	-22.0	16,300	36,700	8,300	18,700

Tabel 6 Horizontale beddingsconstanten voor belasting uit de X-richting

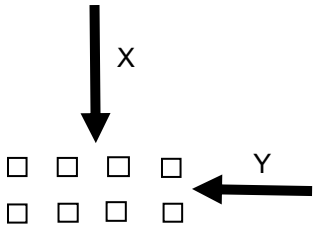

Y-richting		Voor ESA berekeningen			
soort	b.k. laag	per m^2 paal		per m'paal	
	[m+ NAP]	$k_{h,rep,laag}$ [kN/m^3]	$k_{h,rep,hoog}$ [kN/m^3]	$k_{h,rep,laag}$ [kN/m/m]	$k_{h,rep,hoog}$ [kN/m/m]
Veen	-1.6	1,000	2,300	500	1,200
Klei	-2.7	400	900	200	400
Veen	-5.1	1,000	2,300	500	1,200
Klei	-6.0	600	1,300	300	700
Veen	-11.2	1,000	2,300	500	1,200
Zand	-12.1	9,800	22,100	5,000	11,300
Zand	-22.0	11,800	26,500	6,000	13,500

Tabel 7 Horizontale beddingsconstanten voor belasting uit de Y-richting

Figuur 3 - Horizontale beddingsconstanten per belastingsrichting

Voor alle richtingen is steeds de lage waarde van de beddingsconstante in Y-richting aangehouden.

3. BEREKENING POER TYPE D

3.1. GEOMETRIE

De geometrie van de type D poeren is als volgt:

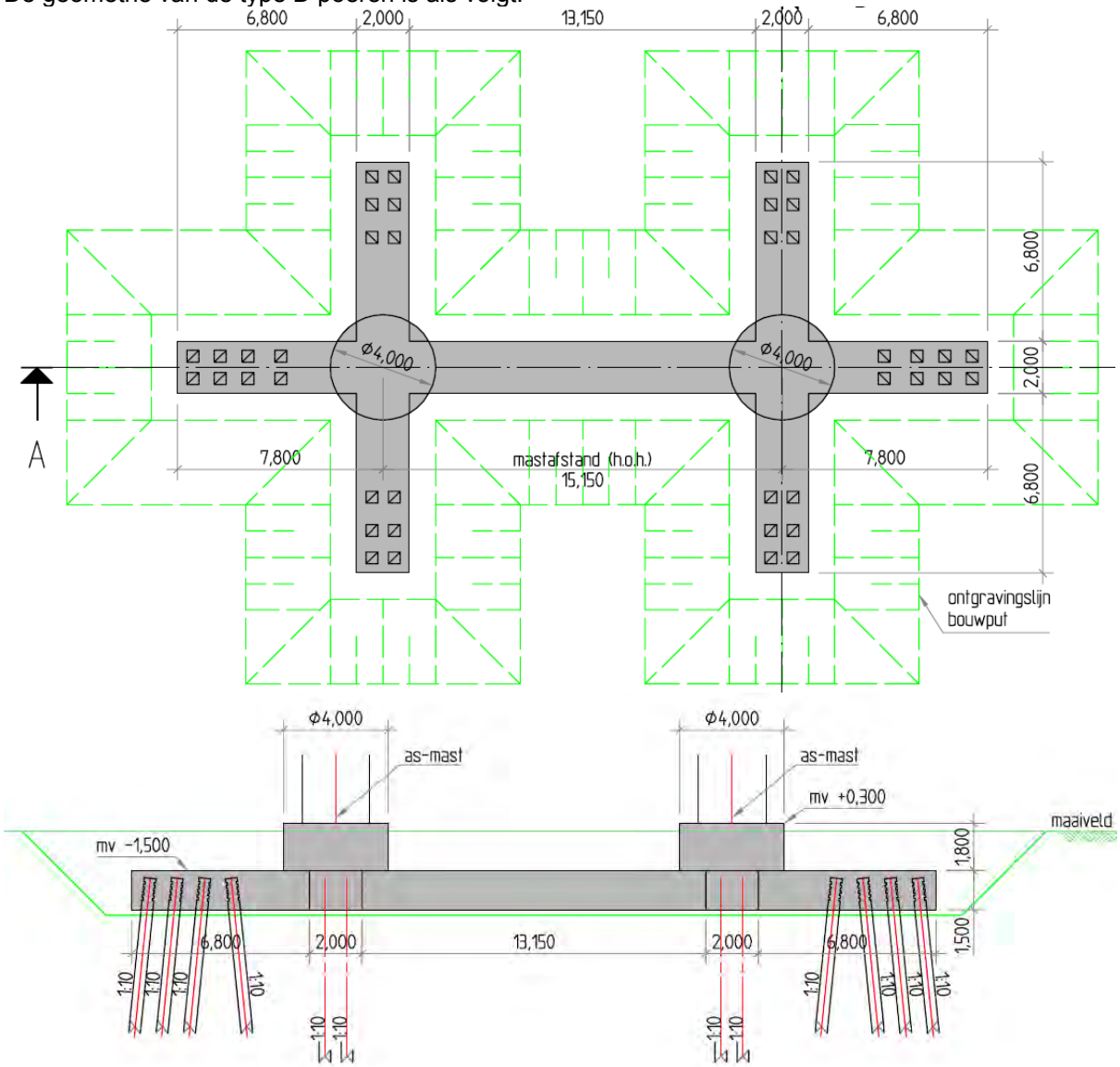

3.2. BELASTINGEN EN BELASTINGCOMBINATIES

3.2.1. BELASTINGSFACTOREN

De belasting uit de poeren bestaat vooral uit lasten uit de mast cq lijnen. Deze lasten zijn, incl. partiële factoren gegeven door de opdrachtgever op basis van een rapport van KEMA (zie ons rapport R3N-OWR-0033).

Daarnaast zijn er lasten op de poeren zelf. Hiervoor geldt dat vergelijking 6.10 b van de EN 1990 maatgevend is. Gecombineerd met CC3 gelden de volgende partiële factoren:

γ_G (ongunstig)	=	1,3	
γ_G (gunstig)	=	0,9	(zie §3.2.2, op eigen gewicht fundering wordt factor 0,54 toegepast)
γ_Q	=	1,65	

Opm: De meeste lasten zijn door de klant incl de factoren gegeven. Bovenstaande factoren hebben dus alleen invloed op het eigen gewicht , grond en belastingen op maaiveld.

3.2.2. BELASTINGSGEVALLEN

Eigengewicht poer
Eigen gewicht van de betonconstructie wordt gegenereerd in het model. Er wordt gerekend met een eigengewicht voor beton van 2500 kg/m^3.

Omdat er ook trek op de palen komt, is eigen gewicht al snel een gunstige belasting (druk eenvoudiger op te nemen dan trek). Indien de poer zich onderwater bevindt zal er een opwaartse kracht gelijk aan het gewicht van het verplaatste water op de poer aanwezig zijn. Het effectieve gewicht van de poer reduceert hierdoor tot 1500 kg/m^3. Inclusief partiële factor van 0,9 volgt 1350 kg/m^3. In totaal bedraagt de factor dan dus 1350/2500 = 0,54.

Eigen gewicht grond op poer
Op de poer ligt 1,5 m grond. Indien het grondwater lager ligt, is de last:

1,5 * 17 = 25,5 kN/m^2

Bij waterstand gelijk aan 0,5m onder maaiveld niveau is de last:

0,5 * 17 + 1,0 * (17-10) = 15,5 kN/m^2

Inclusief partiële factor van 0,9 volgt 13,95 kN/m^2. In totaal bedraagt de factor dan dus 13,95/25,5 = 0,54.

Reken met droge grond en pas een partiële factor van 0,54 op eigen gewicht poer en grond toe in het geval deze gunstig werken.

Belastingen uit de mast
Zie rapport 'Afleiding belasting uit masten' (§0).

Er wordt gerekend met de volgende, donker aangegeven ULS en SLS lasten uit het rapport. De overige lasten zijn met deze gevallen afgedekt.

Voor het variabele deel dat zijn oorsprong vindt in wind, wordt gerekend met

ψ_0	ψ_1	ψ_2
0,6	0,2	0

ULS Mast	Wind	Loadcase	M_{langs}	M_{dwars}	N	V_{langs}	V_{dwars}
W4H400Z+5	90 deg	3	0	44494	1133	0	1119
W4H400Z+5	45 deg	1a	16697	31259	749	436	799
W4H400Z+5	45 deg	3	24827	13896	943	780	434
W4H400Z+5	90 deg	1a	-9505	20923	970	-260	683
W4H400Z+5	90 deg	3	-11374	20604	992	-318	663
W4H400ZA+5	90 deg	1a	7658	15619	986	188	421
W4H400ZA+5	90 deg	3	7995	10376	1111	197	264
W4H400ZA+5	-45 deg	1a	9456	9314	986	259	254
W4H400ZA+5	90 deg	1a	5652	10385	986	139	292
W4H400ZA+5	90 deg	3	6162	8221	1014	152	212
W4H400ZA+5	90 deg	3	35215	4924	943	880	130

W4H400ZA+10 (Aftakmast 92)	90 deg	1a	6367	23846	1084	137	570
W4H400ZA+10 (Aftakmast 92)	90 deg	3	43362	18257	1190	951	415
W4H400ZA+10 (Aftakmast 92)	90 deg	1a	3804	12106	971	115	390
W4H400ZA+10 (Aftakmast 92)	90 deg	3	4371	10353	995	132	324
W4H400ZA+10 (Aftakmast 92)	90 deg	3	27696	6071	948	865	191

SLS

Type	Wind	Loadcase	M_{langs}	M_{dwars}	N	V_{langs}	V_{dwars}
W4H400Z+5	0 deg	1b	2098	23277	832	77	603
W4H400Z+5	45 deg	1a	9556	27308	832	259	700
W4H400Z+5	90 deg	3	2098	36338	922	77	931
W4H400ZA+5	0 deg	1b	6590	4113	821	188	126
W4H400ZA+5	45 deg	1b	6564	4721	821	187	141
W4H400ZA+5	90 deg	1a	7976	10768	821	221	289
W4H400ZA+5	90 deg	3	8480	8911	905	234	243
W4H400ZA+5	-45 deg	1b	6065	4732	821	190	141
W4H400ZA+10 (Aftakmast 92)	0 deg	1b	7912	8572	896	205	219
W4H400ZA+10 (Aftakmast 92)	90 deg	1a	7700	16972	902	198	403
W4H400ZA+10 (Aftakmast 92)	90 deg	3	9134	15504	972	231	372
W4H400ZA+10 (Aftakmast 92)	-45 deg	1a	9410	11965	898	253	293

Belastingen op maaiveld

Op het maaiveld wordt gerekend met een verdeelde last van 10 kN/m^2 . Er is geen stempellast op de fundering voorzien. Echter, door spreiding van een puntlast over een diepte van 1,5 m, zal een lastvlak van 2 (breedte balk) x 3 (2*1,5) = 6 m^2 ontstaan, waardoor bij 10 kN/m^2 dus ook een puntlast van 60 kN toelaatbaar is.

Voor deze belastingen wordt in de combinatie gerekend met

ψ_0	ψ_1	ψ_2
0,7	0,5	0,3

Belasting t.g.v. temperatuurvariaties in fundering

N.t.b.

Belasting t.g.v. krimp

N.t.b.

3.2.3. BELASTINGCOMBINATIES

Belastingcombinaties in ULS conform vergelijking 6.10b van NEN EN 1990, waarbij:

0,7 * 1,65 = 1,16

En de belastingsfactoren voor de last uit de masten reeds in de ingevoerde belasting is meegenomen (factor 1,0 toegepast)

ULS	Combinatie												
BG	Omschrijving	1	2	3	4	5	6	7	8	9	10	11	12
1	Eigen gewicht	1,3	1,3	1,3	1,3	0,54	0,54	1,3	1,3	1,3	1,3	0,54	0,54
2	Grond	1,3	1,3	1,3	1,3	0,54	0,54	1,3	1,3	1,3	1,3	0,54	0,54
3	Belasting mast ULS 1	1,0		0,6		1,0		-1,0		-0,6		-1,0	
4	Belasting mast ULS 2		1,0		0,6		1,0		-1,0		-0,6		-1,0
7	Belasting op maaiveld	1,16	1,16	1,65	1,65			1,16	1,16	1,65	1,65		

SLS Belastinggeval	Omschrijving	Combi 7	Combi 8	Combi 9	Comb i 10	Combi 11	Combi 12
5	Eigen gewicht	1,0	1,0	1,0	1,0	0,6	0,6
6	Grond	1,0	1,0	1,0	1,0	0,6	0,6
5	Belasting mast SLS 1	1,0		0,6		1,0	
6	Belasting mast SLS 2		1,0		0,6		1,0
7	Belasting op maaiveld	0,7	0,7	1,0	1,0		

SLS	Combinatie												
BG	Omschrijving	13	14	15	16	17	18	19	20	21	22	23	24
1	Eigen gewicht	1,0	1,0	1,0	1,0	0,6	0,6	1,0	1,0	1,0	1,0	0,6	0,6
2	Grond	1,0	1,0	1,0	1,0	0,6	0,6	1,0	1,0	1,0	1,0	0,6	0,6
5	Belasting mast SLS 1	1,0		0,6		1,0		-1,0		-0,6		-1,0	
6	Belasting mast SLS 2		1,0		0,6		1,0		-1,0		-0,6		-1,0
7	Belasting op maaiveld	0,7	0,7	1,0	1,0			0,7	0,7	1,0	1,0		

3.3. WISSELENDE BELASTINGEN EN VERMOEIING

Door de wisselende belastingen van wind dient belasting door vermoeiing te worden meegenomen. Bij vermoeiing is het aantal wisselingen en de grootte van de wisseling van belang. In de NEN-EN 1991-1-4:2005 is in bijlage B.3 een figuur opgenomen waarin de verhouding tussen de grootte van de windlast en het aantal keren dat deze optreedt weergegeven.

B.3 Aantal belastingen voor dynamische respons

(1) Figuur B.3 geeft het aantal keren N_g dat de waarden ΔS van een windeffect worden bereikt of overschreden gedurende een periode van 50 jaar. ΔS wordt uitgedrukt in percentage van de waarde S_k, waar S_k het effect is van een windbelasting met een herhalingstijd van 50 jaar.

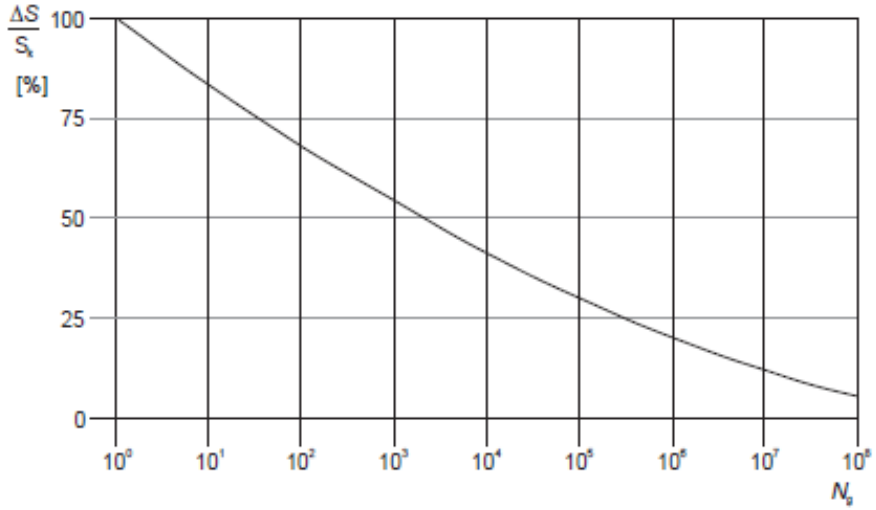

Figuur B.3 — Aantal windvlaagbelastingen N_g voor een effect $\Delta S/S_k$ gedurende een herhalingstijd van 50 jaar

De relatie wordt omschreven met de volgende uitdrukking

$$\frac{\Delta S}{S_k} = 0{,}7 \cdot (\log(N_g))^2 - 17{,}4 \cdot \log(N_g) + 100 \qquad \text{(B.9)}$$

Bij vermoeiing wordt bij een bepaald spanningsniveau het aantal wisselingen op dit spanningsniveau bepaald en vervolgens wordt dit vergeleken met het aantal toelaatbare wisselingen op dat spanningsniveau. Door dit voor de voorkomende spanningsniveaus te doen is de weerstand tegen vermoeiing te controleren.

In de ROK van RWS is bovenstaande verdeling gediscretiseerd tot onderstaande tabel:

Tabel 5-1: Aantal wisselingen per windbelasting (referentieperiode 50 jaar)

ΔS / Sk (%)	n
100	1
98	1
90	8
75	90
61	900
48	9000
36	90000
25	900000
16	9000000
9	90000000

Van beton en wapeningsstaal is bekend hoeveel wisselingen bij een bepaald spanningsniveau toelaatbaar zijn. S_K is de spanning met een herhalingstijd van 50 jaar (de spanning waarop de constructie ontworpen is).

Met bovenstaande gegevens is te bepalen welke maximale spanning t.g.v. wind eens in de 50 jaar toelaatbaar is opdat de constructie ook voldoende weerstand tegen vermoeiing heeft.

Wapening
De totale schade van de belastingen dient volgens de beschadigingsregel van Miner kleiner dan 1 te zijn.
De toetsingsprocedure per wisseling conform NEN-EN 1992-1-1:2005, §6.8.4:
Voor de wapening is gekeken naar de toelaatbare spanning voor:

- Rechte staven
- Staven gebogen met een doordiameter 2,5*D
- Gelaste staven

Er volgt (zie berekening hieronder) dat voor gewone rechte staven er geen beperking is, echter gebogen of gelaste staven hebben de volgende spanningsbeperking

Buigdoorn 2,5ø → 244 N/mm^2
Buigdoorn 5ø → 283 N/mm^2
Gelaste staven → 317 N/mm^2

Omdat bij de toetsing van vermoeiing een ULS toestand met veiligheid 1,0 wordt getoetst, is de spanning altijd minimaal een factor van ca. 1,3 lager dan de normale ULS toestanden.

Bij een toelaatbare spanning van 435 N/mm^2 in ULS volgt bij toetsing op vermoeiing een spanning van maximaal 335 N/mm^2. De toelaatbare spanningen bij vermoeiing zijn nog iets lager. Hier dient in de detaillering rekening mee gehouden te worden. Een toetsing achteraf zal volstaan.

Rechte staven

maximale gebruiksspanning			435	
Toelaatbare spanningswisseling bij N* wisselingen			162,5	
		k1	5	
		k2	9	
		N*	1,00E+06	
	ROK	Wisseling spanning	Toelaatbaar aantal	
aantal wisselingen	dS/S	wapening	wisselingen	Schade
[-]	[-]	[N/mm2]	[-]	[-]
1	100	435	7275	0,000137
1	98	426	8048	0,000124
8	90	392	12320	0,000649
90	75	326	30656	0,002936
900	61	265	86133	0,010449
9000	48	209	285505	0,031523
90000	36	157	1394937	0,064519
900000	25	109	37137862	0,024234
9000000	16	70	2061565470	0,004366
90000000	9	39	365674259232	0,000246
			Totale schade	**0,139183665**

Staven gebogen met doorndiameter 2,5*D

maximale gebruiksspanning			244	
Toelaatbare spanningswisseling bij N* wisselingen			67,4	
		k1	5	
		k2	9	
		N*	1,00E+06	

aantal wisselingen [-]	ROK dS/S [-]	Wisseling spanning wapening [N/mm2]	Toelaatbaar aantal wisselingen [-]	Schade [-]
1	100	244	1613	0,000620
1	98	239	1784	0,000560
8	90	220	2731	0,002929
90	75	183	6796	0,013243
900	61	149	19095	0,047134
9000	48	117	63292	0,142197
90000	36	88	266714	0,337440
900000	25	61	2466861	0,364836
9000000	16	39	136938283	0,065723
90000000	9	22	24289699180	0,003705
			Totale schade	**0,978388484**

Staven gebogen met doorndiameter 5*D

maximale gebruiksspanning			283	
Toelaatbare spanningswisseling bij N* wisselingen			78,0	
		k1	5	
		k2	9	
		N*	1,00E+06	

aantal wisselingen [-]	ROK dS/S [-]	Wisseling spanning wapening [N/mm2]	Toelaatbaar aantal wisselingen [-]	Schade [-]
1	100	283	1591	0,000629
1	98	277	1760	0,000568
8	90	255	2694	0,002970
90	75	212	6702	0,013428
900	61	173	18832	0,047792
9000	48	136	62422	0,144181
90000	36	102	263044	0,342148
900000	25	71	2406099	0,374050
9000000	16	45	133565305	0,067383
90000000	9	25	23691410595	0,003799
			Totale schade	**0,996946687**

Gelaste staven

maximale gebruiksspanning			317	
Toelaatbare spanningswisseling bij N* wisselingen			58,5	
		k1	3	
		k2	5	
		N*	1,00E+07	

aantal wisselingen [-]	ROK dS/S [-]	Wisseling spanning wapening [N/mm2]	Toelaatbaar aantal wisselingen [-]	Schade [-]
1	100	317	62848	0,000016
1	98	311	66775	0,000015
8	90	285	86211	0,000093
90	75	238	148972	0,000604
900	61	193	276886	0,003250
9000	48	152	568285	0,015837
90000	36	114	1347046	0,066813
900000	25	79	4022257	0,223755
9000000	16	51	20411885	0,440920
90000000	9	29	362468668	0,248297
			Totale schade	**0,999600179**

4. VERBINDING MAST-FUNDERING

De masten worden verbonden met de fundering d.m.v. een ingestorte ankerkooi. Een ankerkooi is hieronder weergegeven

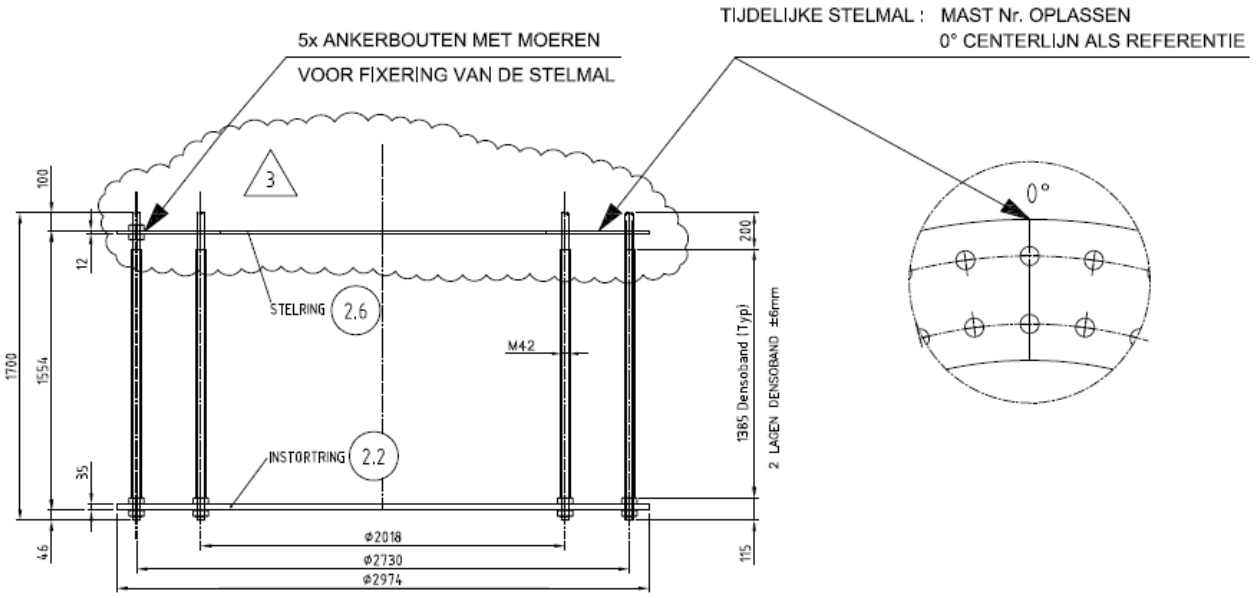

DETAIL VERANKERING

NOTA : ALLE RESTERENDE MOEREN EN ONDERLEGRINGEN WORDEN LOS MEEGELEVERD

Prepared by: LV Revision: 3 Date: 5-7-2011	Material: – Quantity: 2 Equipm. no.: W4E350	**VDL KTI**	Project No.: 36002 Workprep. No.: Pos. No.: ANKERKOOI

De ankers en platen zijn berekend door Volker Infra Design bij het ontwerp van de masten. De ankerkooi bevindt zich in de ronde opstort. De ronde opstort is d.m.v. stekken verbonden met de kruisvormige balken.

4.1. CONTROLE RONDE OPSTORT

De ronde opstort bevat het ankerpakket. Dit ankerpakket verschilt per masttype. De ronde opstort is op het kruisvormige balkrooster geplaatst. Hierdoor is de verbinding met de onderbouw niet continue. In de blauwe gebieden is geen verbinding.

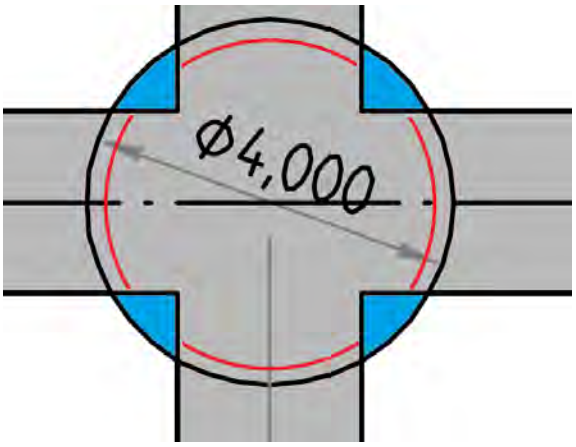

Bij de opstort is alleen de belasting uit de mast van toepassing

De diameter bij de voet van de mast is 2579 en 2758 mm. De belasting uit de mast wordt door de ankers aan de binnen en buitenzijde van de mast centrisch onder de mastwand ingeleid. In deze berekening wordt de mast met de kleinste basis beschouwd (2579mm)

De opstort wordt uitgevoerd in C35/45.

Voor opname van het moment, verwaarloos in de beschouwing het deel van de opstort dat niet boven de balken zit.

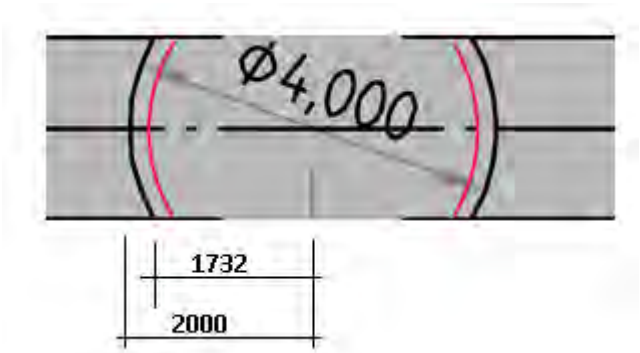

Opname horizontale belasting gelijkmatig over de 4 segmenten verdeelt.
In de berekening wordt de ronding verwaarloosd en een maat van 2x1800 = =3600 lang aangehouden.

Wapening ronde opstort :
M_d = 43362 kNm
d= (0,5* 2579) + 1800-50-16-40= 2980 mm
z ≈ 2700 mm
$N_{d;trek}$ = 16060 kN
$A_{s;d}$ = 16060*10^3 / 435 = 36920 mm^2
Kies 36ø40 = 45238 mm^2
In 2 lagen. Staafafstand:
Balk 2000 mm breed, - 2x100 mm wand = 1800 mm, 18 staven per laag → h.o.h. 100 mm

Toetsing verticale wapening in SLS
$M_{rep;max}$ = 36338 kNm
Staalspanning 36338/43362 * 36920/45238 * 435 = 297 N/mm^2
Conform tabel 7.3N NEN-EN 1992-1-1 geldt bij w_k=0,3mm en h.o.h. 100 mm een toelaatbare spanning van 320 N/mm^2 > 297 N/mm^2, ok

Verankeringslengte (NEN-EN 1992-1-1 §8.4) – in funderingsbalk
$f_{bd;C30/35}$ = 2,25 * 1 * (132-40)/100 * 1,3 = 2,69
$L_{b;rqd}$ = 40/4 * 297/2,69 = 1105 mm
l_{bd} = 1 * 0,7 * 1 *1 * 1 * 1105 = 774 mm

In opstort loopt de staaf door tot bovenzijde. De staaf wordt “gelast” aan het anker, waarbij het anker alle last vanaf de verankeringsplaat in de constructie invoert. Controleer als normale overlapping, conservatief.
Anker zit 1500 mm diep, afstand van anker tot wapeningsstaaf is ca 430 mm. Benodigde overlapping:
$f_{bd;C35/45}$ = 2,25 * 1 * (132-40)/100 * 1,46 = 3,02
$L_{b;rqd}$ = 40/4 * 297/3,02 = 984 mm
l_0 = 1 * 1 * 1 * 1 * 1 * 984 = 984
Verhoogt lengte l_0 met tussenafstand van 430 mm, volgt benodigde lengte 1414 mm. ok

Horizontale wapening bovenzijde opstort

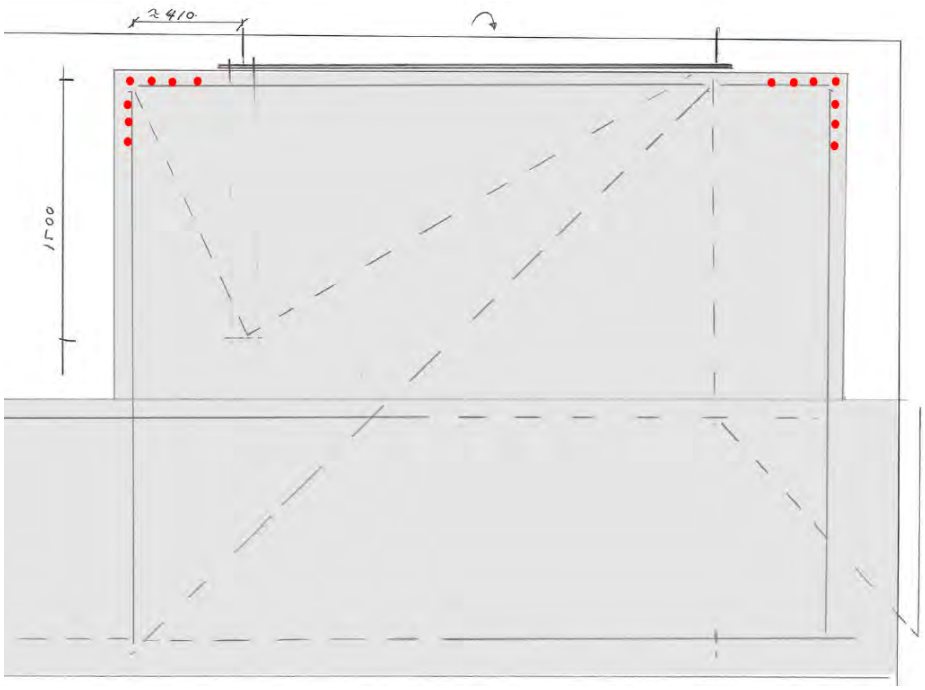

Bepaal spanning bovenzijde met vakwerkmodel. Anker (links) geeft drukdiagonaal welke in bovenvlak evenwicht maakt. Bij verticale last van 16060 kN volgt horizontaal 16060/1500*410 = 4400 kN.
A_{sd} = 4400*10^3 / 435 = 10115 mm^2
Bovenzijde afwapenen met ø25-100 op 2 m breedte dus 21 staven aanwezig is 10290 mm^2. Daarnaast wordt er nog rondlopende wapening bovenin de opstort geplaatst. Pas hiervoor 7 ø20 toe (3 verticaal, 3 horizontaal 1 in de hoek, zie rode stippen in bovenstaande schets). Dit geeft 2 x7ø20 = 4396 mm^2 extra wapening

Toetsing horizontale wapening in SLS (last is gevolg van moment
Staalspanning 36338/43362 * 10115/(10290+4396) * 435 = 251 N/mm^2
Conform tabel 7.3N NEN-EN 1992-1-1 geldt bij w_k=0,3mm en h.o.h. 100 mm een toelaatbare spanning van 320 N/mm^2 > 251 N/mm^2, ok

Flankwapening n.t.b.

4.2. BEREKENING FUNDERING

De poer is ingevoerd in een SCIA engineer model.

Er zijn 2 modellen gedraaid:

Model 1: Lage gescheurde E modulus
Model 2: Matige gescheurde E modulus

5. BIJLAGEN

Bijlage 1 Uitvoer SCIA Engineer – lage E-waarde

Bijlage 2 Uitvoer SCIA Engineer – matige E-waarde

BIJLAGE 1 UITVOER SCIA ENGINEER – LAGE E-WAARDE

1. Inhoudsopgave

1. Inhoudsopgave	1
2. Overzicht	2
3. Materialen	2
4. Doorsneden	2
5. Knoop	3
6. 1D-staaf	3
7. 2D-element	4
8. Subregio	4
9. Knoopondersteuningen	4
10. Lijnondersteuning op staaf	5
11. Belastingsgevallen	11
11.1. Belastingsgevallen - BG1	11
11.1.1. Belasting grafisch	11
11.2. Belastingsgevallen - BG2	11
11.2.1. Vrije oppervlakte last	11
11.2.2. Genereer vrije lasten	12
11.2.3. Belasting grafisch	12
11.3. Belastingsgevallen - BG3	12
11.3.1. Vrije puntmomenten	12
11.3.2. Genereer vrije lasten	13
11.3.3. Belasting grafisch	13
11.4. Belastingsgevallen - BG4	13
11.4.1. Vrije puntmomenten	14
11.4.2. Genereer vrije lasten	14
11.4.3. Belasting grafisch	15
11.5. Belastingsgevallen - BG5	15
11.5.1. Vrije puntmomenten	15
11.5.2. Genereer vrije lasten	15
11.5.3. Belasting grafisch	16
11.6. Belastingsgevallen - BG6	16
11.6.1. Vrije puntmomenten	16
11.6.2. Genereer vrije lasten	17
11.6.3. Belasting grafisch	17
11.7. Belastingsgevallen - BG7	17
11.7.1. Lasten op oppervlak	17
11.7.2. Belasting grafisch	18
12. Combinaties	18
13. Verplaatsing van knopen SLS 1	19
14. Verplaatsing van knopen SLS 2	19
15. Reacties	19
16. 2D element - Interne krachten; mxD+	20
17. 2D element - Interne krachten; mxD-	20
18. 2D element - Interne krachten; myD+	21
19. 2D element - Interne krachten; myD-	21
20. 2D element - Interne krachten; vx	22
21. 2D element - Interne krachten; vy	22

2. Overzicht

3. Materialen

Naam	Type	Massa eenheid [kg/m³]	E-mod [MPa]	Poisson - nu	G-mod [MPa]	Thermisch uitz. [m/mK]	Karakteristieke cylinderdruksterkte fck(28) [MPa]
C30/37	Beton	2500,0	1,1000e+04	0,2	4,5833e+03	0,00	30,00
C35/45	Beton	2500,0	3,4100e+04	0,2	1,4208e+04	0,00	35,00

4. Doorsneden

Naam	CS1	
Type	Rechthoek	
Uitgebreid	450; 450	
Onderdeelmateriaal	C35/45	
Bouwwijze	Algemeen	
Knik y-y, z-z	b	b
EEM berekening	×	

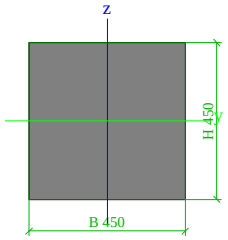

A [m²]	2,0250e-01	
A y, z [m²]	1,6875e-01	1,6875e-01
I y, z [m⁴]	3,4172e-03	3,4172e-03
I w [m⁶], t [m⁴]	0,0000e+00	5,7655e-03
Wel y, z [m³]	1,5188e-02	1,5188e-02
Wpl y, z [m³]	2,2781e-02	2,2781e-02
d y, z [mm]	0	0
c YLCS, ZLCS [mm]	225	225
alpha [deg]	0,00	
AL [m²/m]	1,8000e+00	

5. Knoop

Naam	Coördinaat X [m]	Coördinaat Y [m]	Coördinaat Z [m]
K1	0,000	0,000	0,000
K2	0,000	2,000	0,000
K3	6,800	2,000	0,000
K4	6,800	8,800	0,000
K5	8,800	8,800	0,000
K6	8,800	2,000	0,000
K7	21,950	2,000	0,000
K8	21,950	8,800	0,000
K9	23,950	8,800	0,000
K10	23,950	2,000	0,000
K11	30,750	2,000	0,000
K12	30,750	0,000	0,000
K13	23,950	0,000	0,000
K14	23,950	-6,800	0,000
K15	21,950	-6,800	0,000
K16	21,950	0,000	0,000
K17	8,800	0,000	0,000
K18	8,800	-6,800	0,000
K19	6,800	-6,800	0,000
K20	6,800	0,000	0,000
K21	5,800	1,000	0,000
K23	20,950	1,000	0,000
K25	6,800	-0,732	0,000
K26	8,800	-0,732	0,000
K27	7,800	-1,000	0,000
K28	9,516	0,000	0,000
K29	9,532	2,000	0,000
K30	9,800	1,000	0,000
K31	8,800	2,732	0,000
K32	6,800	2,732	0,000
K33	7,800	3,000	0,000
K34	6,065	2,000	0,000
K35	6,068	0,000	0,000
K36	21,950	-0,732	0,000
K37	23,950	-0,732	0,000
K38	22,950	-1,000	0,000
K39	24,682	0,000	0,000
K40	24,682	2,000	0,000
K41	24,950	1,000	0,000
K42	23,950	2,732	0,000
K43	21,950	2,732	0,000
K44	22,950	3,000	0,000

Naam	Coördinaat X [m]	Coördinaat Y [m]	Coördinaat Z [m]
K45	21,257	2,000	0,000
K46	21,218	0,000	0,000
K47	0,500	0,500	0,000
K48	-1,700	0,500	-22,000
K49	1,700	0,500	0,000
K50	-0,500	0,500	-22,000
K51	2,900	0,500	0,000
K52	2,900	0,500	-22,000
K53	4,100	0,500	0,000
K54	6,300	0,500	-22,000
K55	-1,700	1,500	-22,000
K56	-0,500	1,500	-22,000
K57	2,900	1,500	-22,000
K58	6,300	1,500	-22,000
K59	0,500	1,500	0,000
K60	1,700	1,500	0,000
K61	2,900	1,500	0,000
K62	4,100	1,500	0,000
K63	24,450	0,500	-22,000
K64	27,850	0,500	-22,000
K65	31,250	0,500	-22,000
K66	24,450	1,500	-22,000
K67	27,850	1,500	-22,000
K68	31,250	1,500	-22,000
K69	26,650	0,500	0,000
K70	27,850	0,500	0,000
K71	29,050	0,500	0,000
K72	26,650	1,500	0,000
K73	27,850	1,500	0,000
K74	29,050	1,500	0,000
K75	32,450	0,500	-22,000
K76	32,450	1,500	-22,000
K77	30,250	0,500	0,000
K78	30,250	1,500	0,000
K81	7,300	-8,500	-22,000
K82	7,300	-5,300	-22,000
K85	7,300	-5,300	0,000
K86	7,300	-6,300	0,000
K87	8,300	-8,500	-22,000
K88	8,300	-5,300	-22,000
K89	8,300	-6,300	0,000
K90	8,300	-5,300	0,000

Naam	Coördinaat X [m]	Coördinaat Y [m]	Coördinaat Z [m]
K91	7,300	-1,900	-22,000
K92	8,300	-1,900	-22,000
K93	7,300	-4,100	0,000
K94	8,300	-4,100	0,000
K95	22,475	10,500	-22,000
K96	23,475	10,500	-22,000
K97	22,475	3,900	-22,000
K98	22,475	7,100	-22,000
K99	23,475	3,900	-22,000
K100	23,475	7,100	-22,000
K101	22,475	6,100	0,000
K102	22,475	7,100	0,000
K103	23,475	6,100	0,000
K104	23,475	7,100	0,000
K105	22,475	8,300	0,000
K106	23,475	8,300	0,000
K107	22,450	-8,500	-22,000
K108	22,450	-5,300	-22,000
K109	23,450	-8,500	-22,000
K110	23,450	-5,300	-22,000
K111	22,450	-1,900	-22,000
K112	23,450	-1,900	-22,000
K113	22,450	-6,300	0,000
K114	22,450	-5,300	0,000
K115	23,450	-6,300	0,000
K116	23,450	-5,300	0,000
K117	22,450	-4,100	0,000
K118	23,450	-4,100	0,000
K131	7,325	6,100	0,000
K132	7,325	3,900	-22,000
K133	7,325	7,100	0,000
K134	7,325	7,100	-22,000
K135	8,325	6,100	0,000
K136	8,325	3,900	-22,000
K137	8,325	7,100	0,000
K138	8,325	7,100	-22,000
K139	7,325	8,300	0,000
K140	7,325	10,500	-22,000
K141	8,325	8,300	0,000
K142	8,325	10,500	-22,000

6. 1D-staaf

Naam	Doorsnede	Lengte [m]	Vorm	Beginknoop	Eindknoop	Type	EEM-type	Laag
S1	CS1 - Rechthoek (450; 450)	22,110	Lijn	K47	K48	Algemeen (0)	standaard	Laag1
S2	CS1 - Rechthoek (450; 450)	22,110	Lijn	K49	K50	Algemeen (0)	standaard	Laag1
S3	CS1 - Rechthoek (450; 450)	22,000	Lijn	K51	K52	Algemeen (0)	standaard	Laag1
S4	CS1 - Rechthoek (450; 450)	22,110	Lijn	K53	K54	Algemeen (0)	standaard	Laag1
S5	CS1 - Rechthoek (450; 450)	22,110	Lijn	K59	K55	Algemeen (0)	standaard	Laag1
S6	CS1 - Rechthoek (450; 450)	22,110	Lijn	K60	K56	Algemeen (0)	standaard	Laag1
S7	CS1 - Rechthoek (450; 450)	22,000	Lijn	K61	K57	Algemeen (0)	standaard	Laag1
S8	CS1 - Rechthoek (450; 450)	22,110	Lijn	K62	K58	Algemeen (0)	standaard	Laag1
S9	CS1 - Rechthoek (450; 450)	22,110	Lijn	K69	K63	Algemeen (0)	standaard	Laag1
S10	CS1 - Rechthoek (450; 450)	22,000	Lijn	K70	K64	Algemeen (0)	standaard	Laag1
S11	CS1 - Rechthoek (450; 450)	22,110	Lijn	K71	K65	Algemeen (0)	standaard	Laag1
S12	CS1 - Rechthoek (450; 450)	22,110	Lijn	K72	K66	Algemeen (0)	standaard	Laag1
S13	CS1 - Rechthoek (450; 450)	22,000	Lijn	K73	K67	Algemeen (0)	standaard	Laag1
S14	CS1 - Rechthoek (450; 450)	22,110	Lijn	K74	K68	Algemeen (0)	standaard	Laag1
S15	CS1 - Rechthoek (450; 450)	22,110	Lijn	K77	K75	Algemeen (0)	standaard	Laag1
S16	CS1 - Rechthoek (450; 450)	22,110	Lijn	K78	K76	Algemeen (0)	standaard	Laag1
S19	CS1 - Rechthoek (450; 450)	22,110	Lijn	K86	K81	Algemeen (0)	standaard	Laag1
S20	CS1 - Rechthoek (450; 450)	22,000	Lijn	K85	K82	Algemeen (0)	standaard	Laag1
S21	CS1 - Rechthoek (450; 450)	22,110	Lijn	K89	K87	Algemeen (0)	standaard	Laag1
S22	CS1 - Rechthoek (450; 450)	22,000	Lijn	K90	K88	Algemeen (0)	standaard	Laag1
S23	CS1 - Rechthoek (450; 450)	22,110	Lijn	K93	K91	Algemeen (0)	standaard	Laag1
S24	CS1 - Rechthoek (450; 450)	22,110	Lijn	K94	K92	Algemeen (0)	standaard	Laag1
S25	CS1 - Rechthoek (450; 450)	22,110	Lijn	K101	K97	Algemeen (0)	standaard	Laag1
S26	CS1 - Rechthoek (450; 450)	22,000	Lijn	K102	K98	Algemeen (0)	standaard	Laag1

Naam	Doorsnede	Lengte [m]	Vorm	Beginknoop	Eindknoop	Type	EEM-type	Laag
S27	CS1 - Rechthoek (450; 450)	22,110	Lijn	K103	K99	Algemeen (0)	standaard	Laag1
S28	CS1 - Rechthoek (450; 450)	22,000	Lijn	K104	K100	Algemeen (0)	standaard	Laag1
S29	CS1 - Rechthoek (450; 450)	22,110	Lijn	K105	K95	Algemeen (0)	standaard	Laag1
S30	CS1 - Rechthoek (450; 450)	22,110	Lijn	K106	K96	Algemeen (0)	standaard	Laag1
S31	CS1 - Rechthoek (450; 450)	22,110	Lijn	K113	K107	Algemeen (0)	standaard	Laag1
S32	CS1 - Rechthoek (450; 450)	22,000	Lijn	K114	K108	Algemeen (0)	standaard	Laag1
S33	CS1 - Rechthoek (450; 450)	22,110	Lijn	K115	K109	Algemeen (0)	standaard	Laag1
S34	CS1 - Rechthoek (450; 450)	22,000	Lijn	K116	K110	Algemeen (0)	standaard	Laag1
S35	CS1 - Rechthoek (450; 450)	22,110	Lijn	K117	K111	Algemeen (0)	standaard	Laag1
S36	CS1 - Rechthoek (450; 450)	22,110	Lijn	K118	K112	Algemeen (0)	standaard	Laag1
S43	CS1 - Rechthoek (450; 450)	22,110	Lijn	K131	K132	Algemeen (0)	standaard	Laag1
S44	CS1 - Rechthoek (450; 450)	22,000	Lijn	K133	K134	Algemeen (0)	standaard	Laag1
S45	CS1 - Rechthoek (450; 450)	22,110	Lijn	K135	K136	Algemeen (0)	standaard	Laag1
S46	CS1 - Rechthoek (450; 450)	22,000	Lijn	K137	K138	Algemeen (0)	standaard	Laag1
S47	CS1 - Rechthoek (450; 450)	22,110	Lijn	K139	K140	Algemeen (0)	standaard	Laag1
S48	CS1 - Rechthoek (450; 450)	22,110	Lijn	K141	K142	Algemeen (0)	standaard	Laag1

7. 2D-element

Naam	Materiaal	D. [mm]	Dikte type	Type	Laag
E1	C30/37	1500	konstant	vloer (90)	Laag1

8. Subregio

Naam, 2D-element, Materiaal, Dikte type	Regio1	E1	C30/37	konstant		
2D-element systeemvlak op, Exc. z [mm], D. [mm], Punt 4, Knoop, Rand, Gewicht	Midden	900		3300	K20	Lijn
					K25	Cirkelboog
					K27	
					K26	Lijn
					K17	Lijn
					K28	Cirkelboog
					K30	
					K29	Lijn
					K6	Lijn
					K31	Cirkelboog
					K33	
					K32	Lijn
					K3	Lijn
					K34	Cirkelboog
					K21	
					K35	Lijn

Naam, 2D-element, Materiaal, Dikte type	Regio2	E1	C30/37	konstant		
2D-element systeemvlak op, Exc. z [mm], D. [mm], Punt 4, Knoop, Rand, Gewicht	Midden	900		3300	K16	Lijn
					K36	Cirkelboog
					K38	
					K37	Lijn
					K13	Lijn
					K39	Cirkelboog
					K41	
					K40	Lijn
					K10	Lijn
					K42	Cirkelboog
					K44	
					K43	Lijn
					K7	Lijn
					K45	Cirkelboog
					K23	
					K46	Lijn

9. Knoopondersteuningen

Naam	Knoop	Systeem	Type	X	Y	Z	Stijfheid Z [MN/m]	Rx	Ry	Rz
Sn1	K48	GCS	Standaard	Vrij	Vrij	Verend	9,0000e+01	Vrij	Vrij	Vrij
Sn2	K50	GCS	Standaard	Vrij	Vrij	Verend	9,0000e+01	Vrij	Vrij	Vrij
Sn3	K52	GCS	Standaard	Vrij	Vrij	Verend	9,0000e+01	Vrij	Vrij	Vrij
Sn4	K54	GCS	Standaard	Vrij	Vrij	Verend	9,0000e+01	Vrij	Vrij	Vrij
Sn5	K55	GCS	Standaard	Vrij	Vrij	Verend	9,0000e+01	Vrij	Vrij	Vrij

Naam	Knoop	Systeem	Type	X	Y	Z	Stijfheid Z [MN/m]	Rx	Ry	Rz
Sn6	K56	GCS	Standaard	Vrij	Vrij	Verend	9,0000e+01	Vrij	Vrij	Vrij
Sn7	K57	GCS	Standaard	Vrij	Vrij	Verend	9,0000e+01	Vrij	Vrij	Vrij
Sn8	K58	GCS	Standaard	Vrij	Vrij	Verend	9,0000e+01	Vrij	Vrij	Vrij
Sn9	K81	GCS	Standaard	Vrij	Vrij	Verend	9,0000e+01	Vrij	Vrij	Vrij
Sn10	K82	GCS	Standaard	Vrij	Vrij	Verend	9,0000e+01	Vrij	Vrij	Vrij
Sn11	K87	GCS	Standaard	Vrij	Vrij	Verend	9,0000e+01	Vrij	Vrij	Vrij
Sn12	K88	GCS	Standaard	Vrij	Vrij	Verend	9,0000e+01	Vrij	Vrij	Vrij
Sn13	K91	GCS	Standaard	Vrij	Vrij	Verend	9,0000e+01	Vrij	Vrij	Vrij
Sn14	K92	GCS	Standaard	Vrij	Vrij	Verend	9,0000e+01	Vrij	Vrij	Vrij
Sn15	K132	GCS	Standaard	Vrij	Vrij	Verend	9,0000e+01	Vrij	Vrij	Vrij
Sn16	K134	GCS	Standaard	Vrij	Vrij	Verend	9,0000e+01	Vrij	Vrij	Vrij
Sn17	K136	GCS	Standaard	Vrij	Vrij	Verend	9,0000e+01	Vrij	Vrij	Vrij
Sn18	K138	GCS	Standaard	Vrij	Vrij	Verend	9,0000e+01	Vrij	Vrij	Vrij
Sn19	K140	GCS	Standaard	Vrij	Vrij	Verend	9,0000e+01	Vrij	Vrij	Vrij
Sn20	K142	GCS	Standaard	Vrij	Vrij	Verend	9,0000e+01	Vrij	Vrij	Vrij
Sn21	K63	GCS	Standaard	Vrij	Vrij	Verend	9,0000e+01	Vrij	Vrij	Vrij
Sn22	K64	GCS	Standaard	Vrij	Vrij	Verend	9,0000e+01	Vrij	Vrij	Vrij
Sn23	K65	GCS	Standaard	Vrij	Vrij	Verend	9,0000e+01	Vrij	Vrij	Vrij
Sn24	K66	GCS	Standaard	Vrij	Vrij	Verend	9,0000e+01	Vrij	Vrij	Vrij
Sn25	K67	GCS	Standaard	Vrij	Vrij	Verend	9,0000e+01	Vrij	Vrij	Vrij
Sn26	K68	GCS	Standaard	Vrij	Vrij	Verend	9,0000e+01	Vrij	Vrij	Vrij
Sn27	K75	GCS	Standaard	Vrij	Vrij	Verend	9,0000e+01	Vrij	Vrij	Vrij
Sn28	K76	GCS	Standaard	Vrij	Vrij	Verend	9,0000e+01	Vrij	Vrij	Vrij
Sn29	K95	GCS	Standaard	Vrij	Vrij	Verend	9,0000e+01	Vrij	Vrij	Vrij
Sn30	K96	GCS	Standaard	Vrij	Vrij	Verend	9,0000e+01	Vrij	Vrij	Vrij
Sn31	K97	GCS	Standaard	Vrij	Vrij	Verend	9,0000e+01	Vrij	Vrij	Vrij
Sn32	K98	GCS	Standaard	Vrij	Vrij	Verend	9,0000e+01	Vrij	Vrij	Vrij
Sn33	K99	GCS	Standaard	Vrij	Vrij	Verend	9,0000e+01	Vrij	Vrij	Vrij
Sn34	K100	GCS	Standaard	Vrij	Vrij	Verend	9,0000e+01	Vrij	Vrij	Vrij
Sn35	K107	GCS	Standaard	Vrij	Vrij	Verend	9,0000e+01	Vrij	Vrij	Vrij
Sn36	K108	GCS	Standaard	Vrij	Vrij	Verend	9,0000e+01	Vrij	Vrij	Vrij
Sn37	K109	GCS	Standaard	Vrij	Vrij	Verend	9,0000e+01	Vrij	Vrij	Vrij
Sn38	K110	GCS	Standaard	Vrij	Vrij	Verend	9,0000e+01	Vrij	Vrij	Vrij
Sn39	K111	GCS	Standaard	Vrij	Vrij	Verend	9,0000e+01	Vrij	Vrij	Vrij
Sn40	K112	GCS	Standaard	Vrij	Vrij	Verend	9,0000e+01	Vrij	Vrij	Vrij

10. Lijnondersteuning op staaf

Staaf	Naam Systeem	Pos x_1 [m] Pos x_2 [m]	Coör Oors	X	Y	Stijfheid Y [MN/m²]	Z	Stijfheid Z [MN/m²]	Rx	Ry	Rz
S1	Slb121 LCS	10,900 12,900	Abso Vanaf begin	Vrij	Verend	7,2000e+00	Verend	7,2000e+00	Vrij	Vrij	Vrij
S1	Slb81 LCS	6,400 10,900	Abso Vanaf begin	Vrij	Verend	1,2000e+00	Verend	1,2000e+00	Vrij	Vrij	Vrij
S1	Slb41 LCS	0,900 6,400	Abso Vanaf begin	Vrij	Verend	6,0000e+00	Verend	6,0000e+00	Vrij	Vrij	Vrij
S1	Slb161 LCS	12,900 22,000	Abso Vanaf begin	Vrij	Verend	1,4400e+01	Verend	1,4400e+01	Vrij	Vrij	Vrij
S1	Slb1 LCS	0,000 0,900	Abso Vanaf begin	Vrij	Verend	1,2000e+00	Verend	1,2000e+00	Vrij	Vrij	Vrij
S2	Slb82 LCS	6,400 10,900	Abso Vanaf begin	Vrij	Verend	1,2000e+00	Verend	1,2000e+00	Vrij	Vrij	Vrij
S2	Slb162 LCS	12,900 22,000	Abso Vanaf begin	Vrij	Verend	1,4400e+01	Verend	1,4400e+01	Vrij	Vrij	Vrij
S2	Slb2 LCS	0,000 0,900	Abso Vanaf begin	Vrij	Verend	1,2000e+00	Verend	1,2000e+00	Vrij	Vrij	Vrij
S2	Slb122 LCS	10,900 12,900	Abso Vanaf begin	Vrij	Verend	7,2000e+00	Verend	7,2000e+00	Vrij	Vrij	Vrij
S2	Slb42 LCS	0,900 6,400	Abso Vanaf begin	Vrij	Verend	6,0000e+00	Verend	6,0000e+00	Vrij	Vrij	Vrij
S3	Slb83 LCS	6,400 10,900	Abso Vanaf begin	Vrij	Verend	1,2000e+00	Verend	1,2000e+00	Vrij	Vrij	Vrij
S3	Slb123 LCS	10,900 12,900	Abso Vanaf begin	Vrij	Verend	7,2000e+00	Verend	7,2000e+00	Vrij	Vrij	Vrij
S3	Slb163 LCS	12,900 22,000	Abso Vanaf begin	Vrij	Verend	1,4400e+01	Verend	1,4400e+01	Vrij	Vrij	Vrij
S3	Slb3 LCS	0,000 0,900	Abso Vanaf begin	Vrij	Verend	1,2000e+00	Verend	1,2000e+00	Vrij	Vrij	Vrij
S3	Slb43 LCS	0,900 6,400	Abso Vanaf begin	Vrij	Verend	6,0000e+00	Verend	6,0000e+00	Vrij	Vrij	Vrij

Staaf	Naam Systeem	Pos x_1 [m] Pos x_2 [m]	Coör Oors	X	Y	Stijfheid Y [MN/m²]	Z	Stijfheid Z [MN/m²]	Rx	Ry	Rz
S4	Slb124 LCS	10,900 12,900	Abso Vanaf begin	Vrij	Verend	7,2000e+00	Verend	7,2000e+00	Vrij	Vrij	Vrij
S4	Slb4 LCS	0,000 0,900	Abso Vanaf begin	Vrij	Verend	1,2000e+00	Verend	1,2000e+00	Vrij	Vrij	Vrij
S4	Slb84 LCS	6,400 10,900	Abso Vanaf begin	Vrij	Verend	1,2000e+00	Verend	1,2000e+00	Vrij	Vrij	Vrij
S4	Slb164 LCS	12,900 22,000	Abso Vanaf begin	Vrij	Verend	1,4400e+01	Verend	1,4400e+01	Vrij	Vrij	Vrij
S4	Slb44 LCS	0,900 6,400	Abso Vanaf begin	Vrij	Verend	6,0000e+00	Verend	6,0000e+00	Vrij	Vrij	Vrij
S5	Slb45 LCS	0,900 6,400	Abso Vanaf begin	Vrij	Verend	6,0000e+00	Verend	6,0000e+00	Vrij	Vrij	Vrij
S5	Slb165 LCS	12,900 22,000	Abso Vanaf begin	Vrij	Verend	1,4400e+01	Verend	1,4400e+01	Vrij	Vrij	Vrij
S5	Slb85 LCS	6,400 10,900	Abso Vanaf begin	Vrij	Verend	1,2000e+00	Verend	1,2000e+00	Vrij	Vrij	Vrij
S5	Slb125 LCS	10,900 12,900	Abso Vanaf begin	Vrij	Verend	7,2000e+00	Verend	7,2000e+00	Vrij	Vrij	Vrij
S5	Slb5 LCS	0,000 0,900	Abso Vanaf begin	Vrij	Verend	1,2000e+00	Verend	1,2000e+00	Vrij	Vrij	Vrij
S6	Slb46 LCS	0,900 6,400	Abso Vanaf begin	Vrij	Verend	6,0000e+00	Verend	6,0000e+00	Vrij	Vrij	Vrij
S6	Slb86 LCS	6,400 10,900	Abso Vanaf begin	Vrij	Verend	1,2000e+00	Verend	1,2000e+00	Vrij	Vrij	Vrij
S6	Slb126 LCS	10,900 12,900	Abso Vanaf begin	Vrij	Verend	7,2000e+00	Verend	7,2000e+00	Vrij	Vrij	Vrij
S6	Slb6 LCS	0,000 0,900	Abso Vanaf begin	Vrij	Verend	1,2000e+00	Verend	1,2000e+00	Vrij	Vrij	Vrij
S6	Slb166 LCS	12,900 22,000	Abso Vanaf begin	Vrij	Verend	1,4400e+01	Verend	1,4400e+01	Vrij	Vrij	Vrij
S7	Slb7 LCS	0,000 0,900	Abso Vanaf begin	Vrij	Verend	1,2000e+00	Verend	1,2000e+00	Vrij	Vrij	Vrij
S7	Slb87 LCS	6,400 10,900	Abso Vanaf begin	Vrij	Verend	1,2000e+00	Verend	1,2000e+00	Vrij	Vrij	Vrij
S7	Slb167 LCS	12,900 22,000	Abso Vanaf begin	Vrij	Verend	1,4400e+01	Verend	1,4400e+01	Vrij	Vrij	Vrij
S7	Slb47 LCS	0,900 6,400	Abso Vanaf begin	Vrij	Verend	6,0000e+00	Verend	6,0000e+00	Vrij	Vrij	Vrij
S7	Slb127 LCS	10,900 12,900	Abso Vanaf begin	Vrij	Verend	7,2000e+00	Verend	7,2000e+00	Vrij	Vrij	Vrij
S8	Slb8 LCS	0,000 0,900	Abso Vanaf begin	Vrij	Verend	1,2000e+00	Verend	1,2000e+00	Vrij	Vrij	Vrij
S8	Slb128 LCS	10,900 12,900	Abso Vanaf begin	Vrij	Verend	7,2000e+00	Verend	7,2000e+00	Vrij	Vrij	Vrij
S8	Slb88 LCS	6,400 10,900	Abso Vanaf begin	Vrij	Verend	1,2000e+00	Verend	1,2000e+00	Vrij	Vrij	Vrij
S8	Slb48 LCS	0,900 6,400	Abso Vanaf begin	Vrij	Verend	6,0000e+00	Verend	6,0000e+00	Vrij	Vrij	Vrij
S8	Slb168 LCS	12,900 22,000	Abso Vanaf begin	Vrij	Verend	1,4400e+01	Verend	1,4400e+01	Vrij	Vrij	Vrij
S9	Slb129 LCS	10,900 12,900	Abso Vanaf begin	Vrij	Verend	7,2000e+00	Verend	7,2000e+00	Vrij	Vrij	Vrij
S9	Slb89 LCS	6,400 10,900	Abso Vanaf begin	Vrij	Verend	1,2000e+00	Verend	1,2000e+00	Vrij	Vrij	Vrij
S9	Slb49 LCS	0,900 6,400	Abso Vanaf begin	Vrij	Verend	6,0000e+00	Verend	6,0000e+00	Vrij	Vrij	Vrij
S9	Slb9 LCS	0,000 0,900	Abso Vanaf begin	Vrij	Verend	1,2000e+00	Verend	1,2000e+00	Vrij	Vrij	Vrij
S9	Slb169 LCS	12,900 22,000	Abso Vanaf begin	Vrij	Verend	1,4400e+01	Verend	1,4400e+01	Vrij	Vrij	Vrij
S10	Slb10 LCS	0,000 0,900	Abso Vanaf begin	Vrij	Verend	1,2000e+00	Verend	1,2000e+00	Vrij	Vrij	Vrij
S10	Slb50 LCS	0,900 6,400	Abso Vanaf begin	Vrij	Verend	6,0000e+00	Verend	6,0000e+00	Vrij	Vrij	Vrij
S10	Slb90 LCS	6,400 10,900	Abso Vanaf begin	Vrij	Verend	1,2000e+00	Verend	1,2000e+00	Vrij	Vrij	Vrij
S10	Slb170 LCS	12,900 22,000	Abso Vanaf begin	Vrij	Verend	1,4400e+01	Verend	1,4400e+01	Vrij	Vrij	Vrij
S10	Slb130 LCS	10,900 12,900	Abso Vanaf begin	Vrij	Verend	7,2000e+00	Verend	7,2000e+00	Vrij	Vrij	Vrij
S11	Slb91 LCS	6,400 10,900	Abso Vanaf begin	Vrij	Verend	1,2000e+00	Verend	1,2000e+00	Vrij	Vrij	Vrij

Staaf	Naam Systeem	Pos x_1 [m] Pos x_2 [m]	Coör Oors	X	Y	Stijfheid Y [MN/m²]	Z	Stijfheid Z [MN/m²]	Rx	Ry	Rz
S11	Slb131 LCS	10,900 12,900	Abso Vanaf begin	Vrij	Verend	7,2000e+00	Verend	7,2000e+00	Vrij	Vrij	Vrij
S11	Slb11 LCS	0,000 0,900	Abso Vanaf begin	Vrij	Verend	1,2000e+00	Verend	1,2000e+00	Vrij	Vrij	Vrij
S11	Slb51 LCS	0,900 6,400	Abso Vanaf begin	Vrij	Verend	6,0000e+00	Verend	6,0000e+00	Vrij	Vrij	Vrij
S11	Slb171 LCS	12,900 22,000	Abso Vanaf begin	Vrij	Verend	1,4400e+01	Verend	1,4400e+01	Vrij	Vrij	Vrij
S12	Slb172 LCS	12,900 22,000	Abso Vanaf begin	Vrij	Verend	1,4400e+01	Verend	1,4400e+01	Vrij	Vrij	Vrij
S12	Slb132 LCS	10,900 12,900	Abso Vanaf begin	Vrij	Verend	7,2000e+00	Verend	7,2000e+00	Vrij	Vrij	Vrij
S12	Slb12 LCS	0,000 0,900	Abso Vanaf begin	Vrij	Verend	1,2000e+00	Verend	1,2000e+00	Vrij	Vrij	Vrij
S12	Slb52 LCS	0,900 6,400	Abso Vanaf begin	Vrij	Verend	6,0000e+00	Verend	6,0000e+00	Vrij	Vrij	Vrij
S12	Slb92 LCS	6,400 10,900	Abso Vanaf begin	Vrij	Verend	1,2000e+00	Verend	1,2000e+00	Vrij	Vrij	Vrij
S13	Slb13 LCS	0,000 0,900	Abso Vanaf begin	Vrij	Verend	1,2000e+00	Verend	1,2000e+00	Vrij	Vrij	Vrij
S13	Slb133 LCS	10,900 12,900	Abso Vanaf begin	Vrij	Verend	7,2000e+00	Verend	7,2000e+00	Vrij	Vrij	Vrij
S13	Slb93 LCS	6,400 10,900	Abso Vanaf begin	Vrij	Verend	1,2000e+00	Verend	1,2000e+00	Vrij	Vrij	Vrij
S13	Slb53 LCS	0,900 6,400	Abso Vanaf begin	Vrij	Verend	6,0000e+00	Verend	6,0000e+00	Vrij	Vrij	Vrij
S13	Slb173 LCS	12,900 22,000	Abso Vanaf begin	Vrij	Verend	1,4400e+01	Verend	1,4400e+01	Vrij	Vrij	Vrij
S14	Slb174 LCS	12,900 22,000	Abso Vanaf begin	Vrij	Verend	1,4400e+01	Verend	1,4400e+01	Vrij	Vrij	Vrij
S14	Slb14 LCS	0,000 0,900	Abso Vanaf begin	Vrij	Verend	1,2000e+00	Verend	1,2000e+00	Vrij	Vrij	Vrij
S14	Slb54 LCS	0,900 6,400	Abso Vanaf begin	Vrij	Verend	6,0000e+00	Verend	6,0000e+00	Vrij	Vrij	Vrij
S14	Slb134 LCS	10,900 12,900	Abso Vanaf begin	Vrij	Verend	7,2000e+00	Verend	7,2000e+00	Vrij	Vrij	Vrij
S14	Slb94 LCS	6,400 10,900	Abso Vanaf begin	Vrij	Verend	1,2000e+00	Verend	1,2000e+00	Vrij	Vrij	Vrij
S15	Slb15 LCS	0,000 0,900	Abso Vanaf begin	Vrij	Verend	1,2000e+00	Verend	1,2000e+00	Vrij	Vrij	Vrij
S15	Slb95 LCS	6,400 10,900	Abso Vanaf begin	Vrij	Verend	1,2000e+00	Verend	1,2000e+00	Vrij	Vrij	Vrij
S15	Slb175 LCS	12,900 22,000	Abso Vanaf begin	Vrij	Verend	1,4400e+01	Verend	1,4400e+01	Vrij	Vrij	Vrij
S15	Slb135 LCS	10,900 12,900	Abso Vanaf begin	Vrij	Verend	7,2000e+00	Verend	7,2000e+00	Vrij	Vrij	Vrij
S15	Slb55 LCS	0,900 6,400	Abso Vanaf begin	Vrij	Verend	6,0000e+00	Verend	6,0000e+00	Vrij	Vrij	Vrij
S16	Slb56 LCS	0,900 6,400	Abso Vanaf begin	Vrij	Verend	6,0000e+00	Verend	6,0000e+00	Vrij	Vrij	Vrij
S16	Slb16 LCS	0,000 0,900	Abso Vanaf begin	Vrij	Verend	1,2000e+00	Verend	1,2000e+00	Vrij	Vrij	Vrij
S16	Slb176 LCS	12,900 22,000	Abso Vanaf begin	Vrij	Verend	1,4400e+01	Verend	1,4400e+01	Vrij	Vrij	Vrij
S16	Slb136 LCS	10,900 12,900	Abso Vanaf begin	Vrij	Verend	7,2000e+00	Verend	7,2000e+00	Vrij	Vrij	Vrij
S16	Slb96 LCS	6,400 10,900	Abso Vanaf begin	Vrij	Verend	1,2000e+00	Verend	1,2000e+00	Vrij	Vrij	Vrij
S19	Slb137 LCS	10,900 12,900	Abso Vanaf begin	Vrij	Verend	7,2000e+00	Verend	7,2000e+00	Vrij	Vrij	Vrij
S19	Slb97 LCS	6,400 10,900	Abso Vanaf begin	Vrij	Verend	1,2000e+00	Verend	1,2000e+00	Vrij	Vrij	Vrij
S19	Slb177 LCS	12,900 22,000	Abso Vanaf begin	Vrij	Verend	1,4400e+01	Verend	1,4400e+01	Vrij	Vrij	Vrij
S19	Slb57 LCS	0,900 6,400	Abso Vanaf begin	Vrij	Verend	6,0000e+00	Verend	6,0000e+00	Vrij	Vrij	Vrij
S19	Slb17 LCS	0,000 0,900	Abso Vanaf begin	Vrij	Verend	1,2000e+00	Verend	1,2000e+00	Vrij	Vrij	Vrij
S20	Slb58 LCS	0,900 6,400	Abso Vanaf begin	Vrij	Verend	6,0000e+00	Verend	6,0000e+00	Vrij	Vrij	Vrij
S20	Slb98 LCS	6,400 10,900	Abso Vanaf begin	Vrij	Verend	1,2000e+00	Verend	1,2000e+00	Vrij	Vrij	Vrij

Staaf	Naam Systeem	Pos x_1 [m] Pos x_2 [m]	Coör Oors	X	Y	Stijfheid Y [MN/m²]	Z	Stijfheid Z [MN/m²]	Rx	Ry	Rz
S20	Slb18 LCS	0,000 0,900	Abso Vanaf begin	Vrij	Verend	1,2000e+00	Verend	1,2000e+00	Vrij	Vrij	Vrij
S20	Slb138 LCS	10,900 12,900	Abso Vanaf begin	Vrij	Verend	7,2000e+00	Verend	7,2000e+00	Vrij	Vrij	Vrij
S20	Slb178 LCS	12,900 22,000	Abso Vanaf begin	Vrij	Verend	1,4400e+01	Verend	1,4400e+01	Vrij	Vrij	Vrij
S21	Slb19 LCS	0,000 0,900	Abso Vanaf begin	Vrij	Verend	1,2000e+00	Verend	1,2000e+00	Vrij	Vrij	Vrij
S21	Slb179 LCS	12,900 22,000	Abso Vanaf begin	Vrij	Verend	1,4400e+01	Verend	1,4400e+01	Vrij	Vrij	Vrij
S21	Slb139 LCS	10,900 12,900	Abso Vanaf begin	Vrij	Verend	7,2000e+00	Verend	7,2000e+00	Vrij	Vrij	Vrij
S21	Slb59 LCS	0,900 6,400	Abso Vanaf begin	Vrij	Verend	6,0000e+00	Verend	6,0000e+00	Vrij	Vrij	Vrij
S21	Slb99 LCS	6,400 10,900	Abso Vanaf begin	Vrij	Verend	1,2000e+00	Verend	1,2000e+00	Vrij	Vrij	Vrij
S22	Slb180 LCS	12,900 22,000	Abso Vanaf begin	Vrij	Verend	1,4400e+01	Verend	1,4400e+01	Vrij	Vrij	Vrij
S22	Slb100 LCS	6,400 10,900	Abso Vanaf begin	Vrij	Verend	1,2000e+00	Verend	1,2000e+00	Vrij	Vrij	Vrij
S22	Slb140 LCS	10,900 12,900	Abso Vanaf begin	Vrij	Verend	7,2000e+00	Verend	7,2000e+00	Vrij	Vrij	Vrij
S22	Slb60 LCS	0,900 6,400	Abso Vanaf begin	Vrij	Verend	6,0000e+00	Verend	6,0000e+00	Vrij	Vrij	Vrij
S22	Slb20 LCS	0,000 0,900	Abso Vanaf begin	Vrij	Verend	1,2000e+00	Verend	1,2000e+00	Vrij	Vrij	Vrij
S23	Slb141 LCS	10,900 12,900	Abso Vanaf begin	Vrij	Verend	7,2000e+00	Verend	7,2000e+00	Vrij	Vrij	Vrij
S23	Slb181 LCS	12,900 22,000	Abso Vanaf begin	Vrij	Verend	1,4400e+01	Verend	1,4400e+01	Vrij	Vrij	Vrij
S23	Slb61 LCS	0,900 6,400	Abso Vanaf begin	Vrij	Verend	6,0000e+00	Verend	6,0000e+00	Vrij	Vrij	Vrij
S23	Slb21 LCS	0,000 0,900	Abso Vanaf begin	Vrij	Verend	1,2000e+00	Verend	1,2000e+00	Vrij	Vrij	Vrij
S23	Slb101 LCS	6,400 10,900	Abso Vanaf begin	Vrij	Verend	1,2000e+00	Verend	1,2000e+00	Vrij	Vrij	Vrij
S24	Slb62 LCS	0,900 6,400	Abso Vanaf begin	Vrij	Verend	6,0000e+00	Verend	6,0000e+00	Vrij	Vrij	Vrij
S24	Slb182 LCS	12,900 22,000	Abso Vanaf begin	Vrij	Verend	1,4400e+01	Verend	1,4400e+01	Vrij	Vrij	Vrij
S24	Slb142 LCS	10,900 12,900	Abso Vanaf begin	Vrij	Verend	7,2000e+00	Verend	7,2000e+00	Vrij	Vrij	Vrij
S24	Slb22 LCS	0,000 0,900	Abso Vanaf begin	Vrij	Verend	1,2000e+00	Verend	1,2000e+00	Vrij	Vrij	Vrij
S24	Slb102 LCS	6,400 10,900	Abso Vanaf begin	Vrij	Verend	1,2000e+00	Verend	1,2000e+00	Vrij	Vrij	Vrij
S25	Slb183 LCS	12,900 22,000	Abso Vanaf begin	Vrij	Verend	1,4400e+01	Verend	1,4400e+01	Vrij	Vrij	Vrij
S25	Slb23 LCS	0,000 0,900	Abso Vanaf begin	Vrij	Verend	1,2000e+00	Verend	1,2000e+00	Vrij	Vrij	Vrij
S25	Slb63 LCS	0,900 6,400	Abso Vanaf begin	Vrij	Verend	6,0000e+00	Verend	6,0000e+00	Vrij	Vrij	Vrij
S25	Slb103 LCS	6,400 10,900	Abso Vanaf begin	Vrij	Verend	1,2000e+00	Verend	1,2000e+00	Vrij	Vrij	Vrij
S25	Slb143 LCS	10,900 12,900	Abso Vanaf begin	Vrij	Verend	7,2000e+00	Verend	7,2000e+00	Vrij	Vrij	Vrij
S26	Slb24 LCS	0,000 0,900	Abso Vanaf begin	Vrij	Verend	1,2000e+00	Verend	1,2000e+00	Vrij	Vrij	Vrij
S26	Slb104 LCS	6,400 10,900	Abso Vanaf begin	Vrij	Verend	1,2000e+00	Verend	1,2000e+00	Vrij	Vrij	Vrij
S26	Slb184 LCS	12,900 22,000	Abso Vanaf begin	Vrij	Verend	1,4400e+01	Verend	1,4400e+01	Vrij	Vrij	Vrij
S26	Slb64 LCS	0,900 6,400	Abso Vanaf begin	Vrij	Verend	6,0000e+00	Verend	6,0000e+00	Vrij	Vrij	Vrij
S26	Slb144 LCS	10,900 12,900	Abso Vanaf begin	Vrij	Verend	7,2000e+00	Verend	7,2000e+00	Vrij	Vrij	Vrij
S27	Slb145 LCS	10,900 12,900	Abso Vanaf begin	Vrij	Verend	7,2000e+00	Verend	7,2000e+00	Vrij	Vrij	Vrij
S27	Slb65 LCS	0,900 6,400	Abso Vanaf begin	Vrij	Verend	6,0000e+00	Verend	6,0000e+00	Vrij	Vrij	Vrij
S27	Slb185 LCS	12,900 22,000	Abso Vanaf begin	Vrij	Verend	1,4400e+01	Verend	1,4400e+01	Vrij	Vrij	Vrij

Staaf	Naam Systeem	Pos x_1 [m] Pos x_2 [m]	Coör Oors	X	Y	Stijfheid Y [MN/m²]	Z	Stijfheid Z [MN/m²]	Rx	Ry	Rz
S27	Slb25 LCS	0,000 0,900	Abso Vanaf begin	Vrij	Verend	1,2000e+00	Verend	1,2000e+00	Vrij	Vrij	Vrij
S27	Slb105 LCS	6,400 10,900	Abso Vanaf begin	Vrij	Verend	1,2000e+00	Verend	1,2000e+00	Vrij	Vrij	Vrij
S28	Slb66 LCS	0,900 6,400	Abso Vanaf begin	Vrij	Verend	6,0000e+00	Verend	6,0000e+00	Vrij	Vrij	Vrij
S28	Slb26 LCS	0,000 0,900	Abso Vanaf begin	Vrij	Verend	1,2000e+00	Verend	1,2000e+00	Vrij	Vrij	Vrij
S28	Slb106 LCS	6,400 10,900	Abso Vanaf begin	Vrij	Verend	1,2000e+00	Verend	1,2000e+00	Vrij	Vrij	Vrij
S28	Slb186 LCS	12,900 22,000	Abso Vanaf begin	Vrij	Verend	1,4400e+01	Verend	1,4400e+01	Vrij	Vrij	Vrij
S28	Slb146 LCS	10,900 12,900	Abso Vanaf begin	Vrij	Verend	7,2000e+00	Verend	7,2000e+00	Vrij	Vrij	Vrij
S29	Slb27 LCS	0,000 0,900	Abso Vanaf begin	Vrij	Verend	1,2000e+00	Verend	1,2000e+00	Vrij	Vrij	Vrij
S29	Slb187 LCS	12,900 22,000	Abso Vanaf begin	Vrij	Verend	1,4400e+01	Verend	1,4400e+01	Vrij	Vrij	Vrij
S29	Slb107 LCS	6,400 10,900	Abso Vanaf begin	Vrij	Verend	1,2000e+00	Verend	1,2000e+00	Vrij	Vrij	Vrij
S29	Slb67 LCS	0,900 6,400	Abso Vanaf begin	Vrij	Verend	6,0000e+00	Verend	6,0000e+00	Vrij	Vrij	Vrij
S29	Slb147 LCS	10,900 12,900	Abso Vanaf begin	Vrij	Verend	7,2000e+00	Verend	7,2000e+00	Vrij	Vrij	Vrij
S30	Slb68 LCS	0,900 6,400	Abso Vanaf begin	Vrij	Verend	6,0000e+00	Verend	6,0000e+00	Vrij	Vrij	Vrij
S30	Slb28 LCS	0,000 0,900	Abso Vanaf begin	Vrij	Verend	1,2000e+00	Verend	1,2000e+00	Vrij	Vrij	Vrij
S30	Slb108 LCS	6,400 10,900	Abso Vanaf begin	Vrij	Verend	1,2000e+00	Verend	1,2000e+00	Vrij	Vrij	Vrij
S30	Slb188 LCS	12,900 22,000	Abso Vanaf begin	Vrij	Verend	1,4400e+01	Verend	1,4400e+01	Vrij	Vrij	Vrij
S30	Slb148 LCS	10,900 12,900	Abso Vanaf begin	Vrij	Verend	7,2000e+00	Verend	7,2000e+00	Vrij	Vrij	Vrij
S31	Slb189 LCS	12,900 22,000	Abso Vanaf begin	Vrij	Verend	1,4400e+01	Verend	1,4400e+01	Vrij	Vrij	Vrij
S31	Slb149 LCS	10,900 12,900	Abso Vanaf begin	Vrij	Verend	7,2000e+00	Verend	7,2000e+00	Vrij	Vrij	Vrij
S31	Slb29 LCS	0,000 0,900	Abso Vanaf begin	Vrij	Verend	1,2000e+00	Verend	1,2000e+00	Vrij	Vrij	Vrij
S31	Slb109 LCS	6,400 10,900	Abso Vanaf begin	Vrij	Verend	1,2000e+00	Verend	1,2000e+00	Vrij	Vrij	Vrij
S31	Slb69 LCS	0,900 6,400	Abso Vanaf begin	Vrij	Verend	6,0000e+00	Verend	6,0000e+00	Vrij	Vrij	Vrij
S32	Slb110 LCS	6,400 10,900	Abso Vanaf begin	Vrij	Verend	1,2000e+00	Verend	1,2000e+00	Vrij	Vrij	Vrij
S32	Slb150 LCS	10,900 12,900	Abso Vanaf begin	Vrij	Verend	7,2000e+00	Verend	7,2000e+00	Vrij	Vrij	Vrij
S32	Slb190 LCS	12,900 22,000	Abso Vanaf begin	Vrij	Verend	1,4400e+01	Verend	1,4400e+01	Vrij	Vrij	Vrij
S32	Slb70 LCS	0,900 6,400	Abso Vanaf begin	Vrij	Verend	6,0000e+00	Verend	6,0000e+00	Vrij	Vrij	Vrij
S32	Slb30 LCS	0,000 0,900	Abso Vanaf begin	Vrij	Verend	1,2000e+00	Verend	1,2000e+00	Vrij	Vrij	Vrij
S33	Slb191 LCS	12,900 22,000	Abso Vanaf begin	Vrij	Verend	1,4400e+01	Verend	1,4400e+01	Vrij	Vrij	Vrij
S33	Slb31 LCS	0,000 0,900	Abso Vanaf begin	Vrij	Verend	1,2000e+00	Verend	1,2000e+00	Vrij	Vrij	Vrij
S33	Slb111 LCS	6,400 10,900	Abso Vanaf begin	Vrij	Verend	1,2000e+00	Verend	1,2000e+00	Vrij	Vrij	Vrij
S33	Slb151 LCS	10,900 12,900	Abso Vanaf begin	Vrij	Verend	7,2000e+00	Verend	7,2000e+00	Vrij	Vrij	Vrij
S33	Slb71 LCS	0,900 6,400	Abso Vanaf begin	Vrij	Verend	6,0000e+00	Verend	6,0000e+00	Vrij	Vrij	Vrij
S34	Slb72 LCS	0,900 6,400	Abso Vanaf begin	Vrij	Verend	6,0000e+00	Verend	6,0000e+00	Vrij	Vrij	Vrij
S34	Slb32 LCS	0,000 0,900	Abso Vanaf begin	Vrij	Verend	1,2000e+00	Verend	1,2000e+00	Vrij	Vrij	Vrij
S34	Slb112 LCS	6,400 10,900	Abso Vanaf begin	Vrij	Verend	1,2000e+00	Verend	1,2000e+00	Vrij	Vrij	Vrij
S34	Slb152 LCS	10,900 12,900	Abso Vanaf begin	Vrij	Verend	7,2000e+00	Verend	7,2000e+00	Vrij	Vrij	Vrij

Staaf	Naam Systeem	Pos x_1 [m] Pos x_2 [m]	Coör Oors	X	Y	Stijfheid Y [MN/m²]	Z	Stijfheid Z [MN/m²]	Rx	Ry	Rz
S34	Slb192 LCS	12,900 22,000	Abso Vanaf begin	Vrij	Verend	1,4400e+01	Verend	1,4400e+01	Vrij	Vrij	Vrij
S35	Slb113 LCS	6,400 10,900	Abso Vanaf begin	Vrij	Verend	1,2000e+00	Verend	1,2000e+00	Vrij	Vrij	Vrij
S35	Slb33 LCS	0,000 0,900	Abso Vanaf begin	Vrij	Verend	1,2000e+00	Verend	1,2000e+00	Vrij	Vrij	Vrij
S35	Slb193 LCS	12,900 22,000	Abso Vanaf begin	Vrij	Verend	1,4400e+01	Verend	1,4400e+01	Vrij	Vrij	Vrij
S35	Slb153 LCS	10,900 12,900	Abso Vanaf begin	Vrij	Verend	7,2000e+00	Verend	7,2000e+00	Vrij	Vrij	Vrij
S35	Slb73 LCS	0,900 6,400	Abso Vanaf begin	Vrij	Verend	6,0000e+00	Verend	6,0000e+00	Vrij	Vrij	Vrij
S36	Slb154 LCS	10,900 12,900	Abso Vanaf begin	Vrij	Verend	7,2000e+00	Verend	7,2000e+00	Vrij	Vrij	Vrij
S36	Slb74 LCS	0,900 6,400	Abso Vanaf begin	Vrij	Verend	6,0000e+00	Verend	6,0000e+00	Vrij	Vrij	Vrij
S36	Slb194 LCS	12,900 22,000	Abso Vanaf begin	Vrij	Verend	1,4400e+01	Verend	1,4400e+01	Vrij	Vrij	Vrij
S36	Slb114 LCS	6,400 10,900	Abso Vanaf begin	Vrij	Verend	1,2000e+00	Verend	1,2000e+00	Vrij	Vrij	Vrij
S36	Slb34 LCS	0,000 0,900	Abso Vanaf begin	Vrij	Verend	1,2000e+00	Verend	1,2000e+00	Vrij	Vrij	Vrij
S43	Slb115 LCS	6,400 10,900	Abso Vanaf begin	Vrij	Verend	1,2000e+00	Verend	1,2000e+00	Vrij	Vrij	Vrij
S43	Slb195 LCS	12,900 22,000	Abso Vanaf begin	Vrij	Verend	1,4400e+01	Verend	1,4400e+01	Vrij	Vrij	Vrij
S43	Slb75 LCS	0,900 6,400	Abso Vanaf begin	Vrij	Verend	6,0000e+00	Verend	6,0000e+00	Vrij	Vrij	Vrij
S43	Slb35 LCS	0,000 0,900	Abso Vanaf begin	Vrij	Verend	1,2000e+00	Verend	1,2000e+00	Vrij	Vrij	Vrij
S43	Slb155 LCS	10,900 12,900	Abso Vanaf begin	Vrij	Verend	7,2000e+00	Verend	7,2000e+00	Vrij	Vrij	Vrij
S44	Slb196 LCS	12,900 22,000	Abso Vanaf begin	Vrij	Verend	1,4400e+01	Verend	1,4400e+01	Vrij	Vrij	Vrij
S44	Slb36 LCS	0,000 0,900	Abso Vanaf begin	Vrij	Verend	1,2000e+00	Verend	1,2000e+00	Vrij	Vrij	Vrij
S44	Slb156 LCS	10,900 12,900	Abso Vanaf begin	Vrij	Verend	7,2000e+00	Verend	7,2000e+00	Vrij	Vrij	Vrij
S44	Slb76 LCS	0,900 6,400	Abso Vanaf begin	Vrij	Verend	6,0000e+00	Verend	6,0000e+00	Vrij	Vrij	Vrij
S44	Slb116 LCS	6,400 10,900	Abso Vanaf begin	Vrij	Verend	1,2000e+00	Verend	1,2000e+00	Vrij	Vrij	Vrij
S45	Slb37 LCS	0,000 0,900	Abso Vanaf begin	Vrij	Verend	1,2000e+00	Verend	1,2000e+00	Vrij	Vrij	Vrij
S45	Slb197 LCS	12,900 22,000	Abso Vanaf begin	Vrij	Verend	1,4400e+01	Verend	1,4400e+01	Vrij	Vrij	Vrij
S45	Slb157 LCS	10,900 12,900	Abso Vanaf begin	Vrij	Verend	7,2000e+00	Verend	7,2000e+00	Vrij	Vrij	Vrij
S45	Slb77 LCS	0,900 6,400	Abso Vanaf begin	Vrij	Verend	6,0000e+00	Verend	6,0000e+00	Vrij	Vrij	Vrij
S45	Slb117 LCS	6,400 10,900	Abso Vanaf begin	Vrij	Verend	1,2000e+00	Verend	1,2000e+00	Vrij	Vrij	Vrij
S46	Slb78 LCS	0,900 6,400	Abso Vanaf begin	Vrij	Verend	6,0000e+00	Verend	6,0000e+00	Vrij	Vrij	Vrij
S46	Slb158 LCS	10,900 12,900	Abso Vanaf begin	Vrij	Verend	7,2000e+00	Verend	7,2000e+00	Vrij	Vrij	Vrij
S46	Slb198 LCS	12,900 22,000	Abso Vanaf begin	Vrij	Verend	1,4400e+01	Verend	1,4400e+01	Vrij	Vrij	Vrij
S46	Slb38 LCS	0,000 0,900	Abso Vanaf begin	Vrij	Verend	1,2000e+00	Verend	1,2000e+00	Vrij	Vrij	Vrij
S46	Slb118 LCS	6,400 10,900	Abso Vanaf begin	Vrij	Verend	1,2000e+00	Verend	1,2000e+00	Vrij	Vrij	Vrij
S47	Slb199 LCS	12,900 22,000	Abso Vanaf begin	Vrij	Verend	1,4400e+01	Verend	1,4400e+01	Vrij	Vrij	Vrij
S47	Slb119 LCS	6,400 10,900	Abso Vanaf begin	Vrij	Verend	1,2000e+00	Verend	1,2000e+00	Vrij	Vrij	Vrij
S47	Slb39 LCS	0,000 0,900	Abso Vanaf begin	Vrij	Verend	1,2000e+00	Verend	1,2000e+00	Vrij	Vrij	Vrij
S47	Slb79 LCS	0,900 6,400	Abso Vanaf begin	Vrij	Verend	6,0000e+00	Verend	6,0000e+00	Vrij	Vrij	Vrij
S47	Slb159 LCS	10,900 12,900	Abso Vanaf begin	Vrij	Verend	7,2000e+00	Verend	7,2000e+00	Vrij	Vrij	Vrij

Staaf	Naam Systeem	Pos x_1 [m] Pos x_2 [m]	Coör Oors	X	Y	Stijfheid Y [MN/m²]	Z	Stijfheid Z [MN/m²]	Rx	Ry	Rz
S48	Slb200 LCS	12,900 22,000	Abso Vanaf begin	Vrij	Verend	1,4400e+01	Verend	1,4400e+01	Vrij	Vrij	Vrij
S48	Slb120 LCS	6,400 10,900	Abso Vanaf begin	Vrij	Verend	1,2000e+00	Verend	1,2000e+00	Vrij	Vrij	Vrij
S48	Slb80 LCS	0,900 6,400	Abso Vanaf begin	Vrij	Verend	6,0000e+00	Verend	6,0000e+00	Vrij	Vrij	Vrij
S48	Slb40 LCS	0,000 0,900	Abso Vanaf begin	Vrij	Verend	1,2000e+00	Verend	1,2000e+00	Vrij	Vrij	Vrij
S48	Slb160 LCS	10,900 12,900	Abso Vanaf begin	Vrij	Verend	7,2000e+00	Verend	7,2000e+00	Vrij	Vrij	Vrij

11. Belastingsgevallen

11.1. Belastingsgevallen - BG1

Naam	Omschrijving	Actie type	Lastgroep	Belastingtype	Richting
BG1	Eigengewicht	Permanent	LG8	Eigen gewicht	-Z

11.1.1. Belasting grafisch

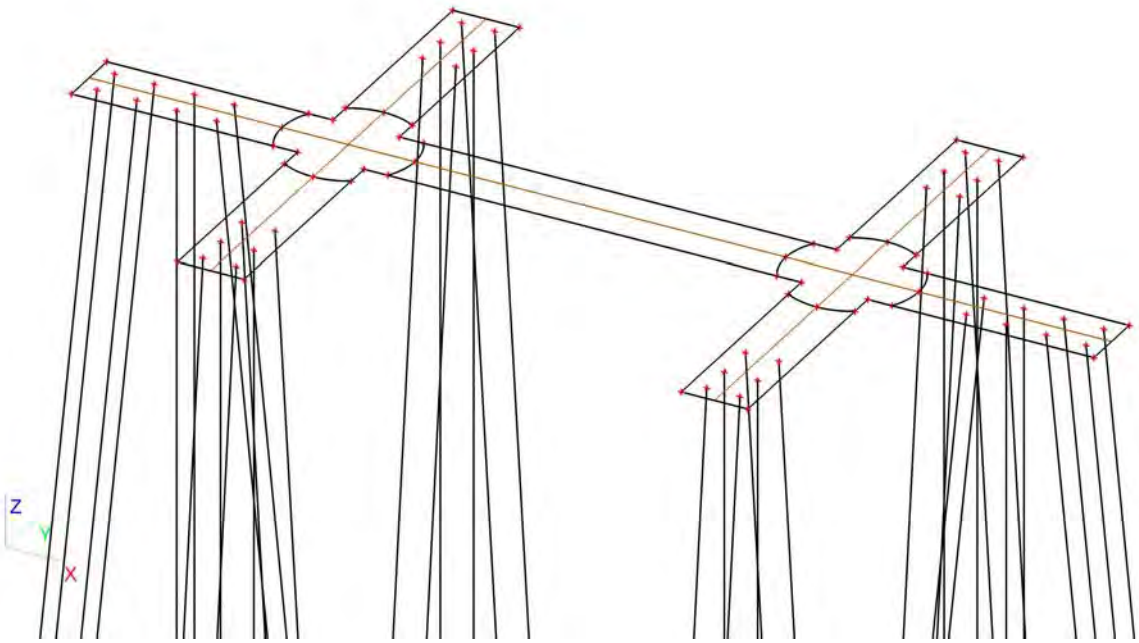

11.2. Belastingsgevallen - BG2

Naam	Omschrijving	Actie type	Lastgroep	Belastingtype
BG2	Grond	Permanent	LG1	Standaard

11.2.1. Vrije oppervlakte last

Naam	Belastingsgeval	Rich	Type	Verdeling	q [kN/m²]	Geldigheid	Selecteer	Systeem	Locatie
FF1	BG2 - Grond	Z	Kracht	Gelijkmatig	-25,50	Alle	Auto	GCS	Lengte
FF2	BG2 - Grond	Z	Kracht	Gelijkmatig	-25,50	Alle	Auto	GCS	Lengte
FF3	BG2 - Grond	Z	Kracht	Gelijkmatig	-25,50	Alle	Auto	GCS	Lengte
FF4	BG2 - Grond	Z	Kracht	Gelijkmatig	-25,50	Alle	Auto	GCS	Lengte
FF5	BG2 - Grond	Z	Kracht	Gelijkmatig	-25,50	Alle	Auto	GCS	Lengte
FF6	BG2 - Grond	Z	Kracht	Gelijkmatig	-25,50	Alle	Auto	GCS	Lengte
FF7	BG2 - Grond	Z	Kracht	Gelijkmatig	-25,50	Alle	Auto	GCS	Lengte

11.2.2. Genereer vrije lasten

Naam	Belastingsgeval	2D-element	Rich Verdeling	Belastingstype Type	Oorspronkelijke belasting	q [kN/m²]	Systeem Locatie
GFF43	BG2 - Grond	E1	Z Gelijkmatig	Oppervlak Kracht	FF1	-25,50	GCS Lengte
GFF44	BG2 - Grond	E1	Z Gelijkmatig	Oppervlak Kracht	FF2	-25,50	GCS Lengte
GFF45	BG2 - Grond	E1	Z Gelijkmatig	Oppervlak Kracht	FF3	-25,50	GCS Lengte
GFF46	BG2 - Grond	E1	Z Gelijkmatig	Oppervlak Kracht	FF4	-25,50	GCS Lengte
GFF47	BG2 - Grond	E1	Z Gelijkmatig	Oppervlak Kracht	FF5	-25,50	GCS Lengte
GFF48	BG2 - Grond	E1	Z Gelijkmatig	Oppervlak Kracht	FF6	-25,50	GCS Lengte
GFF49	BG2 - Grond	E1	Z Gelijkmatig	Oppervlak Kracht	FF7	-25,50	GCS Lengte

11.2.3. Belasting grafisch

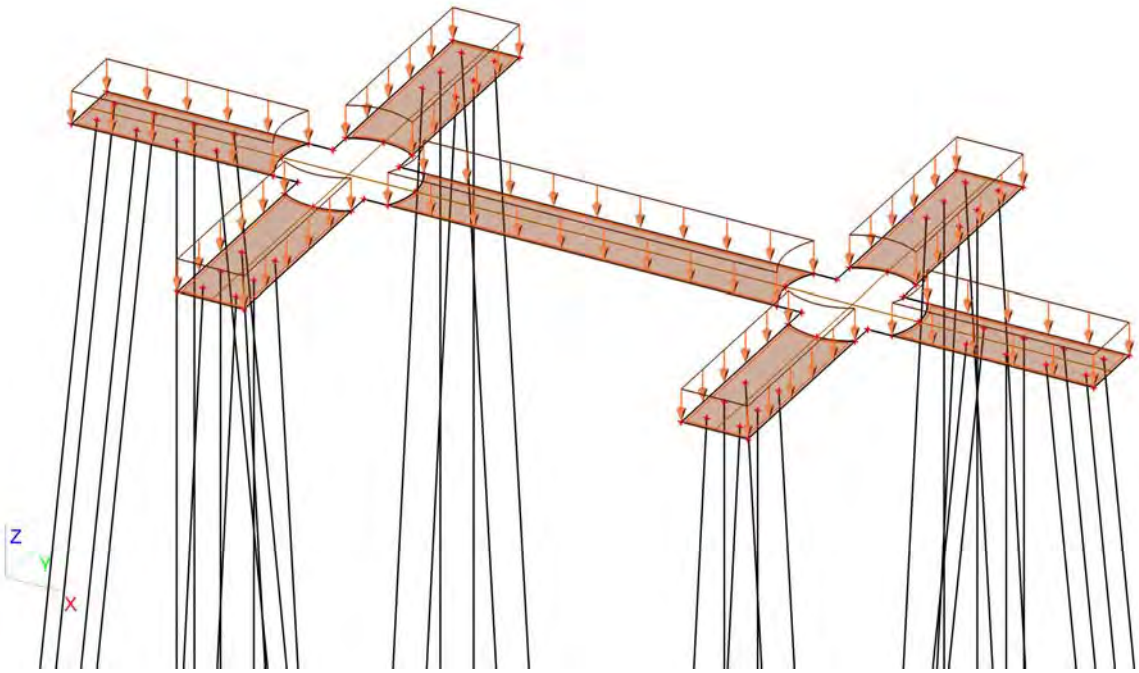

11.3. Belastingsgevallen - BG3

Naam	Omschrijving	Actie type	Lastgroep	Belastingtype	Spec	Duur	'Master' belastingsgeval
BG3	ULS 1	Variabel	LG7	Statisch	Standaard	Kort	Geen

11.3.1. Vrije puntmomenten

Typenaam	Naam	Rich	Type	Geldigheid	Selecteer	Waarde - F [kNm]	Belastingsgeval	Coördinaat X [m]	Coördinaat Y [m]	Coördinaat Z [m]	Coördinaat ux [m]	Coördinaat uy [m]	Coördinaat uz [m]	Systeem
Vrij puntmoment	FM1	Mx	Moment	Alle	Auto	-16697,00	BG3 - ULS 1	7,800	1,000	0,000	7,800	1,000	0,000	GCS
Vrij puntmoment	FM2	Mx	Moment	Alle	Auto	-16697,00	BG3 - ULS 1	22,950	1,000	0,000	7,800	1,000	0,000	GCS
Vrij puntmoment	FM3	My	Moment	Alle	Auto	31259,00	BG3 - ULS 1	7,800	1,000	0,000	7,800	1,000	0,000	GCS
Vrij puntmoment	FM4	My	Moment	Alle	Auto	31259,00	BG3 - ULS 1	22,950	1,000	0,000	22,950	1,000	0,000	GCS
Vrij puntmoment	FM5	Mx	Moment	Alle	Auto	1111,80	BG3 - ULS 1	7,800	1,000	0,000	7,800	1,000	0,000	GCS
Vrij puntmoment	FM6	Mx	Moment	Alle	Auto	1111,80	BG3 - ULS 1	22,950	1,000	0,000	22,950	1,000	0,000	GCS
Vrij puntmoment	FM7	My	Moment	Alle	Auto	2037,45	BG3 - ULS 1	7,800	1,000	0,000	6,800	1,000	0,000	GCS
Vrij puntmoment	FM8	My	Moment	Alle	Auto	2037,45	BG3 - ULS 1	22,950	1,000	0,000	21,950	1,000	0,000	GCS

11.3.2. Genereer vrije lasten

Naam	Belastingsgeval	2D-element	Rich	Belastingstype Type	Oorspronkelijke belasting	Waarde - F [kN] Waarde - F [kNm]	Systeem Locatie
GFF1	BG3 - ULS 1	E1	Z	Punt Kracht	FF1	-749,00	GCS Lengte
GFF2	BG3 - ULS 1	E1	My	Punt Moment	FM7	2037,45	GCS Lengte
GFF4	BG3 - ULS 1	E1	Z	Punt Kracht	FF2	-749,00	GCS Lengte
GFF7	BG3 - ULS 1	E1	Y	Punt Kracht	FF3	436,00	GCS Lengte
GFF8	BG3 - ULS 1	E1	Y	Punt Kracht	FF4	436,00	GCS Lengte
GFF9	BG3 - ULS 1	E1	X	Punt Kracht	FF5	799,00	GCS Lengte
GFF10	BG3 - ULS 1	E1	My	Punt Moment	FM8	2037,45	GCS Lengte
GFF11	BG3 - ULS 1	E1	X	Punt Kracht	FF6	799,00	GCS Lengte
GFF50	BG3 - ULS 1	E1	Mx	Punt Moment	FM1	-16697,00	GCS Lengte
GFF51	BG3 - ULS 1	E1	Mx	Punt Moment	FM2	-16697,00	GCS Lengte
GFF52	BG3 - ULS 1	E1	My	Punt Moment	FM3	31259,00	GCS Lengte
GFF53	BG3 - ULS 1	E1	My	Punt Moment	FM4	31259,00	GCS Lengte
GFF54	BG3 - ULS 1	E1	Mx	Punt Moment	FM5	1111,80	GCS Lengte
GFF55	BG3 - ULS 1	E1	Mx	Punt Moment	FM6	1111,80	GCS Lengte

11.3.3. Belasting grafisch

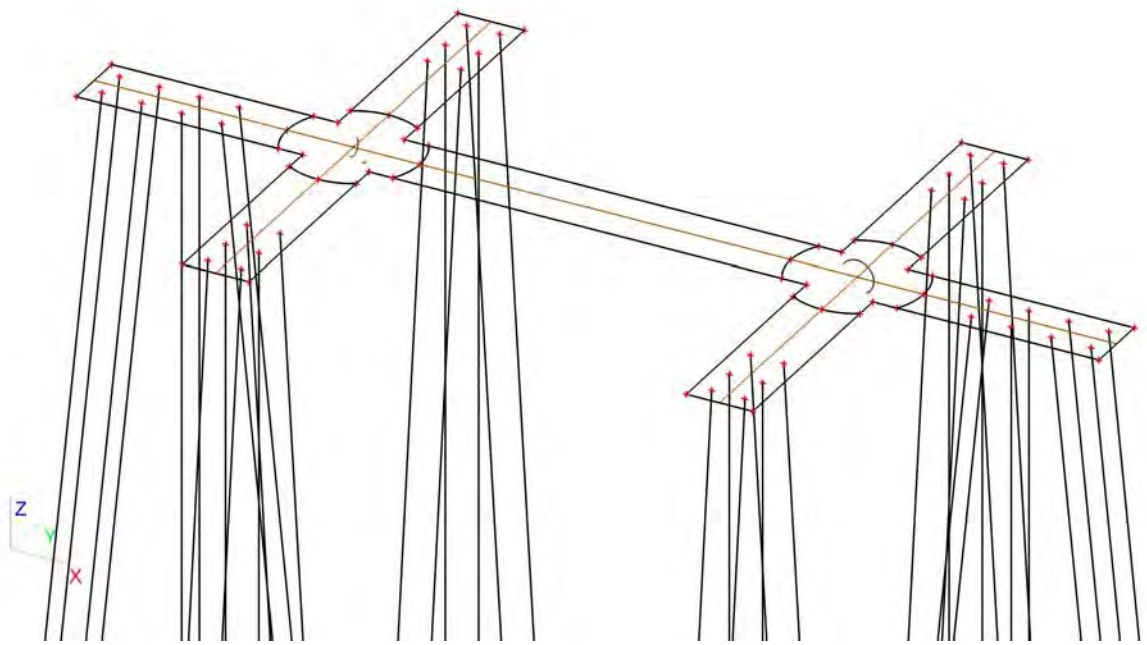

11.4. Belastingsgevallen - BG4

Naam	Omschrijving	Actie type	Lastgroep	Belastingtype	Spec	Duur	'Master' belastingsgeval
BG4	ULS 2	Variabel	LG9	Statisch	Standaard	Kort	Geen

11.4.1. Vrije puntmomenten

Typenaam	Naam	Rich	Type	Geldigheid	Selecteer	Waarde - F [kNm]	Belastingsgeval	Coördinaat X [m]	Coördinaat Y [m]	Coördinaat Z [m]	Coördinaat ux [m]	Coördinaat uy [m]	Coördinaat uz [m]	Systeem
Vrij puntmoment	FM9	Mx	Moment	Alle	Auto	-43362,00	BG4 - ULS 2	7,800	1,000	0,000	6,800	1,000	0,000	GCS
Vrij puntmoment	FM10	Mx	Moment	Alle	Auto	-43362,00	BG4 - ULS 2	22,950	1,000	0,000	21,950	1,000	0,000	GCS
Vrij puntmoment	FM11	My	Moment	Alle	Auto	18257,00	BG4 - ULS 2	7,800	1,000	0,000	6,800	1,000	0,000	GCS
Vrij puntmoment	FM12	My	Moment	Alle	Auto	18257,00	BG4 - ULS 2	22,950	1,000	0,000	21,950	1,000	0,000	GCS
Vrij puntmoment	FM13	Mx	Moment	Alle	Auto	2425,05	BG4 - ULS 2	7,800	1,000	0,000	6,800	1,000	0,000	GCS
Vrij puntmoment	FM14	Mx	Moment	Alle	Auto	2425,05	BG4 - ULS 2	22,950	1,000	0,000	21,950	1,000	0,000	GCS
Vrij puntmoment	FM15	My	Moment	Alle	Auto	1058,25	BG4 - ULS 2	7,800	1,000	0,000	6,800	1,000	0,000	GCS
Vrij puntmoment	FM16	My	Moment	Alle	Auto	1058,25	BG4 - ULS 2	22,950	1,000	0,000	21,950	1,000	0,000	GCS

11.4.2. Genereer vrije lasten

Naam	Belastingsgeval	2D-element	Rich	Belastingstype Type	Oorspronkelijke belasting	Waarde - F [kN] Waarde - F [kNm]	Systeem Locatie
GFF3	BG4 - ULS 2	E1	Z	Punt Kracht	FF8	-1190,00	GCS Lengte
GFF5	BG4 - ULS 2	E1	My	Punt Moment	FM12	18257,00	GCS Lengte
GFF6	BG4 - ULS 2	E1	Y	Punt Kracht	FF9	951,00	GCS Lengte
GFF12	BG4 - ULS 2	E1	Mx	Punt Moment	FM9	-43362,00	GCS Lengte
GFF13	BG4 - ULS 2	E1	Z	Punt Kracht	FF7	-1190,00	GCS Lengte
GFF14	BG4 - ULS 2	E1	Y	Punt Kracht	FF10	951,00	GCS Lengte
GFF15	BG4 - ULS 2	E1	X	Punt Kracht	FF11	415,00	GCS Lengte
GFF17	BG4 - ULS 2	E1	X	Punt Kracht	FF12	415,00	GCS Lengte
GFF32	BG4 - ULS 2	E1	Mx	Punt Moment	FM14	2425,05	GCS Lengte
GFF34	BG4 - ULS 2	E1	My	Punt Moment	FM15	1058,25	GCS Lengte
GFF39	BG4 - ULS 2	E1	Mx	Punt Moment	FM10	-43362,00	GCS Lengte
GFF41	BG4 - ULS 2	E1	My	Punt Moment	FM11	18257,00	GCS Lengte
GFF56	BG4 - ULS 2	E1	Mx	Punt Moment	FM13	2425,05	GCS Lengte
GFF57	BG4 - ULS 2	E1	My	Punt Moment	FM16	1058,25	GCS Lengte

11.4.3. Belasting grafisch

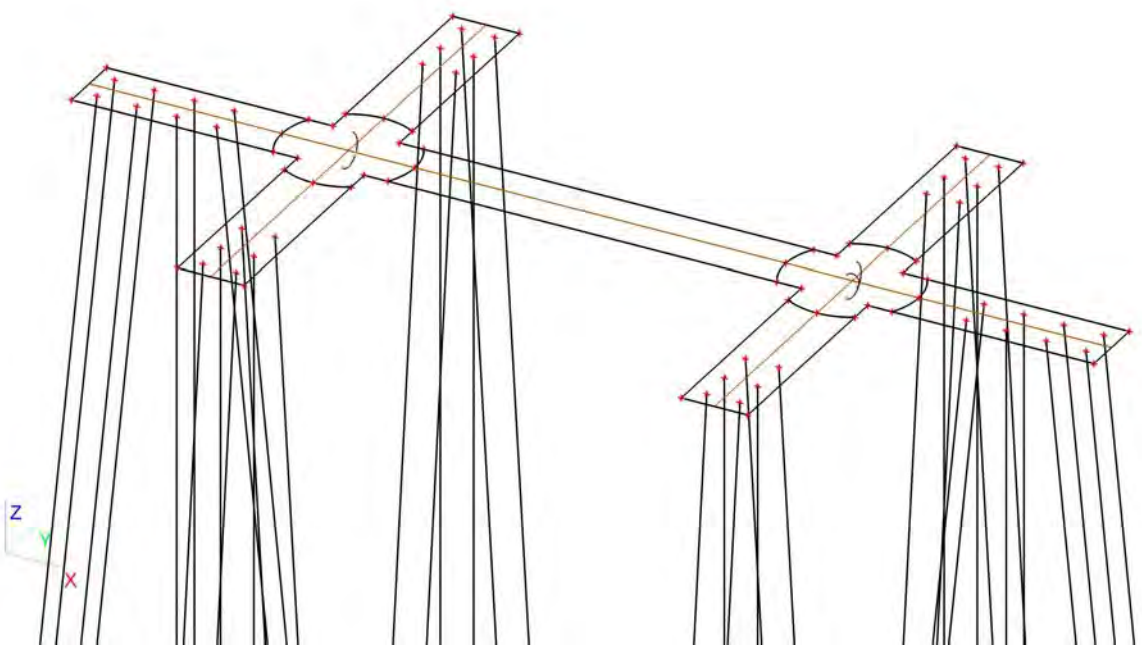

11.5. Belastingsgevallen - BG5

Naam	Omschrijving	Actie type	Lastgroep	Belastingtype	Spec	Duur	'Master' belastingsgeval
BG5	SLS 1	Variabel	LG9	Statisch	Standaard	Kort	Geen

11.5.1. Vrije puntmomenten

Typenaam	Naam	Rich	Type	Geldigheid	Selecteer	Waarde - F [kNm]	Belastingsgeval	Coördinaat X [m]	Coördinaat Y [m]	Coördinaat Z [m]	Coördinaat ux [m]	Coördinaat uy [m]	Coördinaat uz [m]	Systeem
Vrij puntmoment	FM17	Mx	Moment	Alle	Auto	-9556,00	BG5 - SLS 1	7,800	1,000	0,000	6,800	1,000	0,000	GCS
Vrij puntmoment	FM18	Mx	Moment	Alle	Auto	-9556,00	BG5 - SLS 1	22,950	1,000	0,000	6,800	1,000	0,000	GCS
Vrij puntmoment	FM19	My	Moment	Alle	Auto	27308,00	BG5 - SLS 1	7,800	1,000	0,000	6,800	1,000	0,000	GCS
Vrij puntmoment	FM20	My	Moment	Alle	Auto	27308,00	BG5 - SLS 1	22,950	1,000	0,000	21,950	1,000	0,000	GCS
Vrij puntmoment	FM21	Mx	Moment	Alle	Auto	660,45	BG5 - SLS 1	7,800	1,000	0,000	6,800	1,000	0,000	GCS
Vrij puntmoment	FM22	Mx	Moment	Alle	Auto	660,45	BG5 - SLS 1	22,950	1,000	0,000	21,950	1,000	0,000	GCS
Vrij puntmoment	FM23	My	Moment	Alle	Auto	660,45	BG5 - SLS 1	7,800	1,000	0,000	5,800	1,000	0,000	GCS
Vrij puntmoment	FM24	My	Moment	Alle	Auto	660,45	BG5 - SLS 1	22,950	1,000	0,000	20,950	1,000	0,000	GCS
Vrij puntmoment	FM29	Mx	Moment	Alle	Auto	196,35	BG5 - SLS 1	7,800	1,000	0,000	5,800	1,000	0,000	GCS
Vrij puntmoment	FM30	Mx	Moment	Alle	Auto	196,35	BG5 - SLS 1	22,950	1,000	0,000	20,950	1,000	0,000	GCS
Vrij puntmoment	FM31	My	Moment	Alle	Auto	2374,05	BG5 - SLS 1	7,800	1,000	0,000	5,800	1,000	0,000	GCS
Vrij puntmoment	FM32	My	Moment	Alle	Auto	2374,05	BG5 - SLS 1	22,950	1,000	0,000	20,950	1,000	0,000	GCS

11.5.2. Genereer vrije lasten

Naam	Belastingsgeval	2D-element	Rich	Belastingstype Type	Oorspronkelijke belasting	Waarde - F [kN] Waarde - F [kNm]	Systeem Locatie
GFF16	BG5 - SLS 1	E1	Mx	Punt Moment	FM22	660,45	GCS Lengte
GFF18	BG5 - SLS 1	E1	My	Punt Moment	FM23	660,45	GCS Lengte
GFF19	BG5 - SLS 1	E1	Z	Punt Kracht	FF13	-832,00	GCS Lengte
GFF21	BG5 - SLS 1	E1	Z	Punt Kracht	FF14	-832,00	GCS Lengte
GFF22	BG5 - SLS 1	E1	Mx	Punt Moment	FM29	196,35	GCS Lengte
GFF23	BG5 - SLS 1	E1	Y	Punt Kracht	FF15	259,00	GCS Lengte
GFF24	BG5 - SLS 1	E1	Mx	Punt Moment	FM18	-9556,00	GCS Lengte
GFF25	BG5 - SLS 1	E1	Y	Punt Kracht	FF16	259,00	GCS Lengte

Naam	Belastingsgeval	2D-element	Rich	Belastingstype Type	Oorspronkelijke belasting	Waarde - F [kN] Waarde - F [kNm]	Systeem Locatie
GFF26	BG5 - SLS 1	E1	My	Punt Moment	FM19	27308,00	GCS Lengte
GFF27	BG5 - SLS 1	E1	X	Punt Kracht	FF17	700,00	GCS Lengte
GFF28	BG5 - SLS 1	E1	My	Punt Moment	FM24	660,45	GCS Lengte
GFF29	BG5 - SLS 1	E1	X	Punt Kracht	FF18	700,00	GCS Lengte
GFF36	BG5 - SLS 1	E1	My	Punt Moment	FM20	27308,00	GCS Lengte
GFF38	BG5 - SLS 1	E1	Mx	Punt Moment	FM21	660,45	GCS Lengte
GFF58	BG5 - SLS 1	E1	Mx	Punt Moment	FM17	-9556,00	GCS Lengte
GFF61	BG5 - SLS 1	E1	Mx	Punt Moment	FM30	196,35	GCS Lengte
GFF62	BG5 - SLS 1	E1	My	Punt Moment	FM31	2374,05	GCS Lengte
GFF63	BG5 - SLS 1	E1	My	Punt Moment	FM32	2374,05	GCS Lengte

11.5.3. Belasting grafisch

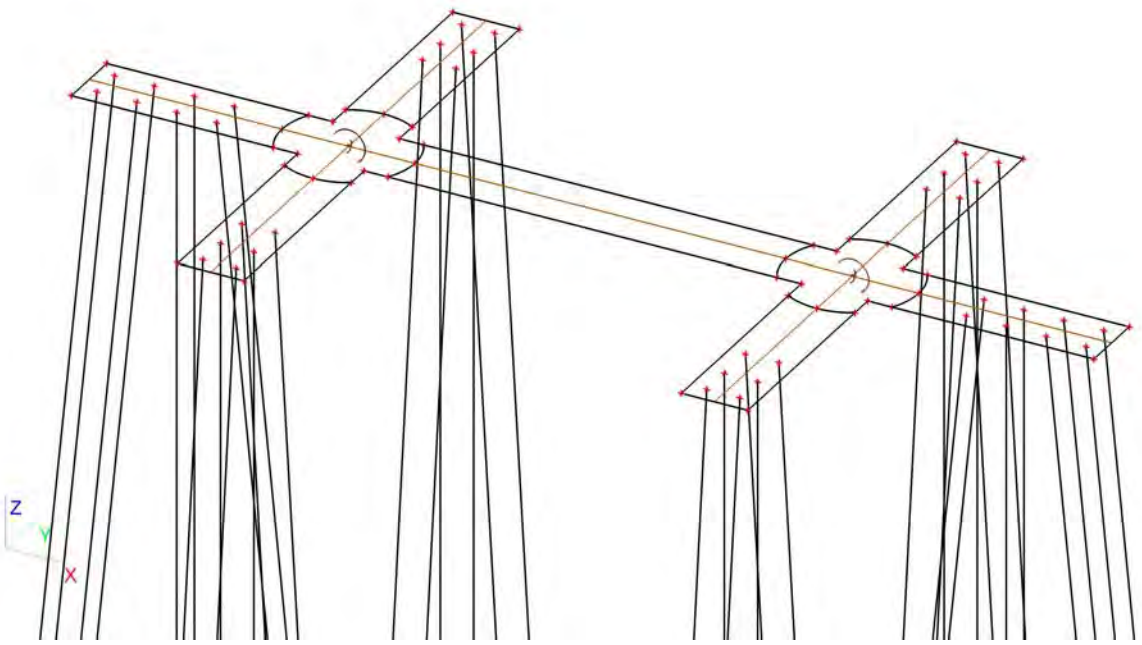

11.6. Belastingsgevallen - BG6

Naam	Omschrijving	Actie type	Lastgroep	Belastingtype	Spec	Duur	'Master' belastingsgeval
BG6	SLS 2	Variabel	LG9	Statisch	Standaard	Kort	Geen

11.6.1. Vrije puntmomenten

Typenaam	Naam	Rich	Type	Geldigheid	Selecteer	Waarde - F [kNm]	Belastingsgeval	Coördinaat X [m]	Coördinaat Y [m]	Coördinaat Z [m]	Coördinaat ux [m]	Coördinaat uy [m]	Coördinaat uz [m]	Systeem
Vrij puntmoment	FM25	Mx	Moment	Alle	Auto	-2098,00	BG6 - SLS 2	7,800	1,000	0,000	5,800	1,000	0,000	GCS
Vrij puntmoment	FM26	Mx	Moment	Alle	Auto	-2098,00	BG6 - SLS 2	22,950	1,000	0,000	20,950	1,000	0,000	GCS
Vrij puntmoment	FM27	My	Moment	Alle	Auto	36338,00	BG6 - SLS 2	7,800	1,000	0,000	5,800	1,000	0,000	GCS
Vrij puntmoment	FM28	My	Moment	Alle	Auto	36338,00	BG6 - SLS 2	22,950	1,000	0,000	20,950	1,000	0,000	GCS

11.6.2. Genereer vrije lasten

Naam	Belastingsgeval	2D-element	Rich	Belastingstype Type	Oorspronkelijke belasting	Waarde - F [kN] Waarde - F [kNm]	Systeem Locatie
GFF20	BG6 - SLS 2	E1	My	Punt Moment	FM28	36338,00	GCS Lengte
GFF30	BG6 - SLS 2	E1	Mx	Punt Moment	FM25	-2098,00	GCS Lengte
GFF31	BG6 - SLS 2	E1	Z	Punt Kracht	FF19	-922,00	GCS Lengte
GFF33	BG6 - SLS 2	E1	Z	Punt Kracht	FF20	-922,00	GCS Lengte
GFF35	BG6 - SLS 2	E1	Y	Punt Kracht	FF21	77,00	GCS Lengte
GFF37	BG6 - SLS 2	E1	Y	Punt Kracht	FF22	77,00	GCS Lengte
GFF40	BG6 - SLS 2	E1	X	Punt Kracht	FF23	931,00	GCS Lengte
GFF42	BG6 - SLS 2	E1	X	Punt Kracht	FF24	931,00	GCS Lengte
GFF59	BG6 - SLS 2	E1	Mx	Punt Moment	FM26	-2098,00	GCS Lengte
GFF60	BG6 - SLS 2	E1	My	Punt Moment	FM27	36338,00	GCS Lengte

11.6.3. Belasting grafisch

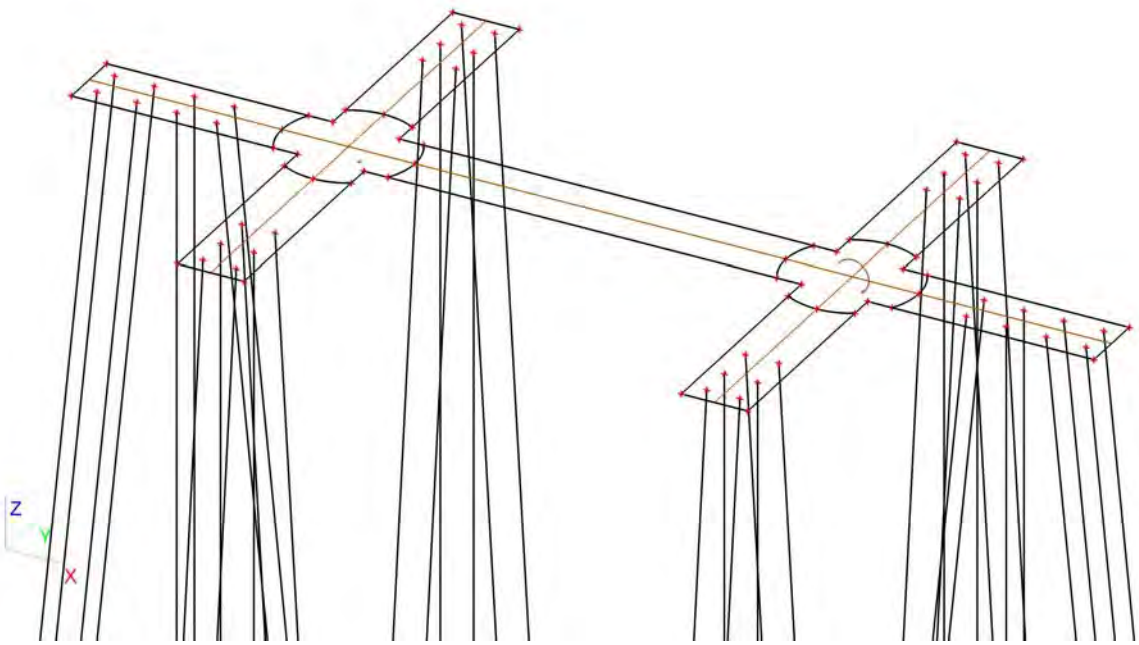

11.7. Belastingsgevallen - BG7

Naam	Omschrijving	Actie type	Lastgroep	Belastingtype	Spec	Duur	'Master' belastingsgeval
BG7	Belasting op maaiveld	Variabel	LG7	Statisch	Standaard	Kort	Geen

11.7.1. Lasten op oppervlak

Naam	Rich	Type	Waarde [kN/m²]	2D-element	Belastingsgeval	Systeem	Loc
SF1	Z	Kracht	-10,00	E1	BG7 - Belasting op maaiveld	LCS	Lengte

11.7.2. Belasting grafisch

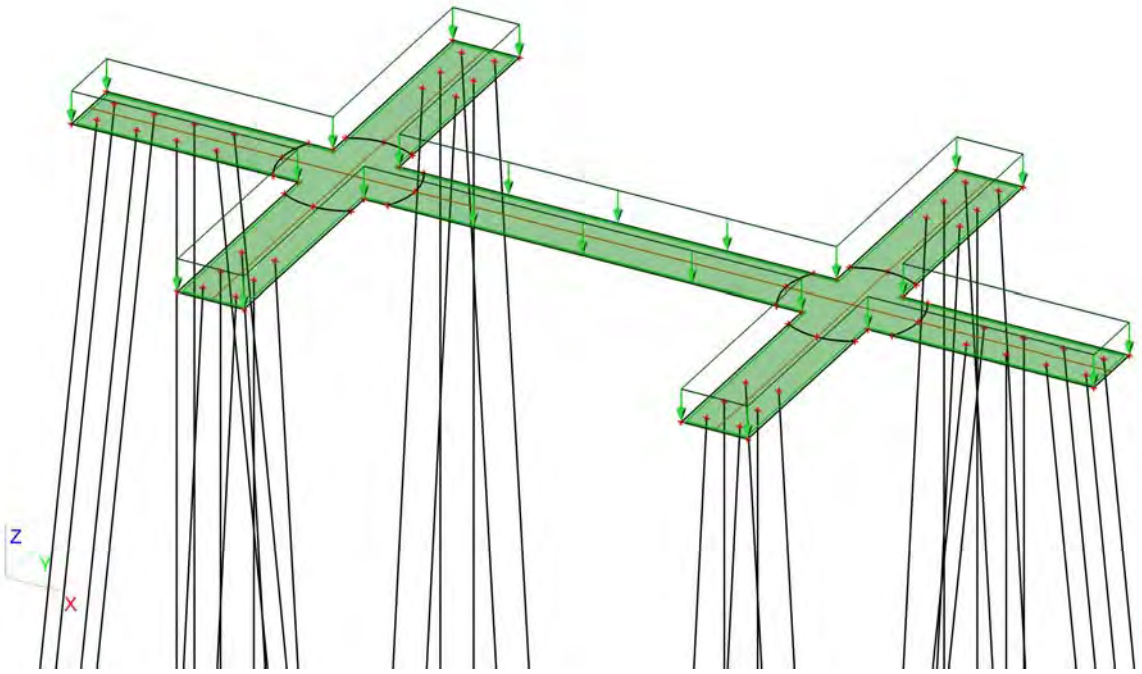

12. Combinaties

Naam	Type	Belastingsgevallen	Coëff. [-]
Combi1	Omhullende - uiterst	BG1 - Eigengewicht	1,30
		BG3 - ULS 1	1,00
		BG7 - Belasting op maaiveld	1,16
		BG2 - Grond	1,30
Combi2	Omhullende - uiterst	BG1 - Eigengewicht	1,30
		BG4 - ULS 2	1,00
		BG7 - Belasting op maaiveld	1,16
		BG2 - Grond	1,30
Combi3	Omhullende - uiterst	BG1 - Eigengewicht	1,30
		BG3 - ULS 1	0,60
		BG7 - Belasting op maaiveld	1,65
		BG2 - Grond	1,30
Combi4	Omhullende - uiterst	BG1 - Eigengewicht	1,30
		BG4 - ULS 2	0,60
		BG7 - Belasting op maaiveld	1,65
		BG2 - Grond	1,30
Combi5	Omhullende - uiterst	BG1 - Eigengewicht	0,54
		BG3 - ULS 1	1,00
		BG2 - Grond	0,54
Combi6	Omhullende - uiterst	BG1 - Eigengewicht	0,54
		BG4 - ULS 2	1,00
		BG2 - Grond	0,54
Combi7	Omhullende - bruikbaarheid	BG1 - Eigengewicht	1,00
		BG5 - SLS 1	1,00
		BG7 - Belasting op maaiveld	1,16
		BG2 - Grond	1,00
Combi8	Omhullende - bruikbaarheid	BG1 - Eigengewicht	1,00
		BG6 - SLS 2	1,00
		BG7 - Belasting op maaiveld	0,70
		BG2 - Grond	1,00
Combi9	Omhullende - bruikbaarheid	BG1 - Eigengewicht	1,00
		BG5 - SLS 1	0,60
		BG7 - Belasting op maaiveld	1,00
		BG2 - Grond	1,00
Combi10	Omhullende -	BG1 - Eigengewicht	1,00
		BG6 - SLS 2	0,60

Naam	Type	Belastingsgevallen	Coëff. [-]
Combi10	Omhullende - bruikbaarheid	BG7 - Belasting op maaiveld	1,00
		BG2 - Grond	1,00
Combi11	Omhullende - bruikbaarheid	BG1 - Eigengewicht	0,60
		BG5 - SLS 1	1,00
		BG2 - Grond	0,60
Combi12	Omhullende - bruikbaarheid	BG1 - Eigengewicht	0,60
		BG6 - SLS 2	1,00
		BG2 - Grond	0,60

13. Verplaatsing van knopen SLS 1

Lineaire berekening, Extreem : Globaal
Selectie : Alle
Belastingsgevallen : BG5

BG	Snede	elem	dx [m]	Ux [mm]	Uy [mm]	Uz [mm]	Fix [mrad]	Fiy [mrad]	Fiz [mrad]
BG5	Snede9	158	0,000	**4,5**	1,3	1,5	0,2	2,0	-0,1
BG5	Snede3	179	0,000	**5,0**	1,3	-9,7	-0,8	2,7	0,0
BG5	Snede2	173	2,000	4,5	**1,2**	-4,1	**-0,9**	**3,3**	0,0
BG5	Snede7	170	4,000	4,9	**1,4**	-5,5	-0,7	2,9	0,0
BG5	Snede3	74	1,707	5,0	1,3	**-11,3**	-0,8	-0,2	0,0
BG5	Snede3	59	10,134	5,0	1,3	**5,5**	-0,8	0,4	0,0
BG5	Snede8	34	4,731	4,9	1,3	-2,9	**0,9**	2,4	0,0
BG5	Snede3	69	6,239	5,0	1,3	-1,5	-0,8	**-2,8**	0,0
BG5	Snede9	168	2,114	4,6	1,3	1,9	0,2	2,1	**-0,1**
BG5	Snede11	120	3,576	4,7	1,3	-1,9	0,1	2,1	**0,1**

14. Verplaatsing van knopen SLS 2

Lineaire berekening, Extreem : Globaal
Selectie : Alle
Belastingsgevallen : BG6

BG	Snede	elem	dx [m]	Ux [mm]	Uy [mm]	Uz [mm]	Fix [mrad]	Fiy [mrad]	Fiz [mrad]
BG6	Snede9	158	0,000	**5,7**	0,4	0,4	0,1	2,5	-0,1
BG6	Snede3	179	0,000	**6,5**	0,4	-11,5	-0,2	3,2	0,0
BG6	Snede5	131	5,800	6,2	**0,3**	-5,1	-0,2	-0,5	0,0
BG6	Snede7	170	4,000	6,3	**0,4**	-5,0	-0,1	3,4	0,0
BG6	Snede3	74	1,707	6,4	0,4	**-13,3**	-0,2	-0,2	0,0
BG6	Snede3	59	10,134	6,4	0,4	**6,8**	-0,2	0,5	0,0
BG6	Snede6	97	2,114	6,2	0,3	-1,9	**-0,8**	3,0	-0,1
BG6	Snede8	34	4,731	6,1	0,4	-1,8	**0,9**	2,9	0,1
BG6	Snede3	69	6,239	6,4	0,4	-1,5	-0,2	**-3,3**	0,0
BG6	Snede2	173	2,000	5,8	0,3	-4,8	-0,2	**4,0**	0,0
BG6	Snede9	168	2,114	5,9	0,4	0,6	0,1	2,5	**-0,1**
BG6	Snede11	120	3,576	6,0	0,4	-0,3	0,0	2,5	**0,1**

15. Reacties

Lineaire berekening, Extreem : Globaal
Selectie : Alle
Klasse : UGT

Steunpunt	BG	dx [m]	Rx [kN]	Ry [kN]	Rz [kN]	Mx [kNm]	My [kNm]	Mz [kNm]
Slb52/S12	Combi1/1	1,817	**-32,99**	-2,38	3,30	0,00	0,00	0,00
Slb172/S12	Combi1/1	21,090	**40,41**	0,01	-4,04	0,00	0,00	0,00
Slb200/S48	Combi2/2	21,090	0,02	**-49,62**	-4,96	0,00	0,00	0,00
Slb197/S45	Combi2/2	21,090	0,03	**69,49**	-6,95	0,00	0,00	0,00
Sn9/K81	Combi6/3		0,00	0,00	**-390,29**	0,00	0,00	0,00
Sn17/K136	Combi2/2		0,00	0,00	**1483,54**	0,00	0,00	0,00
Sn1/K48	Combi1/4		0,00	0,00	147,22	**0,00**	**0,00**	**0,00**

16. 2D element - Interne krachten; mxD+

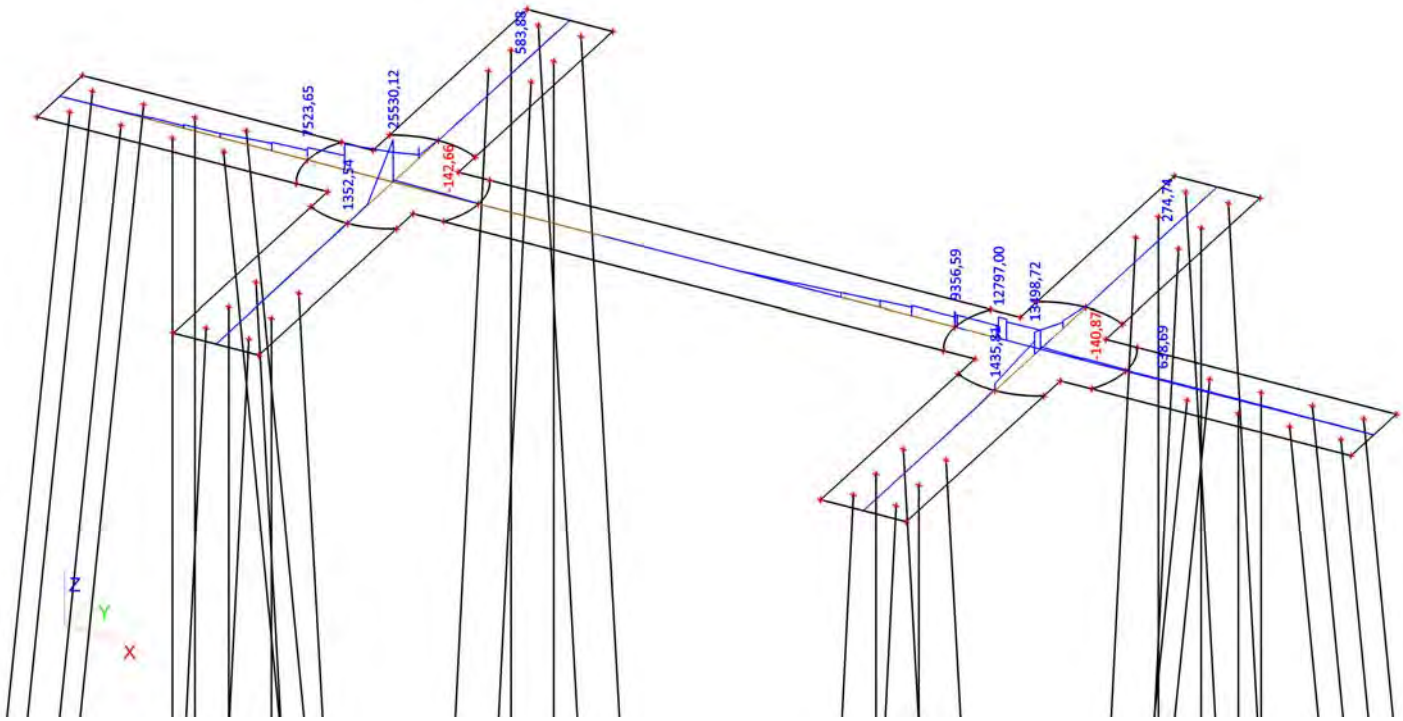

17. 2D element - Interne krachten; mxD-

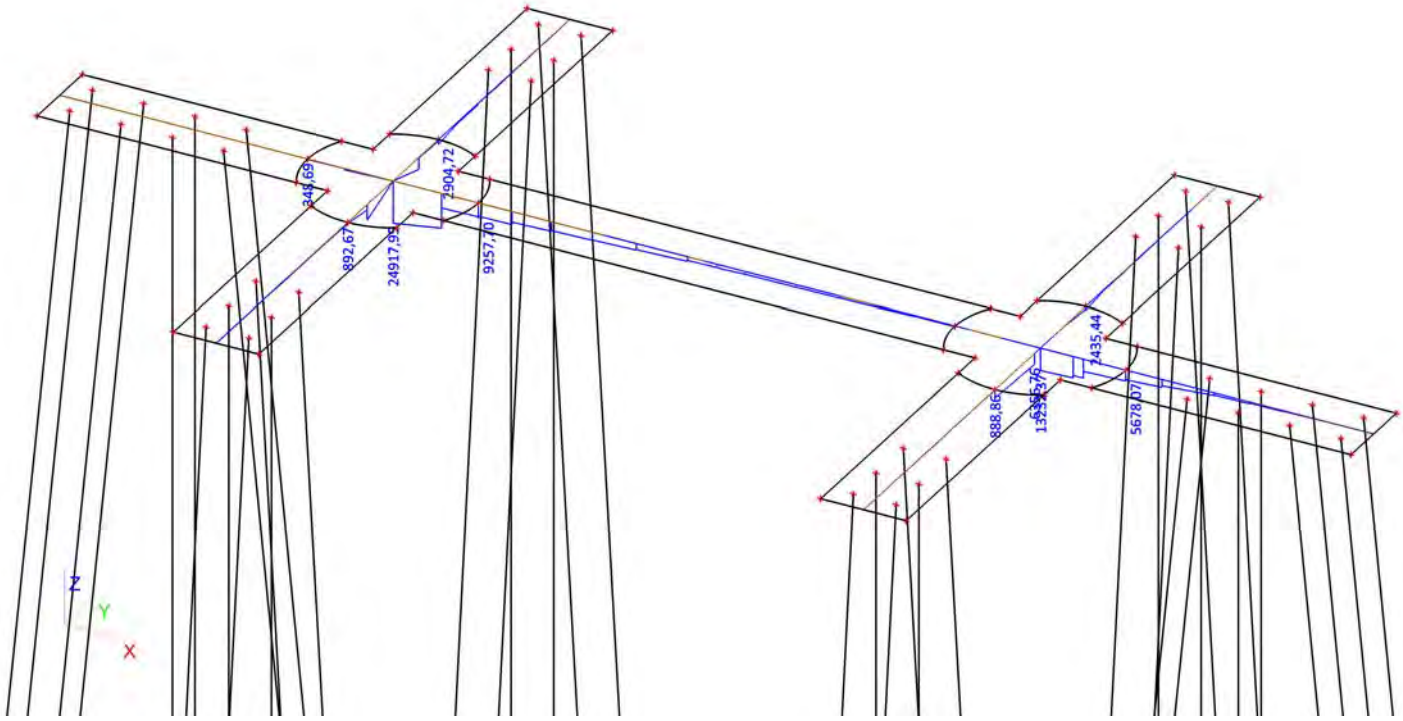

18. 2D element - Interne krachten; myD+

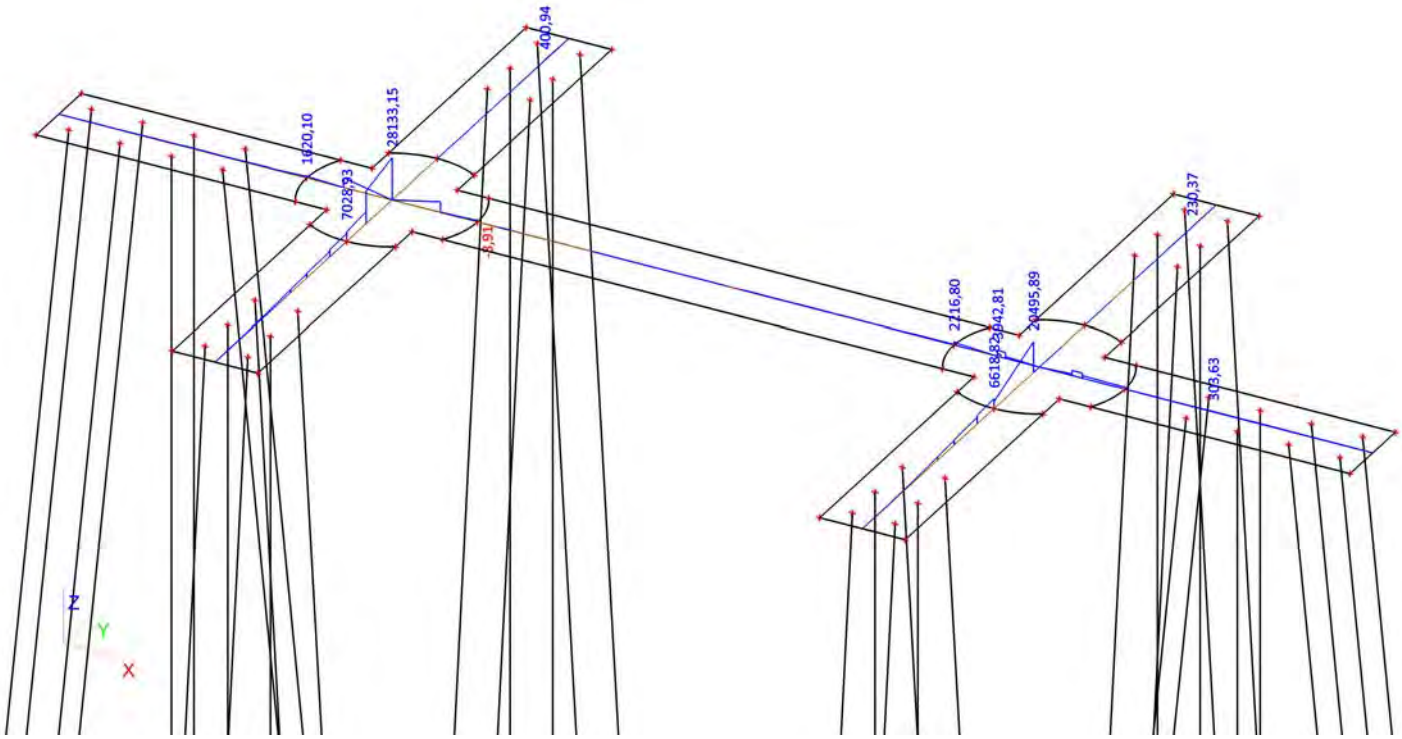

19. 2D element - Interne krachten; myD-

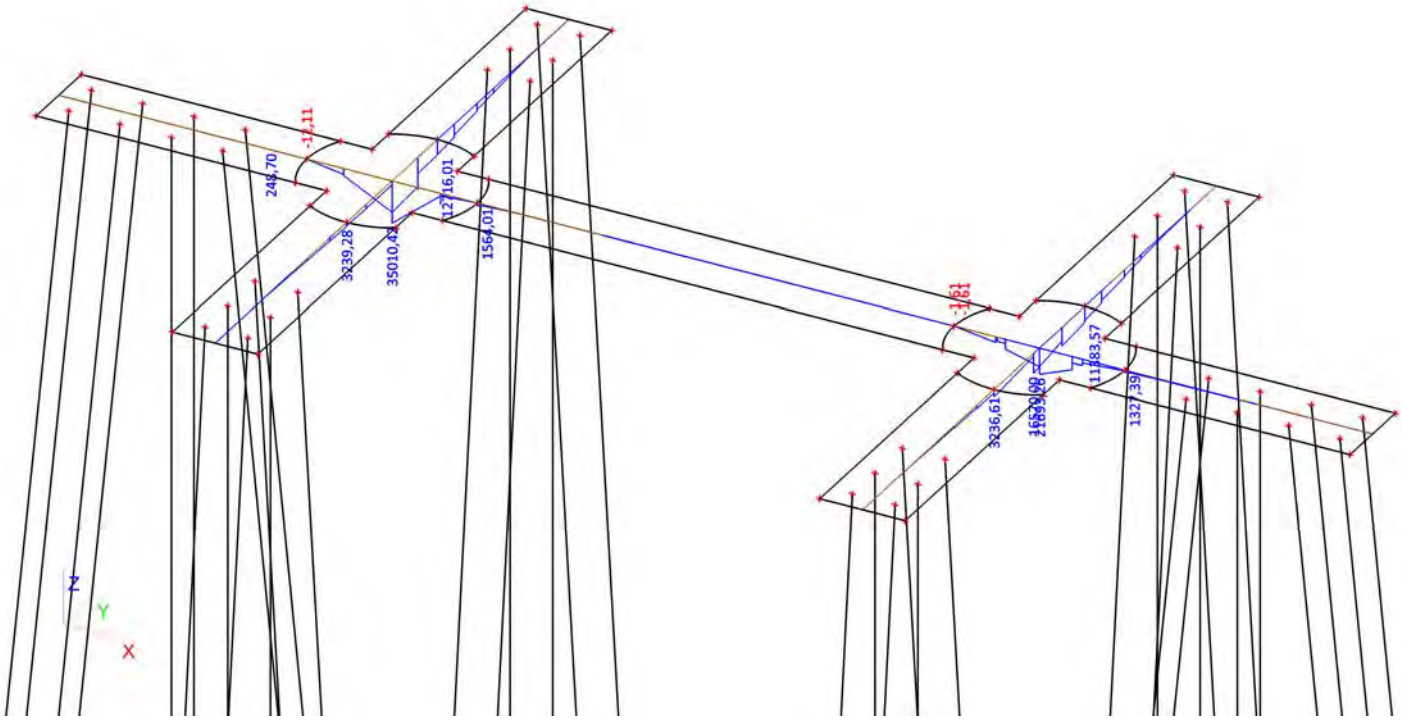

20. 2D element - Interne krachten; vx

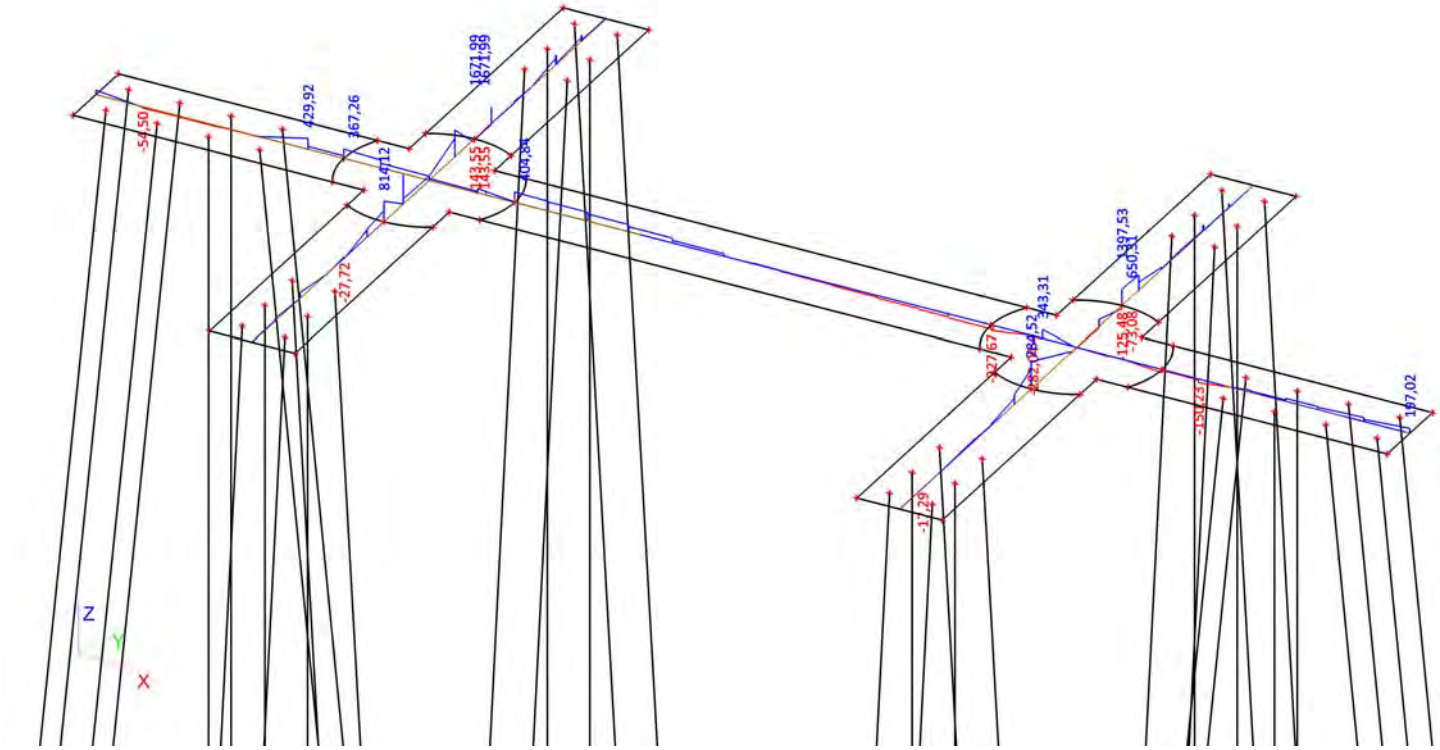

21. 2D element - Interne krachten; vy

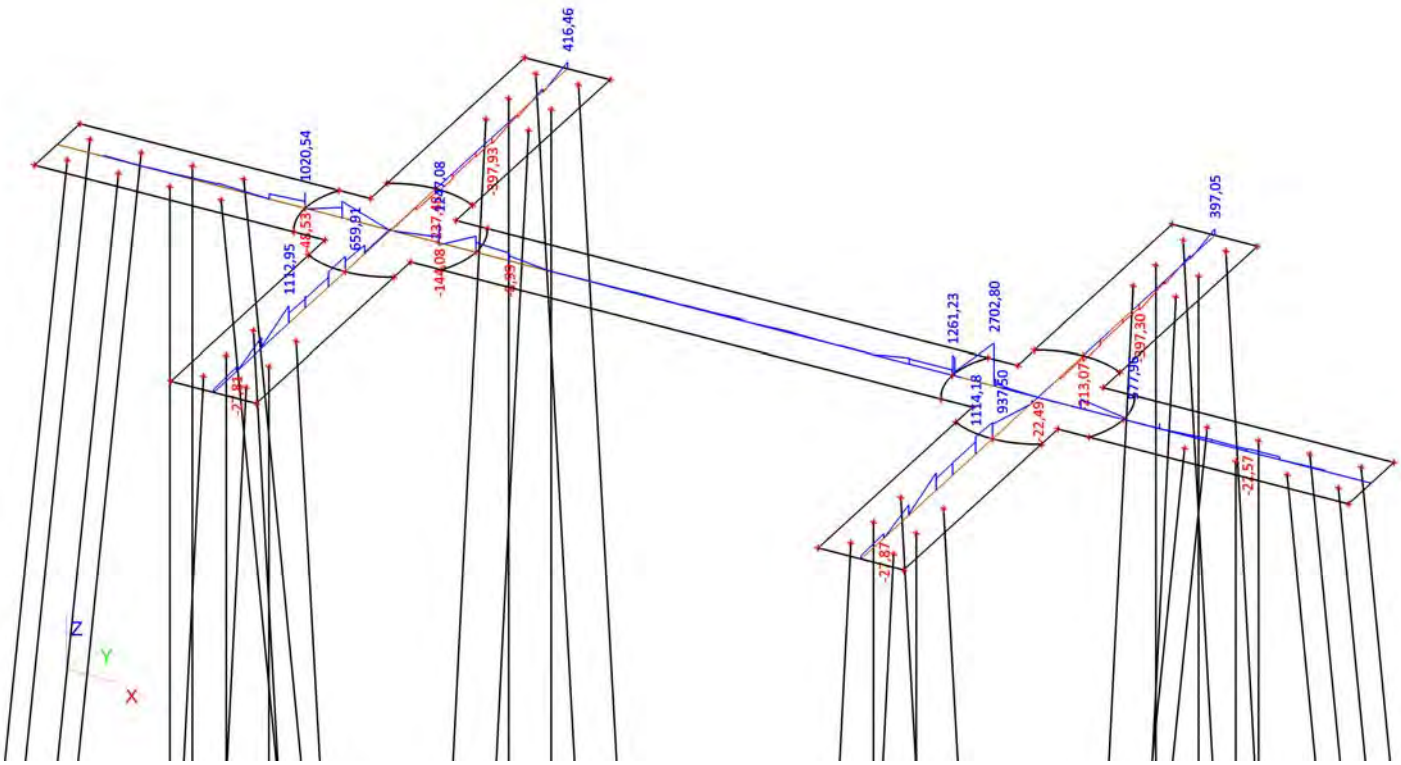

BIJLAGE 2 UITVOER SCIA ENGINEER – MATIGE E-WAARDE

1. Inhoudsopgave

1. Inhoudsopgave	1
2. Overzicht	2
3. Materialen	2
4. Doorsneden	2
5. Knoop	3
6. 1D-staaf	3
7. 2D-element	4
8. Subregio	4
9. Knoopondersteuningen	4
10. Lijnondersteuning op staaf	5
11. Belastingsgevallen	11
11.1. Belastingsgevallen - BG1	11
11.1.1. Belasting grafisch	11
11.2. Belastingsgevallen - BG2	11
11.2.1. Vrije oppervlakte last	11
11.2.2. Genereer vrije lasten	12
11.2.3. Belasting grafisch	12
11.3. Belastingsgevallen - BG3	12
11.3.1. Vrije puntmomenten	12
11.3.2. Genereer vrije lasten	13
11.3.3. Belasting grafisch	13
11.4. Belastingsgevallen - BG4	13
11.4.1. Vrije puntmomenten	14
11.4.2. Genereer vrije lasten	14
11.4.3. Belasting grafisch	15
11.5. Belastingsgevallen - BG5	15
11.5.1. Vrije puntmomenten	15
11.5.2. Genereer vrije lasten	15
11.5.3. Belasting grafisch	16
11.6. Belastingsgevallen - BG6	16
11.6.1. Vrije puntmomenten	16
11.6.2. Genereer vrije lasten	17
11.6.3. Belasting grafisch	17
11.7. Belastingsgevallen - BG7	17
11.7.1. Lasten op oppervlak	17
11.7.2. Belasting grafisch	18
12. Combinaties	18
13. Verplaatsing van knopen SLS 1	19
14. Verplaatsing van knopen SLS 2	19
15. Reacties	19
16. 2D element - Interne krachten; mxD+	20
17. 2D element - Interne krachten; mxD-	20
18. 2D element - Interne krachten; myD+	21
19. 2D element - Interne krachten; myD-	21
20. 2D element - Interne krachten; vx	22
21. 2D element - Interne krachten; vy	22

2. Overzicht

3. Materialen

Naam	Type	Massa eenheid [kg/m³]	E-mod [MPa]	Poisson - nu	G-mod [MPa]	Thermisch uitz. [m/mK]	Karakteristieke cylinderdruksterkte fck(28) [MPa]
C30/37	Beton	2500,0	2,2000e+04	0,2	9,1667e+03	0,00	30,00
C35/45	Beton	2500,0	3,4100e+04	0,2	1,4208e+04	0,00	35,00

4. Doorsneden

Naam	CS1	
Type	Rechthoek	
Uitgebreid	450; 450	
Onderdeelmateriaal	C35/45	
Bouwwijze	Algemeen	
Knik y-y, z-z	b	b
EEM berekening	×	

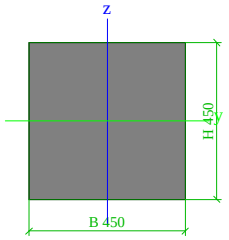

A [m²]	2,0250e-01	
A y, z [m²]	1,6875e-01	1,6875e-01
I y, z [m⁴]	3,4172e-03	3,4172e-03
I w [m⁶], t [m⁴]	0,0000e+00	5,7655e-03
Wel y, z [m³]	1,5188e-02	1,5188e-02
Wpl y, z [m³]	2,2781e-02	2,2781e-02
d y, z [mm]	0	0
c YLCS, ZLCS [mm]	225	225
alpha [deg]	0,00	
AL [m²/m]	1,8000e+00	

5. Knoop

Naam	Coördinaat X [m]	Coördinaat Y [m]	Coördinaat Z [m]
K1	0,000	0,000	0,000
K2	0,000	2,000	0,000
K3	6,800	2,000	0,000
K4	6,800	8,800	0,000
K5	8,800	8,800	0,000
K6	8,800	2,000	0,000
K7	21,950	2,000	0,000
K8	21,950	8,800	0,000
K9	23,950	8,800	0,000
K10	23,950	2,000	0,000
K11	30,750	2,000	0,000
K12	30,750	0,000	0,000
K13	23,950	0,000	0,000
K14	23,950	-6,800	0,000
K15	21,950	-6,800	0,000
K16	21,950	0,000	0,000
K17	8,800	0,000	0,000
K18	8,800	-6,800	0,000
K19	6,800	-6,800	0,000
K20	6,800	0,000	0,000
K21	5,800	1,000	0,000
K23	20,950	1,000	0,000
K25	6,800	-0,732	0,000
K26	8,800	-0,732	0,000
K27	7,800	-1,000	0,000
K28	9,516	0,000	0,000
K29	9,532	2,000	0,000
K30	9,800	1,000	0,000
K31	8,800	2,732	0,000
K32	6,800	2,732	0,000
K33	7,800	3,000	0,000
K34	6,065	2,000	0,000
K35	6,068	0,000	0,000
K36	21,950	-0,732	0,000
K37	23,950	-0,732	0,000
K38	22,950	-1,000	0,000
K39	24,682	0,000	0,000
K40	24,682	2,000	0,000
K41	24,950	1,000	0,000
K42	23,950	2,732	0,000
K43	21,950	2,732	0,000
K44	22,950	3,000	0,000

Naam	Coördinaat X [m]	Coördinaat Y [m]	Coördinaat Z [m]
K45	21,257	2,000	0,000
K46	21,218	0,000	0,000
K47	0,500	0,500	0,000
K48	-1,700	0,500	-22,000
K49	1,700	0,500	0,000
K50	-0,500	0,500	-22,000
K51	2,900	0,500	0,000
K52	2,900	0,500	-22,000
K53	4,100	0,500	0,000
K54	6,300	0,500	-22,000
K55	-1,700	1,500	-22,000
K56	-0,500	1,500	-22,000
K57	2,900	1,500	-22,000
K58	6,300	1,500	-22,000
K59	0,500	1,500	0,000
K60	1,700	1,500	0,000
K61	2,900	1,500	0,000
K62	4,100	1,500	0,000
K63	24,450	0,500	-22,000
K64	27,850	0,500	-22,000
K65	31,250	0,500	-22,000
K66	24,450	1,500	-22,000
K67	27,850	1,500	-22,000
K68	31,250	1,500	-22,000
K69	26,650	0,500	0,000
K70	27,850	0,500	0,000
K71	29,050	0,500	0,000
K72	26,650	1,500	0,000
K73	27,850	1,500	0,000
K74	29,050	1,500	0,000
K75	32,450	0,500	-22,000
K76	32,450	1,500	-22,000
K77	30,250	0,500	0,000
K78	30,250	1,500	0,000
K81	7,300	-8,500	-22,000
K82	7,300	-5,300	-22,000
K85	7,300	-5,300	0,000
K86	7,300	-6,300	0,000
K87	8,300	-8,500	-22,000
K88	8,300	-5,300	-22,000
K89	8,300	-6,300	0,000
K90	8,300	-5,300	0,000

Naam	Coördinaat X [m]	Coördinaat Y [m]	Coördinaat Z [m]
K91	7,300	-1,900	-22,000
K92	8,300	-1,900	-22,000
K93	7,300	-4,100	0,000
K94	8,300	-4,100	0,000
K95	22,475	10,500	-22,000
K96	23,475	10,500	-22,000
K97	22,475	3,900	-22,000
K98	22,475	7,100	-22,000
K99	23,475	3,900	-22,000
K100	23,475	7,100	-22,000
K101	22,475	6,100	0,000
K102	22,475	7,100	0,000
K103	23,475	6,100	0,000
K104	23,475	7,100	0,000
K105	22,475	8,300	0,000
K106	23,475	8,300	0,000
K107	22,450	-8,500	-22,000
K108	22,450	-5,300	-22,000
K109	23,450	-8,500	-22,000
K110	23,450	-5,300	-22,000
K111	22,450	-1,900	-22,000
K112	23,450	-1,900	-22,000
K113	22,450	-6,300	0,000
K114	22,450	-5,300	0,000
K115	23,450	-6,300	0,000
K116	23,450	-5,300	0,000
K117	22,450	-4,100	0,000
K118	23,450	-4,100	0,000
K131	7,325	6,100	0,000
K132	7,325	3,900	-22,000
K133	7,325	7,100	0,000
K134	7,325	7,100	-22,000
K135	8,325	6,100	0,000
K136	8,325	3,900	-22,000
K137	8,325	7,100	0,000
K138	8,325	7,100	-22,000
K139	7,325	8,300	0,000
K140	7,325	10,500	-22,000
K141	8,325	8,300	0,000
K142	8,325	10,500	-22,000

6. 1D-staaf

Naam	Doorsnede	Lengte [m]	Vorm	Beginknoop	Eindknoop	Type	EEM-type	Laag
S1	CS1 - Rechthoek (450; 450)	22,110	Lijn	K47	K48	Algemeen (0)	standaard	Laag1
S2	CS1 - Rechthoek (450; 450)	22,110	Lijn	K49	K50	Algemeen (0)	standaard	Laag1
S3	CS1 - Rechthoek (450; 450)	22,000	Lijn	K51	K52	Algemeen (0)	standaard	Laag1
S4	CS1 - Rechthoek (450; 450)	22,110	Lijn	K53	K54	Algemeen (0)	standaard	Laag1
S5	CS1 - Rechthoek (450; 450)	22,110	Lijn	K59	K55	Algemeen (0)	standaard	Laag1
S6	CS1 - Rechthoek (450; 450)	22,110	Lijn	K60	K56	Algemeen (0)	standaard	Laag1
S7	CS1 - Rechthoek (450; 450)	22,000	Lijn	K61	K57	Algemeen (0)	standaard	Laag1
S8	CS1 - Rechthoek (450; 450)	22,110	Lijn	K62	K58	Algemeen (0)	standaard	Laag1
S9	CS1 - Rechthoek (450; 450)	22,110	Lijn	K69	K63	Algemeen (0)	standaard	Laag1
S10	CS1 - Rechthoek (450; 450)	22,000	Lijn	K70	K64	Algemeen (0)	standaard	Laag1
S11	CS1 - Rechthoek (450; 450)	22,110	Lijn	K71	K65	Algemeen (0)	standaard	Laag1
S12	CS1 - Rechthoek (450; 450)	22,110	Lijn	K72	K66	Algemeen (0)	standaard	Laag1
S13	CS1 - Rechthoek (450; 450)	22,000	Lijn	K73	K67	Algemeen (0)	standaard	Laag1
S14	CS1 - Rechthoek (450; 450)	22,110	Lijn	K74	K68	Algemeen (0)	standaard	Laag1
S15	CS1 - Rechthoek (450; 450)	22,110	Lijn	K77	K75	Algemeen (0)	standaard	Laag1
S16	CS1 - Rechthoek (450; 450)	22,110	Lijn	K78	K76	Algemeen (0)	standaard	Laag1
S19	CS1 - Rechthoek (450; 450)	22,110	Lijn	K86	K81	Algemeen (0)	standaard	Laag1
S20	CS1 - Rechthoek (450; 450)	22,000	Lijn	K85	K82	Algemeen (0)	standaard	Laag1
S21	CS1 - Rechthoek (450; 450)	22,110	Lijn	K89	K87	Algemeen (0)	standaard	Laag1
S22	CS1 - Rechthoek (450; 450)	22,000	Lijn	K90	K88	Algemeen (0)	standaard	Laag1
S23	CS1 - Rechthoek (450; 450)	22,110	Lijn	K93	K91	Algemeen (0)	standaard	Laag1
S24	CS1 - Rechthoek (450; 450)	22,110	Lijn	K94	K92	Algemeen (0)	standaard	Laag1
S25	CS1 - Rechthoek (450; 450)	22,110	Lijn	K101	K97	Algemeen (0)	standaard	Laag1
S26	CS1 - Rechthoek (450; 450)	22,000	Lijn	K102	K98	Algemeen (0)	standaard	Laag1

Naam	Doorsnede	Lengte [m]	Vorm	Beginknoop	Eindknoop	Type	EEM-type	Laag
S27	CS1 - Rechthoek (450; 450)	22,110	Lijn	K103	K99	Algemeen (0)	standaard	Laag1
S28	CS1 - Rechthoek (450; 450)	22,000	Lijn	K104	K100	Algemeen (0)	standaard	Laag1
S29	CS1 - Rechthoek (450; 450)	22,110	Lijn	K105	K95	Algemeen (0)	standaard	Laag1
S30	CS1 - Rechthoek (450; 450)	22,110	Lijn	K106	K96	Algemeen (0)	standaard	Laag1
S31	CS1 - Rechthoek (450; 450)	22,110	Lijn	K113	K107	Algemeen (0)	standaard	Laag1
S32	CS1 - Rechthoek (450; 450)	22,000	Lijn	K114	K108	Algemeen (0)	standaard	Laag1
S33	CS1 - Rechthoek (450; 450)	22,110	Lijn	K115	K109	Algemeen (0)	standaard	Laag1
S34	CS1 - Rechthoek (450; 450)	22,000	Lijn	K116	K110	Algemeen (0)	standaard	Laag1
S35	CS1 - Rechthoek (450; 450)	22,110	Lijn	K117	K111	Algemeen (0)	standaard	Laag1
S36	CS1 - Rechthoek (450; 450)	22,110	Lijn	K118	K112	Algemeen (0)	standaard	Laag1
S43	CS1 - Rechthoek (450; 450)	22,110	Lijn	K131	K132	Algemeen (0)	standaard	Laag1
S44	CS1 - Rechthoek (450; 450)	22,000	Lijn	K133	K134	Algemeen (0)	standaard	Laag1
S45	CS1 - Rechthoek (450; 450)	22,110	Lijn	K135	K136	Algemeen (0)	standaard	Laag1
S46	CS1 - Rechthoek (450; 450)	22,000	Lijn	K137	K138	Algemeen (0)	standaard	Laag1
S47	CS1 - Rechthoek (450; 450)	22,110	Lijn	K139	K140	Algemeen (0)	standaard	Laag1
S48	CS1 - Rechthoek (450; 450)	22,110	Lijn	K141	K142	Algemeen (0)	standaard	Laag1

7. 2D-element

Naam	Materiaal	D. [mm]	Dikte type	Type	Laag
E1	C30/37	1500	konstant	vloer (90)	Laag1

8. Subregio

Naam, 2D-element, Materiaal, Dikte type	Regio1	E1	C30/37	konstant		
2D-element systeemvlak op, Exc. z [mm], D. [mm], Punt 4, Knoop, Rand, Gewicht	Midden	900		3300	K20	Lijn
					K25	Cirkelboog
					K27	
					K26	Lijn
					K17	Lijn
					K28	Cirkelboog
					K30	
					K29	Lijn
					K6	Lijn
					K31	Cirkelboog
					K33	
					K32	Lijn
					K3	Lijn
					K34	Cirkelboog
					K21	
					K35	Lijn

Naam, 2D-element, Materiaal, Dikte type	Regio2	E1	C30/37	konstant		
2D-element systeemvlak op, Exc. z [mm], D. [mm], Punt 4, Knoop, Rand, Gewicht	Midden	900		3300	K16	Lijn
					K36	Cirkelboog
					K38	
					K37	Lijn
					K13	Lijn
					K39	Cirkelboog
					K41	
					K40	Lijn
					K10	Lijn
					K42	Cirkelboog
					K44	
					K43	Lijn
					K7	Lijn
					K45	Cirkelboog
					K23	
					K46	Lijn

9. Knoopondersteuningen

Naam	Knoop	Systeem	Type	X	Y	Z	Stijfheid Z [MN/m]	Rx	Ry	Rz
Sn1	K48	GCS	Standaard	Vrij	Vrij	Verend	9,0000e+01	Vrij	Vrij	Vrij
Sn2	K50	GCS	Standaard	Vrij	Vrij	Verend	9,0000e+01	Vrij	Vrij	Vrij
Sn3	K52	GCS	Standaard	Vrij	Vrij	Verend	9,0000e+01	Vrij	Vrij	Vrij
Sn4	K54	GCS	Standaard	Vrij	Vrij	Verend	9,0000e+01	Vrij	Vrij	Vrij
Sn5	K55	GCS	Standaard	Vrij	Vrij	Verend	9,0000e+01	Vrij	Vrij	Vrij

Naam	Knoop	Systeem	Type	X	Y	Z	Stijfheid Z [MN/m]	Rx	Ry	Rz
Sn6	K56	GCS	Standaard	Vrij	Vrij	Verend	9,0000e+01	Vrij	Vrij	Vrij
Sn7	K57	GCS	Standaard	Vrij	Vrij	Verend	9,0000e+01	Vrij	Vrij	Vrij
Sn8	K58	GCS	Standaard	Vrij	Vrij	Verend	9,0000e+01	Vrij	Vrij	Vrij
Sn9	K81	GCS	Standaard	Vrij	Vrij	Verend	9,0000e+01	Vrij	Vrij	Vrij
Sn10	K82	GCS	Standaard	Vrij	Vrij	Verend	9,0000e+01	Vrij	Vrij	Vrij
Sn11	K87	GCS	Standaard	Vrij	Vrij	Verend	9,0000e+01	Vrij	Vrij	Vrij
Sn12	K88	GCS	Standaard	Vrij	Vrij	Verend	9,0000e+01	Vrij	Vrij	Vrij
Sn13	K91	GCS	Standaard	Vrij	Vrij	Verend	9,0000e+01	Vrij	Vrij	Vrij
Sn14	K92	GCS	Standaard	Vrij	Vrij	Verend	9,0000e+01	Vrij	Vrij	Vrij
Sn15	K132	GCS	Standaard	Vrij	Vrij	Verend	9,0000e+01	Vrij	Vrij	Vrij
Sn16	K134	GCS	Standaard	Vrij	Vrij	Verend	9,0000e+01	Vrij	Vrij	Vrij
Sn17	K136	GCS	Standaard	Vrij	Vrij	Verend	9,0000e+01	Vrij	Vrij	Vrij
Sn18	K138	GCS	Standaard	Vrij	Vrij	Verend	9,0000e+01	Vrij	Vrij	Vrij
Sn19	K140	GCS	Standaard	Vrij	Vrij	Verend	9,0000e+01	Vrij	Vrij	Vrij
Sn20	K142	GCS	Standaard	Vrij	Vrij	Verend	9,0000e+01	Vrij	Vrij	Vrij
Sn21	K63	GCS	Standaard	Vrij	Vrij	Verend	9,0000e+01	Vrij	Vrij	Vrij
Sn22	K64	GCS	Standaard	Vrij	Vrij	Verend	9,0000e+01	Vrij	Vrij	Vrij
Sn23	K65	GCS	Standaard	Vrij	Vrij	Verend	9,0000e+01	Vrij	Vrij	Vrij
Sn24	K66	GCS	Standaard	Vrij	Vrij	Verend	9,0000e+01	Vrij	Vrij	Vrij
Sn25	K67	GCS	Standaard	Vrij	Vrij	Verend	9,0000e+01	Vrij	Vrij	Vrij
Sn26	K68	GCS	Standaard	Vrij	Vrij	Verend	9,0000e+01	Vrij	Vrij	Vrij
Sn27	K75	GCS	Standaard	Vrij	Vrij	Verend	9,0000e+01	Vrij	Vrij	Vrij
Sn28	K76	GCS	Standaard	Vrij	Vrij	Verend	9,0000e+01	Vrij	Vrij	Vrij
Sn29	K95	GCS	Standaard	Vrij	Vrij	Verend	9,0000e+01	Vrij	Vrij	Vrij
Sn30	K96	GCS	Standaard	Vrij	Vrij	Verend	9,0000e+01	Vrij	Vrij	Vrij
Sn31	K97	GCS	Standaard	Vrij	Vrij	Verend	9,0000e+01	Vrij	Vrij	Vrij
Sn32	K98	GCS	Standaard	Vrij	Vrij	Verend	9,0000e+01	Vrij	Vrij	Vrij
Sn33	K99	GCS	Standaard	Vrij	Vrij	Verend	9,0000e+01	Vrij	Vrij	Vrij
Sn34	K100	GCS	Standaard	Vrij	Vrij	Verend	9,0000e+01	Vrij	Vrij	Vrij
Sn35	K107	GCS	Standaard	Vrij	Vrij	Verend	9,0000e+01	Vrij	Vrij	Vrij
Sn36	K108	GCS	Standaard	Vrij	Vrij	Verend	9,0000e+01	Vrij	Vrij	Vrij
Sn37	K109	GCS	Standaard	Vrij	Vrij	Verend	9,0000e+01	Vrij	Vrij	Vrij
Sn38	K110	GCS	Standaard	Vrij	Vrij	Verend	9,0000e+01	Vrij	Vrij	Vrij
Sn39	K111	GCS	Standaard	Vrij	Vrij	Verend	9,0000e+01	Vrij	Vrij	Vrij
Sn40	K112	GCS	Standaard	Vrij	Vrij	Verend	9,0000e+01	Vrij	Vrij	Vrij

10. Lijnondersteuning op staaf

Staaf	Naam Systeem	Pos x_1 [m] Pos x_2 [m]	Coör Oors	X	Y	Stijfheid Y [MN/m²]	Z	Stijfheid Z [MN/m²]	Rx	Ry	Rz
S1	Slb121 LCS	10,900 12,900	Abso Vanaf begin	Vrij	Verend	7,2000e+00	Verend	7,2000e+00	Vrij	Vrij	Vrij
S1	Slb81 LCS	6,400 10,900	Abso Vanaf begin	Vrij	Verend	1,2000e+00	Verend	1,2000e+00	Vrij	Vrij	Vrij
S1	Slb41 LCS	0,900 6,400	Abso Vanaf begin	Vrij	Verend	6,0000e+00	Verend	6,0000e+00	Vrij	Vrij	Vrij
S1	Slb161 LCS	12,900 22,000	Abso Vanaf begin	Vrij	Verend	1,4400e+01	Verend	1,4400e+01	Vrij	Vrij	Vrij
S1	Slb1 LCS	0,000 0,900	Abso Vanaf begin	Vrij	Verend	1,2000e+00	Verend	1,2000e+00	Vrij	Vrij	Vrij
S2	Slb82 LCS	6,400 10,900	Abso Vanaf begin	Vrij	Verend	1,2000e+00	Verend	1,2000e+00	Vrij	Vrij	Vrij
S2	Slb162 LCS	12,900 22,000	Abso Vanaf begin	Vrij	Verend	1,4400e+01	Verend	1,4400e+01	Vrij	Vrij	Vrij
S2	Slb2 LCS	0,000 0,900	Abso Vanaf begin	Vrij	Verend	1,2000e+00	Verend	1,2000e+00	Vrij	Vrij	Vrij
S2	Slb122 LCS	10,900 12,900	Abso Vanaf begin	Vrij	Verend	7,2000e+00	Verend	7,2000e+00	Vrij	Vrij	Vrij
S2	Slb42 LCS	0,900 6,400	Abso Vanaf begin	Vrij	Verend	6,0000e+00	Verend	6,0000e+00	Vrij	Vrij	Vrij
S3	Slb83 LCS	6,400 10,900	Abso Vanaf begin	Vrij	Verend	1,2000e+00	Verend	1,2000e+00	Vrij	Vrij	Vrij
S3	Slb123 LCS	10,900 12,900	Abso Vanaf begin	Vrij	Verend	7,2000e+00	Verend	7,2000e+00	Vrij	Vrij	Vrij
S3	Slb163 LCS	12,900 22,000	Abso Vanaf begin	Vrij	Verend	1,4400e+01	Verend	1,4400e+01	Vrij	Vrij	Vrij
S3	Slb3 LCS	0,000 0,900	Abso Vanaf begin	Vrij	Verend	1,2000e+00	Verend	1,2000e+00	Vrij	Vrij	Vrij
S3	Slb43 LCS	0,900 6,400	Abso Vanaf begin	Vrij	Verend	6,0000e+00	Verend	6,0000e+00	Vrij	Vrij	Vrij

Staaf	Naam Systeem	Pos x_1 [m] Pos x_2 [m]	Coör Oors	X	Y	Stijfheid Y [MN/m²]	Z	Stijfheid Z [MN/m²]	Rx	Ry	Rz
S4	Slb124 LCS	10,900 12,900	Abso Vanaf begin	Vrij	Verend	7,2000e+00	Verend	7,2000e+00	Vrij	Vrij	Vrij
S4	Slb4 LCS	0,000 0,900	Abso Vanaf begin	Vrij	Verend	1,2000e+00	Verend	1,2000e+00	Vrij	Vrij	Vrij
S4	Slb84 LCS	6,400 10,900	Abso Vanaf begin	Vrij	Verend	1,2000e+00	Verend	1,2000e+00	Vrij	Vrij	Vrij
S4	Slb164 LCS	12,900 22,000	Abso Vanaf begin	Vrij	Verend	1,4400e+01	Verend	1,4400e+01	Vrij	Vrij	Vrij
S4	Slb44 LCS	0,900 6,400	Abso Vanaf begin	Vrij	Verend	6,0000e+00	Verend	6,0000e+00	Vrij	Vrij	Vrij
S5	Slb45 LCS	0,900 6,400	Abso Vanaf begin	Vrij	Verend	6,0000e+00	Verend	6,0000e+00	Vrij	Vrij	Vrij
S5	Slb165 LCS	12,900 22,000	Abso Vanaf begin	Vrij	Verend	1,4400e+01	Verend	1,4400e+01	Vrij	Vrij	Vrij
S5	Slb85 LCS	6,400 10,900	Abso Vanaf begin	Vrij	Verend	1,2000e+00	Verend	1,2000e+00	Vrij	Vrij	Vrij
S5	Slb125 LCS	10,900 12,900	Abso Vanaf begin	Vrij	Verend	7,2000e+00	Verend	7,2000e+00	Vrij	Vrij	Vrij
S5	Slb5 LCS	0,000 0,900	Abso Vanaf begin	Vrij	Verend	1,2000e+00	Verend	1,2000e+00	Vrij	Vrij	Vrij
S6	Slb46 LCS	0,900 6,400	Abso Vanaf begin	Vrij	Verend	6,0000e+00	Verend	6,0000e+00	Vrij	Vrij	Vrij
S6	Slb86 LCS	6,400 10,900	Abso Vanaf begin	Vrij	Verend	1,2000e+00	Verend	1,2000e+00	Vrij	Vrij	Vrij
S6	Slb126 LCS	10,900 12,900	Abso Vanaf begin	Vrij	Verend	7,2000e+00	Verend	7,2000e+00	Vrij	Vrij	Vrij
S6	Slb6 LCS	0,000 0,900	Abso Vanaf begin	Vrij	Verend	1,2000e+00	Verend	1,2000e+00	Vrij	Vrij	Vrij
S6	Slb166 LCS	12,900 22,000	Abso Vanaf begin	Vrij	Verend	1,4400e+01	Verend	1,4400e+01	Vrij	Vrij	Vrij
S7	Slb7 LCS	0,000 0,900	Abso Vanaf begin	Vrij	Verend	1,2000e+00	Verend	1,2000e+00	Vrij	Vrij	Vrij
S7	Slb87 LCS	6,400 10,900	Abso Vanaf begin	Vrij	Verend	1,2000e+00	Verend	1,2000e+00	Vrij	Vrij	Vrij
S7	Slb167 LCS	12,900 22,000	Abso Vanaf begin	Vrij	Verend	1,4400e+01	Verend	1,4400e+01	Vrij	Vrij	Vrij
S7	Slb47 LCS	0,900 6,400	Abso Vanaf begin	Vrij	Verend	6,0000e+00	Verend	6,0000e+00	Vrij	Vrij	Vrij
S7	Slb127 LCS	10,900 12,900	Abso Vanaf begin	Vrij	Verend	7,2000e+00	Verend	7,2000e+00	Vrij	Vrij	Vrij
S8	Slb8 LCS	0,000 0,900	Abso Vanaf begin	Vrij	Verend	1,2000e+00	Verend	1,2000e+00	Vrij	Vrij	Vrij
S8	Slb128 LCS	10,900 12,900	Abso Vanaf begin	Vrij	Verend	7,2000e+00	Verend	7,2000e+00	Vrij	Vrij	Vrij
S8	Slb88 LCS	6,400 10,900	Abso Vanaf begin	Vrij	Verend	1,2000e+00	Verend	1,2000e+00	Vrij	Vrij	Vrij
S8	Slb48 LCS	0,900 6,400	Abso Vanaf begin	Vrij	Verend	6,0000e+00	Verend	6,0000e+00	Vrij	Vrij	Vrij
S8	Slb168 LCS	12,900 22,000	Abso Vanaf begin	Vrij	Verend	1,4400e+01	Verend	1,4400e+01	Vrij	Vrij	Vrij
S9	Slb129 LCS	10,900 12,900	Abso Vanaf begin	Vrij	Verend	7,2000e+00	Verend	7,2000e+00	Vrij	Vrij	Vrij
S9	Slb89 LCS	6,400 10,900	Abso Vanaf begin	Vrij	Verend	1,2000e+00	Verend	1,2000e+00	Vrij	Vrij	Vrij
S9	Slb49 LCS	0,900 6,400	Abso Vanaf begin	Vrij	Verend	6,0000e+00	Verend	6,0000e+00	Vrij	Vrij	Vrij
S9	Slb9 LCS	0,000 0,900	Abso Vanaf begin	Vrij	Verend	1,2000e+00	Verend	1,2000e+00	Vrij	Vrij	Vrij
S9	Slb169 LCS	12,900 22,000	Abso Vanaf begin	Vrij	Verend	1,4400e+01	Verend	1,4400e+01	Vrij	Vrij	Vrij
S10	Slb10 LCS	0,000 0,900	Abso Vanaf begin	Vrij	Verend	1,2000e+00	Verend	1,2000e+00	Vrij	Vrij	Vrij
S10	Slb50 LCS	0,900 6,400	Abso Vanaf begin	Vrij	Verend	6,0000e+00	Verend	6,0000e+00	Vrij	Vrij	Vrij
S10	Slb90 LCS	6,400 10,900	Abso Vanaf begin	Vrij	Verend	1,2000e+00	Verend	1,2000e+00	Vrij	Vrij	Vrij
S10	Slb170 LCS	12,900 22,000	Abso Vanaf begin	Vrij	Verend	1,4400e+01	Verend	1,4400e+01	Vrij	Vrij	Vrij
S10	Slb130 LCS	10,900 12,900	Abso Vanaf begin	Vrij	Verend	7,2000e+00	Verend	7,2000e+00	Vrij	Vrij	Vrij
S11	Slb91 LCS	6,400 10,900	Abso Vanaf begin	Vrij	Verend	1,2000e+00	Verend	1,2000e+00	Vrij	Vrij	Vrij

Staaf	Naam Systeem	Pos x_1 [m] Pos x_2 [m]	Coör Oors	X	Y	Stijfheid Y [MN/m²]	Z	Stijfheid Z [MN/m²]	Rx	Ry	Rz
S11	Slb131 LCS	10,900 12,900	Abso Vanaf begin	Vrij	Verend	7,2000e+00	Verend	7,2000e+00	Vrij	Vrij	Vrij
S11	Slb11 LCS	0,000 0,900	Abso Vanaf begin	Vrij	Verend	1,2000e+00	Verend	1,2000e+00	Vrij	Vrij	Vrij
S11	Slb51 LCS	0,900 6,400	Abso Vanaf begin	Vrij	Verend	6,0000e+00	Verend	6,0000e+00	Vrij	Vrij	Vrij
S11	Slb171 LCS	12,900 22,000	Abso Vanaf begin	Vrij	Verend	1,4400e+01	Verend	1,4400e+01	Vrij	Vrij	Vrij
S12	Slb172 LCS	12,900 22,000	Abso Vanaf begin	Vrij	Verend	1,4400e+01	Verend	1,4400e+01	Vrij	Vrij	Vrij
S12	Slb132 LCS	10,900 12,900	Abso Vanaf begin	Vrij	Verend	7,2000e+00	Verend	7,2000e+00	Vrij	Vrij	Vrij
S12	Slb12 LCS	0,000 0,900	Abso Vanaf begin	Vrij	Verend	1,2000e+00	Verend	1,2000e+00	Vrij	Vrij	Vrij
S12	Slb52 LCS	0,900 6,400	Abso Vanaf begin	Vrij	Verend	6,0000e+00	Verend	6,0000e+00	Vrij	Vrij	Vrij
S12	Slb92 LCS	6,400 10,900	Abso Vanaf begin	Vrij	Verend	1,2000e+00	Verend	1,2000e+00	Vrij	Vrij	Vrij
S13	Slb13 LCS	0,000 0,900	Abso Vanaf begin	Vrij	Verend	1,2000e+00	Verend	1,2000e+00	Vrij	Vrij	Vrij
S13	Slb133 LCS	10,900 12,900	Abso Vanaf begin	Vrij	Verend	7,2000e+00	Verend	7,2000e+00	Vrij	Vrij	Vrij
S13	Slb93 LCS	6,400 10,900	Abso Vanaf begin	Vrij	Verend	1,2000e+00	Verend	1,2000e+00	Vrij	Vrij	Vrij
S13	Slb53 LCS	0,900 6,400	Abso Vanaf begin	Vrij	Verend	6,0000e+00	Verend	6,0000e+00	Vrij	Vrij	Vrij
S13	Slb173 LCS	12,900 22,000	Abso Vanaf begin	Vrij	Verend	1,4400e+01	Verend	1,4400e+01	Vrij	Vrij	Vrij
S14	Slb174 LCS	12,900 22,000	Abso Vanaf begin	Vrij	Verend	1,4400e+01	Verend	1,4400e+01	Vrij	Vrij	Vrij
S14	Slb14 LCS	0,000 0,900	Abso Vanaf begin	Vrij	Verend	1,2000e+00	Verend	1,2000e+00	Vrij	Vrij	Vrij
S14	Slb54 LCS	0,900 6,400	Abso Vanaf begin	Vrij	Verend	6,0000e+00	Verend	6,0000e+00	Vrij	Vrij	Vrij
S14	Slb134 LCS	10,900 12,900	Abso Vanaf begin	Vrij	Verend	7,2000e+00	Verend	7,2000e+00	Vrij	Vrij	Vrij
S14	Slb94 LCS	6,400 10,900	Abso Vanaf begin	Vrij	Verend	1,2000e+00	Verend	1,2000e+00	Vrij	Vrij	Vrij
S15	Slb15 LCS	0,000 0,900	Abso Vanaf begin	Vrij	Verend	1,2000e+00	Verend	1,2000e+00	Vrij	Vrij	Vrij
S15	Slb95 LCS	6,400 10,900	Abso Vanaf begin	Vrij	Verend	1,2000e+00	Verend	1,2000e+00	Vrij	Vrij	Vrij
S15	Slb175 LCS	12,900 22,000	Abso Vanaf begin	Vrij	Verend	1,4400e+01	Verend	1,4400e+01	Vrij	Vrij	Vrij
S15	Slb135 LCS	10,900 12,900	Abso Vanaf begin	Vrij	Verend	7,2000e+00	Verend	7,2000e+00	Vrij	Vrij	Vrij
S15	Slb55 LCS	0,900 6,400	Abso Vanaf begin	Vrij	Verend	6,0000e+00	Verend	6,0000e+00	Vrij	Vrij	Vrij
S16	Slb56 LCS	0,900 6,400	Abso Vanaf begin	Vrij	Verend	6,0000e+00	Verend	6,0000e+00	Vrij	Vrij	Vrij
S16	Slb16 LCS	0,000 0,900	Abso Vanaf begin	Vrij	Verend	1,2000e+00	Verend	1,2000e+00	Vrij	Vrij	Vrij
S16	Slb176 LCS	12,900 22,000	Abso Vanaf begin	Vrij	Verend	1,4400e+01	Verend	1,4400e+01	Vrij	Vrij	Vrij
S16	Slb136 LCS	10,900 12,900	Abso Vanaf begin	Vrij	Verend	7,2000e+00	Verend	7,2000e+00	Vrij	Vrij	Vrij
S16	Slb96 LCS	6,400 10,900	Abso Vanaf begin	Vrij	Verend	1,2000e+00	Verend	1,2000e+00	Vrij	Vrij	Vrij
S19	Slb137 LCS	10,900 12,900	Abso Vanaf begin	Vrij	Verend	7,2000e+00	Verend	7,2000e+00	Vrij	Vrij	Vrij
S19	Slb97 LCS	6,400 10,900	Abso Vanaf begin	Vrij	Verend	1,2000e+00	Verend	1,2000e+00	Vrij	Vrij	Vrij
S19	Slb177 LCS	12,900 22,000	Abso Vanaf begin	Vrij	Verend	1,4400e+01	Verend	1,4400e+01	Vrij	Vrij	Vrij
S19	Slb57 LCS	0,900 6,400	Abso Vanaf begin	Vrij	Verend	6,0000e+00	Verend	6,0000e+00	Vrij	Vrij	Vrij
S19	Slb17 LCS	0,000 0,900	Abso Vanaf begin	Vrij	Verend	1,2000e+00	Verend	1,2000e+00	Vrij	Vrij	Vrij
S20	Slb58 LCS	0,900 6,400	Abso Vanaf begin	Vrij	Verend	6,0000e+00	Verend	6,0000e+00	Vrij	Vrij	Vrij
S20	Slb98 LCS	6,400 10,900	Abso Vanaf begin	Vrij	Verend	1,2000e+00	Verend	1,2000e+00	Vrij	Vrij	Vrij

Staaf	Naam Systeem	Pos x_1 [m] Pos x_2 [m]	Coör Oors	X	Y	Stijfheid Y [MN/m²]	Z	Stijfheid Z [MN/m²]	Rx	Ry	Rz
S20	Slb18 LCS	0,000 0,900	Abso Vanaf begin	Vrij	Verend	1,2000e+00	Verend	1,2000e+00	Vrij	Vrij	Vrij
S20	Slb138 LCS	10,900 12,900	Abso Vanaf begin	Vrij	Verend	7,2000e+00	Verend	7,2000e+00	Vrij	Vrij	Vrij
S20	Slb178 LCS	12,900 22,000	Abso Vanaf begin	Vrij	Verend	1,4400e+01	Verend	1,4400e+01	Vrij	Vrij	Vrij
S21	Slb19 LCS	0,000 0,900	Abso Vanaf begin	Vrij	Verend	1,2000e+00	Verend	1,2000e+00	Vrij	Vrij	Vrij
S21	Slb179 LCS	12,900 22,000	Abso Vanaf begin	Vrij	Verend	1,4400e+01	Verend	1,4400e+01	Vrij	Vrij	Vrij
S21	Slb139 LCS	10,900 12,900	Abso Vanaf begin	Vrij	Verend	7,2000e+00	Verend	7,2000e+00	Vrij	Vrij	Vrij
S21	Slb59 LCS	0,900 6,400	Abso Vanaf begin	Vrij	Verend	6,0000e+00	Verend	6,0000e+00	Vrij	Vrij	Vrij
S21	Slb99 LCS	6,400 10,900	Abso Vanaf begin	Vrij	Verend	1,2000e+00	Verend	1,2000e+00	Vrij	Vrij	Vrij
S22	Slb180 LCS	12,900 22,000	Abso Vanaf begin	Vrij	Verend	1,4400e+01	Verend	1,4400e+01	Vrij	Vrij	Vrij
S22	Slb100 LCS	6,400 10,900	Abso Vanaf begin	Vrij	Verend	1,2000e+00	Verend	1,2000e+00	Vrij	Vrij	Vrij
S22	Slb140 LCS	10,900 12,900	Abso Vanaf begin	Vrij	Verend	7,2000e+00	Verend	7,2000e+00	Vrij	Vrij	Vrij
S22	Slb60 LCS	0,900 6,400	Abso Vanaf begin	Vrij	Verend	6,0000e+00	Verend	6,0000e+00	Vrij	Vrij	Vrij
S22	Slb20 LCS	0,000 0,900	Abso Vanaf begin	Vrij	Verend	1,2000e+00	Verend	1,2000e+00	Vrij	Vrij	Vrij
S23	Slb141 LCS	10,900 12,900	Abso Vanaf begin	Vrij	Verend	7,2000e+00	Verend	7,2000e+00	Vrij	Vrij	Vrij
S23	Slb181 LCS	12,900 22,000	Abso Vanaf begin	Vrij	Verend	1,4400e+01	Verend	1,4400e+01	Vrij	Vrij	Vrij
S23	Slb61 LCS	0,900 6,400	Abso Vanaf begin	Vrij	Verend	6,0000e+00	Verend	6,0000e+00	Vrij	Vrij	Vrij
S23	Slb21 LCS	0,000 0,900	Abso Vanaf begin	Vrij	Verend	1,2000e+00	Verend	1,2000e+00	Vrij	Vrij	Vrij
S23	Slb101 LCS	6,400 10,900	Abso Vanaf begin	Vrij	Verend	1,2000e+00	Verend	1,2000e+00	Vrij	Vrij	Vrij
S24	Slb62 LCS	0,900 6,400	Abso Vanaf begin	Vrij	Verend	6,0000e+00	Verend	6,0000e+00	Vrij	Vrij	Vrij
S24	Slb182 LCS	12,900 22,000	Abso Vanaf begin	Vrij	Verend	1,4400e+01	Verend	1,4400e+01	Vrij	Vrij	Vrij
S24	Slb142 LCS	10,900 12,900	Abso Vanaf begin	Vrij	Verend	7,2000e+00	Verend	7,2000e+00	Vrij	Vrij	Vrij
S24	Slb22 LCS	0,000 0,900	Abso Vanaf begin	Vrij	Verend	1,2000e+00	Verend	1,2000e+00	Vrij	Vrij	Vrij
S24	Slb102 LCS	6,400 10,900	Abso Vanaf begin	Vrij	Verend	1,2000e+00	Verend	1,2000e+00	Vrij	Vrij	Vrij
S25	Slb183 LCS	12,900 22,000	Abso Vanaf begin	Vrij	Verend	1,4400e+01	Verend	1,4400e+01	Vrij	Vrij	Vrij
S25	Slb23 LCS	0,000 0,900	Abso Vanaf begin	Vrij	Verend	1,2000e+00	Verend	1,2000e+00	Vrij	Vrij	Vrij
S25	Slb63 LCS	0,900 6,400	Abso Vanaf begin	Vrij	Verend	6,0000e+00	Verend	6,0000e+00	Vrij	Vrij	Vrij
S25	Slb103 LCS	6,400 10,900	Abso Vanaf begin	Vrij	Verend	1,2000e+00	Verend	1,2000e+00	Vrij	Vrij	Vrij
S25	Slb143 LCS	10,900 12,900	Abso Vanaf begin	Vrij	Verend	7,2000e+00	Verend	7,2000e+00	Vrij	Vrij	Vrij
S26	Slb24 LCS	0,000 0,900	Abso Vanaf begin	Vrij	Verend	1,2000e+00	Verend	1,2000e+00	Vrij	Vrij	Vrij
S26	Slb104 LCS	6,400 10,900	Abso Vanaf begin	Vrij	Verend	1,2000e+00	Verend	1,2000e+00	Vrij	Vrij	Vrij
S26	Slb184 LCS	12,900 22,000	Abso Vanaf begin	Vrij	Verend	1,4400e+01	Verend	1,4400e+01	Vrij	Vrij	Vrij
S26	Slb64 LCS	0,900 6,400	Abso Vanaf begin	Vrij	Verend	6,0000e+00	Verend	6,0000e+00	Vrij	Vrij	Vrij
S26	Slb144 LCS	10,900 12,900	Abso Vanaf begin	Vrij	Verend	7,2000e+00	Verend	7,2000e+00	Vrij	Vrij	Vrij
S27	Slb145 LCS	10,900 12,900	Abso Vanaf begin	Vrij	Verend	7,2000e+00	Verend	7,2000e+00	Vrij	Vrij	Vrij
S27	Slb65 LCS	0,900 6,400	Abso Vanaf begin	Vrij	Verend	6,0000e+00	Verend	6,0000e+00	Vrij	Vrij	Vrij
S27	Slb185 LCS	12,900 22,000	Abso Vanaf begin	Vrij	Verend	1,4400e+01	Verend	1,4400e+01	Vrij	Vrij	Vrij

Staaf	Naam Systeem	Pos x_1 [m] Pos x_2 [m]	Coör Oors	X	Y	Stijfheid Y [MN/m²]	Z	Stijfheid Z [MN/m²]	Rx	Ry	Rz
S27	Slb25 LCS	0,000 0,900	Abso Vanaf begin	Vrij	Verend	1,2000e+00	Verend	1,2000e+00	Vrij	Vrij	Vrij
S27	Slb105 LCS	6,400 10,900	Abso Vanaf begin	Vrij	Verend	1,2000e+00	Verend	1,2000e+00	Vrij	Vrij	Vrij
S28	Slb66 LCS	0,900 6,400	Abso Vanaf begin	Vrij	Verend	6,0000e+00	Verend	6,0000e+00	Vrij	Vrij	Vrij
S28	Slb26 LCS	0,000 0,900	Abso Vanaf begin	Vrij	Verend	1,2000e+00	Verend	1,2000e+00	Vrij	Vrij	Vrij
S28	Slb106 LCS	6,400 10,900	Abso Vanaf begin	Vrij	Verend	1,2000e+00	Verend	1,2000e+00	Vrij	Vrij	Vrij
S28	Slb186 LCS	12,900 22,000	Abso Vanaf begin	Vrij	Verend	1,4400e+01	Verend	1,4400e+01	Vrij	Vrij	Vrij
S28	Slb146 LCS	10,900 12,900	Abso Vanaf begin	Vrij	Verend	7,2000e+00	Verend	7,2000e+00	Vrij	Vrij	Vrij
S29	Slb27 LCS	0,000 0,900	Abso Vanaf begin	Vrij	Verend	1,2000e+00	Verend	1,2000e+00	Vrij	Vrij	Vrij
S29	Slb187 LCS	12,900 22,000	Abso Vanaf begin	Vrij	Verend	1,4400e+01	Verend	1,4400e+01	Vrij	Vrij	Vrij
S29	Slb107 LCS	6,400 10,900	Abso Vanaf begin	Vrij	Verend	1,2000e+00	Verend	1,2000e+00	Vrij	Vrij	Vrij
S29	Slb67 LCS	0,900 6,400	Abso Vanaf begin	Vrij	Verend	6,0000e+00	Verend	6,0000e+00	Vrij	Vrij	Vrij
S29	Slb147 LCS	10,900 12,900	Abso Vanaf begin	Vrij	Verend	7,2000e+00	Verend	7,2000e+00	Vrij	Vrij	Vrij
S30	Slb68 LCS	0,900 6,400	Abso Vanaf begin	Vrij	Verend	6,0000e+00	Verend	6,0000e+00	Vrij	Vrij	Vrij
S30	Slb28 LCS	0,000 0,900	Abso Vanaf begin	Vrij	Verend	1,2000e+00	Verend	1,2000e+00	Vrij	Vrij	Vrij
S30	Slb108 LCS	6,400 10,900	Abso Vanaf begin	Vrij	Verend	1,2000e+00	Verend	1,2000e+00	Vrij	Vrij	Vrij
S30	Slb188 LCS	12,900 22,000	Abso Vanaf begin	Vrij	Verend	1,4400e+01	Verend	1,4400e+01	Vrij	Vrij	Vrij
S30	Slb148 LCS	10,900 12,900	Abso Vanaf begin	Vrij	Verend	7,2000e+00	Verend	7,2000e+00	Vrij	Vrij	Vrij
S31	Slb189 LCS	12,900 22,000	Abso Vanaf begin	Vrij	Verend	1,4400e+01	Verend	1,4400e+01	Vrij	Vrij	Vrij
S31	Slb149 LCS	10,900 12,900	Abso Vanaf begin	Vrij	Verend	7,2000e+00	Verend	7,2000e+00	Vrij	Vrij	Vrij
S31	Slb29 LCS	0,000 0,900	Abso Vanaf begin	Vrij	Verend	1,2000e+00	Verend	1,2000e+00	Vrij	Vrij	Vrij
S31	Slb109 LCS	6,400 10,900	Abso Vanaf begin	Vrij	Verend	1,2000e+00	Verend	1,2000e+00	Vrij	Vrij	Vrij
S31	Slb69 LCS	0,900 6,400	Abso Vanaf begin	Vrij	Verend	6,0000e+00	Verend	6,0000e+00	Vrij	Vrij	Vrij
S32	Slb110 LCS	6,400 10,900	Abso Vanaf begin	Vrij	Verend	1,2000e+00	Verend	1,2000e+00	Vrij	Vrij	Vrij
S32	Slb150 LCS	10,900 12,900	Abso Vanaf begin	Vrij	Verend	7,2000e+00	Verend	7,2000e+00	Vrij	Vrij	Vrij
S32	Slb190 LCS	12,900 22,000	Abso Vanaf begin	Vrij	Verend	1,4400e+01	Verend	1,4400e+01	Vrij	Vrij	Vrij
S32	Slb70 LCS	0,900 6,400	Abso Vanaf begin	Vrij	Verend	6,0000e+00	Verend	6,0000e+00	Vrij	Vrij	Vrij
S32	Slb30 LCS	0,000 0,900	Abso Vanaf begin	Vrij	Verend	1,2000e+00	Verend	1,2000e+00	Vrij	Vrij	Vrij
S33	Slb191 LCS	12,900 22,000	Abso Vanaf begin	Vrij	Verend	1,4400e+01	Verend	1,4400e+01	Vrij	Vrij	Vrij
S33	Slb31 LCS	0,000 0,900	Abso Vanaf begin	Vrij	Verend	1,2000e+00	Verend	1,2000e+00	Vrij	Vrij	Vrij
S33	Slb111 LCS	6,400 10,900	Abso Vanaf begin	Vrij	Verend	1,2000e+00	Verend	1,2000e+00	Vrij	Vrij	Vrij
S33	Slb151 LCS	10,900 12,900	Abso Vanaf begin	Vrij	Verend	7,2000e+00	Verend	7,2000e+00	Vrij	Vrij	Vrij
S33	Slb71 LCS	0,900 6,400	Abso Vanaf begin	Vrij	Verend	6,0000e+00	Verend	6,0000e+00	Vrij	Vrij	Vrij
S34	Slb72 LCS	0,900 6,400	Abso Vanaf begin	Vrij	Verend	6,0000e+00	Verend	6,0000e+00	Vrij	Vrij	Vrij
S34	Slb32 LCS	0,000 0,900	Abso Vanaf begin	Vrij	Verend	1,2000e+00	Verend	1,2000e+00	Vrij	Vrij	Vrij
S34	Slb112 LCS	6,400 10,900	Abso Vanaf begin	Vrij	Verend	1,2000e+00	Verend	1,2000e+00	Vrij	Vrij	Vrij
S34	Slb152 LCS	10,900 12,900	Abso Vanaf begin	Vrij	Verend	7,2000e+00	Verend	7,2000e+00	Vrij	Vrij	Vrij

Staaf	Naam Systeem	Pos x_1 [m] Pos x_2 [m]	Coör Oors	X	Y	Stijfheid Y [MN/m²]	Z	Stijfheid Z [MN/m²]	Rx	Ry	Rz
S34	Slb192 LCS	12,900 22,000	Abso Vanaf begin	Vrij	Verend	1,4400e+01	Verend	1,4400e+01	Vrij	Vrij	Vrij
S35	Slb113 LCS	6,400 10,900	Abso Vanaf begin	Vrij	Verend	1,2000e+00	Verend	1,2000e+00	Vrij	Vrij	Vrij
S35	Slb33 LCS	0,000 0,900	Abso Vanaf begin	Vrij	Verend	1,2000e+00	Verend	1,2000e+00	Vrij	Vrij	Vrij
S35	Slb193 LCS	12,900 22,000	Abso Vanaf begin	Vrij	Verend	1,4400e+01	Verend	1,4400e+01	Vrij	Vrij	Vrij
S35	Slb153 LCS	10,900 12,900	Abso Vanaf begin	Vrij	Verend	7,2000e+00	Verend	7,2000e+00	Vrij	Vrij	Vrij
S35	Slb73 LCS	0,900 6,400	Abso Vanaf begin	Vrij	Verend	6,0000e+00	Verend	6,0000e+00	Vrij	Vrij	Vrij
S36	Slb154 LCS	10,900 12,900	Abso Vanaf begin	Vrij	Verend	7,2000e+00	Verend	7,2000e+00	Vrij	Vrij	Vrij
S36	Slb74 LCS	0,900 6,400	Abso Vanaf begin	Vrij	Verend	6,0000e+00	Verend	6,0000e+00	Vrij	Vrij	Vrij
S36	Slb194 LCS	12,900 22,000	Abso Vanaf begin	Vrij	Verend	1,4400e+01	Verend	1,4400e+01	Vrij	Vrij	Vrij
S36	Slb114 LCS	6,400 10,900	Abso Vanaf begin	Vrij	Verend	1,2000e+00	Verend	1,2000e+00	Vrij	Vrij	Vrij
S36	Slb34 LCS	0,000 0,900	Abso Vanaf begin	Vrij	Verend	1,2000e+00	Verend	1,2000e+00	Vrij	Vrij	Vrij
S43	Slb115 LCS	6,400 10,900	Abso Vanaf begin	Vrij	Verend	1,2000e+00	Verend	1,2000e+00	Vrij	Vrij	Vrij
S43	Slb195 LCS	12,900 22,000	Abso Vanaf begin	Vrij	Verend	1,4400e+01	Verend	1,4400e+01	Vrij	Vrij	Vrij
S43	Slb75 LCS	0,900 6,400	Abso Vanaf begin	Vrij	Verend	6,0000e+00	Verend	6,0000e+00	Vrij	Vrij	Vrij
S43	Slb35 LCS	0,000 0,900	Abso Vanaf begin	Vrij	Verend	1,2000e+00	Verend	1,2000e+00	Vrij	Vrij	Vrij
S43	Slb155 LCS	10,900 12,900	Abso Vanaf begin	Vrij	Verend	7,2000e+00	Verend	7,2000e+00	Vrij	Vrij	Vrij
S44	Slb196 LCS	12,900 22,000	Abso Vanaf begin	Vrij	Verend	1,4400e+01	Verend	1,4400e+01	Vrij	Vrij	Vrij
S44	Slb36 LCS	0,000 0,900	Abso Vanaf begin	Vrij	Verend	1,2000e+00	Verend	1,2000e+00	Vrij	Vrij	Vrij
S44	Slb156 LCS	10,900 12,900	Abso Vanaf begin	Vrij	Verend	7,2000e+00	Verend	7,2000e+00	Vrij	Vrij	Vrij
S44	Slb76 LCS	0,900 6,400	Abso Vanaf begin	Vrij	Verend	6,0000e+00	Verend	6,0000e+00	Vrij	Vrij	Vrij
S44	Slb116 LCS	6,400 10,900	Abso Vanaf begin	Vrij	Verend	1,2000e+00	Verend	1,2000e+00	Vrij	Vrij	Vrij
S45	Slb37 LCS	0,000 0,900	Abso Vanaf begin	Vrij	Verend	1,2000e+00	Verend	1,2000e+00	Vrij	Vrij	Vrij
S45	Slb197 LCS	12,900 22,000	Abso Vanaf begin	Vrij	Verend	1,4400e+01	Verend	1,4400e+01	Vrij	Vrij	Vrij
S45	Slb157 LCS	10,900 12,900	Abso Vanaf begin	Vrij	Verend	7,2000e+00	Verend	7,2000e+00	Vrij	Vrij	Vrij
S45	Slb77 LCS	0,900 6,400	Abso Vanaf begin	Vrij	Verend	6,0000e+00	Verend	6,0000e+00	Vrij	Vrij	Vrij
S45	Slb117 LCS	6,400 10,900	Abso Vanaf begin	Vrij	Verend	1,2000e+00	Verend	1,2000e+00	Vrij	Vrij	Vrij
S46	Slb78 LCS	0,900 6,400	Abso Vanaf begin	Vrij	Verend	6,0000e+00	Verend	6,0000e+00	Vrij	Vrij	Vrij
S46	Slb158 LCS	10,900 12,900	Abso Vanaf begin	Vrij	Verend	7,2000e+00	Verend	7,2000e+00	Vrij	Vrij	Vrij
S46	Slb198 LCS	12,900 22,000	Abso Vanaf begin	Vrij	Verend	1,4400e+01	Verend	1,4400e+01	Vrij	Vrij	Vrij
S46	Slb38 LCS	0,000 0,900	Abso Vanaf begin	Vrij	Verend	1,2000e+00	Verend	1,2000e+00	Vrij	Vrij	Vrij
S46	Slb118 LCS	6,400 10,900	Abso Vanaf begin	Vrij	Verend	1,2000e+00	Verend	1,2000e+00	Vrij	Vrij	Vrij
S47	Slb199 LCS	12,900 22,000	Abso Vanaf begin	Vrij	Verend	1,4400e+01	Verend	1,4400e+01	Vrij	Vrij	Vrij
S47	Slb119 LCS	6,400 10,900	Abso Vanaf begin	Vrij	Verend	1,2000e+00	Verend	1,2000e+00	Vrij	Vrij	Vrij
S47	Slb39 LCS	0,000 0,900	Abso Vanaf begin	Vrij	Verend	1,2000e+00	Verend	1,2000e+00	Vrij	Vrij	Vrij
S47	Slb79 LCS	0,900 6,400	Abso Vanaf begin	Vrij	Verend	6,0000e+00	Verend	6,0000e+00	Vrij	Vrij	Vrij
S47	Slb159 LCS	10,900 12,900	Abso Vanaf begin	Vrij	Verend	7,2000e+00	Verend	7,2000e+00	Vrij	Vrij	Vrij

Staaf	Naam Systeem	Pos x_1 [m] Pos x_2 [m]	Coör Oors	X	Y	Stijfheid Y [MN/m²]	Z	Stijfheid Z [MN/m²]	Rx	Ry	Rz
S48	Slb200 LCS	12,900 22,000	Abso Vanaf begin	Vrij	Verend	1,4400e+01	Verend	1,4400e+01	Vrij	Vrij	Vrij
S48	Slb120 LCS	6,400 10,900	Abso Vanaf begin	Vrij	Verend	1,2000e+00	Verend	1,2000e+00	Vrij	Vrij	Vrij
S48	Slb80 LCS	0,900 6,400	Abso Vanaf begin	Vrij	Verend	6,0000e+00	Verend	6,0000e+00	Vrij	Vrij	Vrij
S48	Slb40 LCS	0,000 0,900	Abso Vanaf begin	Vrij	Verend	1,2000e+00	Verend	1,2000e+00	Vrij	Vrij	Vrij
S48	Slb160 LCS	10,900 12,900	Abso Vanaf begin	Vrij	Verend	7,2000e+00	Verend	7,2000e+00	Vrij	Vrij	Vrij

11. Belastingsgevallen

11.1. Belastingsgevallen - BG1

Naam	Omschrijving	Actie type	Lastgroep	Belastingtype	Richting
BG1	Eigengewicht	Permanent	LG8	Eigen gewicht	-Z

11.1.1. Belasting grafisch

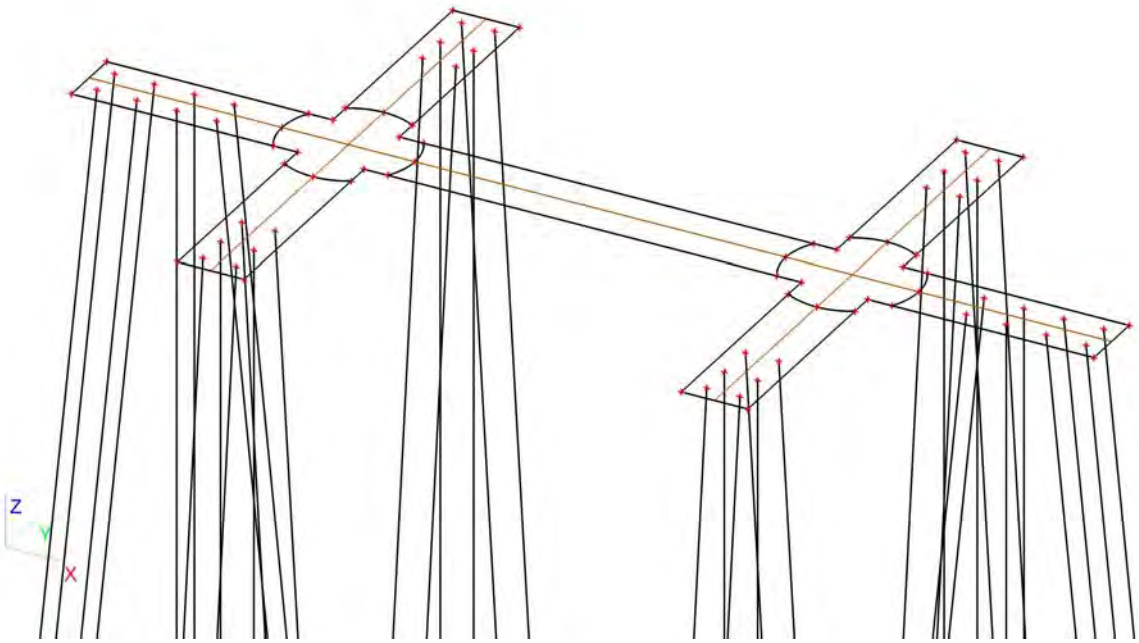

11.2. Belastingsgevallen - BG2

Naam	Omschrijving	Actie type	Lastgroep	Belastingtype
BG2	Grond	Permanent	LG1	Standaard

11.2.1. Vrije oppervlakte last

Naam	Belastingsgeval	Rich	Type	Verdeling	q [kN/m²]	Geldigheid	Selecteer	Systeem	Locatie
FF1	BG2 - Grond	Z	Kracht	Gelijkmatig	-25,50	Alle	Auto	GCS	Lengte
FF2	BG2 - Grond	Z	Kracht	Gelijkmatig	-25,50	Alle	Auto	GCS	Lengte
FF3	BG2 - Grond	Z	Kracht	Gelijkmatig	-25,50	Alle	Auto	GCS	Lengte
FF4	BG2 - Grond	Z	Kracht	Gelijkmatig	-25,50	Alle	Auto	GCS	Lengte
FF5	BG2 - Grond	Z	Kracht	Gelijkmatig	-25,50	Alle	Auto	GCS	Lengte
FF6	BG2 - Grond	Z	Kracht	Gelijkmatig	-25,50	Alle	Auto	GCS	Lengte
FF7	BG2 - Grond	Z	Kracht	Gelijkmatig	-25,50	Alle	Auto	GCS	Lengte

11.2.2. Genereer vrije lasten

Naam	Belastingsgeval	2D-element	Rich Verdeling	Belastingstype Type	Oorspronkelijke belasting	q [kN/m²]	Systeem Locatie
GFF43	BG2 - Grond	E1	Z Gelijkmatig	Oppervlak Kracht	FF1	-25,50	GCS Lengte
GFF44	BG2 - Grond	E1	Z Gelijkmatig	Oppervlak Kracht	FF2	-25,50	GCS Lengte
GFF45	BG2 - Grond	E1	Z Gelijkmatig	Oppervlak Kracht	FF3	-25,50	GCS Lengte
GFF46	BG2 - Grond	E1	Z Gelijkmatig	Oppervlak Kracht	FF4	-25,50	GCS Lengte
GFF47	BG2 - Grond	E1	Z Gelijkmatig	Oppervlak Kracht	FF5	-25,50	GCS Lengte
GFF48	BG2 - Grond	E1	Z Gelijkmatig	Oppervlak Kracht	FF6	-25,50	GCS Lengte
GFF49	BG2 - Grond	E1	Z Gelijkmatig	Oppervlak Kracht	FF7	-25,50	GCS Lengte

11.2.3. Belasting grafisch

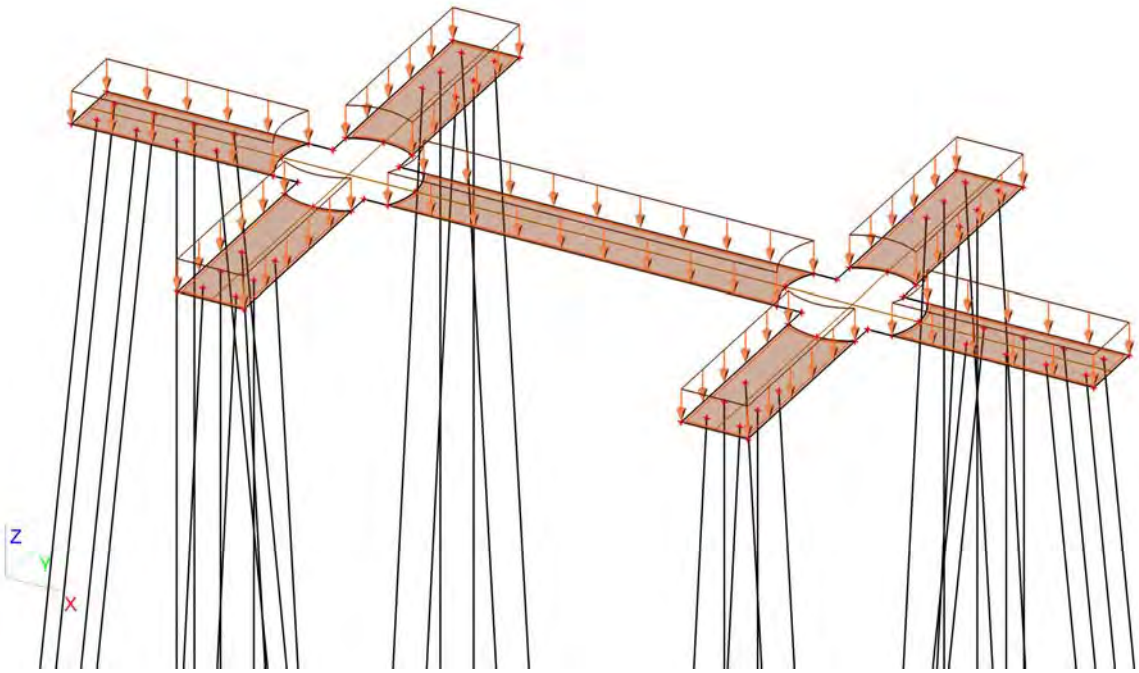

11.3. Belastingsgevallen - BG3

Naam	Omschrijving	Actie type	Lastgroep	Belastingtype	Spec	Duur	'Master' belastingsgeval
BG3	ULS 1	Variabel	LG7	Statisch	Standaard	Kort	Geen

11.3.1. Vrije puntmomenten

Typenaam	Naam	Rich	Type	Geldigheid	Selecteer	Waarde - F [kNm]	Belastingsgeval	Coördinaat X [m]	Coördinaat Y [m]	Coördinaat Z [m]	Coördinaat ux [m]	Coördinaat uy [m]	Coördinaat uz [m]	Systeem
Vrij puntmoment	FM1	Mx	Moment	Alle	Auto	-16697,00	BG3 - ULS 1	7,800	1,000	0,000	7,800	1,000	0,000	GCS
Vrij puntmoment	FM2	Mx	Moment	Alle	Auto	-16697,00	BG3 - ULS 1	22,950	1,000	0,000	7,800	1,000	0,000	GCS
Vrij puntmoment	FM3	My	Moment	Alle	Auto	31259,00	BG3 - ULS 1	7,800	1,000	0,000	7,800	1,000	0,000	GCS
Vrij puntmoment	FM4	My	Moment	Alle	Auto	31259,00	BG3 - ULS 1	22,950	1,000	0,000	22,950	1,000	0,000	GCS
Vrij puntmoment	FM5	Mx	Moment	Alle	Auto	1111,80	BG3 - ULS 1	7,800	1,000	0,000	7,800	1,000	0,000	GCS
Vrij puntmoment	FM6	Mx	Moment	Alle	Auto	1111,80	BG3 - ULS 1	22,950	1,000	0,000	22,950	1,000	0,000	GCS
Vrij puntmoment	FM7	My	Moment	Alle	Auto	2037,45	BG3 - ULS 1	7,800	1,000	0,000	6,800	1,000	0,000	GCS
Vrij puntmoment	FM8	My	Moment	Alle	Auto	2037,45	BG3 - ULS 1	22,950	1,000	0,000	21,950	1,000	0,000	GCS

11.3.2. Genereer vrije lasten

Naam	Belastingsgeval	2D-element	Rich	Belastingstype Type	Oorspronkelijke belasting	Waarde - F [kN] Waarde - F [kNm]	Systeem Locatie
GFF1	BG3 - ULS 1	E1	Z	Punt Kracht	FF1	-749,00	GCS Lengte
GFF2	BG3 - ULS 1	E1	My	Punt Moment	FM7	2037,45	GCS Lengte
GFF4	BG3 - ULS 1	E1	Z	Punt Kracht	FF2	-749,00	GCS Lengte
GFF7	BG3 - ULS 1	E1	Y	Punt Kracht	FF3	436,00	GCS Lengte
GFF8	BG3 - ULS 1	E1	Y	Punt Kracht	FF4	436,00	GCS Lengte
GFF9	BG3 - ULS 1	E1	X	Punt Kracht	FF5	799,00	GCS Lengte
GFF10	BG3 - ULS 1	E1	My	Punt Moment	FM8	2037,45	GCS Lengte
GFF11	BG3 - ULS 1	E1	X	Punt Kracht	FF6	799,00	GCS Lengte
GFF50	BG3 - ULS 1	E1	Mx	Punt Moment	FM1	-16697,00	GCS Lengte
GFF51	BG3 - ULS 1	E1	Mx	Punt Moment	FM2	-16697,00	GCS Lengte
GFF52	BG3 - ULS 1	E1	My	Punt Moment	FM3	31259,00	GCS Lengte
GFF53	BG3 - ULS 1	E1	My	Punt Moment	FM4	31259,00	GCS Lengte
GFF54	BG3 - ULS 1	E1	Mx	Punt Moment	FM5	1111,80	GCS Lengte
GFF55	BG3 - ULS 1	E1	Mx	Punt Moment	FM6	1111,80	GCS Lengte

11.3.3. Belasting grafisch

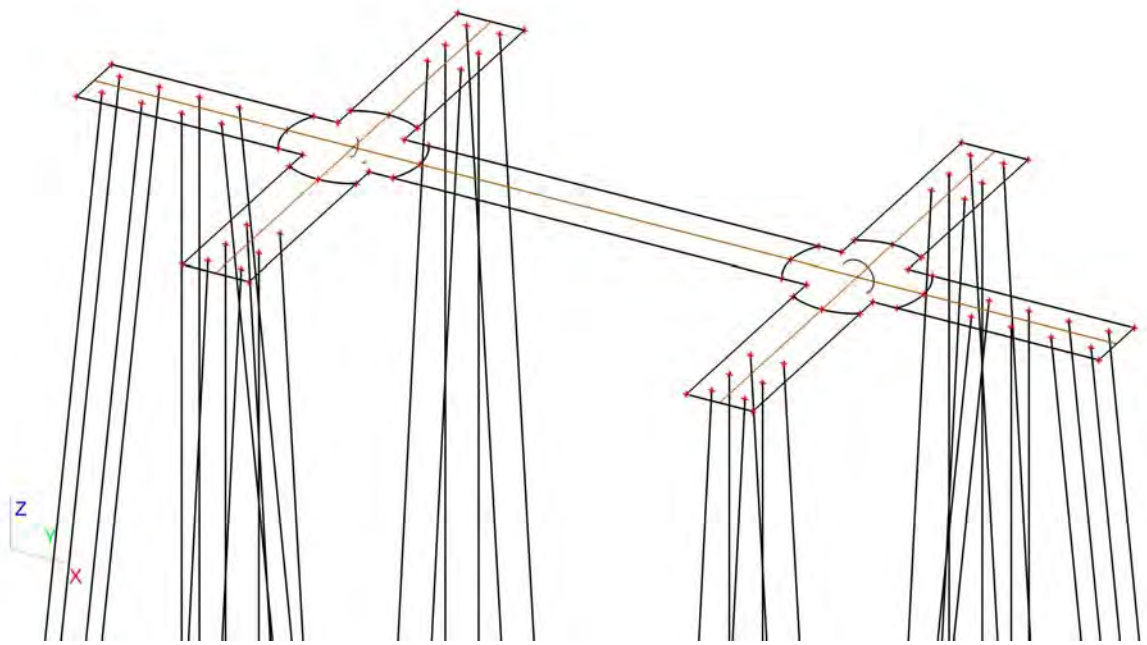

11.4. Belastingsgevallen - BG4

Naam	Omschrijving	Actie type	Lastgroep	Belastingtype	Spec	Duur	'Master' belastingsgeval
BG4	ULS 2	Variabel	LG9	Statisch	Standaard	Kort	Geen

11.4.1. Vrije puntmomenten

Typenaam	Naam	Rich	Type	Geldigheid	Selecteer	Waarde - F [kNm]	Belastingsgeval	Coördinaat X [m]	Coördinaat Y [m]	Coördinaat Z [m]	Coördinaat ux [m]	Coördinaat uy [m]	Coördinaat uz [m]	Systeem
Vrij puntmoment	FM9	Mx	Moment	Alle	Auto	-43362,00	BG4 - ULS 2	7,800	1,000	0,000	6,800	1,000	0,000	GCS
Vrij puntmoment	FM10	Mx	Moment	Alle	Auto	-43362,00	BG4 - ULS 2	22,950	1,000	0,000	21,950	1,000	0,000	GCS
Vrij puntmoment	FM11	My	Moment	Alle	Auto	18257,00	BG4 - ULS 2	7,800	1,000	0,000	6,800	1,000	0,000	GCS
Vrij puntmoment	FM12	My	Moment	Alle	Auto	18257,00	BG4 - ULS 2	22,950	1,000	0,000	21,950	1,000	0,000	GCS
Vrij puntmoment	FM13	Mx	Moment	Alle	Auto	2425,05	BG4 - ULS 2	7,800	1,000	0,000	6,800	1,000	0,000	GCS
Vrij puntmoment	FM14	Mx	Moment	Alle	Auto	2425,05	BG4 - ULS 2	22,950	1,000	0,000	21,950	1,000	0,000	GCS
Vrij puntmoment	FM15	My	Moment	Alle	Auto	1058,25	BG4 - ULS 2	7,800	1,000	0,000	6,800	1,000	0,000	GCS
Vrij puntmoment	FM16	My	Moment	Alle	Auto	1058,25	BG4 - ULS 2	22,950	1,000	0,000	21,950	1,000	0,000	GCS

11.4.2. Genereer vrije lasten

Naam	Belastingsgeval	2D-element	Rich	Belastingstype Type	Oorspronkelijke belasting	Waarde - F [kN] Waarde - F [kNm]	Systeem Locatie
GFF3	BG4 - ULS 2	E1	Z	Punt Kracht	FF8	-1190,00	GCS Lengte
GFF5	BG4 - ULS 2	E1	My	Punt Moment	FM12	18257,00	GCS Lengte
GFF6	BG4 - ULS 2	E1	Y	Punt Kracht	FF9	951,00	GCS Lengte
GFF12	BG4 - ULS 2	E1	Mx	Punt Moment	FM9	-43362,00	GCS Lengte
GFF13	BG4 - ULS 2	E1	Z	Punt Kracht	FF7	-1190,00	GCS Lengte
GFF14	BG4 - ULS 2	E1	Y	Punt Kracht	FF10	951,00	GCS Lengte
GFF15	BG4 - ULS 2	E1	X	Punt Kracht	FF11	415,00	GCS Lengte
GFF17	BG4 - ULS 2	E1	X	Punt Kracht	FF12	415,00	GCS Lengte
GFF32	BG4 - ULS 2	E1	Mx	Punt Moment	FM14	2425,05	GCS Lengte
GFF34	BG4 - ULS 2	E1	My	Punt Moment	FM15	1058,25	GCS Lengte
GFF39	BG4 - ULS 2	E1	Mx	Punt Moment	FM10	-43362,00	GCS Lengte
GFF41	BG4 - ULS 2	E1	My	Punt Moment	FM11	18257,00	GCS Lengte
GFF56	BG4 - ULS 2	E1	Mx	Punt Moment	FM13	2425,05	GCS Lengte
GFF57	BG4 - ULS 2	E1	My	Punt Moment	FM16	1058,25	GCS Lengte

11.4.3. Belasting grafisch

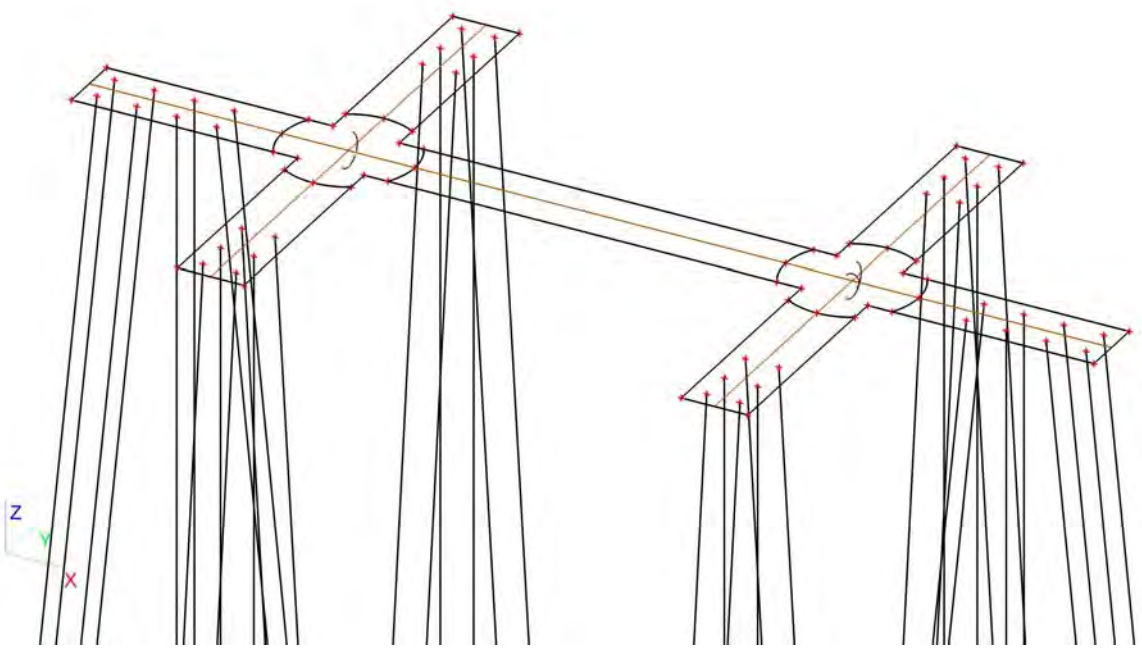

11.5. Belastingsgevallen - BG5

Naam	Omschrijving	Actie type	Lastgroep	Belastingtype	Spec	Duur	'Master' belastingsgeval
BG5	SLS 1	Variabel	LG9	Statisch	Standaard	Kort	Geen

11.5.1. Vrije puntmomenten

Typenaam	Naam	Rich	Type	Geldigheid	Selecteer	Waarde - F [kNm]	Belastingsgeval	Coördinaat X [m]	Coördinaat Y [m]	Coördinaat Z [m]	Coördinaat ux [m]	Coördinaat uy [m]	Coördinaat uz [m]	Systeem
Vrij puntmoment	FM17	Mx	Moment	Alle	Auto	-9556,00	BG5 - SLS 1	7,800	1,000	0,000	6,800	1,000	0,000	GCS
Vrij puntmoment	FM18	Mx	Moment	Alle	Auto	-9556,00	BG5 - SLS 1	22,950	1,000	0,000	6,800	1,000	0,000	GCS
Vrij puntmoment	FM19	My	Moment	Alle	Auto	27308,00	BG5 - SLS 1	7,800	1,000	0,000	6,800	1,000	0,000	GCS
Vrij puntmoment	FM20	My	Moment	Alle	Auto	27308,00	BG5 - SLS 1	22,950	1,000	0,000	21,950	1,000	0,000	GCS
Vrij puntmoment	FM21	Mx	Moment	Alle	Auto	660,45	BG5 - SLS 1	7,800	1,000	0,000	6,800	1,000	0,000	GCS
Vrij puntmoment	FM22	Mx	Moment	Alle	Auto	660,45	BG5 - SLS 1	22,950	1,000	0,000	21,950	1,000	0,000	GCS
Vrij puntmoment	FM23	My	Moment	Alle	Auto	660,45	BG5 - SLS 1	7,800	1,000	0,000	5,800	1,000	0,000	GCS
Vrij puntmoment	FM24	My	Moment	Alle	Auto	660,45	BG5 - SLS 1	22,950	1,000	0,000	20,950	1,000	0,000	GCS
Vrij puntmoment	FM29	Mx	Moment	Alle	Auto	196,35	BG5 - SLS 1	7,800	1,000	0,000	5,800	1,000	0,000	GCS
Vrij puntmoment	FM30	Mx	Moment	Alle	Auto	196,35	BG5 - SLS 1	22,950	1,000	0,000	20,950	1,000	0,000	GCS
Vrij puntmoment	FM31	My	Moment	Alle	Auto	2374,05	BG5 - SLS 1	7,800	1,000	0,000	5,800	1,000	0,000	GCS
Vrij puntmoment	FM32	My	Moment	Alle	Auto	2374,05	BG5 - SLS 1	22,950	1,000	0,000	20,950	1,000	0,000	GCS

11.5.2. Genereer vrije lasten

Naam	Belastingsgeval	2D-element	Rich	Belastingstype Type	Oorspronkelijke belasting	Waarde - F [kN] Waarde - F [kNm]	Systeem Locatie
GFF16	BG5 - SLS 1	E1	Mx	Punt Moment	FM22	660,45	GCS Lengte
GFF18	BG5 - SLS 1	E1	My	Punt Moment	FM23	660,45	GCS Lengte
GFF19	BG5 - SLS 1	E1	Z	Punt Kracht	FF13	-832,00	GCS Lengte
GFF21	BG5 - SLS 1	E1	Z	Punt Kracht	FF14	-832,00	GCS Lengte
GFF22	BG5 - SLS 1	E1	Mx	Punt Moment	FM29	196,35	GCS Lengte
GFF23	BG5 - SLS 1	E1	Y	Punt Kracht	FF15	259,00	GCS Lengte
GFF24	BG5 - SLS 1	E1	Mx	Punt Moment	FM18	-9556,00	GCS Lengte
GFF25	BG5 - SLS 1	E1	Y	Punt Kracht	FF16	259,00	GCS Lengte

Naam	Belastingsgeval	2D-element	Rich	Belastingstype Type	Oorspronkelijke belasting	Waarde - F [kN] Waarde - F [kNm]	Systeem Locatie
GFF26	BG5 - SLS 1	E1	My	Punt Moment	FM19	27308,00	GCS Lengte
GFF27	BG5 - SLS 1	E1	X	Punt Kracht	FF17	700,00	GCS Lengte
GFF28	BG5 - SLS 1	E1	My	Punt Moment	FM24	660,45	GCS Lengte
GFF29	BG5 - SLS 1	E1	X	Punt Kracht	FF18	700,00	GCS Lengte
GFF36	BG5 - SLS 1	E1	My	Punt Moment	FM20	27308,00	GCS Lengte
GFF38	BG5 - SLS 1	E1	Mx	Punt Moment	FM21	660,45	GCS Lengte
GFF58	BG5 - SLS 1	E1	Mx	Punt Moment	FM17	-9556,00	GCS Lengte
GFF61	BG5 - SLS 1	E1	Mx	Punt Moment	FM30	196,35	GCS Lengte
GFF62	BG5 - SLS 1	E1	My	Punt Moment	FM31	2374,05	GCS Lengte
GFF63	BG5 - SLS 1	E1	My	Punt Moment	FM32	2374,05	GCS Lengte

11.5.3. Belasting grafisch

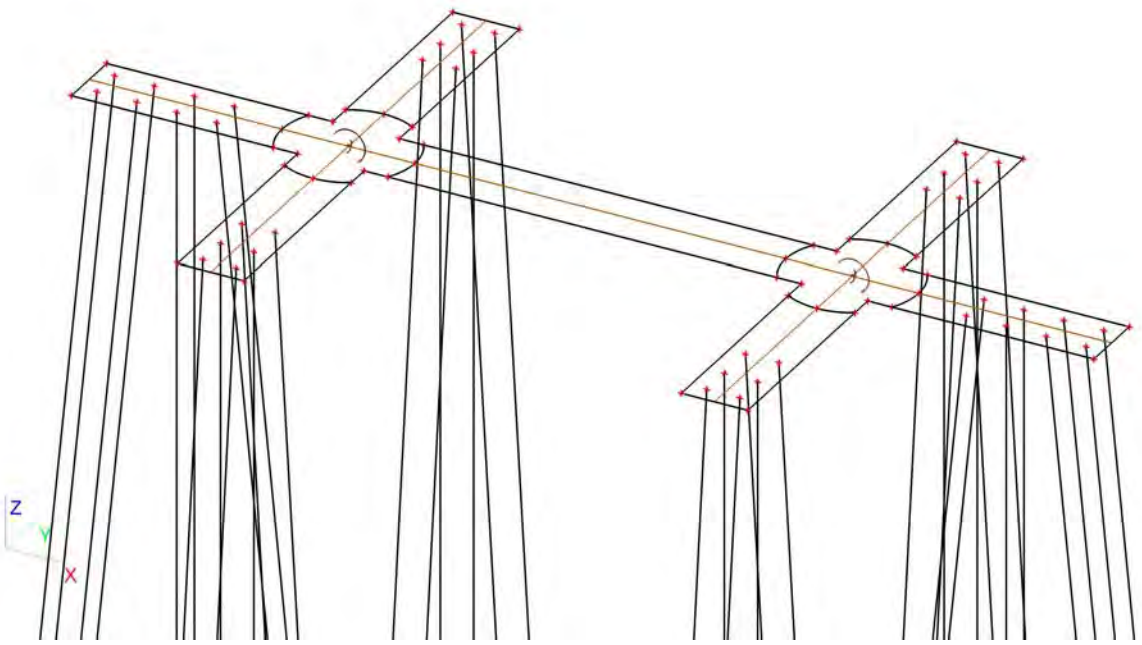

11.6. Belastingsgevallen - BG6

Naam	Omschrijving	Actie type	Lastgroep	Belastingtype	Spec	Duur	'Master' belastingsgeval
BG6	SLS 2	Variabel	LG9	Statisch	Standaard	Kort	Geen

11.6.1. Vrije puntmomenten

Typenaam	Naam	Rich	Type	Geldigheid	Selecteer	Waarde - F [kNm]	Belastingsgeval	Coördinaat X [m]	Coördinaat Y [m]	Coördinaat Z [m]	Coördinaat ux [m]	Coördinaat uy [m]	Coördinaat uz [m]	Systeem
Vrij puntmoment	FM25	Mx	Moment	Alle	Auto	-2098,00	BG6 - SLS 2	7,800	1,000	0,000	5,800	1,000	0,000	GCS
Vrij puntmoment	FM26	Mx	Moment	Alle	Auto	-2098,00	BG6 - SLS 2	22,950	1,000	0,000	20,950	1,000	0,000	GCS
Vrij puntmoment	FM27	My	Moment	Alle	Auto	36338,00	BG6 - SLS 2	7,800	1,000	0,000	5,800	1,000	0,000	GCS
Vrij puntmoment	FM28	My	Moment	Alle	Auto	36338,00	BG6 - SLS 2	22,950	1,000	0,000	20,950	1,000	0,000	GCS

11.6.2. Genereer vrije lasten

Naam	Belastingsgeval	2D-element	Rich	Belastingstype Type	Oorspronkelijke belasting	Waarde - F [kN] Waarde - F [kNm]	Systeem Locatie
GFF20	BG6 - SLS 2	E1	My	Punt Moment	FM28	36338,00	GCS Lengte
GFF30	BG6 - SLS 2	E1	Mx	Punt Moment	FM25	-2098,00	GCS Lengte
GFF31	BG6 - SLS 2	E1	Z	Punt Kracht	FF19	-922,00	GCS Lengte
GFF33	BG6 - SLS 2	E1	Z	Punt Kracht	FF20	-922,00	GCS Lengte
GFF35	BG6 - SLS 2	E1	Y	Punt Kracht	FF21	77,00	GCS Lengte
GFF37	BG6 - SLS 2	E1	Y	Punt Kracht	FF22	77,00	GCS Lengte
GFF40	BG6 - SLS 2	E1	X	Punt Kracht	FF23	931,00	GCS Lengte
GFF42	BG6 - SLS 2	E1	X	Punt Kracht	FF24	931,00	GCS Lengte
GFF59	BG6 - SLS 2	E1	Mx	Punt Moment	FM26	-2098,00	GCS Lengte
GFF60	BG6 - SLS 2	E1	My	Punt Moment	FM27	36338,00	GCS Lengte

11.6.3. Belasting grafisch

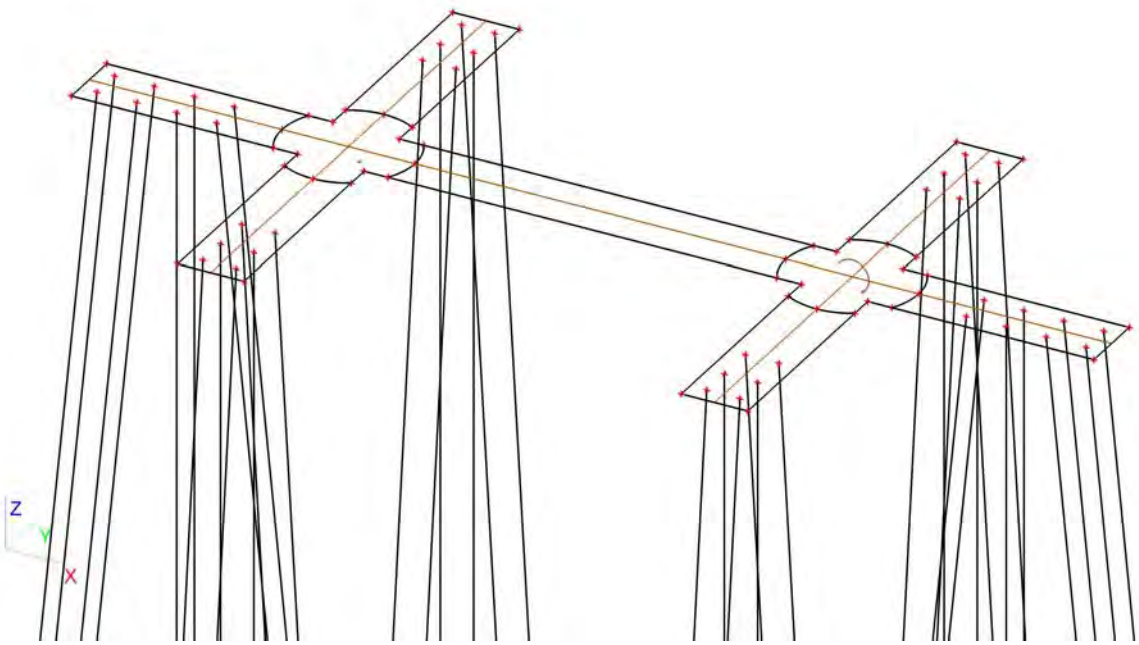

11.7. Belastingsgevallen - BG7

Naam	Omschrijving	Actie type	Lastgroep	Belastingtype	Spec	Duur	'Master' belastingsgeval
BG7	Belasting op maaiveld	Variabel	LG7	Statisch	Standaard	Kort	Geen

11.7.1. Lasten op oppervlak

Naam	Rich	Type	Waarde [kN/m²]	2D-element	Belastingsgeval	Systeem	Loc
SF1	Z	Kracht	-10,00	E1	BG7 - Belasting op maaiveld	LCS	Lengte

11.7.2. Belasting grafisch

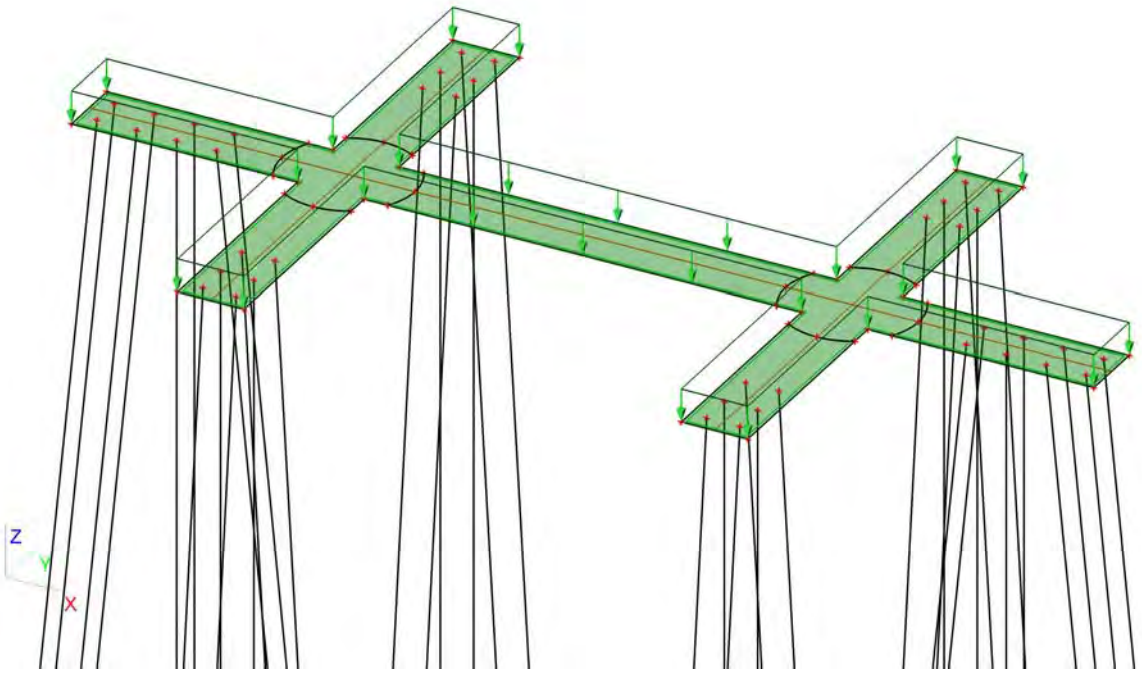

12. Combinaties

Naam	Type	Belastingsgevallen	Coëff. [-]
Combi1	Omhullende - uiterst	BG1 - Eigengewicht	1,30
		BG3 - ULS 1	1,00
		BG7 - Belasting op maaiveld	1,16
		BG2 - Grond	1,30
Combi2	Omhullende - uiterst	BG1 - Eigengewicht	1,30
		BG4 - ULS 2	1,00
		BG7 - Belasting op maaiveld	1,16
		BG2 - Grond	1,30
Combi3	Omhullende - uiterst	BG1 - Eigengewicht	1,30
		BG3 - ULS 1	0,60
		BG7 - Belasting op maaiveld	1,65
		BG2 - Grond	1,30
Combi4	Omhullende - uiterst	BG1 - Eigengewicht	1,30
		BG4 - ULS 2	0,60
		BG7 - Belasting op maaiveld	1,65
		BG2 - Grond	1,30
Combi5	Omhullende - uiterst	BG1 - Eigengewicht	0,54
		BG3 - ULS 1	1,00
		BG2 - Grond	0,54
Combi6	Omhullende - uiterst	BG1 - Eigengewicht	0,54
		BG4 - ULS 2	1,00
		BG2 - Grond	0,54
Combi7	Omhullende - bruikbaarheid	BG1 - Eigengewicht	1,00
		BG5 - SLS 1	1,00
		BG7 - Belasting op maaiveld	1,16
		BG2 - Grond	1,00
Combi8	Omhullende - bruikbaarheid	BG1 - Eigengewicht	1,00
		BG6 - SLS 2	1,00
		BG7 - Belasting op maaiveld	0,70
		BG2 - Grond	1,00
Combi9	Omhullende - bruikbaarheid	BG1 - Eigengewicht	1,00
		BG5 - SLS 1	0,60
		BG7 - Belasting op maaiveld	1,00
		BG2 - Grond	1,00
Combi10	Omhullende -	BG1 - Eigengewicht	1,00
		BG6 - SLS 2	0,60

Naam	Type	Belastingsgevallen	Coëff. [-]
Combi10	Omhullende - bruikbaarheid	BG7 - Belasting op maaiveld	1,00
		BG2 - Grond	1,00
Combi11	Omhullende - bruikbaarheid	BG1 - Eigengewicht	0,60
		BG5 - SLS 1	1,00
		BG2 - Grond	0,60
Combi12	Omhullende - bruikbaarheid	BG1 - Eigengewicht	0,60
		BG6 - SLS 2	1,00
		BG2 - Grond	0,60

13. Verplaatsing van knopen SLS 1

Lineaire berekening, Extreem : Globaal
Selectie : Alle
Belastingsgevallen : BG5

BG	Snede	elem	dx [m]	Ux [mm]	Uy [mm]	Uz [mm]	Fix [mrad]	Fiy [mrad]	Fiz [mrad]
BG5	Snede9	158	0,000	**3,7**	1,4	1,5	-0,2	1,3	-0,1
BG5	Snede3	179	0,000	**4,3**	1,4	-5,3	-0,5	1,6	0,0
BG5	Snede5	131	5,800	4,2	**1,2**	-4,6	-0,5	-0,1	0,0
BG5	Snede3	69	6,239	4,3	**1,5**	-1,4	-0,5	**-1,4**	0,0
BG5	Snede3	74	1,707	4,3	1,5	**-6,4**	-0,5	0,0	0,0
BG5	Snede1	11	0,000	4,2	1,2	**5,0**	-0,5	0,3	0,0
BG5	Snede2	173	2,000	4,0	1,3	-2,0	**-0,6**	**2,0**	0,0
BG5	Snede8	37	5,800	3,9	1,4	-2,4	**0,2**	1,6	0,1
BG5	Snede9	158	1,011	3,8	1,4	1,3	-0,2	1,3	**-0,1**
BG5	Snede8	47	3,576	4,0	1,4	-3,0	0,2	1,6	**0,1**

14. Verplaatsing van knopen SLS 2

Lineaire berekening, Extreem : Globaal
Selectie : Alle
Belastingsgevallen : BG6

BG	Snede	elem	dx [m]	Ux [mm]	Uy [mm]	Uz [mm]	Fix [mrad]	Fiy [mrad]	Fiz [mrad]
BG6	Snede9	158	0,000	**4,9**	0,4	0,1	-0,2	1,6	-0,1
BG6	Snede3	179	0,000	**5,5**	0,4	-6,2	-0,1	1,9	0,0
BG6	Snede5	131	5,800	5,4	**0,3**	-5,6	-0,1	-0,1	0,0
BG6	Snede3	69	6,239	5,5	**0,4**	-1,5	-0,1	**-1,7**	0,0
BG6	Snede3	74	1,707	5,5	0,4	**-7,5**	-0,1	0,0	0,0
BG6	Snede1	11	0,000	5,4	0,3	**6,0**	-0,1	0,4	0,0
BG6	Snede6	87	1,011	5,2	0,4	-0,6	**-0,3**	2,0	-0,1
BG6	Snede8	34	4,731	5,1	0,4	-1,4	**0,3**	2,0	0,1
BG6	Snede2	173	2,000	5,2	0,4	-2,3	-0,1	**2,3**	0,0
BG6	Snede9	158	1,011	5,0	0,4	-0,1	-0,2	1,6	**-0,1**
BG6	Snede11	107	4,731	5,1	0,4	-0,9	0,2	1,6	**0,1**

15. Reacties

Lineaire berekening, Extreem : Globaal
Selectie : Alle
Klasse : UGT

Steunpunt	BG	dx [m]	Rx [kN]	Ry [kN]	Rz [kN]	Mx [kNm]	My [kNm]	Mz [kNm]
Slb174/S14	Combi1/1	21,090	**-30,63**	0,00	-3,06	0,00	0,00	0,00
Slb172/S12	Combi1/1	21,090	**35,11**	0,00	-3,51	0,00	0,00	0,00
Slb200/S48	Combi2/2	21,090	0,02	**-53,95**	-5,39	0,00	0,00	0,00
Slb197/S45	Combi2/2	21,090	0,02	**59,20**	-5,92	0,00	0,00	0,00
Sn9/K81	Combi6/3		0,00	0,00	**-412,82**	0,00	0,00	0,00
Sn18/K138	Combi2/2		0,02	0,01	**1281,78**	0,00	0,00	0,00
Sn1/K48	Combi1/4		0,00	0,00	169,21	**0,00**	**0,00**	**0,00**

16. 2D element - Interne krachten; mxD+

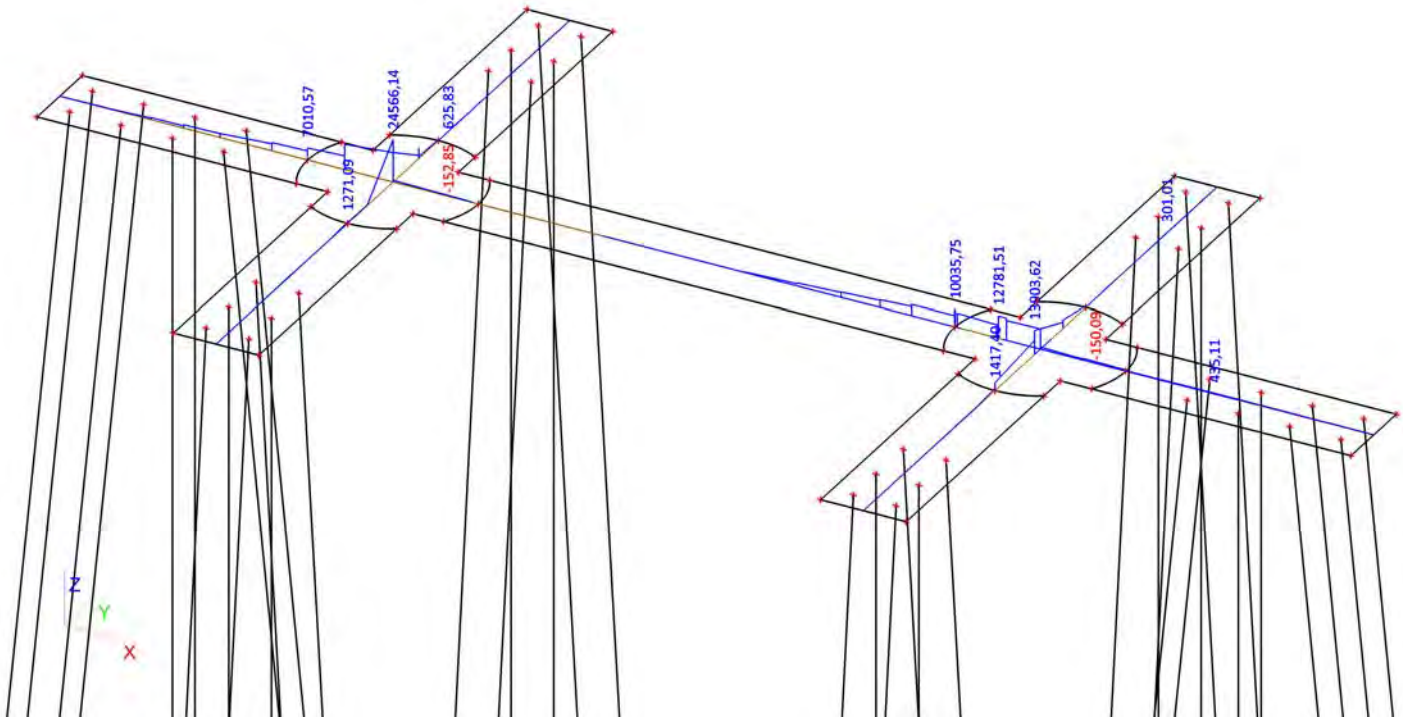

17. 2D element - Interne krachten; mxD-

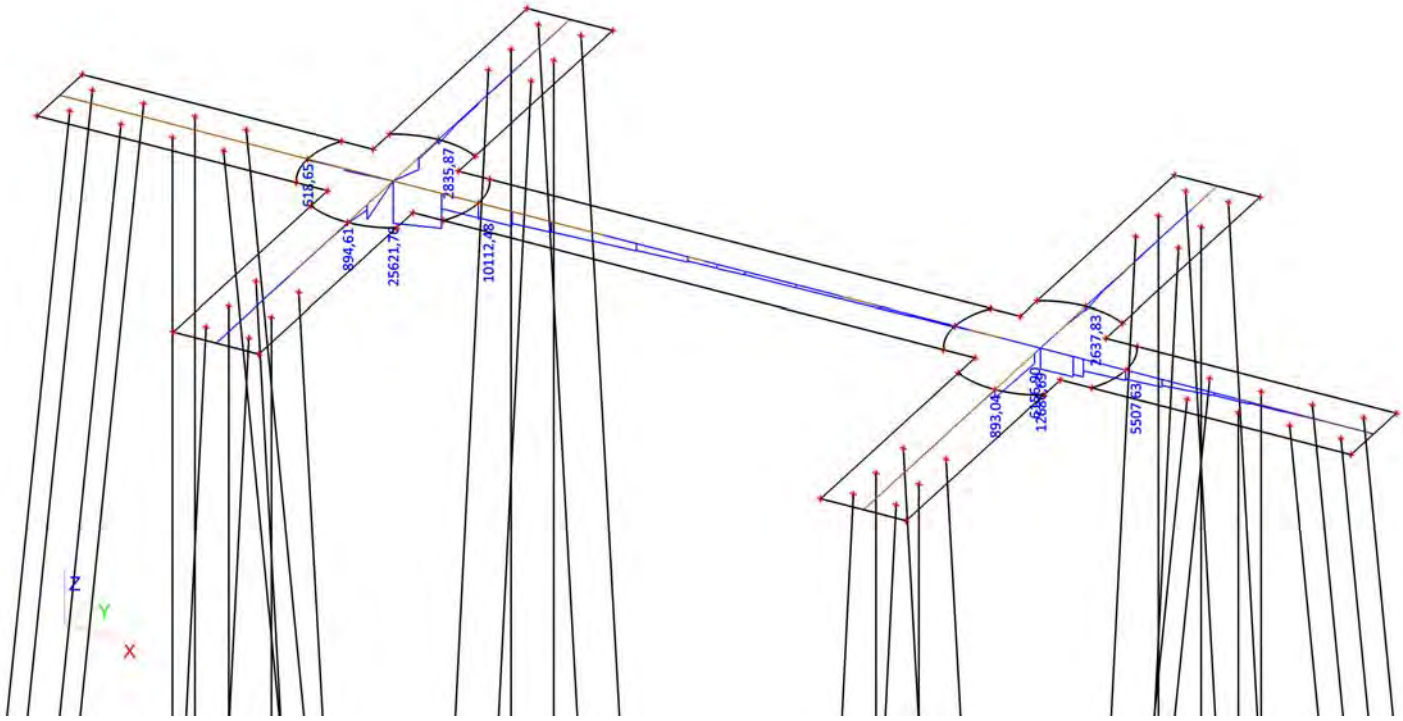

18. 2D element - Interne krachten; myD+

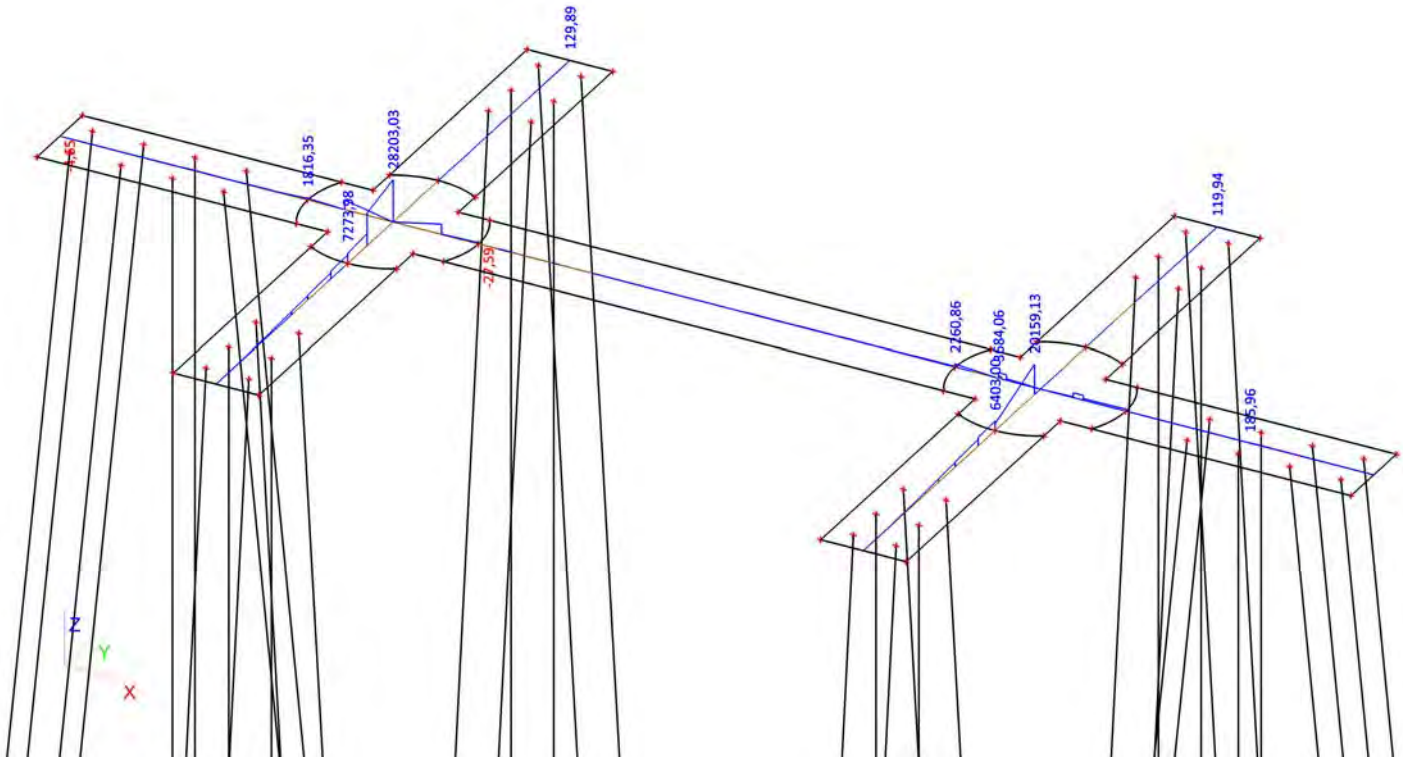

19. 2D element - Interne krachten; myD-

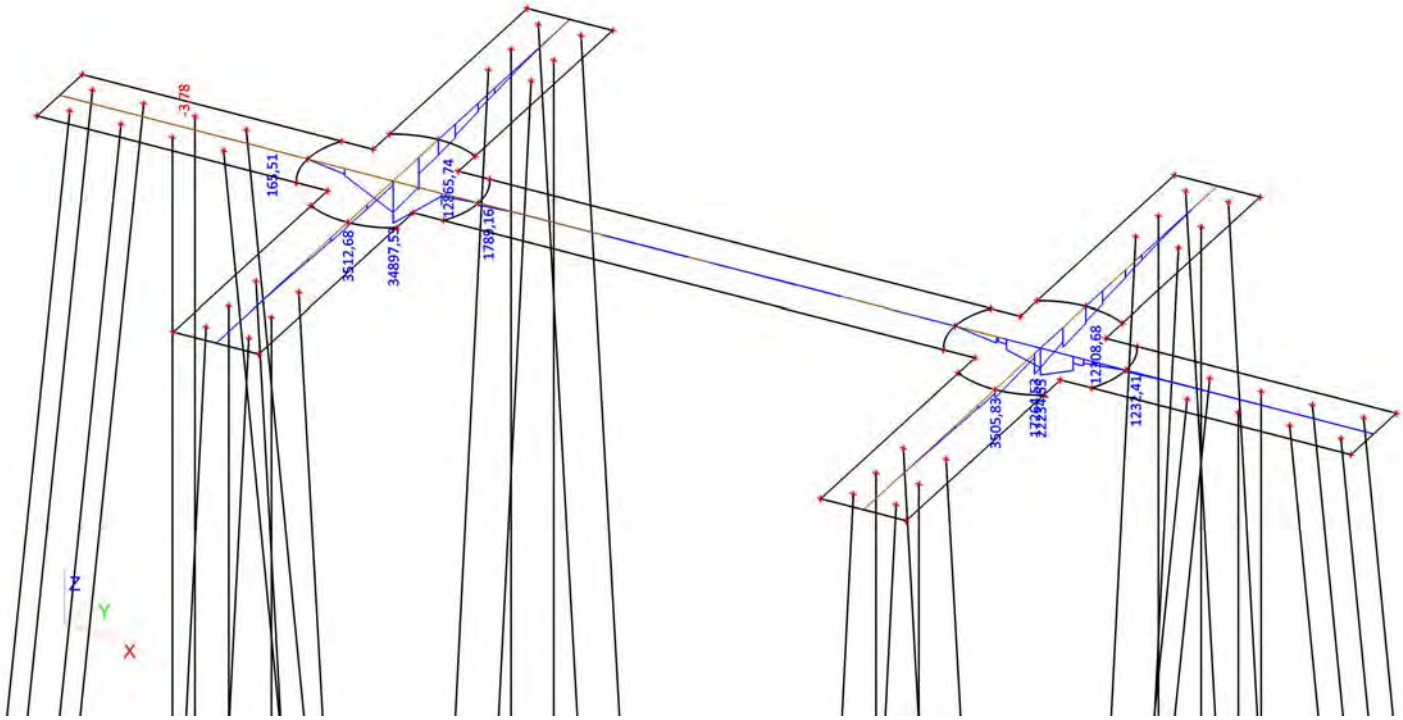

20. 2D element - Interne krachten; vx

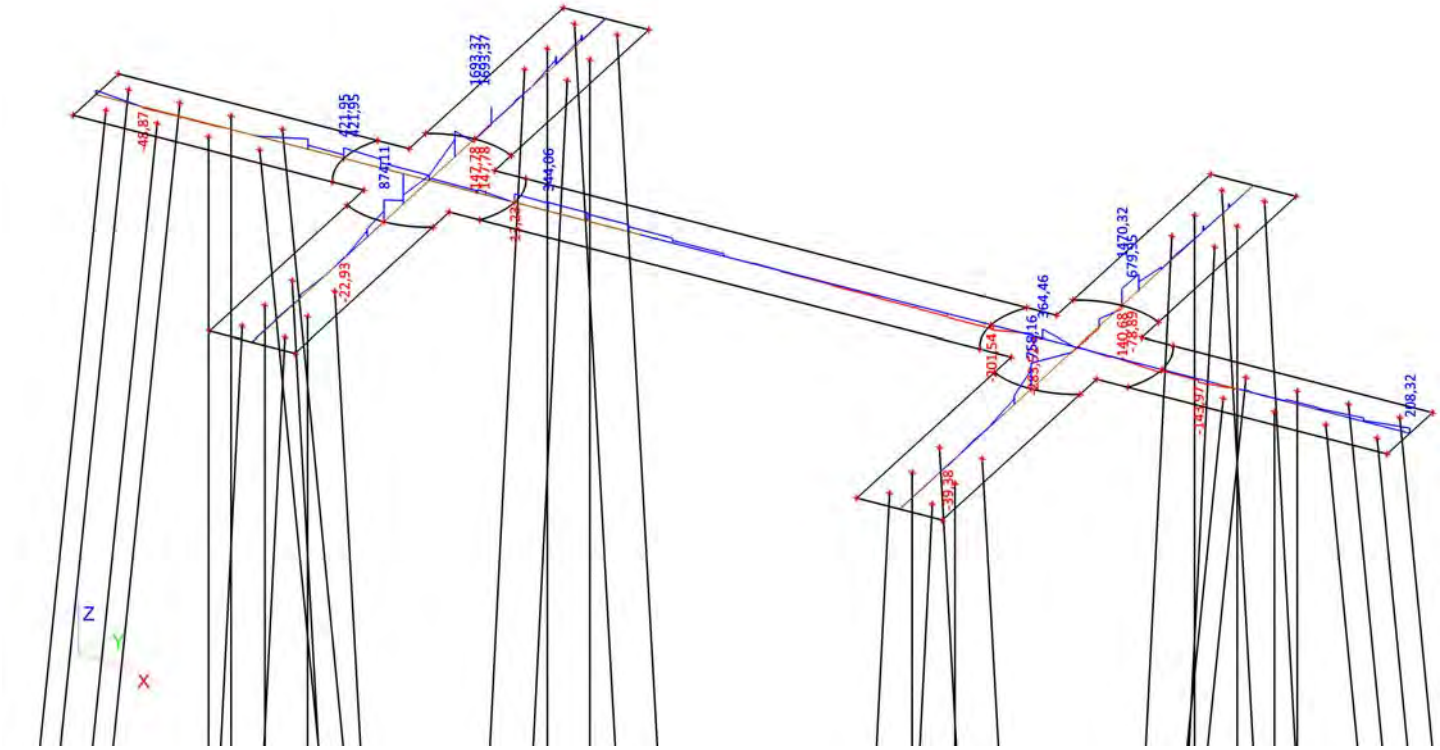

21. 2D element - Interne krachten; vy

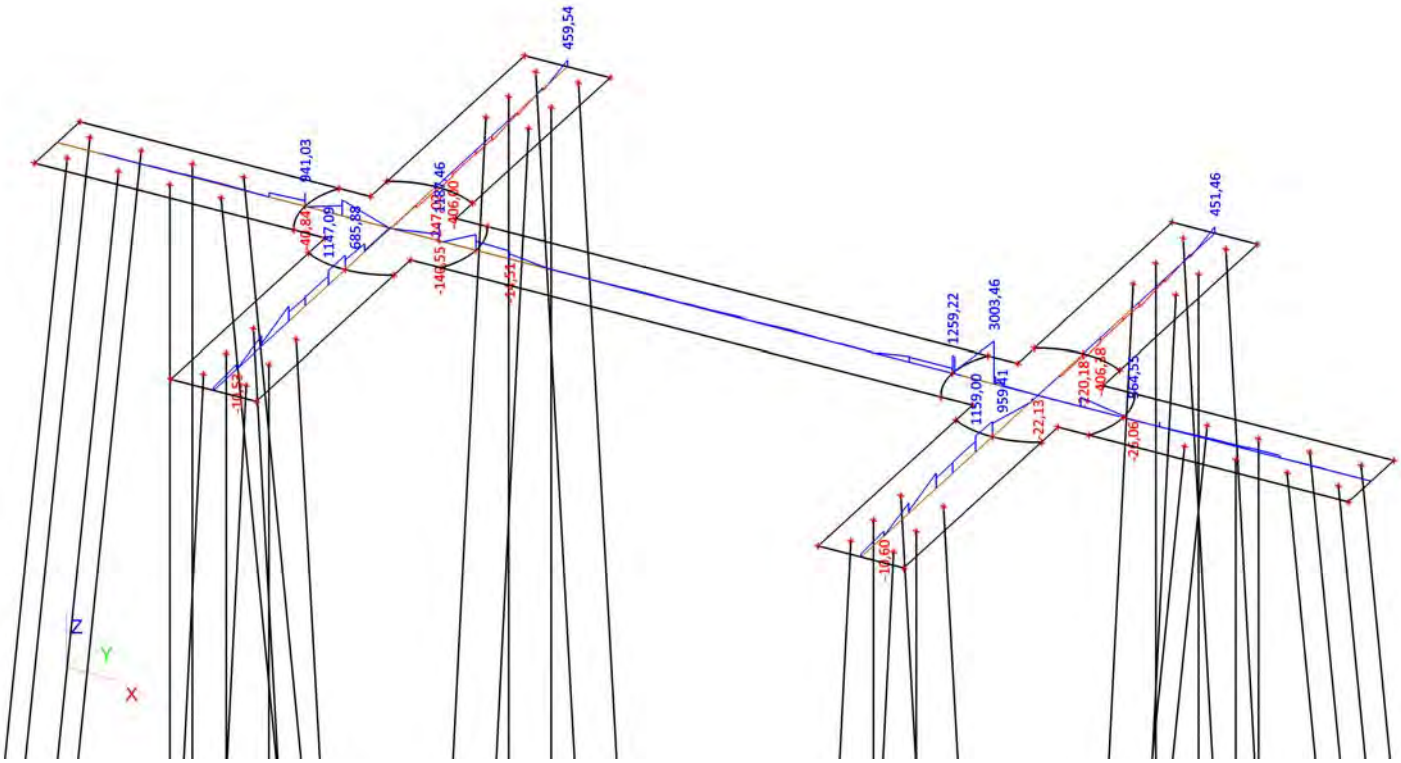

Ontwerpberekening paalfundering mastfundaties

Project:
Randstad 380 kV Noordring

Opdrachtgever:
TenneT TSO

Revisie	Datum	Wijzigingen ten opzichte van vorige revisie
00	18-07-2013	Eerste uitgave
01	05-08-2013	Definitief - aanvulling naar aanleiding overleg Tennet TSO

Documentnummer: R3N-OWR-0008

Opsteller	*Controleur*	*Vrijgever*
R. Meeuwsen Geotechnisch specialist	P. de Jager Ontwerp Manager	Arjan Hogenboom Project Manager

Distributie

Naam	Bedrijf
Extern	
Guido Volman	TenneT TSO
Intern	
Arjan Hogenboom	BAM
Pieter de Jager	BAM
Eric van Rooijen	BAM
David van Loenen	BAM
Rob Bakker	BAM
Erwin ten Cate	BAM
Michael Desmet	Fabricom
Hein Pijnappel	Mott MacDonald

Beheer

De documentbeheerder van de combinatie verzorgt de distributie. Alleen houders van een geregistreerde kopie ontvangen automatisch aanvullingen en/of wijzigingen. Het is de verantwoordelijkheid van de houders het document up to date te houden. De laatste versie is altijd beschikbaar in ThinkProject!

Indien documenten worden geprint, geldt het volgende: een geregistreerde kopie is geldig vanaf de datum van uitgifte. Bij uitgifte van een document met een hoger revisienummer verliest de voorgaande versie automatisch haar geldigheid. Kopiehouders dienen het voorblad van een ongeldige versie te markeren met een diagonale lijn samen met de tekst 'vervallen'.

Neem bij twijfel over de geldende versie contact op met de documentbeheerder.

Inhoudsopgave

1. Inleiding 4
2. Uitgangspunten 5
2.1. Inleiding 5
2.2. Normen, richtlijnen en gebruikte programmateur 5
2.3. Grondonderzoek en bodemopbouw 5
2.4. Negatieve kleef 6
2.5. Paalconfiguratie en belastingen 6
2.6. Overige uitgangspunten 7
3. Uitwerking ontwerp 8
3.1. Berekening draagkracht palen op druk en trek 8
3.2. Berekening vervormingen door verticale belasting 8
3.3. Berekening horizontale beddingsconstanten 9
4. Conclusies en aanbevelingen 11
4.1. Conclusies 11
5. Bijlagen 12
Bijlage 1 Sonderingen (DKM428 en DKM430) 13
Bijlage 2 Berekening palen op druk 17
Bijlage 3 Berekening palen op trek 27
Bijlage 4 Berekening horizontale beddingsconstanten 37

1. INLEIDING

De komende jaren werken het ministerie van Economische Zaken en TenneT aan de aanleg van een nieuwe 380 kV hoogspanningsverbinding in de Randstad. De nieuwe verbinding stelt de voorziening van elektriciteit in de Randstad veilig.

Het ontwerptracé van de nieuwe Randstad 380 kV verbinding is sinds eind 2008 bekend. De plannen gaan uit van twee ringen, tussen Wateringen en Zoetermeer (de Zuidring) en tussen Zoetermeer en Beverwijk (de Noordring). Eind 2012 heeft Tennet de aanbesteding opgestart voor het gedeelte van de Noordring tussen station Vijfhuizen en Bleiswijk. Het contract is opgedeeld in twee percelen, waarbij de grens ligt bij Zuidelijke Ringvaart. Dit document heeft betrekking op perceel 2 (het zuidelijke gedeelte).

BAM heeft op 8 juli 2013 het contract ondertekend met TenneT voor het ontwerp en realiseren van perceel 2. Het voorliggende document is onderdeel van het Definitief Ontwerp en behandelt de paalfundering van de mastfundaties.

Op dit moment is nog niet ter plaatse van alle masten grondonderzoek beschikbaar. Om toch inzicht te krijgen of het gekozen paalsysteem kan voldoen is een representatieve mastlocatie gekozen om door te rekenen. Op basis van het wel beschikbare grondonderzoek is gekozen voor mast 133. In het uitvoeringsontwerp (UO) zullen de berekeningen voor alle masten worden uitgevoerd.

2. UITGANGSPUNTEN

2.1. INLEIDING

Op dit moment is het aanwezige grondonderzoek nog zeer summier. Het is dan ook niet mogelijk of zinvol om voor alle poeren een berekening van het paaldraagvermogen te maken.

Om toch een beeld van de mogelijk opneembare belastingen op en de veerstijfheid van de palen te verkrijgen is ervoor gekozen om voor één poer een berekening te maken.

De verschillende typen funderingen zijn zo ontworpen dat de palen een maximale trek van ca. 500 kN krijgen. Verder worden overall palen 450x450 toegepast. Belastingtechnisch gezien worden veel palen dus ongeveer gelijk belast.

Er is gekozen voor poer type C omdat bij deze poer de palen relatief dicht op elkaar in een groep staan. De nadelige groepswerking komt daarbij het beste tot uiting. Door de groepswerking neemt de horizontale bedding van de palen af en wordt ook het verticaal trekvermogen beperkt.

Extra druk of trekvermogen is te behalen door palen dieper te slaan. De horizontale bedding is echter niet eenvoudig te verhogen. Dit maakt dat de berekening van poer C een goede veilige indicatie geeft voor de overige poeren.

2.2. NORMEN, RICHTLIJNEN EN GEBRUIKTE PROGRAMMATEUR

De berekeningen van de draagkracht van de palen op druk en trek is uitgevoerd conform NEN –EN 9997, Eurocode 7, inclusief nationale bijlage.

De berekening van de paaldraagkracht is uitgevoerd met het programma D-Foundations versie 8.1. De berekening van de horizontale beddingsconstanten is uitgevoerd met een spread sheet volgens Ménard.

2.3. GRONDONDERZOEK EN BODEMOPBOUW

Bij mast 133 zijn twee bruikbare sonderingen beschikbaar, te weten de sonderingen DKM428 en DMK430, waarvan DKM428 maatgevend is.

De sonderingen zijn opgenomen in bijlage 1.

De grondwaterstand is aangehouden op 0,5m onder maaiveld.

In tabel 1 is de globale bodemopbouw opgenomen, met bijbehorende parameters.

Bovenkant laag (m t.o.v. NAP)	Grondsoort	□/□□$_s$ (kN/m^3)	□' (°)	c' (kPa)
-1,6	Veen	10,5/10,5	15	2
-2,7	Klei humeus	14,4/14,4	17,5	2
-5,1	Veen	10,5/10,5	15	2
-6,0	Klei siltig	15,8/15,8	22,5	3,8
-11,2	Basisveen	10,8/10,8	15	2
-12,1	Zand	18/20	30	0

Tabel 1 Bodemopbouw op basis van DKM428

2.4. NEGATIEVE KLEEF

Voor de drukpalen is gerekend met negatieve kleef op de palen tot aan de onderkant basisveenlaag op NAP-12,1 m, voor trekpalen is de kleef uit het Holoceen verwaarloosd. Hoewel er geen sprake is van bovenbelasting, is enige maaiveldzakking niet uitgesloten gezien de sterk samendrukbare ondergrond. Er is geen ophoging in rekening gebracht.

2.5. PAALCONFIGURATIE EN BELASTINGEN

Er is uitgegaan van prefab betonnen palen 450 x 450 mm^2. De palen staan schoor onder 1:10. Op basis van de paalconfiguratie (weergegeven in figuur 1) en de belastingen op de constructie is een paalbelasting afgeleid (R3N-OWR-0005 Constructieberekening mastfundaties type C).

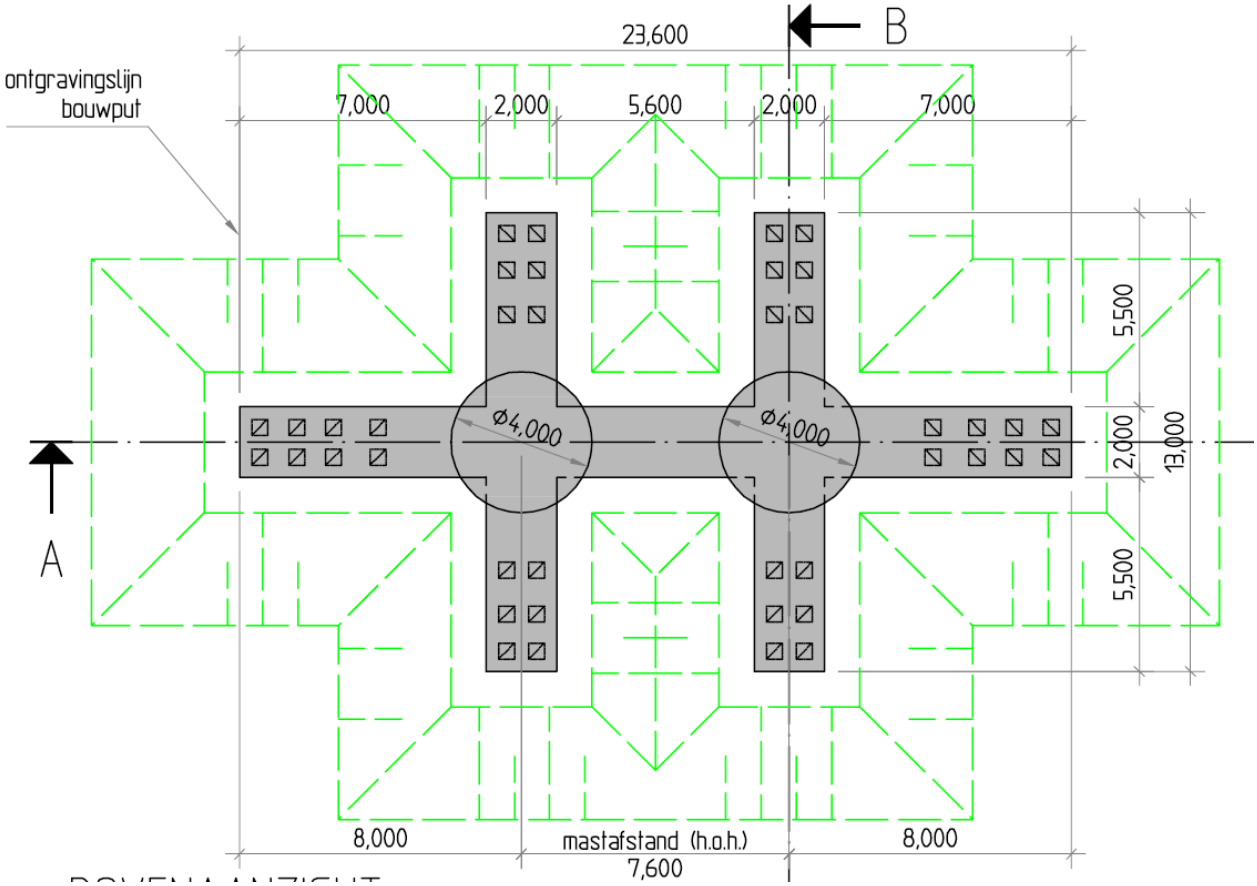

Figuur 1 Overzicht gehele fundering

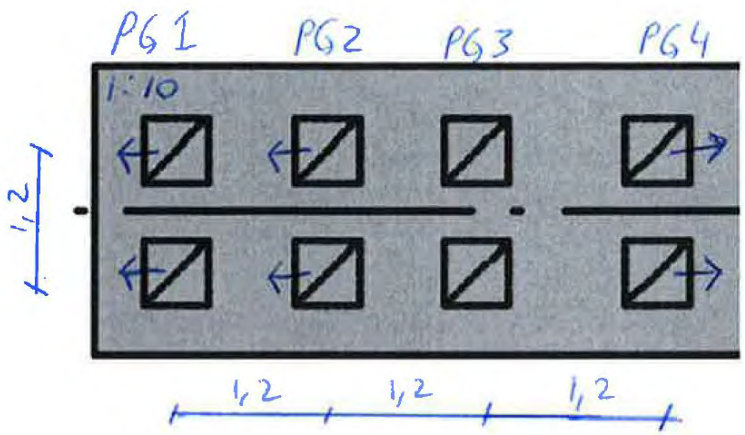

Figuur 2 Paalconfiguratie ter bepaling van draagvermogen en horizontale beddingsconstanten, paalgroep 1 t/m 4

De maximale paalbelasting is conform opgaaf weergegeven in tabel 2.

Mast 133	Druk		Trek	
funderingtype C	$F_{c;d}$ (kN)	$F_{c;k}$ (kN)	$F_{t;d}$ (kN)	$F_{t;k}$ (kN)
paalgroep 1	785	581	268	199
paalgroep 2	805	596	282	209
paalgroep 3	837	620	299	221
paalgroep 4	875	648	319	236

Tabel 2 Paalbelastingen

De representatieve belasting is in dit geval aangehouden als de rekenwaarde van de belasting / 1,35.

Horizontale belasting is niet apart beschouwd. Daarentegen zijn horizontale beddingsconstanten bepaald waarmee in een raamwerkmodel de vervormingen van de paal en de momenten in de paal berekend kunnen worden, invoer hiervoor is de beddingsconstante.

2.6. OVERIGE UITGANGSPUNTEN

Er is ter plaatse van de constructie geen reductie als gevolg van ontgraven toegepast. Ontgraving van een sleuf t.b.v. constructie van de poer is verwaarloosd, gezien de smalle afmetingen en de diepte van de draagkrachtige laag.

Voor de ξ_3 is een waarde van 1,20 gehanteerd, voor ξ_4 is een waarde van 0,96 gehanteerd (stijve constructie) en voor γ_R een waarde van 1,2 voor drukpalen en 1,35 voor trekpalen (conform de NEN 9997-1).

Door windbelasting ontstaat afwisselend druk en trek in de palen. Hierdoor is ter bepaling van het trekdraagvermogen gerekend met γ_{VAR} =1,50. De gehanteerde paalklassefactoren zijn die van geprefabriceerde betonpalen conform tabel 7.c uit NEN-9997-1 ; α_p= 1,0, α_s = 0,010 en α_t = 0,007.

Voor de berekening van het groepseffect voor horizontaal belaste palen is een reductiefactor berekend op basis van de methode van Reese en van Impe. Voor een beschrijving van deze methode wordt verwezen naar ‘Single piles and pile groups under lateral loading’, Reese L.C., van Impe W.F.

3. UITWERKING ONTWERP

3.1. BEREKENING DRAAGKRACHT PALEN OP DRUK EN TREK

De berekening van de draagkracht van de palen op druk ter plaatse van mast 133 is bijgevoegd in bijlage 2. De berekening van de draagkracht van de palen op trek ter plaatse van mast 133 is bijgevoegd in bijlage 3.

Belasting op trek is maatgevend. Voor de rekenwaarde van de palen op trek is onderscheid gemaakt tussen de vier paalgroepen, zie figuur 2. Alle palen kunnen gelijktijdig op trek belast worden.

De berekende negatieve kleef door maaiveldzakking is 127kN.

In tabel 3 zijn de rekenwaarde van de draagkracht met paalpuntniveau NAP-21,5 m ter plaatse van mast 133 weergegeven.

Mast 133	Druk	Trek
funderingtype C	$R_{c;d}$ (kN)	$R_{t;d}$ (kN)
paalgroep 1	2118	316
paalgroep 2	2118	282
paalgroep 3	2118	325
paalgroep 4	2118	359

Tabel 3 Paalpuntniveau (NAP -21,5m) en bijhorende draagkracht

Bij een paalpuntniveau van NAP -21,5 m voldoet de paal juist voor maatgevende paalgroep 2.

3.2. BEREKENING VERVORMINGEN DOOR VERTICALE BELASTING

In bijlage 2 is een berekening van de zakking van de paal belast op druk opgenomen. De maximale zakking van de paal is 18mm. Dit is grotendeels toe te rekenen aan s_2, zakking van de paalgroep door samendrukking van de lagen tot 4D onder de paalpunt (zie 7.6.4.2, NEN9997-1). De gemiddelde elasticiteitsmodulus van deze laag is aangenomen op $E_{ea;gem} = 5xq_c \approx 50.000kN/m^2$. Aangezien de kracht grotendeels wordt afgedragen via de schacht (±75%) is ter bepaling van de veerconstante de helft van de berekende s_2 meegenomen.

Rijzing van de paal op trek is berekend conform paragraaf 7.6.4.3 van NEN 9997-1. De rijzing van paalpunt (s_b) als gevolg van belasting op de paal is bepaald volgens figuur 7.o van paragraaf 7.6.4.2 van NEN 9997-1 uit de verhouding $R_{s;cal;i}$ / $R_{s;cal;max;i}$ en bedraagt ca. 2 mm.

De gemiddelde axiale veerstijfheid voor druk en trek zijn weergegeven in tabel 4 en tabel 5.

Axiale veerstijfheid Druk			
	$R_{c;k}$ (kN)	s (mm)	$k_{v;SLS}$ (kN/m)
paalgroep1	581	10	58100
paalgroep2	596	10	59600
paalgroep3	620	10	62000
paalgroep4	648	10	64800

Tabel 4 Axiale veerstijfheid druk

Axiale veerstijfheid Trek			
	$R_{c;k}$ (kN)	s (mm)	$k_{v;SLS}$ (kN/m)
paalgroep1	199	2	99500
paalgroep2	209	2	104500
paalgroep3	221	2	110500
paalgroep4	236	2	118000

Tabel 5 Axiale veerstijfheid trek

Elastische vervorming is buiten beschouwing gelaten en dient in het raamwerkmodel ESA te worden meegenomen.

3.3. BEREKENING HORIZONTALE BEDDINGSCONSTANTEN

De horizontale beddingsconstanten zijn berekend volgens de methode Ménard op basis van conusweerstand en grondsoort.

In bijlage 4 is de berekening van de horizontale beddingsconstanten opgenomen. De horizontale beddingsconstanten die als input voor ESA gebruikt kunnen worden zijn te vinden in tabellen 6 en 7. Tabel 6 geldt indien de horizontale belasting uit de X-richting komt en tabel 7 wanneer de belasting uit de Y-richting komt, zie figuur 3.

De verschillen in horizontale beddingsconstanten per richting wordt veroorzaakt door groepswerking. Komt de belasting uit de X-richting wordt een kleiner grondmassief gemobiliseerd dan wanneer de belasting uit de Y-richting komt. Ter illustratie;

Wanneer de belasting uit de X-richting komt, vervormen alle palen in het verlengde van de belasting. De vervorming wordt gehinderd door de grond. Palen 2, 4, 6 en 8 ondervinden minder weerstand van de grond, omdat palen 1, 3, 5 en 7 ook vervormen en de grond waar palen 2, 4, 6 en 8 weerstand van zouden moeten ondervinden, al wordt ontspannen.

De gemiddelde groepsfactor over de 8 palen is berekend op 0,54 in de X-richting en 0,39 in de Y-richting. Deze gemiddelde reductie kan op de beddingsconstanten worden gezet die in ESA worden gebruikt.

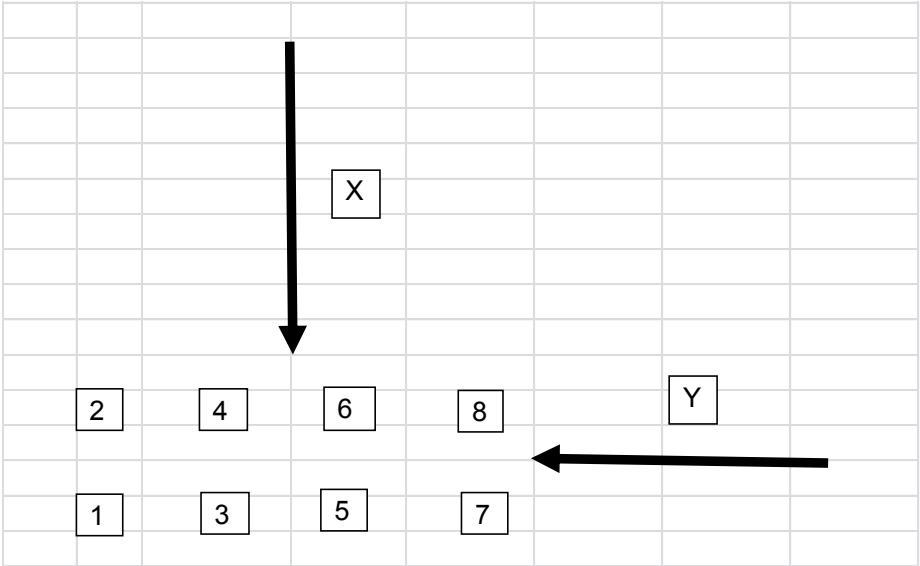

Figuur 3 Horizontale beddingsconstanten per belastingsrichting

In de volgende tabellen worden deze gereduceerde beddingsconstanten gepresenteerd. $k_{h;rep;laag}$ en $k_{h;rep;hoog}$ zijn berekend door een deling respectievelijk vermenigvuldiging van 1,5 van de verwachtingswaarde.

X-richting		Voor ESA berekeningen			
soort	b.k. laag	per m^2 paal		per m'paal	
	(m+ NAP)	$k_{h,rep,laag}$ (kN/m^3)	$k_{h,rep,hoog}$ (kN/m^3)	$k_{h,rep,laag}$ (kN/m/m)	$k_{h,rep,hoog}$ (kN/m/m)
Veen	-1.6	1,400	3,200	700	1,600
Klei	-2.7	500	1,200	300	600
Veen	-5.1	1,400	3,200	700	1,600
Klei	-6.0	800	1,800	400	900
Veen	-11.2	1,400	3,200	700	1,600
Zand	-12.1	13,600	30,600	6,900	15,600
Zand	-22.0	16,300	36,700	8,300	18,700

Tabel 6 Horizontale beddingsconstanten voor belasting uit de X-richting (zie figuur 3)

Y-richting		Voor ESA berekeningen			
soort	b.k. laag	per m^2 paal		per m'paal	
	(m+ NAP)	$k_{h,rep,laag}$ (kN/m^3)	$k_{h,rep,hoog}$ (kN/m^3)	$k_{h,rep,laag}$ (kN/m/m)	$k_{h,rep,hoog}$ (kN/m/m)
Veen	-1.6	1,000	2,300	500	1,200
Klei	-2.7	400	900	200	400
Veen	-5.1	1,000	2,300	500	1,200
Klei	-6.0	600	1,300	300	700
Veen	-11.2	1,000	2,300	500	1,200
Zand	-12.1	9,800	22,100	5,000	11,300
Zand	-22.0	11,800	26,500	6,000	13,500

Tabel 7 Horizontale beddingsconstanten voor belasting uit de Y-richting (zie figuur 3)

4. CONCLUSIES EN AANBEVELINGEN

4.1. CONCLUSIES

Mast 133 kan gefundeerd worden op 450x450 prefab beton palen tot een diepte van -21,5m NAP. De palen hebben een lengte van ca. 20,0m. Trek voor paalgroep 2 is maatgevend.

In het uitvoeringsontwerp (UO) – als al het grondonderzoek beschikbaar is gekomen – worden de paalfunderingsberekeningen voor alle masten uitgevoerd.

5. BIJLAGEN

Bijlage 1 Sonderingen (DKM428 en DKM430)

Bijlage 2 Berekening palen op druk

Bijlage 3 Berekening palen op trek

Bijlage 4 Berekening horizontale beddingsconstanten

BIJLAGE 1 SONDERINGEN (DKM428 EN DKM430)

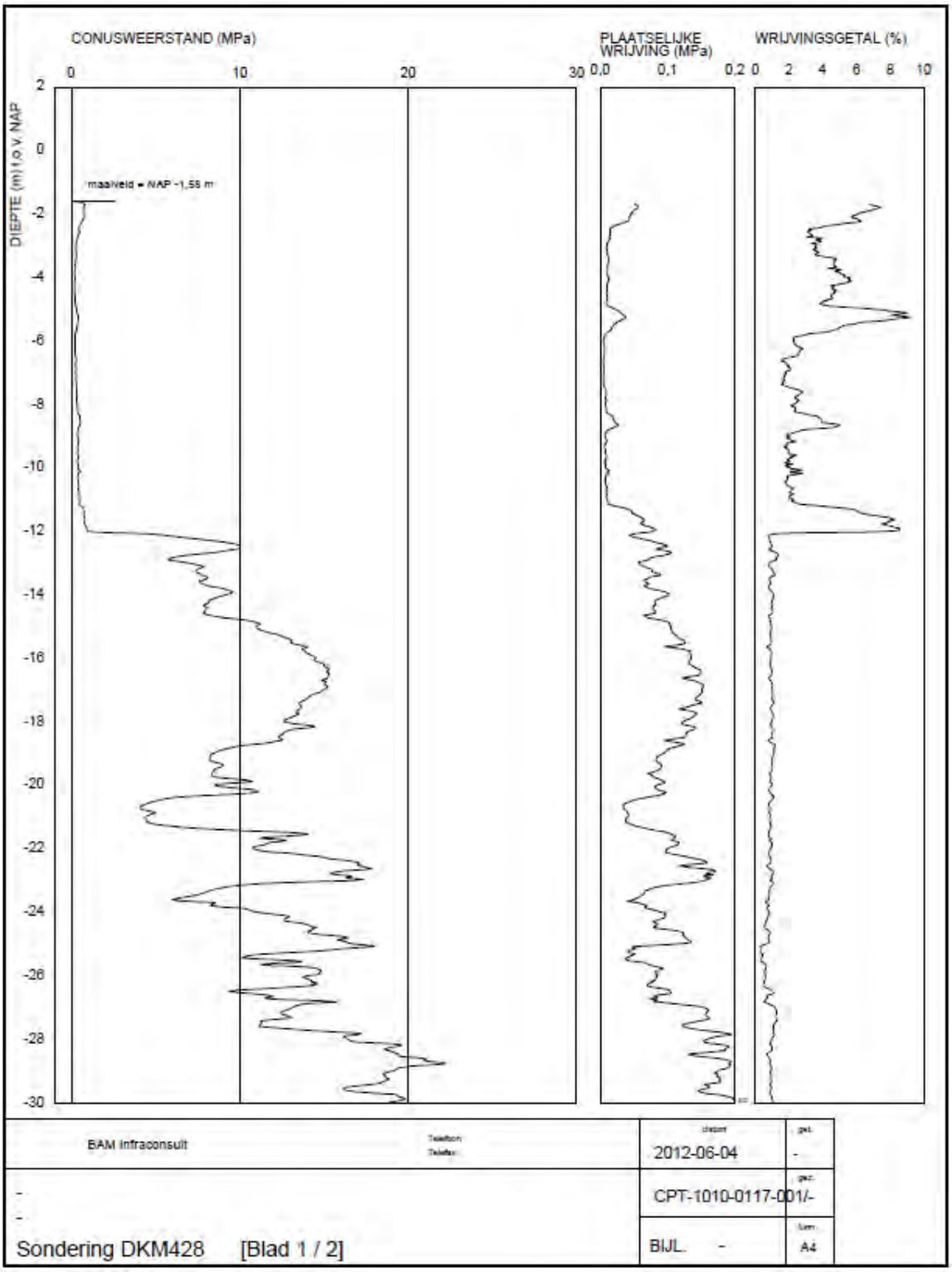

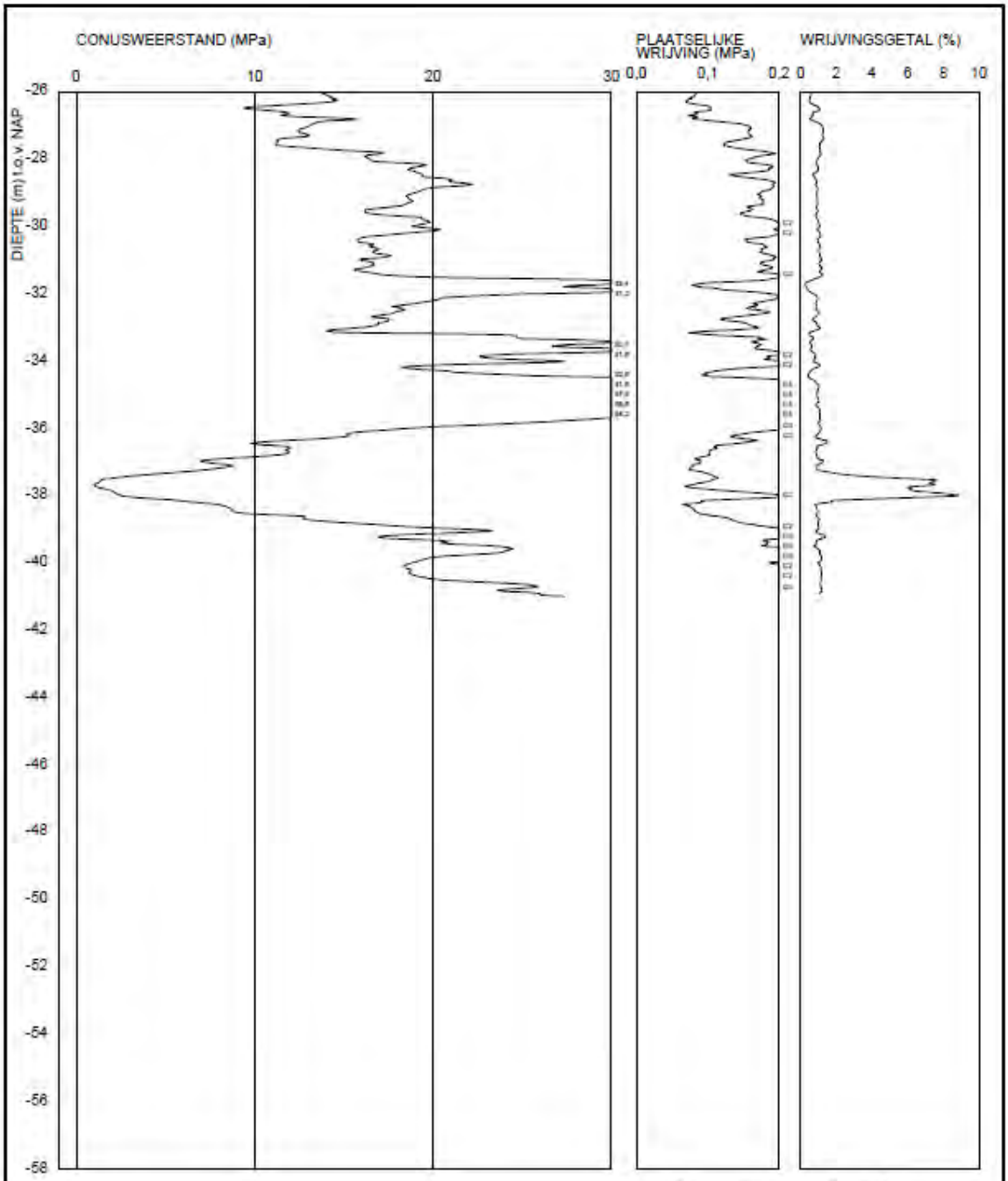

BAM Infraconsult	2012-06-04	-
-	CPT-1010-0117-001/-	
Sondering DKM428 [Blad 2 / 2]	BIJL. -	A4

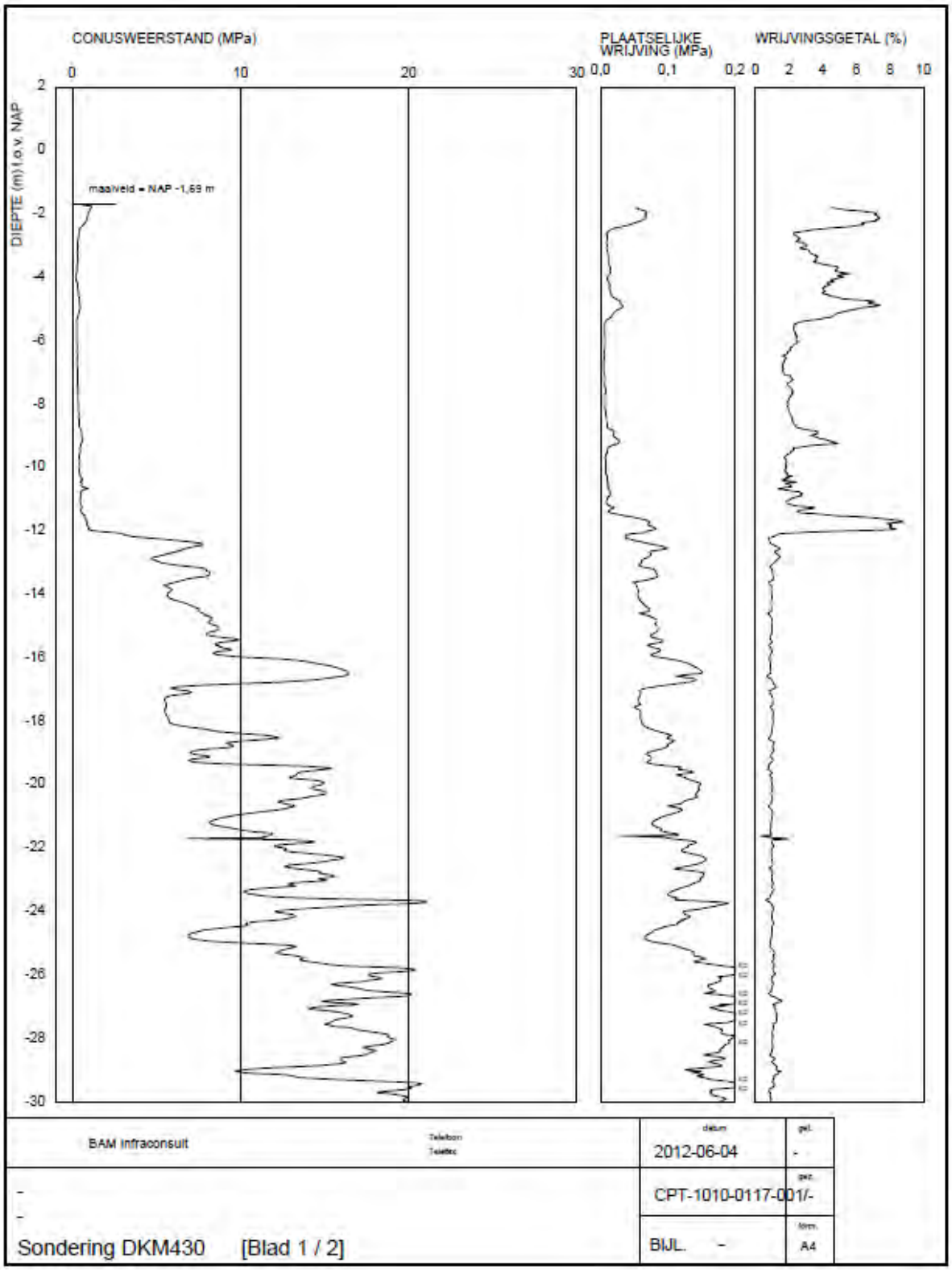
CONUSWEERSTAND (MPa)
0
10
20
30
PLAATSELIJKE WRIJVING (MPa)
0,0
0,1
0,2
WRIJVINGSGETAL (%)
0
2
4
6
8
10
DIEPTE (m) t.o.v. NAP
2
0
-2
-4
-6
-8
-10
-12
-14
-16
-18
-20
-22
-24
-26
-28
-30
maaiveld = NAP -1,69 m
BAM Infraconsult
2012-06-04
CPT-1010-0117-001/-
Sondering DKM430 [Blad 1 / 2]
BIJL. -
A4

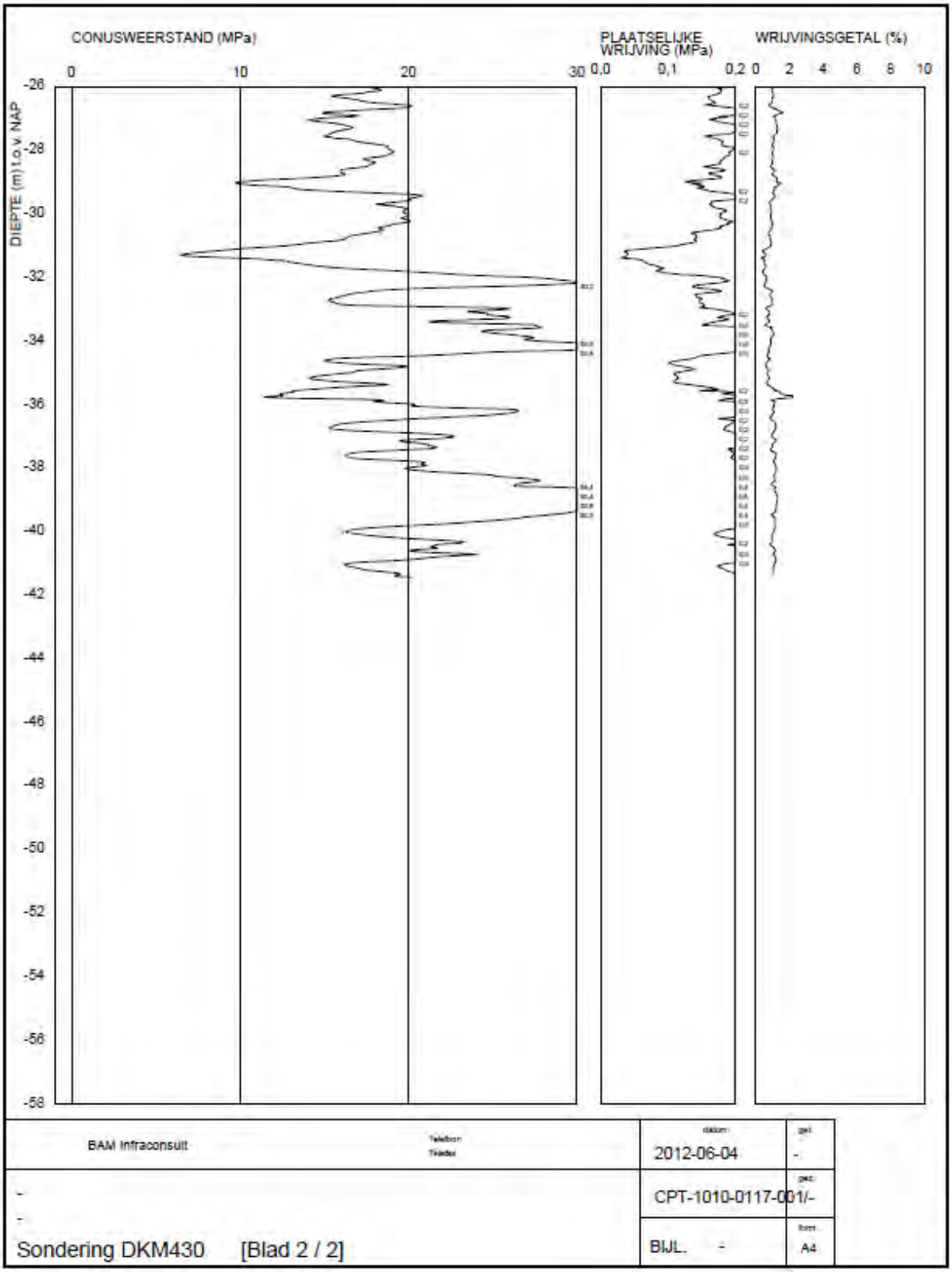
CONUSWEERSTAND (MPa)
0
10
20
30
PLAATSELIJKE WRIJVING (MPa)
0,0
0,1
0,2
WRIJVINGSGETAL (%)
0
2
4
6
8
10
DIEPTE (m) t.o.v. NAP
-26
-28
-30
-32
-34
-36
-38
-40
-42
-44
-46
-48
-50
-52
-54
-56
-58
BAM Infraconsult
2012-06-04
CPT-1010-0117-001/-
Sondering DKM430 [Blad 2 / 2]
BIJL. -
A4

Report for D-Foundations 8.1

Design and Verification according to Eurocode 7 of Bearing/Tension Piles and Shallow Foundations
Developed by Deltares

Company:	BAM Infraconsult
Date of report:	15-7-2013
Time of report:	12:31:28
Date of calculation:	15-7-2013
Time of calculation:	12:31:22
Filename:	D:\..\berekeningen\Dfoundations\druk\Mast 133_DKM428-430 DRUK DO
Project identification:	
	D-Foundations Mast 133_DKM428-430 DRUK DO

1 Table of Contents

1 Table of Contents 2
2 Input Data 3
2.1 General Input Data 3
2.2 General Report Data 3
2.3 Application Area Model Bearing Piles 3
2.4 Superstructure 3
2.5 General CPT Data 3
2.5.1 View of CPT's in Foundation Plan 3
2.6 Soil Data 4
2.6.1 Soil Profile DKM428 4
2.6.2 Soil Profile DKM430 4
2.7 Pile Types 5
2.7.1 Pile type : Rect 450x450 5
2.8 Foundation Plan 6
2.8.1 View of Foundation Plan 6
2.9 Excavation Data 6
2.10 Totalized Loads (design values) 7
2.11 Requirements 7
2.12 Overruled Parameters 7
2.13 Calculation Options 7
2.14 Model Options 7
3 Bearing Piles (EC7-NL): Results of the Option Complete Verification 8
3.1 Errors and Warnings 8
3.2 Remarks 8
3.3 Calculation Parameters 8
3.3.1 Pile Factors 8
3.3.2 Pile type : Rect 450x450 8
3.4 Verification of Limit State EQU 9
3.5 Verification of Limit State GEO 9
3.6 Verification of Serviceability limit state 9
3.7 Additional Information 9
3.7.1 The bearing capacity of shaft and point at Limit state GEO 10
3.7.2 The bearing capacity of shaft and point at the Serviceability Limit State 10

2 Input Data

2.1 General Input Data

Model	Bearing Piles (EC7-NL)

2.2 General Report Data

Geotechnical consultant :	
Design engineer superstructure :	
Principal :	
Title 1 :	
Title 2 :	
Title 3 :	D-Foundations Mast 133_DKM428-430 DRUK DO
Number of project :	-
Location of project :	

2.3 Application Area Model Bearing Piles

The verifications performed by the model BEARING PILES of D-FOUNDATIONS concern pile foundations on which axial static or quasi-static loads cause pressures in the piles. The calculations of pile forces and pile displacements are based on Cone Penetration Tests. Possible rise of (tension-)piles and horizontal displacements of piles and/or pile groups are not taken into account.

2.4 Superstructure

Rigidity of the superstructure :	Rigid

2.5 General CPT Data

Number of CPT's :	2
Timing of CPT's :	CPT - Excavation - Install

2.5.1 View of CPT's in Foundation Plan

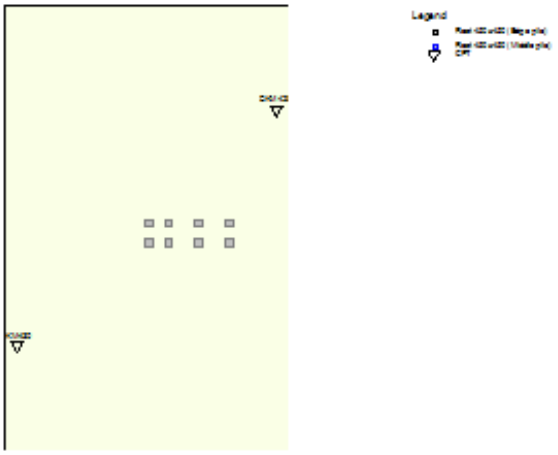

Number/Name CPT	Pile tip level [m R.L.]	Top of pos. friction zone [m R.L.]	Bottom of neg. friction zone [m R.L.]	X-coor-dinate [m]	Y-coor-dinate [m]
1: DKM428	-21.50	-12.10	-12.10	99583.01	459853.26
2: DKM430	-21.50	-12.00	-12.00	99566.81	459838.51

2.6 Soil Data

Number of soil profiles (= number of CPT's) : 2

2.6.1 Soil Profile DKM428

Belonging to CPT	DKM428
Surface level in [m. reference level] :	-1.580
Phreatic level in [m. reference level] :	-2.180
Pile tip level in [m. reference level] :	-21.500
Top of positive skin friction zone in [m. reference level] :	-12.100
Bottom of negative skin friction zone in [m. reference level] :	-12.100
OCR-value foundation layer :	1.00
Expected groundlevel settlement in [m] :	0.110
Number of layers in profile :	6

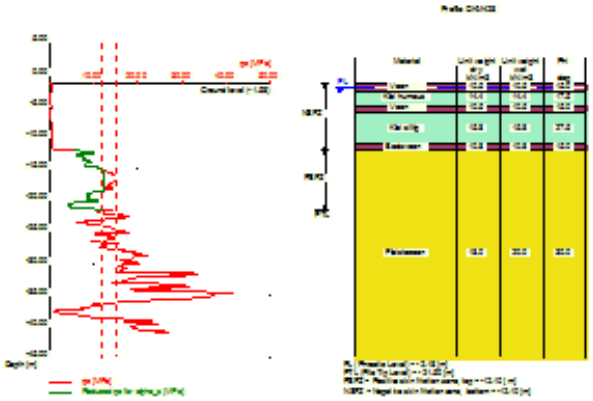

Number layer	Top layer [m R.L.]	Gamma [kN/m3]	Gamma;sat [kN/m3]	Phi [deg]	Soil Type	Median (Sand/Gravel) [mm]
1	-1.580	10.50	10.50	15.00	Peat	--
2	-2.700	14.40	14.40	17.50	Clay	--
3	-5.100	10.50	10.50	15.00	Peat	--
4	-6.000	15.80	15.80	27.50	Clay	--
5	-11.200	10.80	10.80	15.00	Peat	--
6	-12.100	18.00	20.00	30.00	Sand	0.200

2.6.2 Soil Profile DKM430

Belonging to CPT	DKM430
Surface level in [m. reference level] :	-1.690
Phreatic level in [m. reference level] :	-2.290

Pile tip level in [m. reference level] :	-21.500
Top of positive skin friction zone in [m. reference level] :	-12.000
Bottom of negative skin friction zone in [m. reference level] :	-12.000
OCR-value foundation layer :	1.00
Expected groundlevel settlement in [m] :	0.110
Number of layers in profile :	6

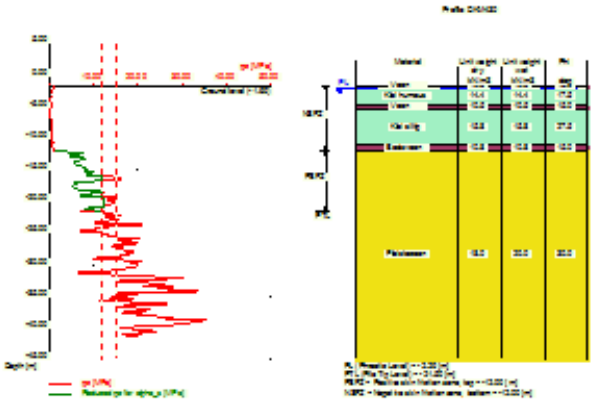

Number layer	Top layer [m R.L.]	Gamma [kN/m3]	Gamma;sat [kN/m3]	Phi [deg]	Soil Type	Median (Sand/Gravel) [mm]
1	-1.690	10.50	10.50	15.00	Peat	--
2	-2.200	14.40	14.40	17.50	Clay	--
3	-4.800	10.50	10.50	15.00	Peat	--
4	-5.500	15.80	15.80	27.50	Clay	--
5	-11.100	10.80	10.80	15.00	Peat	--
6	-12.000	18.00	20.00	30.00	Sand	0.200

2.7 Pile Types

2.7.1 Pile type : Rect 450x450

Pile type :	Prefabricated concrete pile
Materialtype for pile :	Concrete
Slip layer :	None
Pile shape :	Rectangular pile

beta (Shape factor) according to figure 7I, NEN-EN 1997-1:2005.
s (factor for the influence of the shape of the crossection of the pile base) according to NEN-EN 1997-1:2005.

Pile dimensions :

Smallest side pile tip [m] :	0.450
Largest side pile tip [m] :	0.450

2.8 Foundation Plan

Number of piles : 8
Number of collaborating piles* : 8
* : 0 = not defined, 1 = non rigid superstructure, >1 = rigid superstructure

2.8.1 View of Foundation Plan

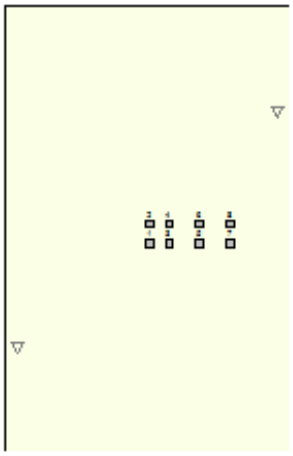

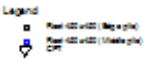

Pile nr/name	X-coordinate [m]	Y-coordinate [m]	Fc;d (EQU/GEO) [kN]	Fc;d (SLS) [kN]	P0 [kN/m2]	Pile head level [m R.L.]
1: 1	99575.00	459845.00	785.00	581.00	0.00	-1.69
2: 2	99575.00	459846.20	785.00	581.00	0.00	-1.69
3: 3	99576.20	459845.00	805.00	596.00	0.00	-1.69
4: 4	99576.20	459846.20	805.00	596.00	0.00	-1.69
5: 5	99578.10	459845.00	837.00	620.00	0.00	-1.69
6: 6	99578.10	459846.20	837.00	620.00	0.00	-1.69
7: 7	99580.00	459845.00	875.00	648.00	0.00	-1.69
8: 8	99580.00	459846.20	875.00	648.00	0.00	-1.69

2.9 Excavation Data

Excavation level in [m. reference level] : -1.580
Reduction model : Safe (NEN)

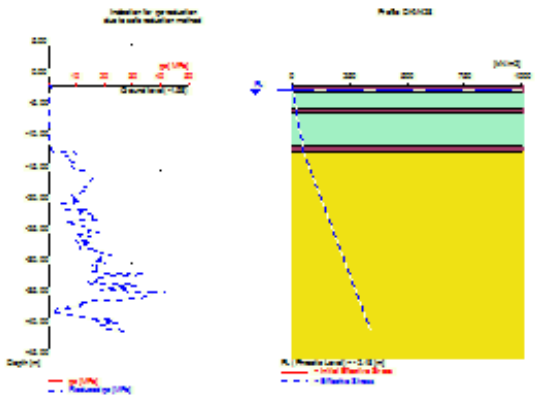

2.10 Totalized Loads (design values)

Total load on all piles
For limit state EQU/GEO in [kN] : 6604.00
For Serviceability limit state in [kN] : 4890.00

2.11 Requirements

Limit state GEO
Maximum allowed settlement in [m] : 0.150
Serviceability Limit State
Maximum allowed settlement in [m] : 0.150

2.12 Overruled Parameters

User defined Factor xi3 [-] : 1.20
User defined Factor xi4 [-] : 0.96

2.13 Calculation Options

Use pilegroup for negative skin friction (standard)
Do not create intermediate results file
Use reduction for continuous flight auger piles (standard)
Suppress the influence of excavations.

2.14 Model Options

Selected pile types :
-Rect 450x450

Selected profiles :
-DKM428
-DKM430

3 Bearing Piles (EC7-NL): Results of the Option Complete Verification

3.1 Errors and Warnings

Warning : The factor xi3 (NEN-EN 1997 1:2005 NEN 9097-1, annex A) is user defined. Is user defined. Evidence to support this from the NEN deviating value has to be provided.
Warning : The factor xi4 (NEN-EN 1997 1:2005 NEN 9097-1, annex A) is user defined. Is user defined. Evidence to support this from the NEN deviating value has to be provided.
Soil profile DKM428
Warning : The lowest pile head level lies below the surface level. The maximum value for the top of the friction zones is therefor reset to -1.69 m relative to reference level.

3.2 Remarks

When checking the survey and testing of soil according to NEN 9097-1 art 3.2.3 lid (e), the program uses the provided CPT test level. It does NOT take into account possible different pile tip levels. When different pile tip levels are used in this calculation, the user itself must check for possibly required additional survey and testing of soil.

Performing the check on NEN 9097-1 par 3.2.3, the average distance between the different CPT's used for this check is 25 m.
The requirements set by NEN 9097-1 par 3.2.3 are met.

3.3 Calculation Parameters

3.3.1 Pile Factors

gamma;b (NEN-EN 1997-1:2005, annex A.6 A.7 A.8, Limit State EQU/GEO) :	1.20
gamma;b (NEN-EN 1997-1:2005, annex A.6 A.7 A.8, the Serviceability Limit State) :	1.00
gamma;s (NEN-EN 1997-1:2005, annex A.6 A.7 A.8, Limit State EQU/GEO) :	1.20
gamma;s (NEN-EN 1997-1:2005, annex A.6 A.7 A.8, the Serviceability Limit State) :	1.00
xi3 (user defined) :	1.20
xi4 (user defined) :	0.96

Note: The excavation(s) is not taken into account in the calculation!

3.3.2 Pile type : Rect 450x450

Pile type :	Prefabricated concrete pile
Materialtype for pile :	Concrete
Slip layer :	None
Pile shape :	Rectangular pile
beta (Shape factor: figuur 7I, NEN-EN 1997 1:2005 par. 7.6.2.3(g): NEN 9097-1 : Pile tip) :	1.00
s (NEN-EN 1997 1:2005 par. 7.6.2.3(h), NEN 9097-1 : factor for the influence of the shape of the crossection of the pile base) :	1.00
Pile dimensions :	
Smallest side pile tip [m] :	0.450
Largest side pile tip [m] :	0.450

CPT	Alpha_s Sand/ Gravel	Alpha_s Clay/Loam Peat	Alpha_p
DKM428	0.0100	--	1.0000
DKM430	0.0100	--	1.0000

3.4 Verification of Limit State EQU

Required by NEN-EN 1997-1 section 2.4.7 / 2.4.8: Ed <= Cd.
Rigid superstructure, verify total load on all piles with total bearing capacity

Fc;d = 6604.000 [kN]
Rc;d = 17427.252 [kN]

The requirements of limit state EQU are met, limit state EQU is ok.

Note: Negative skin friction plays NO part in Limit State EQU. Its influence is incorporated in the tests for Limit State GEO and the Serviceability limit state. The intermediate results provide a full overview of all values that are calculated for the negative skin friction.
Purely indicative, the values for the negative skin friction vary from 118 [kN] to 127 [kN] per pile.

3.5 Verification of Limit State GEO

Required by NEN-EN 1997-1:2005 paragraaf 2.4.9; NEN 9097-1: Sd <= Sreq.

Sd = 0.027 [m]
Sreq = 0.150 [m]

The settlement requirements of limit state GEO are met, this is ok.

As the superstructure was indicated to be rigid, settlement differences may be neglected, so rotations are not taken into consideration (NEN EN 1997 1:2005 par. 6.6.2: NEN 9097-1 part c)!

3.6 Verification of Serviceability limit state

Required by NEN-EN 1997-1:2005 paragraaf 2.4.9; NEN 9097-1: Sd <= Sreq.
For houses, the requirement is : Sreq = 0.05 m. For other types of superstructures a different (well considered) requirement can be specified.

Sd = 0.020 [m]
Sreq = 0.150 [m]

The settlement requirements of the Serviceability Limit State are met, this is ok.

As the superstructure was indicated to be rigid, settlement differences may be neglected, so rotations are not taken into consideration (NEN EN 1997 1:2005 par. 6.6.2: NEN 9097-1 part c)!

3.7 Additional Information

The design values of the maximum shaft tensions (calculated at the transition of positive to negative skin friction) are

At Limit state EQU, GEO :sigma = 4.95 [N/mm2]
At Serviceability Limit Statesigma = 3.83 [N/mm2]

The maximum settlement was found at :
Limit state GEO

CPT name	DKM428
Pile name:	7

Components of the maximum settlement are :

sneg =	0.000 [m]
sb =	0.002 [m]
sel;d =	0.004 [m]
s2 =	0.023 [m]

Serviceability Limit State

CPT name	DKM428
Pile name:	7

Components of the maximum settlement are :

sneg =	0.000 [m]

sb = 0.001 [m]
sel;d = 0.003 [m]
s2 = 0.018 [m]

sneg stands for the settlement due to negative skin friction when the expected ground level settlement (egls) is within the next boundaries : 0.02 <= egls <= 0.10 meter.

For expected ground level settlement beyond the boundaries, sneg = 0.

3.7.1 The bearing capacity of shaft and point at Limit state GEO

name CPT	Bearing Cap. Shaft [kN] Rs;d	Bearing Cap. Point [kN] Rb;d	Bearing Cap. Total [kN]
DKM428	1136.166	981.897	2118.063
DKM430	1012.161	1226.590	2238.751

3.7.2 The bearing capacity of shaft and point at the Serviceability Limit State

name CPT	Bearing Cap. Shaft [kN] Rs;d	Bearing Cap. Point [kN] Rb;d	Bearing Cap. Total [kN]
DKM428	1363.399	1178.276	2541.675
DKM430	1214.593	1471.908	2686.501

End of Report

Report for D-Foundations 8.1

Design and Verification according to Eurocode 7 of Bearing/Tension Piles and Shallow Foundations
Developed by Deltares

Company:	BAM Infraconsult
Date of report:	15-7-2013
Time of report:	12:42:45
Date of calculation:	15-7-2013
Time of calculation:	12:42:38
Filename:	D:\..\berekeningen\Dfoundations\trek\Mast 133_DKM428-430 TREK DO
Project identification:	
	D-Foundations Mast 133_DKM428-430 TREK DO

1 Table of Contents

1 Table of Contents 2
2 Input Data 3
2.1 General Input Data 3
2.2 General Report Data 3
2.3 Application Area Model Tension Piles (NEN-EN) 3
2.4 General CPT Data 3
2.4.1 View of CPT's in Foundation Plan 3
2.5 Soil Data 4
2.5.1 Soil Profile DKM428 4
2.5.2 Soil Profile DKM430 5
2.6 Pile Types 5
2.6.1 Pile type : Rect 450x450 6
2.7 Foundation Plan 6
2.7.1 View of Foundation Plan 6
2.8 Excavation Data 7
2.9 Optional Parameters 7
2.10 Overruled Parameters 7
2.11 Calculation Options 7
2.12 Model Options 7
3 Tension Piles (EC7-NL): Bearing capacity at fixed pile tip levels 8
3.1 Errors and Warnings 8
3.2 Remarks 8
3.3 Calculation Parameters 8
3.3.1 Pile Factors 8
3.3.2 Pile type : Rect 450x450 8
3.4 Results for all CPT's 8
3.4.1 Results for pile type : Rect 450x450 8
3.4.1.1 Pile group 1 8
3.4.1.2 Pile group 2 8
3.4.1.3 Pile group 3 9
3.4.1.4 Pile group 4 9
3.5 INDICATIVE: Results using Ksl3 9
3.5.1 Results for pile type : Rect 450x450 9
3.5.1.1 Pile group 1 9
3.5.1.2 Pile group 2 9
3.5.1.3 Pile group 3 10
3.5.1.4 Pile group 4 10

2 Input Data

2.1 General Input Data

Model	Tension Piles (EC7-NL)

2.2 General Report Data

Geotechnical consultant :	
Design engineer superstructure :	
Principal :	
Title 1 :	
Title 2 :	
Title 3 :	D-Foundations Mast 133_DKM428-430 TREK DO
Number of project :	-
Location of project :	

2.3 Application Area Model Tension Piles (NEN-EN)

The design and verifications performed by the TENSION PILES (NEN-EN) model of D-FOUNDATIONS concern pile foundations on which axial static or quasi-static loads cause tensile forces in the piles. Pilegroup effects are taken into account. Calculation of pile forces is based on Cone Penetration Tests. Pile capacities are based on the NEN-EN 1997-1, chapter 7 and where pile/safety factors are concerned, on Dutch Standards NEN-EN 1997-1. Horizontal displacements of piles are not taken into account. Vertical displacements of piles are not calculated. Design of Tension piles based on NEN-EN 1997-1 is limited to piles with lengths between 7 and 50 m and a minimum Length over (equivalent) diameter ratio of 13.5.

2.4 General CPT Data

Number of CPT's :	2
Timing of CPT's :	CPT - Excavation - Install

2.4.1 View of CPT's in Foundation Plan

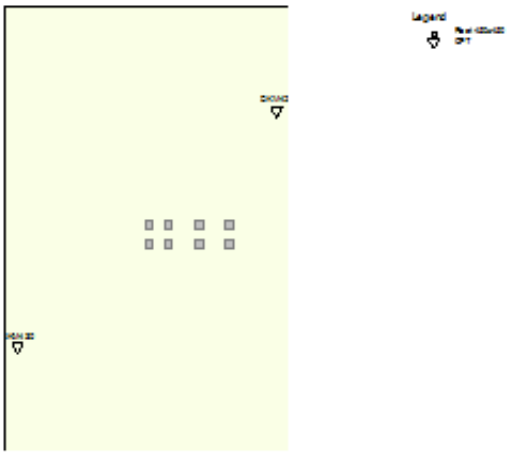

Number/name CPT	X-coordinate [m]	Y-coordinate [m]
1: DKM428	99583.01	459853.26
2: DKM430	99566.81	459838.51

2.5 Soil Data

Number of soil profiles (= number of CPT's) : 2

2.5.1 Soil Profile DKM428

Belonging to CPT	DKM428
Surface level in [m. reference level] :	-1.580
Phreatic level in [m. reference level] :	-2.180
Top of tension zone [m. reference level]:	-12.100
Pile tip level in [m. reference level] :	-21.500
Number of layers in profile :	6

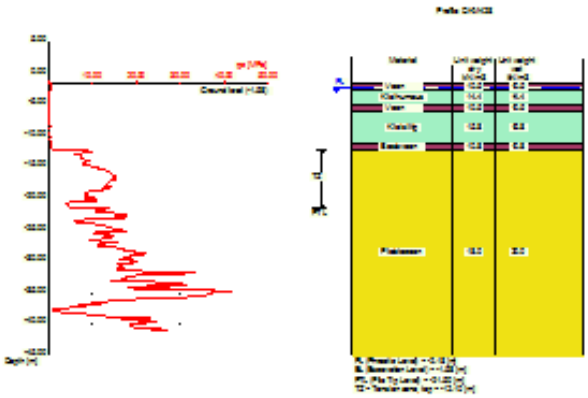

Number layer	Top layer [m R.L.]	Soil Type	Gamma [kN/m3]	Gamma sat [kN/m3]	Min. Void Ratio [%]	Max. Void Ratio [%]	Median [mm]	Max. Cone resistance [kPa]	Use Max. Cone resistance
1	-1.580	Peat	10.50	10.50	0.40	0.80		12/15	Standard
2	-2.700	Clay	14.40	14.40	0.40	0.80		12/15	Standard
3	-5.100	Peat	10.50	10.50	0.40	0.80		12/15	Standard
4	-6.000	Clay	15.80	15.80	0.40	0.80		12/15	Standard
5	-11.200	Peat	10.80	10.80	0.40	0.80		12/15	Standard
6	-12.100	Sand	18.00	20.00	0.40	0.80	0.200	12/15	Standard

Number layer	Top layer [m R.L.]	Soil Type	Phi [deg]	Addit. PP at top [kN/m2]	Addit. PP at bottom [kN/m2]	OCR value [-]	Use Tension
1	-1.580	Peat	15.00	0.00	0.00	1.000	False
2	-2.700	Clay	17.50	0.00	0.00	1.000	True
3	-5.100	Peat	15.00	0.00	0.00	1.000	False
4	-6.000	Clay	27.50	0.00	0.00	1.000	True
5	-11.200	Peat	15.00	0.00	0.00	1.000	False

Number layer	Top layer [m R.L.]	Soil Type	Phi [deg]	Addit. PP at top [kN/m2]	Addit. PP at bottom [kN/m2]	OCR value [-]	Use Tension
6	-12.100	Sand	30.00	0.00	0.00	1.000	True

2.5.2 Soil Profile DKM430

Belonging to CPT	DKM430
Surface level in [m. reference level] :	-1.690
Phreatic level in [m. reference level] :	-2.290
Top of tension zone [m. reference level]:	-12.000
Pile tip level in [m. reference level] :	-21.500
Number of layers in profile :	6

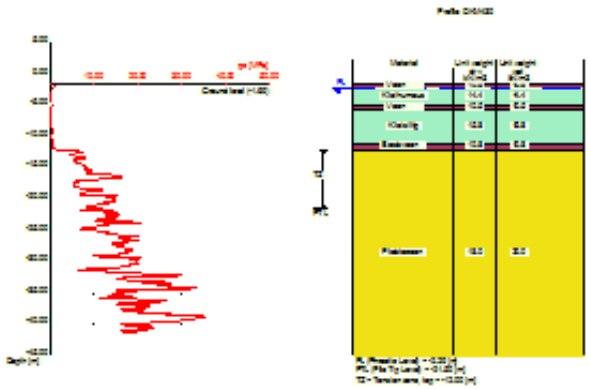

Number layer	Top layer [m R.L.]	Soil Type	Gamma [kN/m3]	Gamma sat [kN/m3]	Min. Void Ratio [%]	Max. Void Ratio [%]	Median [mm]	Max. Cone resistance [kPa]	Use Max. Cone resistance
1	-1.690	Peat	10.50	10.50	0.40	0.80		12/15	Standard
2	-2.200	Clay	14.40	14.40	0.40	0.80		12/15	Standard
3	-4.800	Peat	10.50	10.50	0.40	0.80		12/15	Standard
4	-5.500	Clay	15.80	15.80	0.40	0.80		12/15	Standard
5	-11.100	Peat	10.80	10.80	0.40	0.80		12/15	Standard
6	-12.000	Sand	18.00	20.00	0.40	0.80	0.200	12/15	Standard

Number layer	Top layer [m R.L.]	Soil Type	Phi [deg]	Addit. PP at top [kN/m2]	Addit. PP at bottom [kN/m2]	OCR value [-]	Use Tension
1	-1.690	Peat	15.00	0.00	0.00	1.000	False
2	-2.200	Clay	17.50	0.00	0.00	1.000	True
3	-4.800	Peat	15.00	0.00	0.00	1.000	False
4	-5.500	Clay	27.50	0.00	0.00	1.000	True
5	-11.100	Peat	15.00	0.00	0.00	1.000	False
6	-12.000	Sand	30.00	0.00	0.00	1.000	True

2.6 Pile Types

Note : If alpha;t is not user defined, the next rules apply :
- alpha;t according to table 7.g and table 7.h of NEN 9097-1

- for clay: alpha;t depends on the CPT-value and relative depth
- for peat: alpha;t = 0
- for sand/gravel: alpha;t also depends on the median

Number of pile types : 1

2.6.1 Pile type : Rect 450x450

Pile type for shaft friction factor (alpha;t) sand/gravel/loam :	Driven straight-sided precast concrete pile
Pile type for shaft friction factor (alpha;t) clay :	According to standard
Material/type for pile :	Concrete
Pile shape :	Rectangular pile
Pile dimensions :	
Smallest side pile tip [m] :	0.450
Largest side pile tip [m] :	0.450

2.7 Foundation Plan

Number of piles : 8
Number of collaborating piles* : 8
* : 0 = not defined, 1 = non rigid superstructure, >1 = rigid superstructure

2.7.1 View of Foundation Plan

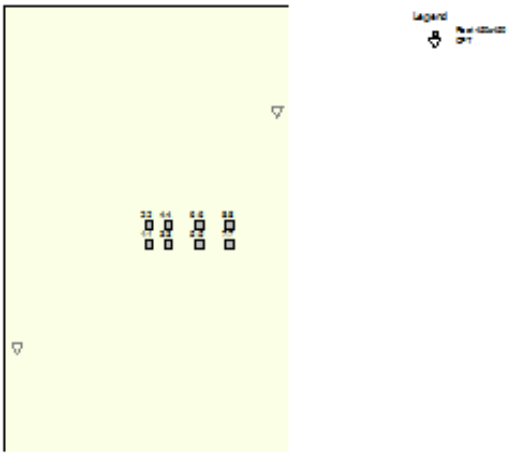

Pile nr./code	X-coordinate [m]	Y-coordinate [m]	Maximum load [kN]	Minimum load [kN]	Pile head level [m R.L.]	Use alternat. loads	Factor Gamma;var
1: 1:1	99575.00	459845.00	199.00	-581.00	-1.69	True	1.50
2: 2:2	99575.00	459846.20	199.00	-581.00	-1.69	True	1.50
3: 3:3	99576.20	459845.00	209.00	-596.00	-1.69	True	1.50
4: 4:4	99576.20	459846.20	209.00	-596.00	-1.69	True	1.50
5: 5:5	99578.10	459845.00	221.00	-620.00	-1.69	True	1.50
6: 6:6	99578.10	459846.20	221.00	-620.00	-1.69	True	1.50
7: 7:7	99580.00	459845.00	236.00	-648.00	-1.69	True	1.50
8: 8:8	99580.00	459846.20	236.00	-648.00	-1.69	True	1.50

Note regarding the loads: tension forces are positive, compressive forces are negative

2.8 Excavation Data

Excavation level in [m. reference level] :	-1.580
Reduction model :	Safe (NEN)

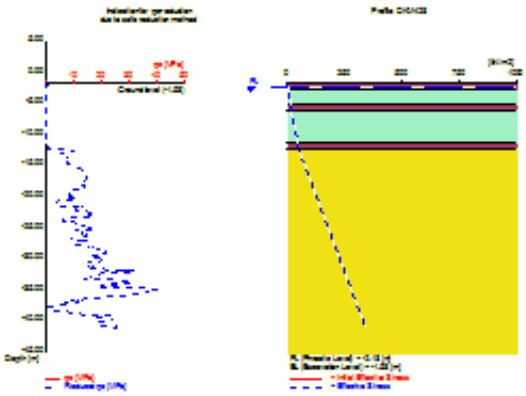

2.9 Optional Parameters

Unit weight water [kN/m3] :	9.81
Surcharge [kN/m2] :	0.00

2.10 Overruled Parameters

User defined Factor xi3 [-] :	1.20
User defined Factor xi4 [-] :	0.96

2.11 Calculation Options

Suppress compaction
If compaction is used, according to NEN 9097-1 CPT's should be made after installation to verify this assumption
Suppress the influence of excavations.
Use excess pore pressure

2.12 Model Options

Selected pile types :
-Rect 450x450

Selected profiles :
-DKM428
-DKM430

3 Tension Piles (EC7-NL): Bearing capacity at fixed pile tip levels

3.1 Errors and Warnings

Warning : The factor xi3 (NEN-EN 1997 1:2005 NEN 9097-1, annex A) is user defined. Is user defined. Evidence to support this from the NEN deviating value has to be provided.
Warning : The factor xi4 (NEN-EN 1997 1:2005 NEN 9097-1, annex A) is user defined. Is user defined. Evidence to support this from the NEN deviating value has to be provided.

3.2 Remarks

When calculating the max. mobilized soil weight, the topangle is used according to NEN 9097-1.

3.3 Calculation Parameters

3.3.1 Pile Factors

xi3 (user defined) :	1.20
xi4 (user defined) :	0.96
For factor gamma;var values, see FOUNDATION PLAN table	
Factor gamma;st according to NEN 1997-1 annex A.3.3.2 [-]	1.350
Factor gamma;gamma according to NEN-EN 1997-1 annex A.3 table A2 [-]	
Above excavation level	1.0
Below excavation level	1.1

3.3.2 Pile type : Rect 450x450

Pile type for shaft friction factor (alpha;t) sand/gravel/loam :	Driven straight-sided precast concrete pile
Pile type for shaft friction factor (alpha;t) clay :	According to standard
Materialtype for pile :	Concrete
Pile shape :	Rectangular pile
Pile dimensions :	
Smallest side pile tip [m] :	0.450
Largest side pile tip [m] :	0.450

3.4 Results for all CPT's

3.4.1 Results for pile type : Rect 450x450

3.4.1.1 Pile group 1

Number of piles belonging to this pile group : 2
Names of piles belonging to this pile group
1:1
2:2

Level [m R.L.]	Rt;d min [kN]	Rt;d avg [kN]	Rt;d [kN]	Ksi used [-]
-21.50	352.73	315.80	315.80	Ksi3

3.4.1.2 Pile group 2

Number of piles belonging to this pile group : 2
Names of piles belonging to this pile group
3:3
4:4

Level [m R.L.]	Rt;d min [kN]	Rt;d avg [kN]	Rt;d [kN]	Ksi used [-]
-21.50	308.38	281.79	281.79	Ksi3

3.4.1.3 Pile group 3

Number of piles belonging to this pile group : 2
Names of piles belonging to this pile group
5:5
6:6

Level [m R.L.]	Rt;d min [kN]	Rt;d avg [kN]	Rt;d [kN]	Ksi used [-]
-21.50	360.52	325.39	325.39	Ksi3

3.4.1.4 Pile group 4

Number of piles belonging to this pile group : 2
Names of piles belonging to this pile group
7:7
8:8

Level [m R.L.]	Rt;d min [kN]	Rt;d avg [kN]	Rt;d [kN]	Ksi used [-]
-21.50	404.87	359.40	359.40	Ksi3

3.5 INDICATIVE: Results using Ksi3

3.5.1 Results for pile type : Rect 450x450

3.5.1.1 Pile group 1

Number of piles belonging to this pile group : 2
Names of piles belonging to this pile group
1:1
2:2

CPT name	Level [m R.L.]	Rt;d indicative [kN]	Max. mobilized soil weight [kN]	Pile weight [kN]	Tension derived from clay [%]
DKM428	-21.50	322.64	4265.61	49.15	0.00
DKM430	-21.50	308.96	4623.72	49.36	0.00

CPT name	Alpha t aver. overall	Alpha t aver. sand/gravel/loam	Alpha t aver. clay/peat
DKM428	0.0070	0.0070	0.0000
DKM430	0.0070	0.0070	0.0000

3.5.1.2 Pile group 2

Number of piles belonging to this pile group : 2
Names of piles belonging to this pile group
3:3
4:4

CPT name	Level [m R.L.]	Rt;d indicative [kN]	Max. mobilized soil weight [kN]	Pile weight [kN]	Tension derived from clay [%]
DKM428	-21.50	283.87	1363.76	49.15	0.00
DKM430	-21.50	279.70	1461.80	49.36	0.00

CPT name	Alpha t aver. overall	Alpha t aver. sand/gravel/loam	Alpha t aver. clay/peat
DKM428	0.0070	0.0070	0.0000
DKM430	0.0070	0.0070	0.0000

3.5.1.3 Pile group 3

Number of piles belonging to this pile group : 2
Names of piles belonging to this pile group
5:5
6:6

CPT name	Level [m R.L.]	Rt;d indicative [kN]	Max. mobilized soil weight [kN]	Pile weight [kN]	Tension derived from clay [%]
DKM428	-21.50	329.59	1480.63	49.15	0.00
DKM430	-21.50	321.19	1582.52	49.36	0.00

CPT name	Alpha t aver. overall	Alpha t aver. sand/gravel/loam	Alpha t aver. clay/peat
DKM428	0.0070	0.0070	0.0000
DKM430	0.0070	0.0070	0.0000

3.5.1.4 Pile group 4

Number of piles belonging to this pile group : 2
Names of piles belonging to this pile group
7:7
8:8

CPT name	Level [m R.L.]	Rt;d indicative [kN]	Max. mobilized soil weight [kN]	Pile weight [kN]	Tension derived from clay [%]
DKM428	-21.50	368.36	4382.49	49.15	0.00
DKM430	-21.50	350.45	4744.44	49.36	0.00

CPT name	Alpha t aver. overall	Alpha t aver. sand/gravel/loam	Alpha t aver. clay/peat
DKM428	0.0070	0.0070	0.0000
DKM430	0.0070	0.0070	0.0000

End of Report

BIJLAGE 4 BEREKENING HORIZONTALE BEDDINGSCONSTANTEN

bam infra
BAM Infraconsult bv

Horizontale beddingsconstante paal volgens Menard
Auteur: Vincent Bosch
Versie: Augustus 2010
Ref: CUR 228 - Ontwerprichtlijn door grond horizontaal belaste palen

Adviseur	Robert Meeuwsen
Datum	15-07-13
Project	Tennet A380 Noordring
Locatie	Mast 133 (x-richting)

Sondering	DKM428
D_{eq}	0.51 m

b.k. laag [m+ NAP]	soort	q_c [MPa]	β [-]	E_p [kPa]	α [-]	$k_{h\ R>0.3}$ [kN/m³]	$k_{h\ R<0.3}$ [kN/m³]	**$k_{h,gem}$ [kN/m³]**	**corr. factor *)**	Voor ESA berekeningen per m² paal $k_{h,rep,laag}$ [kN/m³]	per m² paal $k_{h,rep,hoog}$ [kN/m³]	per m'paal $k_{h,rep,laag}$ [kN/m/m]	per m'paal $k_{h,rep,hoog}$ [kN/m/m]
-1.6	Veen	0.5	3.00	1,500	1.00	3970	3893	**3893**	**0.54**	1,400	3,200	700	1,600
-2.7	Klei	0.2	2.00	400	0.67	1428	1461	**1461**	**0.54**	500	1,200	300	600
-5.1	Veen	0.5	3.00	1,500	1.00	3970	3893	**3893**	**0.54**	1,400	3,200	700	1,600
-6.0	Klei	0.3	2.00	600	0.67	2142	2192	**2192**	**0.54**	800	1,800	400	900
-11.2	Veen	0.5	3.00	1,500	1.00	3970	3893	**3893**	**0.54**	1,400	3,200	700	1,600
-12.1	Zand	10.0	0.70	7,000	0.33	35221	37804	**37804**	**0.54**	13,600	30,600	6,900	15,600
-22.0	Zand	12.0	0.70	8,400	0.33	42265	45364	**45364**	**0.54**	16,300	36,700	8,300	18,700

*) In geval van dynamische belastingen: beddingsconstanten vergroten met een factor 3
In geval van kleine h.o.h. afstanden: beddingsconstanten reduceren met groepsfactor

Reductiefactoren Horizontale beddingsconstante palen door groepswerking

vlg. Reese en van Impe ('Single Piles and Pile Groups under Lateral Loading')

Deq	0.51	m
dx	1.2	m
dy	1.2	m

Paal:	X	Y	L= Leading	Paalnummer								
	[m]	[m]	T = Trailing	1	2	3	4	5	6	7	8	9
1	0	0	L	1.00	0.86	1.00	1.00	1.00	1.00	1.00	1.00	1.00
2	1.2	0	L	0.86	1.00	0.86	1.00	1.00	1.00	1.00	1.00	1.00
3	2.4	0	L	1.00	0.86	1.00	0.86	1.00	1.00	1.00	1.00	1.00
4	3.6	0	L	1.00	1.00	0.86	1.00	1.00	1.00	1.00	1.00	1.00
5	100	0	L	1.00	1.00	1.00	1.00	1.00	0.86	1.00	1.00	1.00
6	101	0	L	1.00	1.00	1.00	1.00	0.86	1.00	0.86	1.00	1.00
7	102	0	L	1.00	1.00	1.00	1.00	1.00	0.86	1.00	0.86	1.00
8	104	0	L	1.00	1.00	1.00	1.00	1.00	1.00	0.86	1.00	0.86
9	105	0	L	1.00	1.00	1.00	1.00	1.00	1.00	1.00	0.86	1.00
10	0	1.2	T	0.87	0.96	1.00	1.00	1.00	1.00	1.00	1.00	1.00
11	1.2	1.2	T	0.96	0.87	0.96	1.00	1.00	1.00	1.00	1.00	1.00
12	2.4	1.2	T	1.00	0.96	0.87	0.96	1.00	1.00	1.00	1.00	1.00
13	3.6	1.2	T	1.00	1.00	0.96	0.87	1.00	1.00	1.00	1.00	1.00
14	100	1.2	T	1.00	1.00	1.00	1.00	0.87	0.96	1.00	1.00	1.00
15	101	1.2	T	1.00	1.00	1.00	1.00	0.96	0.87	0.96	1.00	1.00
16	102	1.2	T	1.00	1.00	1.00	1.00	1.00	0.96	0.87	0.96	1.00
17	104	1.2	T	1.00	1.00	1.00	1.00	1.00	1.00	0.96	0.87	0.96
18	105	1.2	T	1.00	1.00	1.00	1.00	1.00	1.00	1.00	0.96	0.87
			redfactor:	**0.72**	**0.59**	**0.59**	**0.72**	**0.72**	**0.59**	**0.59**	**0.59**	**0.72**

				Paalnummer								
				10	11	12	13	14	15	16	17	18
1			L	0.66	0.87	0.98	1.00	1.00	1.00	1.00	1.00	1.00
2			L	0.87	0.66	0.87	0.98	1.00	1.00	1.00	1.00	1.00
3			L	0.98	0.87	0.66	0.87	1.00	1.00	1.00	1.00	1.00
4			L	1.00	0.98	0.87	0.66	1.00	1.00	1.00	1.00	1.00
5			L	1.00	1.00	1.00	1.00	0.66	0.87	0.98	1.00	1.00
6			L	1.00	1.00	1.00	1.00	0.87	0.66	0.87	0.98	1.00
7			L	1.00	1.00	1.00	1.00	0.98	0.87	0.66	0.87	0.98
8			L	1.00	1.00	1.00	1.00	1.00	0.98	0.87	0.66	0.87
9			L	1.00	1.00	1.00	1.00	1.00	1.00	0.98	0.87	0.66
10			T	1.00	0.86	1.00	1.00	1.00	1.00	1.00	1.00	1.00
11			T	0.86	1.00	0.86	1.00	1.00	1.00	1.00	1.00	1.00
12			T	1.00	0.86	1.00	0.86	1.00	1.00	1.00	1.00	1.00
13			T	1.00	1.00	0.86	1.00	1.00	1.00	1.00	1.00	1.00
14			T	1.00	1.00	1.00	1.00	1.00	0.86	1.00	1.00	1.00
15			T	1.00	1.00	1.00	1.00	0.86	1.00	0.86	1.00	1.00
16			T	1.00	1.00	1.00	1.00	1.00	0.86	1.00	0.86	1.00
17			T	1.00	1.00	1.00	1.00	1.00	1.00	0.86	1.00	0.86
18			T	1.00	1.00	1.00	1.00	1.00	1.00	1.00	0.86	1.00
			redfactor:	**0.48**	**0.36**	**0.36**	**0.48**	**0.48**	**0.36**	**0.35**	**0.36**	**0.48**

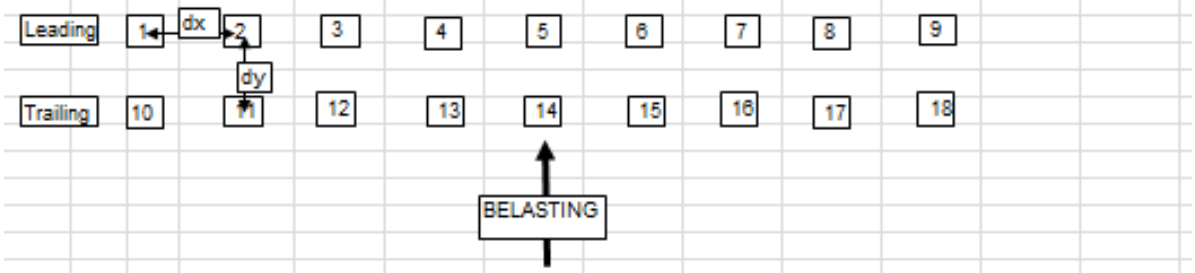

bam infra
BAM Infraconsult bv

Horizontale beddingsconstante paal volgens Menard
Auteur: Vincent Bosch
Versie: Augustus 2010
Ref: CUR 228 - Ontwerprichtlijn door grond horizontaal belaste palen

Adviseur	Robert Meeuwsen
Datum	15-07-13
Project	Tennet A380 Noordring
Locatie	Mast 133 (y-richting)

Sondering	DKM428
D_{eq}	0.51 m

b.k. laag [m+ NAP]	soort	q_c [MPa]	β [-]	E_p [kPa]	α [-]	$k_{h\ R>0.3}$ [kN/m³]	$k_{h\ R<0.3}$ [kN/m³]	**$k_{h,gem}$ [kN/m³]**	**corr. factor *)**	Voor ESA berekeningen per m² paal $k_{h,rep,laag}$ [kN/m³]	per m² paal $k_{h,rep,hoog}$ [kN/m³]	per m'paal $k_{h,rep,laag}$ [kN/m/m]	per m'paal $k_{h,rep,hoog}$ [kN/m/m]
-1.6	Veen	0.5	3.00	1,500	1.00	3970	3893	**3893**	**0.39**	1,000	2,300	500	1,200
-2.7	Klei	0.2	2.00	400	0.67	1428	1461	**1461**	**0.39**	400	900	200	400
-5.1	Veen	0.5	3.00	1,500	1.00	3970	3893	**3893**	**0.39**	1,000	2,300	500	1,200
-6.0	Klei	0.3	2.00	600	0.67	2142	2192	**2192**	**0.39**	600	1,300	300	700
-11.2	Veen	0.5	3.00	1,500	1.00	3970	3893	**3893**	**0.39**	1,000	2,300	500	1,200
-12.1	Zand	10.0	0.70	7,000	0.33	35221	37804	**37804**	**0.39**	9,800	22,100	5,000	11,300
-22.0	Zand	12.0	0.70	8,400	0.33	42265	45364	**45364**	**0.39**	11,800	26,500	6,000	13,500

*) In geval van dynamische belastingen: beddingsconstanten vergroten met een factor 3
In geval van kleine h.o.h. afstanden: beddingsconstanten reduceren met groepsfactor

Reductiefactoren Horizontale beddingsconstante palen door groepswerking

vlg. Reese en van Impe ('Single Piles and Pile Groups under Lateral Loading')

Deq	0.51	m
dx	1.2	m
dy	1.2	m

Paal:	X	Y	L= Leading	Paalnummer								
	[m]	[m]	T = Trailing	1	2	3	4	5	6	7	8	9
1	0	0	L	1.00	0.66	0.86	1.00	1.00	1.00	1.00	1.00	1.00
2	0	1.2	T	0.87	1.00	0.66	0.86	1.00	1.00	1.00	1.00	1.00
3	0	2.4	T	1.00	0.66	1.00	0.66	1.00	1.00	1.00	1.00	1.00
4	0	3.6	T	1.00	0.86	0.66	1.00	1.00	1.00	1.00	1.00	1.00
5	100	100	L	1.00	1.00	1.00	1.00	1.00	0.86	1.00	1.00	1.00
6	101	100	L	1.00	1.00	1.00	1.00	0.86	1.00	1.00	1.00	1.00
7	102	0	L	1.00	1.00	1.00	1.00	1.00	1.00	1.00	0.86	1.00
8	104	0	L	1.00	1.00	1.00	1.00	1.00	1.00	0.86	1.00	0.86
9	105	0	L	1.00	1.00	1.00	1.00	1.00	1.00	1.00	0.86	1.00
10	1.2	0	L	0.86	0.87	0.92	1.00	1.00	1.00	1.00	1.00	1.00
11	1.2	1.2	T	0.96	0.86	0.87	0.92	1.00	1.00	1.00	1.00	1.00
12	1.2	2.4	T	1.00	0.87	0.86	0.87	1.00	1.00	1.00	1.00	1.00
13	1.2	3.6	T	1.00	0.92	0.87	0.86	1.00	1.00	1.00	1.00	1.00
14	100	101	T	1.00	1.00	1.00	1.00	0.87	0.96	1.00	1.00	1.00
15	101	101	T	1.00	1.00	1.00	1.00	0.96	0.87	1.00	1.00	1.00
16	102	1.2	T	1.00	1.00	1.00	1.00	1.00	1.00	0.87	0.96	1.00
17	104	1.2	T	1.00	1.00	1.00	1.00	1.00	1.00	0.96	0.87	0.96
18	105	1.2	T	1.00	1.00	1.00	1.00	1.00	1.00	1.00	0.96	0.87
			redfactor:	**0.72**	**0.23**	**0.23**	**0.39**	**0.72**	**0.72**	**0.72**	**0.59**	**0.72**

				Paalnummer								
				10	11	12	13	14	15	16	17	18
1			L	0.86	0.87	0.92	1.00	1.00	1.00	1.00	1.00	1.00
2			T	0.96	0.86	0.87	0.92	1.00	1.00	1.00	1.00	1.00
3			T	1.00	0.87	0.86	0.87	1.00	1.00	1.00	1.00	1.00
4			T	1.00	0.92	0.87	0.86	1.00	1.00	1.00	1.00	1.00
5			L	1.00	1.00	1.00	1.00	0.66	0.87	1.00	1.00	1.00
6			L	1.00	1.00	1.00	1.00	0.87	0.66	1.00	1.00	1.00
7			L	1.00	1.00	1.00	1.00	1.00	1.00	0.66	0.87	0.98
8			L	1.00	1.00	1.00	1.00	1.00	1.00	0.87	0.66	0.87
9			L	1.00	1.00	1.00	1.00	1.00	1.00	0.98	0.87	0.66
10			L	1.00	0.66	0.86	1.00	1.00	1.00	1.00	1.00	1.00
11			T	0.87	1.00	0.66	0.86	1.00	1.00	1.00	1.00	1.00
12			T	1.00	0.66	1.00	0.66	1.00	1.00	1.00	1.00	1.00
13			T	1.00	0.86	0.66	1.00	1.00	1.00	1.00	1.00	1.00
14			T	1.00	1.00	1.00	1.00	1.00	0.86	1.00	1.00	1.00
15			T	1.00	1.00	1.00	1.00	0.86	1.00	1.00	1.00	1.00
16			T	1.00	1.00	1.00	1.00	1.00	1.00	1.00	0.86	1.00
17			T	1.00	1.00	1.00	1.00	1.00	1.00	0.86	1.00	0.86
18			T	1.00	1.00	1.00	1.00	1.00	1.00	1.00	0.86	1.00
			redfactor:	**0.72**	**0.23**	**0.23**	**0.39**	**0.49**	**0.49**	**0.48**	**0.37**	**0.48**

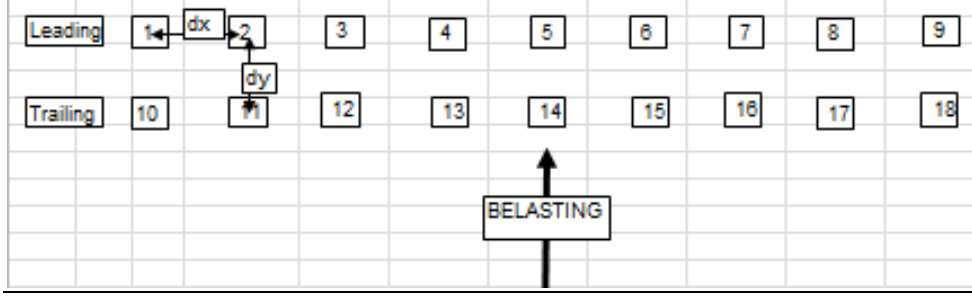

Aan P. de Jager
Kopie aan

Van A. van Noort
Afdeling
Telefoon direct 06-24541757
Fax direct
E-mail a.van.noort@baminfraconsult.nl

Datum 04-02-2014
Referentie R3N-MEM-0012
Blad 1 van 4

Onderwerp **Aanpassing lasten steunmasten**

Algemeen

Bij een aantal steunmasten is het noodzakelijk de ophanging van de lijnen aan te passen. Hierdoor zijn nieuwe berekeningen aangeleverd door TenneT. De belastingen uit de mastfundatie zoals weergegeven in de rapporten van Volker Wessels Telecom zal hier worden beschouwd. Het betreft de volgende masten welke in ons perceel voorkomen:

W2S400+5 rev 02
W4S400Z+14 rev 03
W4S400Z+5 rev 02

De bijbehorende funderingen zijn (o.a.) weergegeven in tabel 1 van rapport R3N-OWR-0033

Masttype	Berekeningsnummer	Fundatietype
W2S400+5	03	A
W2S350+5	09	A
W2S400A+10	27	A
W4S400Z+5	15	B
W2S400+24	21	B
W2S400+22.5	23	B
W4S400Z+14	24	B
W2H400+5	08	C
W2H400A+5 (mast 74)	08A	C
W2H400+10	17	C
W2H400+10 (mast 82)	17A	C
W2H400+15	22	C
W4H400Z+5	14	D
W4H400ZA+5	25	D
W4H400ZA+10 (Aftakm ast m ast 92)	26	D
W2E350+5	05	F
W2E400	07	F
W2E350	10	F

Tabel 1 Overzicht masttypen met bijhorende berekeningsnummer en fundatietype

Het verschil tussen fundatie A en B is de vorm van de opstort. Deze is bij type A kleiner vanwege de kleiner mastdiameter op deze fundatie. Voor groep A is W2S400+5 de hoogst belaste mast. Binnen groep B is masttype W2S400+22,5 de mast met de hoogste belasting (hieronder weergeven).

Samenvatting Fundatiebelastingen

	B.C. 1 - SLS γ_{eg}=1.0 , γ_q=1.0		B.C. 2 - ULS γ_{eg}=1.2 , γ_q=1.6		B.C. 3 - ULS γ_{eg}=0.9 , γ_q=1.6	
Voetmoment	13982	kNm	20915	kNm	20915	kNm
Dwarskracht	271	kN	412	kN	412	kN
Verticale kracht	514	kN	859	kN	463	kN

Doel van deze memo is beoordeling van de nieuwe belastingen en de mate waarin deze belastingen het DO beïnvloeden.

Beoordeling

De toename in belasting is beperkt. In het bestaande ontwerp zijn de verschillende masten samengevoegd tot groepen welke op een bepaald type fundering worden geplaatst. De nieuwe belastingen zijn vergeleken met de maatgevende belastingen uit mast W2S400+22,5.

W2S400+5 rev 0

Samenvatting Fundatiebelastingen

	B.C. 1 - SLS γ_{eg}=1.0 , γ_q=1.0		B.C. 2 - ULS γ_{eg}=1.2 , γ_q=1.6		B.C. 3 - ULS γ_{eg}=0.9 , γ_q=1.6	
Voetmoment	9979	kNm	14554	kNm	14554	kNm
Dwarskracht	253	kN	374	kN	374	kN
Verticale kracht	471	kN	565	kN	424	kN

W2S400+5 rev 2

Samenvatting Fundatiebelastingen

	B.C. 1 - SLS γ_{eg}=1.0 , γ_q=1.0		B.C. 2 - ULS γ_{eg}=1.2 , γ_q=1.6		B.C. 3 - ULS γ_{eg}=0.9 , γ_q=1.6	
Voetmoment	10160	kNm	14825	kNm	14825	kNm
Dwarskracht	254	kN	376	kN	376	kN
Verticale kracht	451	kN	541	kN	406	kN

W4S400Z+14 rev 2

Samenvatting Fundatiebelastingen

	B.C. 1 - SLS γ_{eg}=1.0 , γ_q=1.0		B.C. 2 - ULS γ_{eg}=1.2 , γ_q=1.6		B.C. 3 - ULS γ_{eg}=0.9 , γ_q=1.6	
Voetmoment	11307	kNm	17113	kNm	17113	kNm
Dwarskracht	251	kN	385	kN	385	kN
Verticale kracht	436	kN	752	kN	392	kN

W4S400Z+14 rev 3

Samenvatting Fundatiebelastingen

	B.C. 1 - SLS γ_{eg}=1.0 , γ_q=1.0		B.C. 2 - ULS γ_{eg}=1.2 , γ_q=1.6		B.C. 3 - ULS γ_{eg}=0.9 , γ_q=1.6	
Voetmoment	11541	kNm	17478	kNm	17478	kNm
Dwarskracht	254	kN	390	kN	390	kN
Verticale kracht	645	kN	769	kN	580	kN

W4S400Z+5 rev 0

Samenvatting Fundatiebelastingen

	B.C. 1 - SLS γ_{eg}=1.0 , γ_q=1.0		B.C. 2 - ULS γ_{eg}=1.2 , γ_q=1.6		B.C. 3 - ULS γ_{eg}=0.9 , γ_q=1.6	
Voetmoment	12395	kNm	17917	kNm	17917	kNm
Dwarskracht	317	kN	463	kN	463	kN
Verticale kracht	494	kN	591	kN	445	kN

W4S400Z+5 rev 2

Samenvatting Fundatiebelastingen

	B.C. 1 - SLS γ_{eg}=1.0 , γ_q=1.0		B.C. 2 - ULS γ_{eg}=1.2 , γ_q=1.6		B.C. 3 - ULS γ_{eg}=0.9 , γ_q=1.6	
Voetmoment	12687	kNm	18351	kNm	18351	kNm
Dwarskracht	320	kN	468	kN	468	kN
Verticale kracht	508	kN	608	kN	457	kN

Onbekende gegevens

De ophanging van de lijnen zal bij alle steunmasten worden aangepast. Op dit moment zijn nog geen berekeningen van alle steunmasten beschikbaar. Van de volgende masten is nog geen aangepaste revisie verstrekt:

Poer type A: W2S350+5
W2S400A+10

Poer type B: W2S400+24
W2S400+22,5

Conclusie

De belasting toename is beperkt.
Mastfundatie A is vergelijkbaar met mastfundatie B. De nieuwe lasten zijn lager dan de tot nu toe gehanteerde maatgevende hoogste last voor type A en B. De verwachting is dat ook de lasten van deze nu maatgevende last zullen worden aangepast.
De aangepaste lasten zullen in het UO worden beschouwd.

Bijlage 7

Constructietekening en berekening opstijgpunt

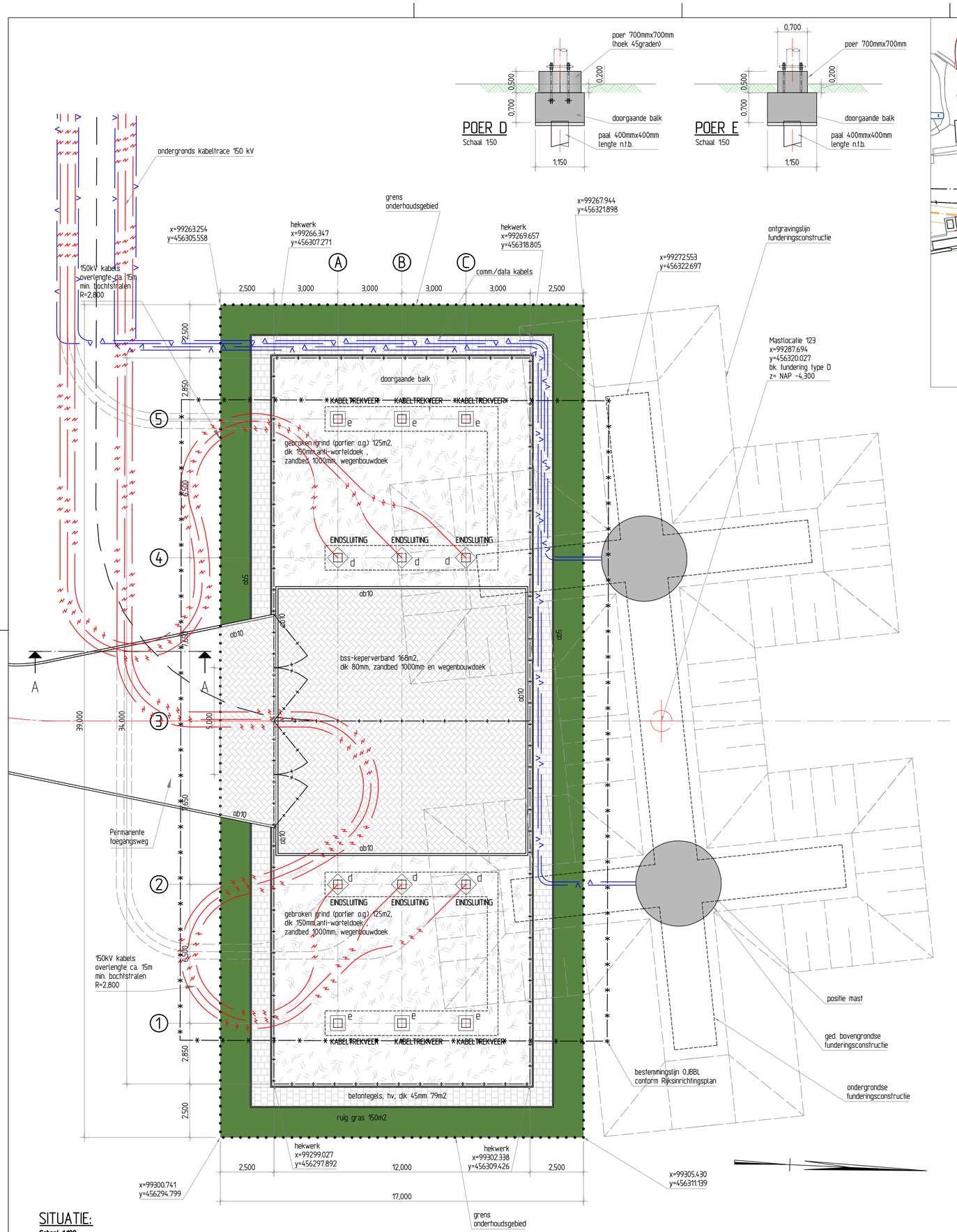

SITUATIE:
Schaal 1:100

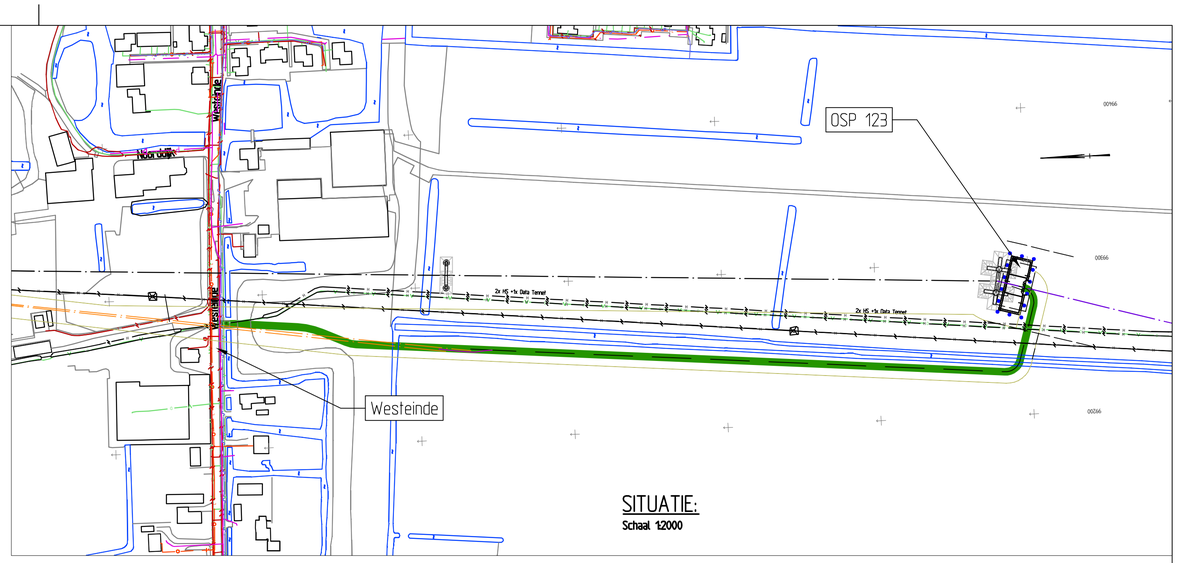

SITUATIE:
Schaal 1:2000

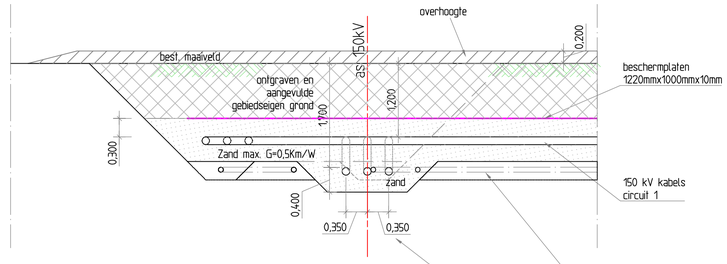

DOORSNEDE A-A
direct na aanvullen van de sleuf
Schaal 1:50

VERKLARING - ALGEMEEN

- Bestaande topografie
- Waterlijn
- MKP00E 565 — Kadastrale grens en sectie/perceelnummer, uit bestand Kadperc_Bts_Zuid_Ringvaart_13105.DWG (Tennet)
- Plangrens OSP uit rijksinpassingsplan
- As stramienlijnen palenplan
- As toegangsweg
- Toekomstige grens onderhoudsgebied

VERKLARING - LEIDINGWERK:

- Aanbrengen kabel 150 kV, incl. overlengte
- Aanbrengen mantelbuis tbv. glasvezel data/signaalkabel
- Schematische ligging kabel 150 kV zonder overlengte

VERKLARING - CIVIEL:

- Aanbrengen hekwerk, gelast dubbeldraads staalmat
- Aanbrengen grind (porfier o.g.) korrelgrootte 30-40, dikte 150 mm op anti-worteldoek en zandbed
- Aanbrengen betonstraatstenen, keperverband, keiformaat dik 80, op zandbed en doek
- Aanbrengen betontegels 300x300mm, dik 45 mm op zandbed en doek
- Aanbrengen groenstrook met ruig gras
- Aanbrengen zandbed

TOPOGRAFISCH FRAGMENT

Schaal 1:50.000

OPMERKINGEN:

wijzigingen rev 03:
- Minimale buigstralen van de 150 kV kabels zijn aangepast naar 2,80 m.
- Bestemmingsplangrens 0.IBBL, conform Rijksinpassingsplan is weergegeven.
- Ligging secundaire kabels aangepast.
- Hoogteligging bk. mastfundatie mast 123

Combining Knowledge and Experience

bam COFELY FABRICOM GDF SUEZ

Randstad 380kV Noordring

		P. de Jager	E.Duwel
		Controleur	Vrijgegeven door
03	kabels en best.plangrens	31-01-2014	RGJ Caspers
02	zie opmerkingen	04-10-2013	RGJ Caspers
01	diverse	06-08-2013	RGJ Caspers
Rev.	Wijziging	Datum	Naam

Omschrijving: Ondergrondse infra
Opstijgpunten
Inrichting OSP bij mast 123

Schaal: 1:50/1:100/1:500 Formaat: A1

Projekt: Randstad 380kV Noordring

Naam: R.G.J. Caspers Datum: 19-07-2013

Tennet Taking power further

Tekeningnummer: R3N-TEK-0041 blad 001

AutoCAD filename:

System:

Ontwerprapport zettingen OSP's

Project:
Randstad 380 kV Noordring

Opdrachtgever:
TenneT TSO

Revisie	Datum	Wijzigingen ten opzichte van vorige revisie
00	10-07-2013	Eerste uitgave
01	6-08-2013	Tekstuele verbeteringen + bijlage 1 aangepast
02	3-10-2013	Aanpassingen t.g.v. nieuwe grondonderzoek, verwerking opmerkingen opdrachtgever
03	05-02-2014	Bijlagen toegevoegd DC

Documentnummer: R3N-OWR-0011

Opsteller	*Controleur*	*Vrijgever*
A. Daddah Adviseur Geotechniek	P. de Jager Ontwerpmanager	Erik Duwel Project Manager

Distributie

Naam	Bedrijf
Extern	
Guido Volman	TenneT TSO
Intern	
Erik Duwel	BAM
Pieter de Jager	BAM
Eric van Rooijen	BAM
Rob Bakker	BAM
Erwin ten Cate	BAM
Michael Desmet	Cofely Fabricom
Hein Pijnappel	Mott MacDonald

Beheer

De documentbeheerder van de combinatie verzorgt de distributie. Alleen houders van een geregistreerde kopie ontvangen automatisch aanvullingen en/of wijzigingen. Het is de verantwoordelijkheid van de houders het document up to date te houden. De laatste versie is altijd beschikbaar in ThinkProject!

Indien documenten worden geprint, geldt het volgende: een geregistreerde kopie is geldig vanaf de datum van uitgifte. Bij uitgifte van een document met een hoger revisienummer verliest de voorgaande versie automatisch haar geldigheid. Kopiehouders dienen het voorblad van een ongeldige versie te markeren met een diagonale lijn samen met de tekst 'vervallen'.

Neem bij twijfel over de geldende versie contact op met de documentbeheerder.

Inhoudsopgave

1. Inleiding 4
2. Uitgangspunten Geotechniek 5
2.1. Algemeen 5
2.2. Bodemopbouw en grondparameters 7
2.3. Programmatuur 8
2.4. Fasering 8
2.5. Bemaling 8
2.6. Berekeningsmethode 9
3. Uitgangspunten hydrologie 10
4. Resultaten zettingen 13
4.1. Resultaten zettingen OSP's 13
4.2. Conclusies en advies 19
5. Monitoring 20
5.1. Zakbaken 20
5.2. Waterspanningsmeters 21
6. Bijlagen 24
Bijlage 1 Geotechnische lengteprofielen 25
Bijlage 2 Resultaten zettingsberekeningen OSP's 26

1. INLEIDING

De komende jaren werken het ministerie van Economische Zaken en TenneT aan de aanleg van een nieuwe 380 kV hoogspanningsverbinding in de Randstad. De nieuwe verbinding stelt de voorziening van elektriciteit in de Randstad veilig.

Het ontwerptracé van de nieuwe Randstad 380 kV verbinding is sinds eind 2008 bekend. De plannen gaan uit van twee ringen, tussen Wateringen en Zoetermeer (de Zuidring) en tussen Zoetermeer en Beverwijk (de Noordring). Eind 2012 heeft Tennet de aanbesteding opgestart voor het gedeelte van de Noordring tussen station Vijfhuizen en Bleiswijk. Het contract is opgedeeld in twee percelen, waarbij de grens ligt bij Zuidelijke Ringvaart. Dit document heeft betrekking op perceel 2 (het zuidelijke gedeelte).

BAM heeft op 8 juli 2013 het contract ondertekend met TenneT voor het ontwerp en realiseren van perceel 2. Het voorliggende document is onderdeel van het Definitief Ontwerp en behandelt de zettingen ter plaatse van de OSP's (opstijgpunten) van Perceel 2.

2. UITGANGSPUNTEN GEOTECHNIEK

In de onderstaande paragrafen zijn de voor het ontwerp relevante uitgangspunten gegeven.

2.1. ALGEMEEN

Voor de uitvoering van de berekening zijn de volgende gegevens en uitgangspunten gehanteerd:

- CUR-publicatie 162 'Construeren met grond'. Civieltechnisch Centrum Uitvoering Research en Regelgeving, november 1992;
- NEN 9997-1: Geotechnisch ontwerp van constructies – Deel 1: Algemene regels, december 2012;
- Situatietekeningen en dwarsprofielen van het ondergrondse tracé;
- Grondonderzoek en laboratoriumonderzoek uitgevoerd door FUGRO. Het grondonderzoek en het laboratoriumonderzoek zijn gedurende verschillende nota's van inlichtingen beschikbaar gesteld;
- De aangehouden geometrie voor de berekeningen is overgenomen uit de dwarsprofielen;
- De berekeningen zijn uitgevoerd met representatieve waarden van de grondparameters conform Paragraaf 2.2;
- Voor zand in het cunet en ophoging zijn de volgende grondparameters conform tabel 2.b van NEN 9997-1 gehanteerd (γ_{nat} = 18 kN/m^3, γ_{sat} = 20 kN/m^3, φ = 32,50, c = 0 kN/m^2);
- De geometrie van de OSP's is conform de tekening met tekeningnummer 32995543-OSZZ-08-E0201, d.d. 31-05-2013;
- Bij de OSP's wordt 1,15 m ontgraven, waarop 1,0 m zand en 0,15 m grind wordt aangebracht;
- De aangebrachte zand in cunet en boven maaiveld dient goed verdicht te worden;
- De zettingen zijn berekend over een periode van 30 jaar;
- De restzettingseis bedraagt 0,10 m in 30 jaar na oplevering (nota van inlichtingen 2 en 12);
- Zettingen zullen de eerste 5 jaar na oplevering worden gemonitord.

Grote delen van Nederland worden gekenmerkt door een langzame, natuurlijke daling van de bodem. De kaart in figuur 1 (bron: www.geofoon.nl) toont de verwachte bodemdaling tot het jaar 2050 t.o.v. 1995 en is opgesteld door RWS, NAM en TNO. In deze kaart zijn de effecten van geologische processen en de gevolgen van menselijke activiteit, zoals peilaanpassingen en aardgaswinning, bij elkaar opgeteld.

De verwachte bodemdaling op de projectlocatie blijkt op de meeste gebieden maximaal 0,10 m in 30 jaar te bedragen. Op gebieden waar een dikke veenlaag aan het oppervlak voorkomt kan de bodemdaling maximaal 0,20 m in 30 jaar bedragen.

Aangezien binnen en buiten de projectlocatie vergelijkbare bodemdaling wordt verwacht, wordt deze voor het verdere ontwerp niet beschouwd.

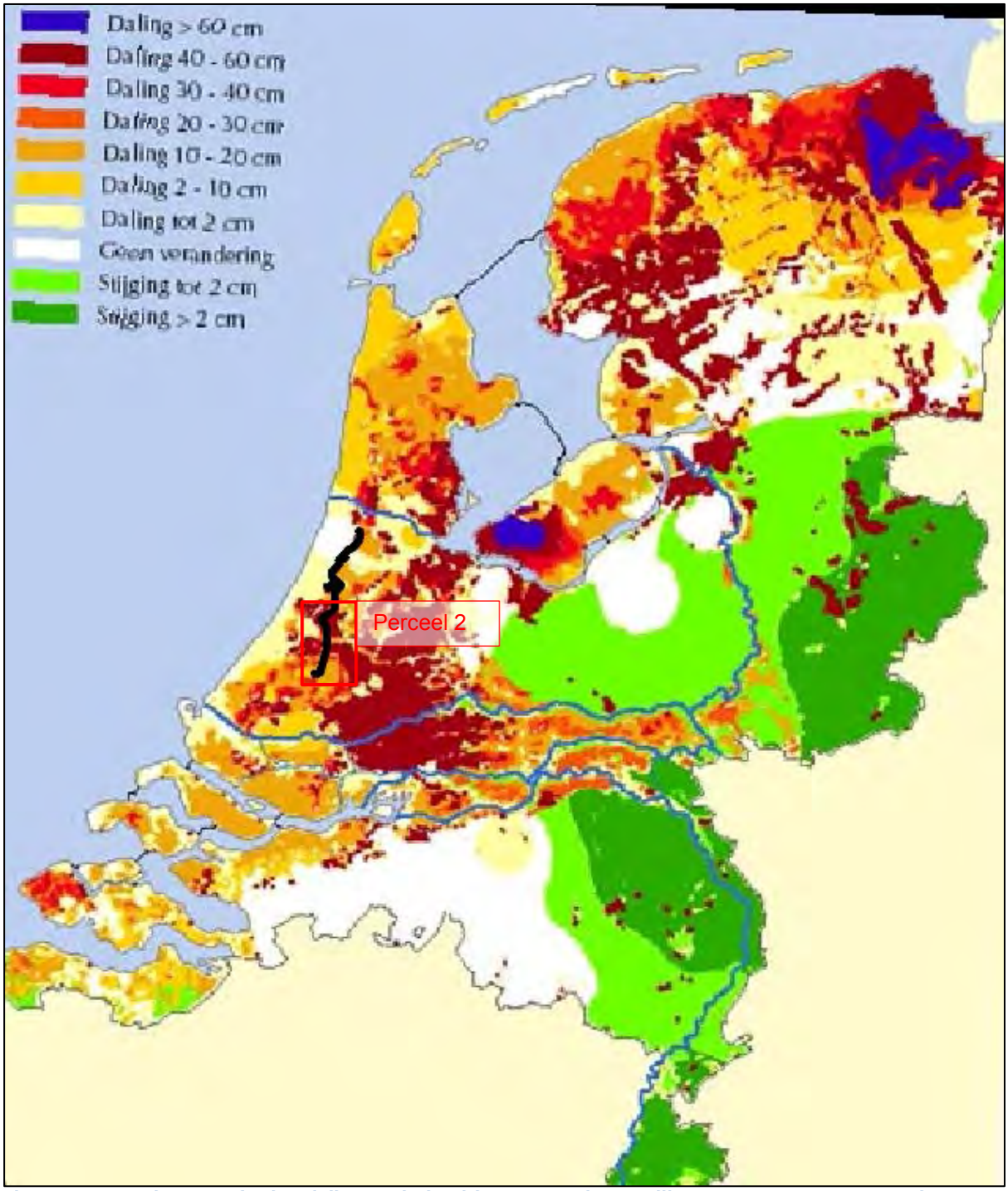

Figuur 1 Kaart algemene bodemdaling Nederland (1995-2050, bron: Rijkswaterstaat, NAM en TNO)

De kaart in figuur 2 toont de ondiepe geologie (toplaag) in het gebied aan (voorkomende grondlagen aan het oppervlak).

Figuur 2 Geologie t.p.v. Perceel 2 (bron: grondwaterkaart van Nederland, grondsoortenkaart Nederland)

Gezien de bodemopbouw wordt eveneens verwacht dat het grootste gedeelte van deze bodemdaling in de diepe holocene lagen (onder ontgravingsniveau) plaats vindt. Hierdoor wordt het aandeel van de algemene bodemdaling in de totale zettingen binnen en buiten het sleuftracé dezelfde. Op basis hiervan is algemene bodemdaling buiten beschouwing gelaten.

Wel zullen een paar meetpunten buiten het invloedsgebied van het tracé worden geplaatst om de bodemdaling te meten.

Beïnvloeding van eventueel aanwezige objecten en leidingen is niet in deze rapportage meegenomen.

2.2. BODEMOPBOUW EN GRONDPARAMETERS

Op basis van het uitgevoerde grondonderzoek zijn geotechnische lengteprofielen opgesteld. Deze zijn in bijlage 1 bijgevoegd.

Op basis van de opgestelde geotechnische lengteprofielen zijn bodemprofielen afgeleid die maatgevend zijn voor subsystemen (definitieve wegen, OSP's en sleuven) in perceel 2. De aangetroffen grondlagen met de gehanteerde laag representatieve waarden van de grondparameters zijn in tabel 1 weergegeven.
De grondparameters zijn gebaseerd op ervaringsgetallen (project verbreding A4 Burgerveen-Leiden, grondparameters aardebaan Noord en Zuid), beschikbare laboratoriumonderzoek en tabel 2.b van NEN

9997-1. De afleiding van de grondparameters uit de laboratoriumonderzoek is in de rapportage R3N-OWR-0043-01 Geotechnisch basisrapport gegeven.

Tabel 1 Aangetroffen grondlagen met de aangehouden laag representatieve waarden van de grondparameters

grondlaag	γ_{nat} [kN/m^3]	γ_{sat} [kN/m^3]	ϕ' [º]	c' [kN/m^2]	c_v [m^2/s]	C'_p [-]	C_p [-]	C'_s [-]	C_s [-]	POP [kN/m^2]
toplaag-A4 (N)	16	16	25	2	4,0E-07	15	65	200	275	10
Toplaag veen	13	13	17,5	2	7,7E-08	6,5	31	16	145	10
zand kleiig-A4 (N)	17,5	19	27,5	0	5,5E-06	200	400	-	-	-
veen-A4 (Z)	10,5	10,5	15	2	3,0E-08	5,7	33,2	22,8	114	10
klei humeus-A4 (N)*	13,2	13,2	18,9	2,6	7,7E-08	6,5	31	16	145	10
klei siltig-A4 (N)*	15,4	15,4	22,4	3,0	9,4E-08	13,8	56,7	89,8	257	10
klei zandig-A4 (N)	17,4	17,4	25	4,3	2,0E-07	28,7	70,6	195,9	321	10
basisveen-A4 (N)	10,8	10,8	15	2	4,7E-08	7,2	51,4	27,6	111	10
pleistoceen-A4 (N)	18	20	32,5	0	-	600	1800	-	-	-

γ_{nat}	representatieve waarde van het volumiek gewicht van de grondlaag met natuurlijke watergehalte
γ_{sat}	representatieve waarde van het volumiek gewicht van de verzadigde grondlaag
φ'	hoek van inwendige wrijving
c'	cohesie
c_v	verticale consolidatiecoëfficiënt
C'_p	primaire samendrukkingsconstante boven de grensspanning
C_p	primaire samendrukkingsconstante onder de grensspanning
C'_s	secundaire samendrukkingsconstante boven de grensspanning
C_s	secundaire samendrukkingsconstante onder de grensspanning
POP	Pre Overburden Pressure (voorconsolidatie spanning)
*	De volumieke gewichten en sterkteparameters van deze lagen zijn uit laboratoriumonderzoek afgeleid (zie rapport R3N-OWR-0043-01 Geotechnisch basisrapport)

2.3. PROGRAMMATUUR

Ten behoeve van de berekeningen is de volgende computerprogramma gebruikt:

- 2-D computerprogramma D-Settlement, versie 9.3 (build 2.2) uitgaande van het model NEN-Koppejan en met het consolidatiemodel Darcy t.b.v. de zettingsberekeningen.

2.4. FASERING

De volgende fasering is aangehouden:

1. verwijderen teelaardelaag
2. ontgraven cunet waar nodig
3. aanbrengen doek (folie) waar nodig
4. plaatsen zakbaken
5. aanvullen cunet met zand en een laag grind
6. na 365 dagen OSP's afwerken

2.5. BEMALING

In de uitvoeringsfase worden de OSP's droog gehouden door middel van sleufbemaling. Waar opbarsten van de bodem wordt verwacht zal een spanningsbemaling in de tussenzandlaag/diepe zandlaag plaats moeten vinden. Dit aspect wordt in de geohydrologische rapportages (R3N-OWR-0039-02 Bemalingsadvies Rijnland en R3N-OWR-0040-02 Bemalingsadvies Schieland) beschouwd.

2.6. BEREKENINGSMETHODE

Ten aanzien van de zettingsberekeningen worden hier de volgende punten aangegeven:

- Zettingen zijn berekend volgens de methode NEN-Koppejan met het consolidatiemodel Darcy;
- Gezien de verwachte zettingen (kleiner dan laagdikte) wordt met lineaire rek gerekend;
- Bij de berekeningen wordt spanningsspreiding volgens de methode Buisman toegepast;
- De berekeningen van de zetting zijn uitgevoerd t.p.v. de maatgevende dwarsprofielen. Waar grote variatie in bodemopbouw aanwezig is, is deze variatie in de profielen verwerkt;
- Bij zettingsberekeningen op basis van laboratoriumonderzoek is het gebruikelijk rekening te houden met een onnauwkeurigheid van ± 30% in de berekende zettingen. Omdat ter plaatse van het tracé geen laboratoriumonderzoek beschikbaar is, is conform CROW publicatie 204 (Betrouwbaarheid van zettingsprognoses) van een onnauwkeurigheid van ± 50% in de berekende zettingen uitgegaan;
- Het modeleren van een grondverbetering (vervangen van een materiaal met een ander) wordt boven water in model als gewichtsverschil aangegeven en onder water als gewichtsverschil + 10 (zie ook D-Settlement manual: ground improvement).

De zettingsanalyse van de OSP's bestaat uit de berekening van een aantal maatgevende dwarsprofielen. De ontgraven cunetten voor de OSP's worden met zand opgevuld en wordt daarna een laag grind aangebracht. Het aangebrachte zand en grind dient goed verdicht te worden.
De geometrie van de OSP is in figuur 3 grafisch weergegeven.

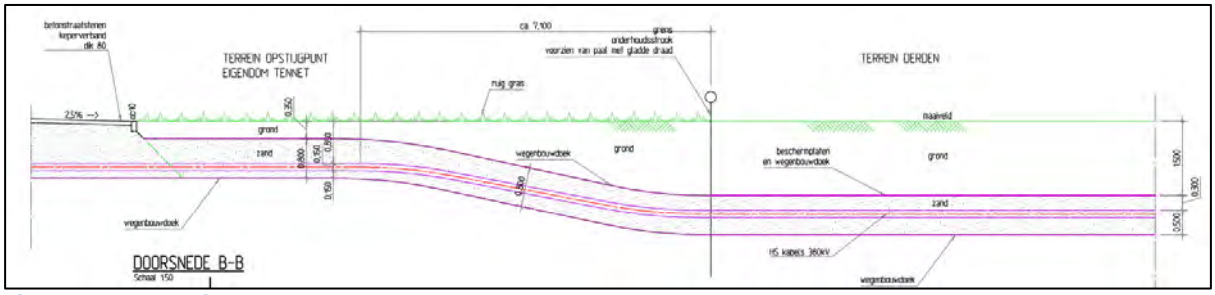

Figuur 3 Geometrie OSP

3. UITGANGSPUNTEN HYDROLOGIE

Een samenvatting van de geohydrologische gegevens (gemiddeld hoogste stijghoogtes en gemiddeld hoogste grondwater) is in tabel 2 weergegeven. Deze gegevens zijn conform de geohydrologische rapporten R3N-OWR-0039-02 Bemalingsadvies Rijnland en R3N-OWR-0040-02 Bemalingsadvies Schieland. De grafische weergaven van de gebieden met daarin aangegeven de geohydrologische gegevens zijn in figuur 4 t/m figuur 7 weergegeven.

Tabel 2 Geohydrologische gegevens

Locatie (SBS code)	Beschrijving	Stijghoogte (GHS)* [m NAP]	Grondwaterstand (GHG)** [m NAP]
OSP154	OSP Provinciale weg	-3,2	-4,5
OSP153	OSP Zuidweg	-3,0	-2,1
OSP YMM-74	OSP Hoogmade	-2,5	-1,7
OSP123	OSP Westeinde	-4,2	-5,1
OSP109	OSP Kruisweg	-5,0	-4,6
*	GHS: Gemiddeld Hoogste Stijghoogte		
**	GHG: Gemiddeld Hoogste Grondwaterstand		

Voor de berekeningen zijn de in tabel 2 weergegeven grondwaterstanden en stijghoogtes gehanteerd.

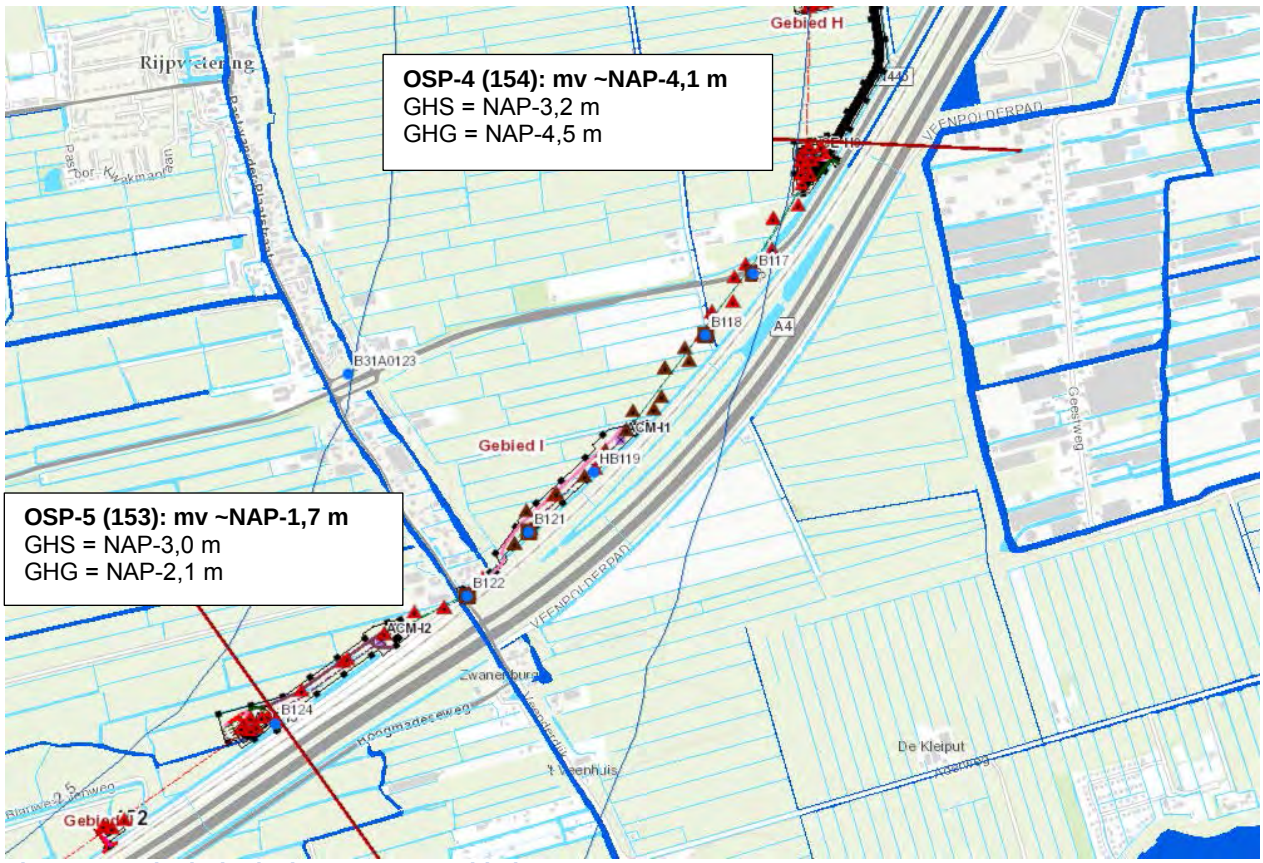

Figuur 4 Geohydrologische gegevens gebieden OSP154 en OSP153

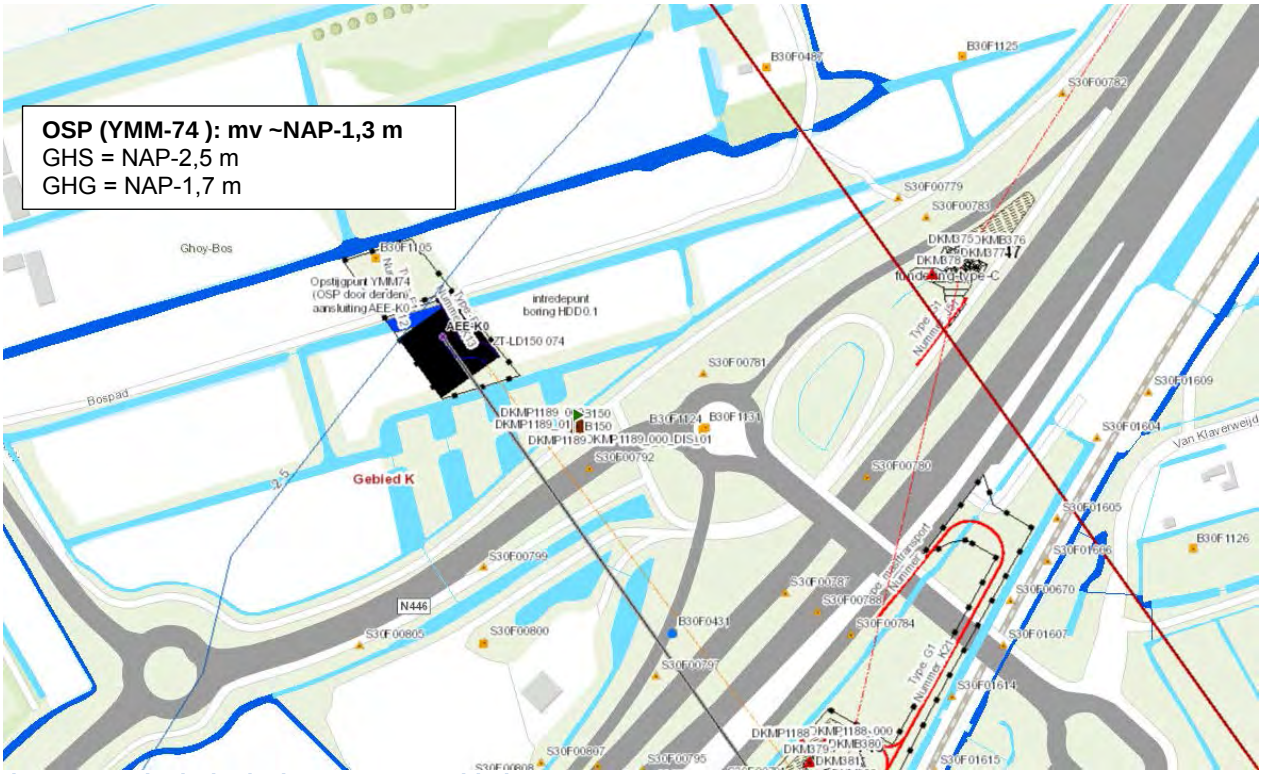

Figuur 5 Geohydrologische gegevens gebied OSP YMM-74

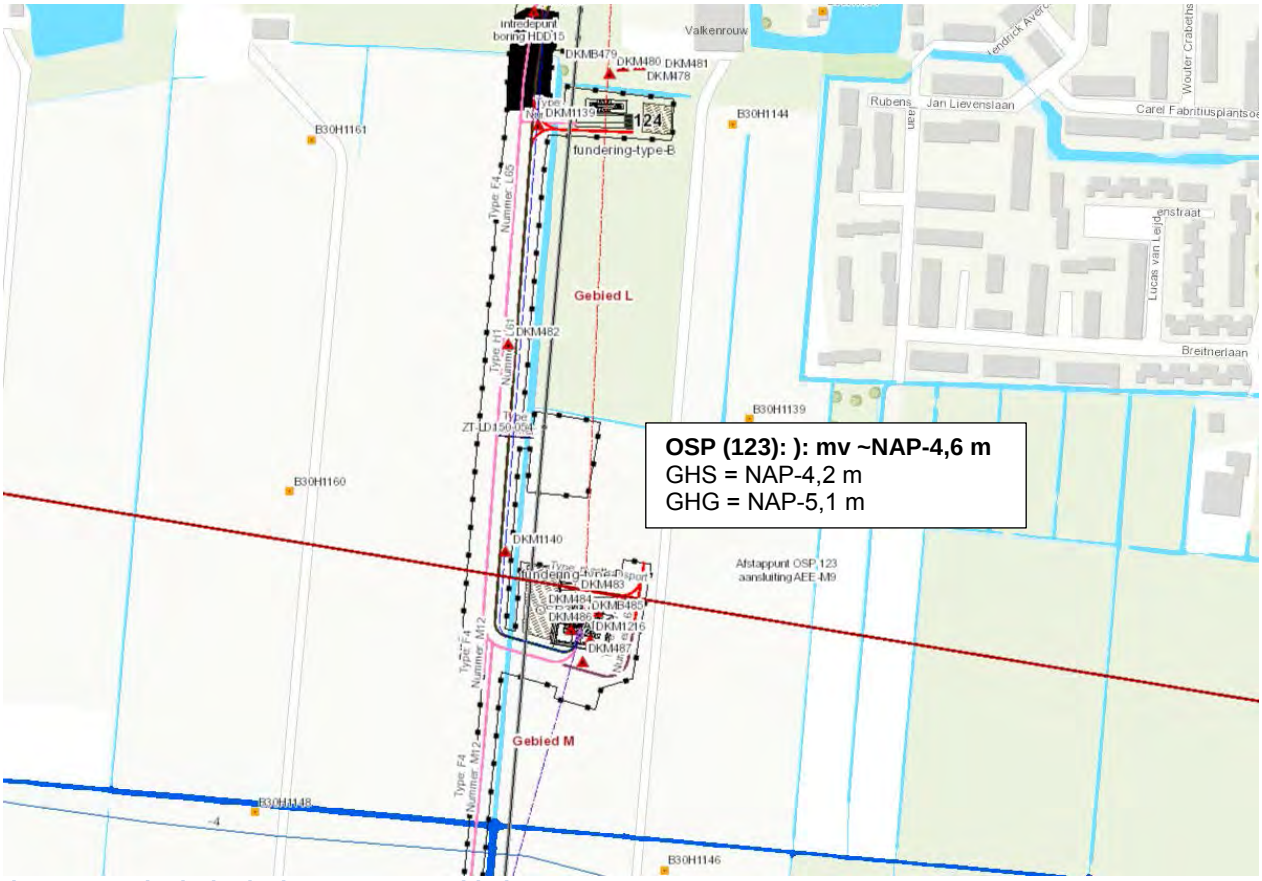

Figuur 6 Geohydrologische gegevens gebied OSP 123

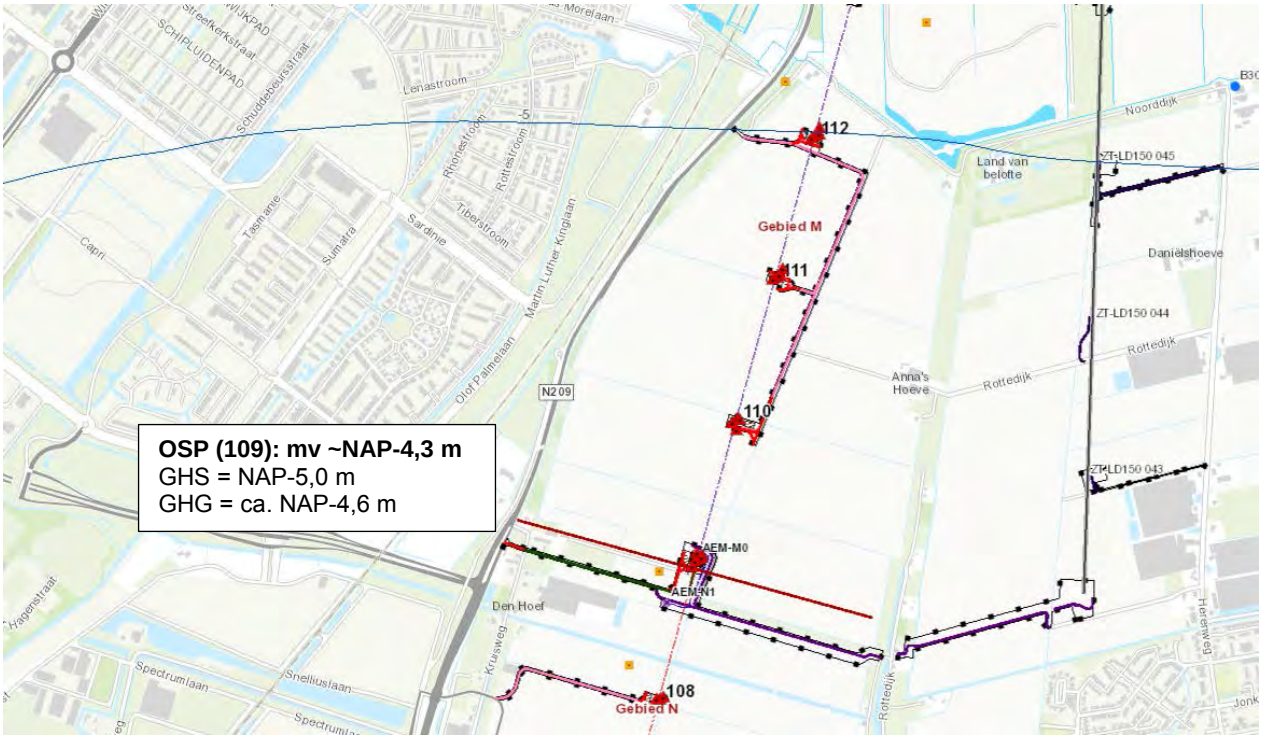

Figuur 7 Geohydrologische gegevens gebied OSP109

4. RESULTATEN ZETTINGEN

4.1. RESULTATEN ZETTINGEN OSP'S

Met inachtneming van de uitgangspunten en de gegevens van voorgaande hoofdstukken zijn zettingsberekeningen uitgevoerd. De zettingsberekeningen zijn gemaakt ter plaatse van de volgende dwarsprofielen:

- Dwarsprofiel bij OSP154;
- Dwarsprofiel bij OSP153 ;
- Dwarsprofiel bij OSP YMM-74;
- Dwarsprofiel bij OSP123;
- Dwarsprofiel bij OSP109.

Het doel van de berekeningen is:

- Het bepalen van de te verwachte zetting;
- Het bepalen van het verloop van de zettingen in de tijd.

Een samenvatting van de berekende zettingen na 30 jaar is in tabel 3 weergegeven. De geometrie van de ophogingen en maatgevende zettingslijnen (midden sleuf of grootste zetting bij variabele profiel) zijn in figuur 8 t/m figuur 17 weergegeven. De totale berekeningsresultaten zijn in bijlage 2 bijgevoegd.

Tabel 3 Resultaten zettingen OSP's

Locatie	Zetting 30 jaar* [m]	Restzetting na 1 jaar bij grootste zetting [m]	Restzetting na 5 jaar bij grootste zetting**** [m]	Toetsing zetting na 5 jaar** bij grootste zetting [%]
OSP 154 (Provinciale weg)***	0,28 à 0,34	0,08	0,07	80 %, restzetting klein dus voldoet
OSP 153 (Zuidweg)***	0,26 à 0,30	0,07	0,07	77 %, restzetting klein dus voldoet
OSP YMM-74 (Hoogmade)***	0,29	0,08	0,07	76 %, restzetting klein dus voldoet
OSP 123 (Westeinde)***	0,11	0,06	0,02	82 %, restzetting klein dus voldoet
OSP 109 (Kruisweg)***	0,07	0,02	0,005	92 %, restzetting klein dus voldoet
*	Aan de rand van de ophoging is de zetting minder. De variabele zetting geldt bij grote OSP's (heterogene ondergrond)			
**	Toetsing zetting: zetting na 5 jaar/eindzetting. Deze dient minimaal 80 % te bedragen			
***	In de berekeningen is uitgegaan dat na een voorbelastingsperiode (bouwperiode) van 1 jaar de ophoging op het huidig maaiveldniveau wordt afgewerkt (overhoogte t.o.v. huidig maaiveld verwijderen)			
****	Zwel bij Darcy duurt erg lang, hetgeen niet helemaal correct is. Verwacht wordt dat zwel snel plaats vindt waardoor de restzetting kleiner zal zijn na 5 jaar			

Uitgaande van een onnauwkeurigheid in de zettingen van 50% worden de volgende eindzettingen gevonden:

- Dwarsprofiel bij OSP154: 0,14 tot 0,17 m à 0,40 tot 0,51 m;
- Dwarsprofiel bij OSP153: 0,13 tot 0,15 m à 0,39 tot 0,45 m;
- Dwarsprofiel bij OSP YMM-74: 0,15 m à 0,44 m;
- Dwarsprofiel bij OSP123: 0,06 m à 0,17 m;
- Dwarsprofiel bij OSP109: 0,04 m à 0,11 m.

Uit de berekeningsresultaten volgen de onderstaande maatregelen:

- OSP154: 0,2 m hoger aanleggen, overhoogte: 1,0 m;
- OSP153: 0,2 m hoger aanleggen, overhoogte: 1,0 m;
- OSP YMM-74: 0,2 m hoger aanleggen, overhoogte: 1,0 m;

- OSP123: overhoogte: 0,10 m ter compensatie van verwachte zetting;
- OSP109: overhoogte: 0,10 m ter compensatie van verwachte zetting.

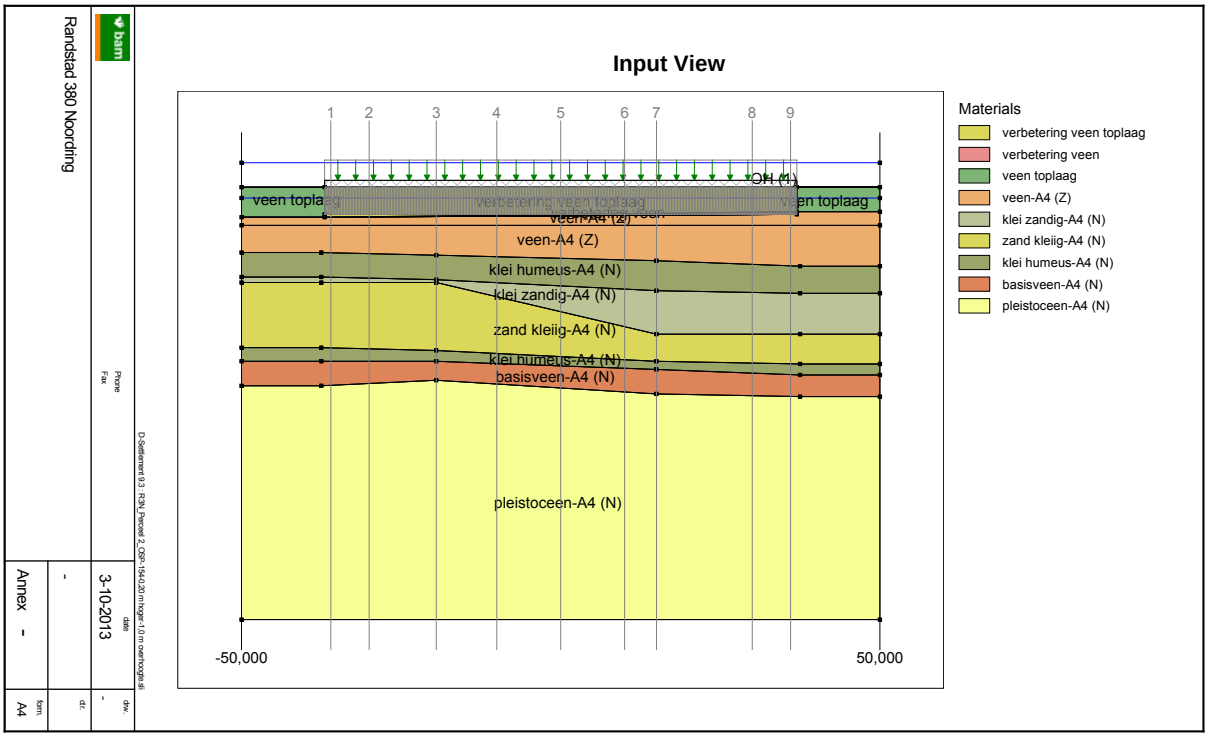

Figuur 8 Geometrie dwarsprofiel OSP 154

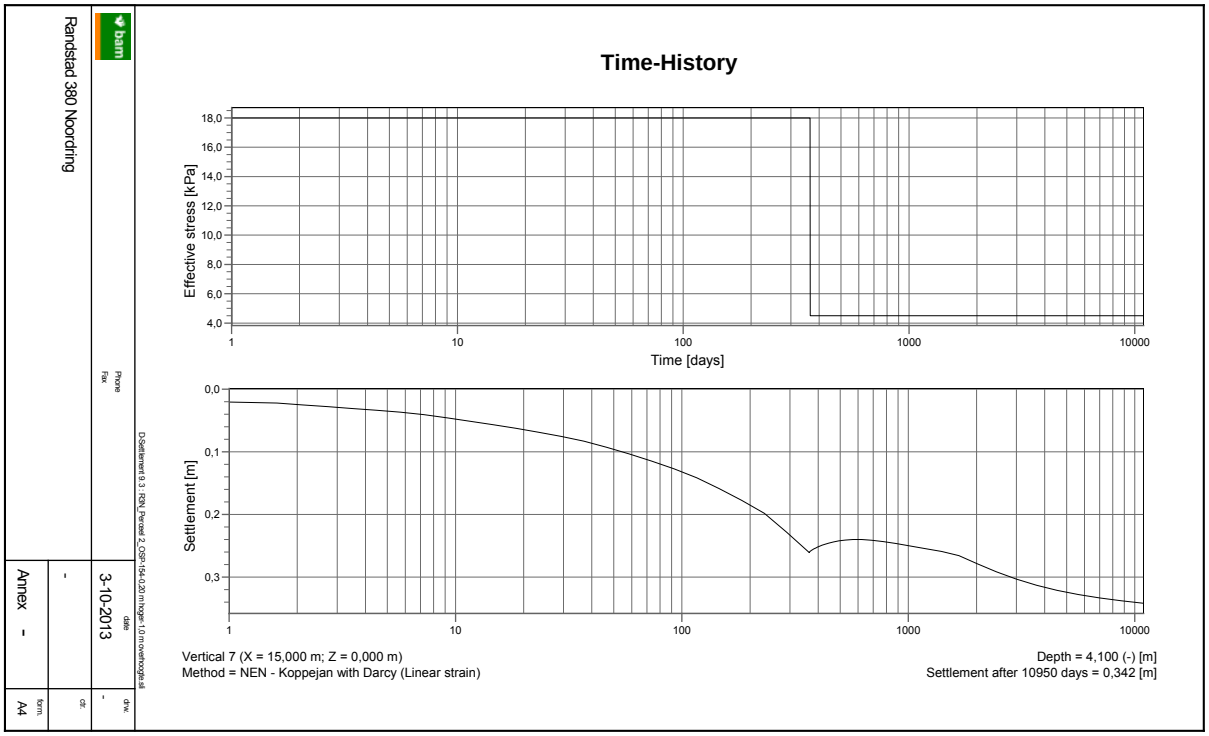

Figuur 9 Verloop zettingen dwarsprofiel OSP 154

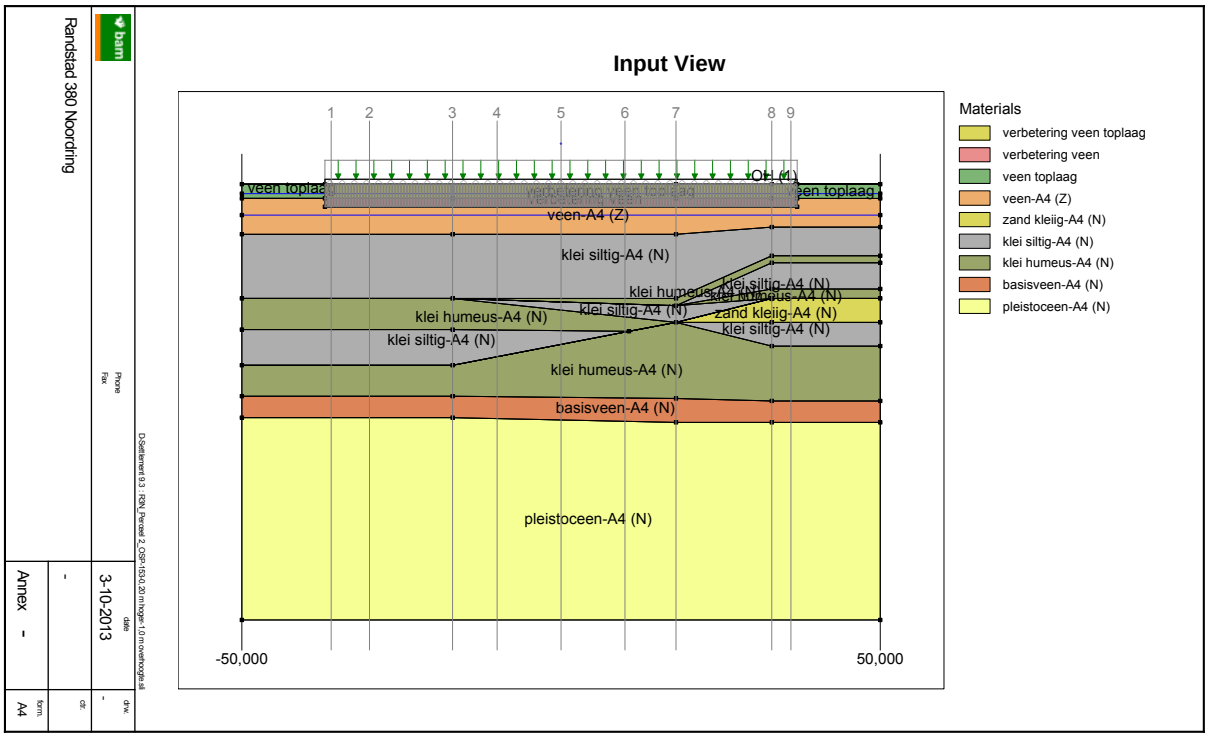

Figuur 10 Geometrie dwarsprofiel OSP 153

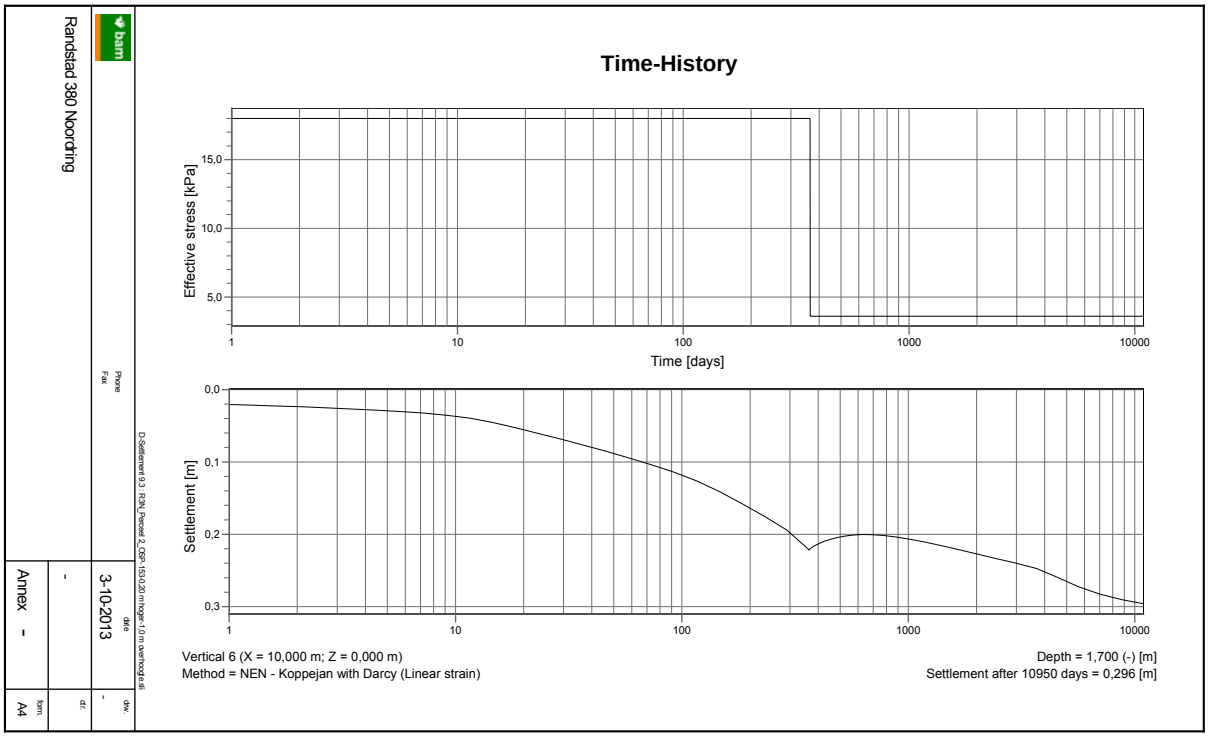

Figuur 11 Verloop zettingen dwarsprofiel OSP 153

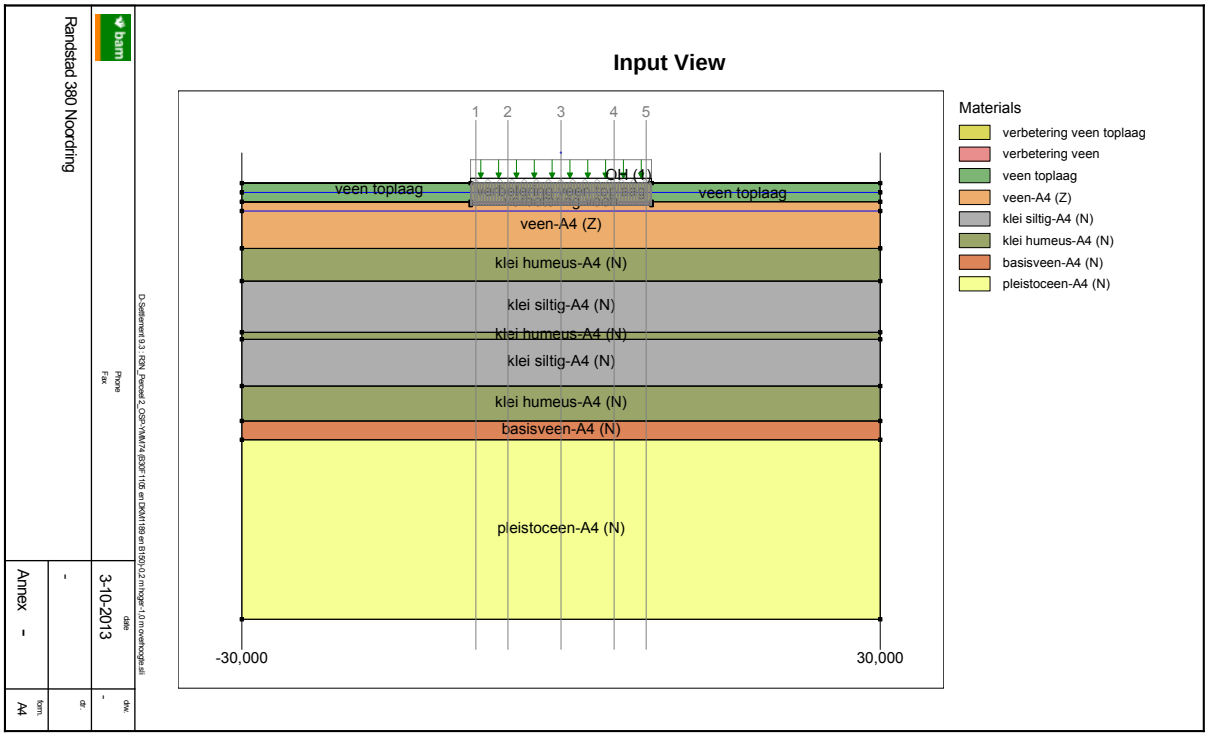

Figuur 12 Geometrie dwarsprofiel OSP YMM-74

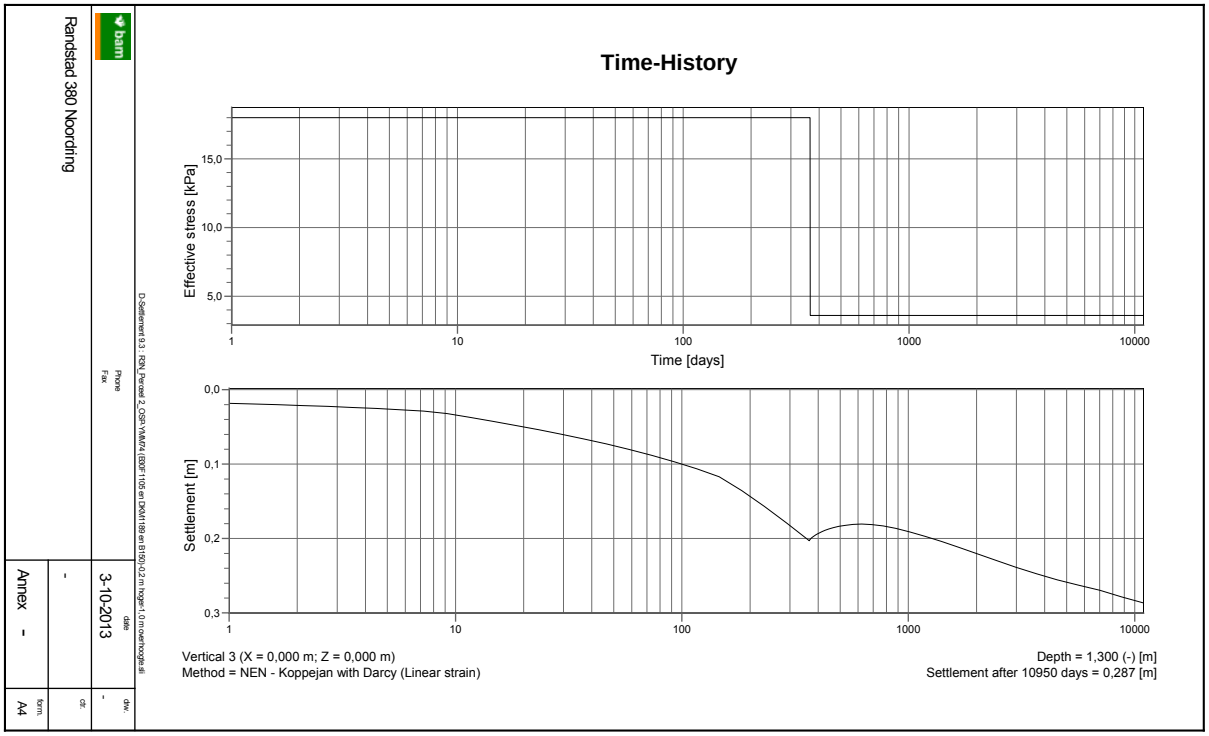

Figuur 13 Verloop zettingen dwarsprofiel OSP YMM-74

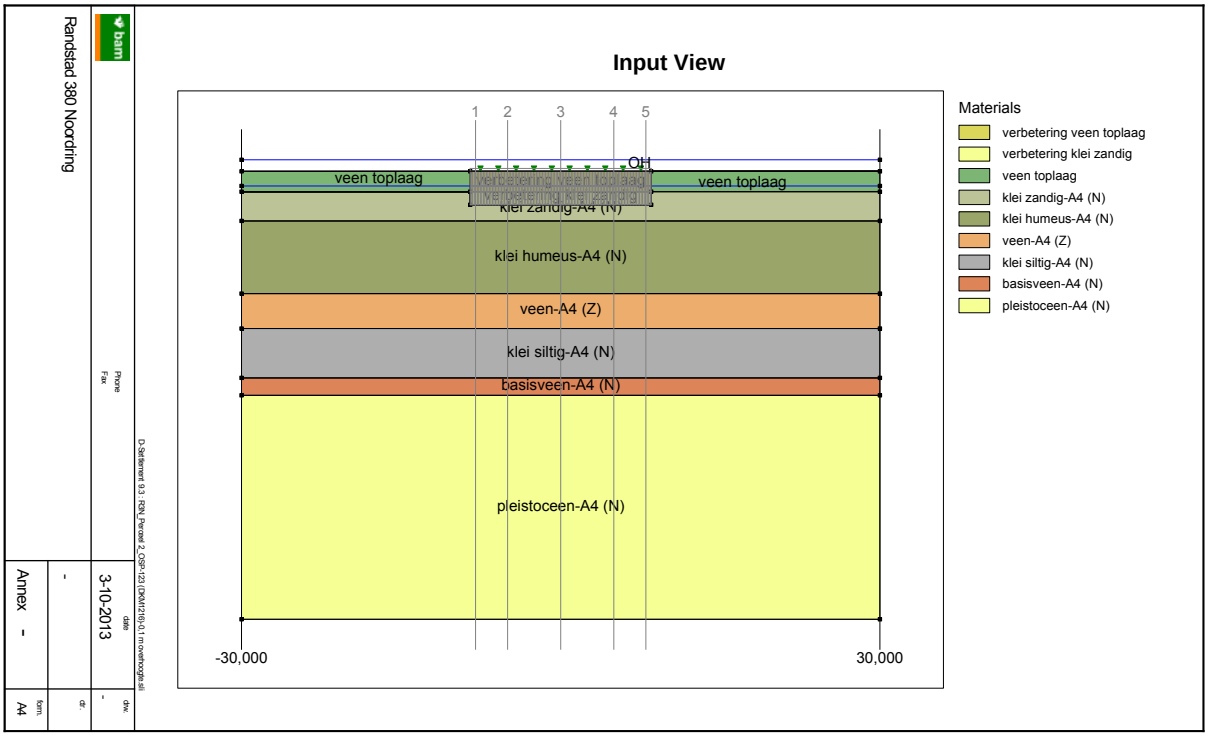

Figuur 14 Geometrie dwarsprofiel OSP 123

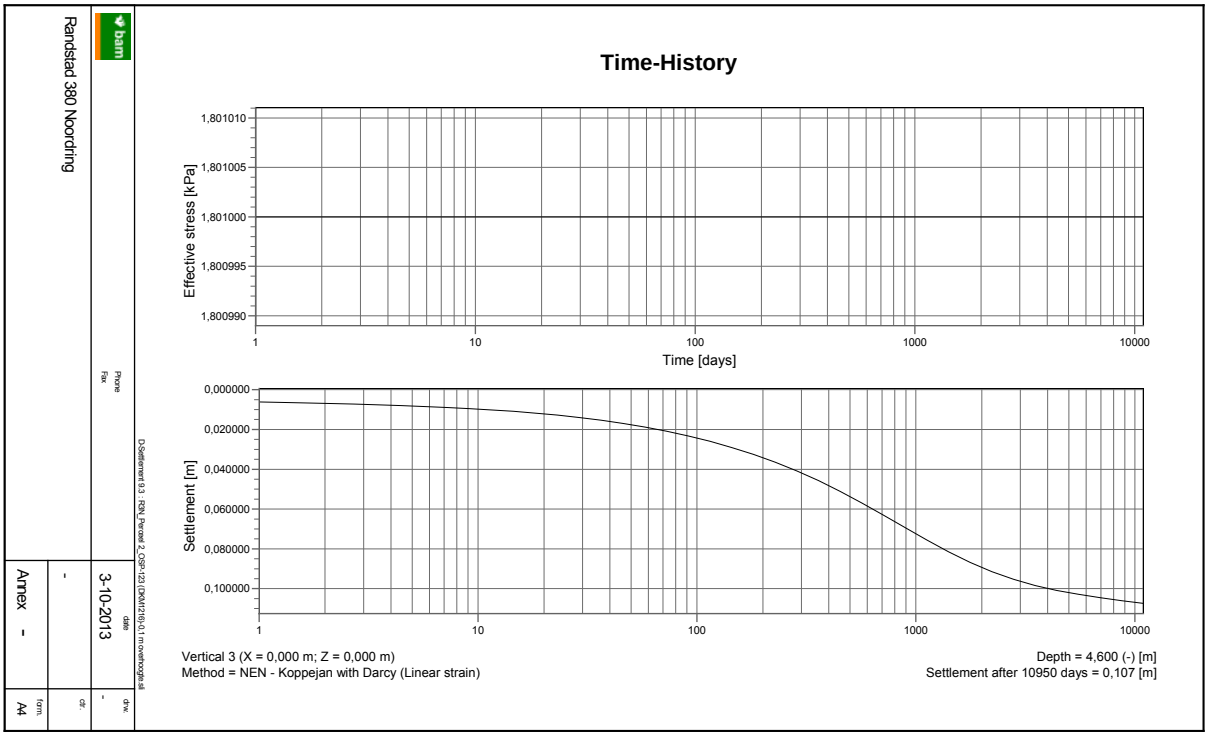

Figuur 15 Verloop zettingen dwarsprofiel OSP 123

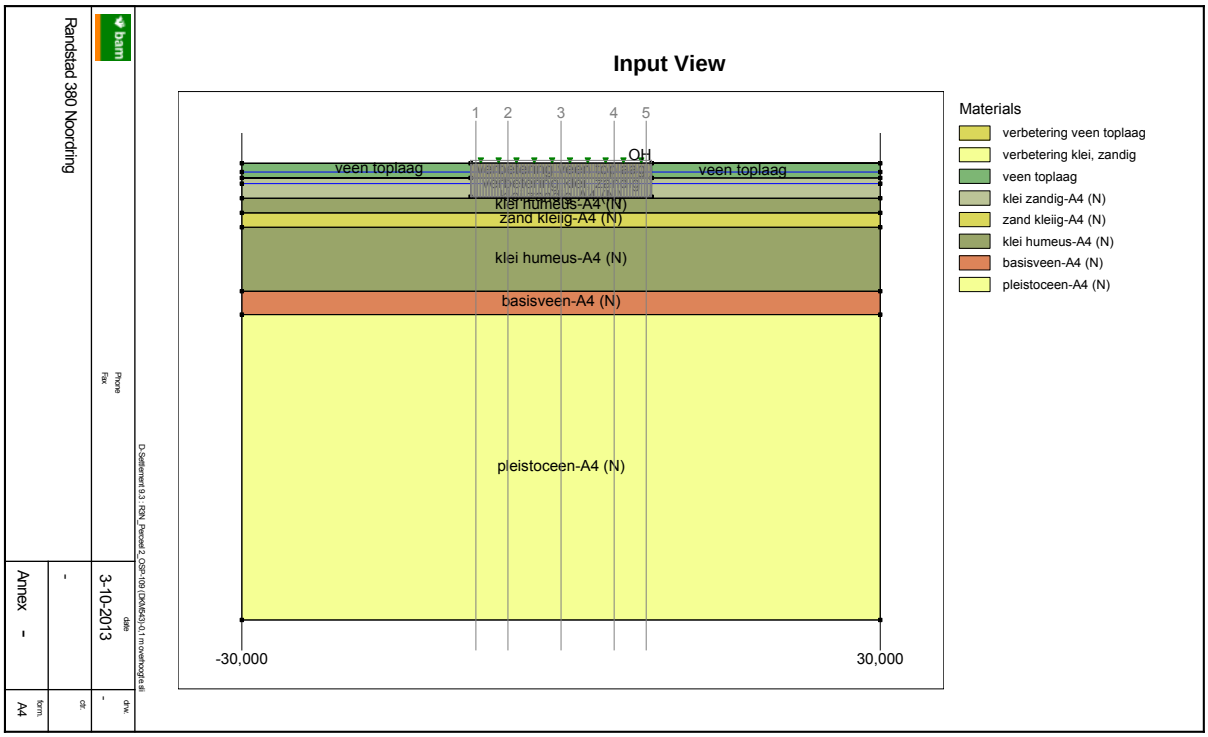

Figuur 16 Geometrie dwarsprofiel OSP 109

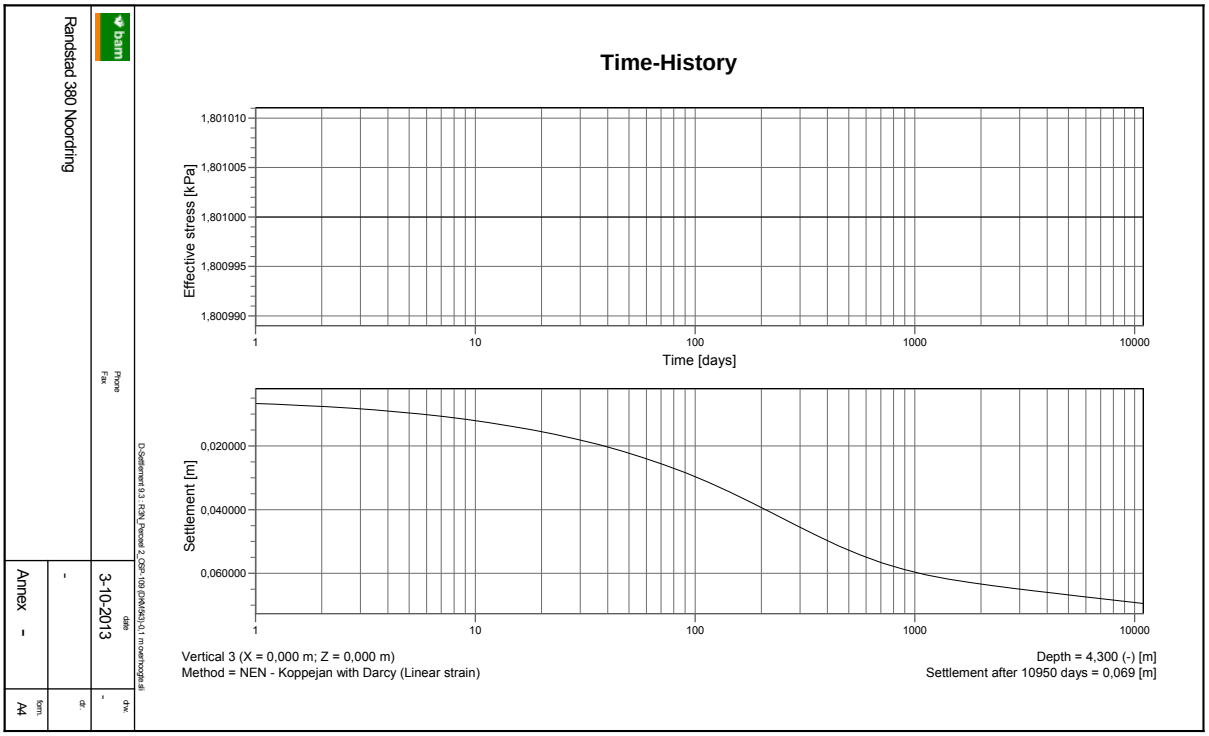

Figuur 17 Verloop zettingen dwarsprofiel OSP 109

4.2. CONCLUSIES EN ADVIES

Op basis van de berekende zettingen kunnen de volgende conclusies worden getrokken:

- Voor de berekeningen is uitgegaan van een onnauwkeurigheid in de zettingen van 50%;
- Eindzettingen OSP's:
- Dwarsprofiel bij OSP154: 0,14 tot 0,17 m à 0,40 tot 0,51 m;
- Dwarsprofiel bij OSP153: 0,13 tot 0,15 m à 0,39 tot 0,45 m;
- Dwarsprofiel bij OSP YMM-74: 0,15 m à 0,44 m;
- Dwarsprofiel bij OSP123: 0,06 m à 0,17 m;
- Dwarsprofiel bij OSP109: 0,04 m à 0,11 m;
- Restzettingen na 365 dagen: kleiner dan de restzettingseis van 0,10 m;
- Na 5 jaar na oplevering is meer dan 80 % zetting opgetreden en/of is de restzetting klein (< 0,07 m).

De onderstaande maatregelen zijn t.p.v. de OSP's nodig:

- OSP154: 0,2 m hoger aanleggen, overhoogte: 1,0 m;
- OSP153: 0,2 m hoger aanleggen, overhoogte: 1,0 m;
- OSP YMM-74: 0,2 m hoger aanleggen, overhoogte: 1,0 m;
- OSP123: overhoogte: 0,10 m ter compensatie van verwachte zetting;
- OSP109: overhoogte: 0,10 m ter compensatie van verwachte zetting.

De zettingen worden door middel van monitoring gecontroleerd.

Geadviseerd wordt om na het graven van het cunet van de OSP's zo snel mogelijk daarna aan te vullen met zand om eventuele zwel (dat daarna zakt en dus tot extra zetting leidt) te beperken.

Geadviseerd wordt om na de voorbelastingsperiode de overhoogte t.o.v. het huidig maaiveld te verwijderen.

5. MONITORING

5.1. ZAKBAKEN

Tijdens de uitvoering van de werkzaamheden worden zakbaken in het cunet van de OSP's geplaatst. Gezien de aangetroffen bodemopbouw wordt geadviseerd om minimaal 2 zakbaken per OSP te plaatsen. Een schematische weergave van de locatie van een zakbaak is in figuur 18 weergegeven.

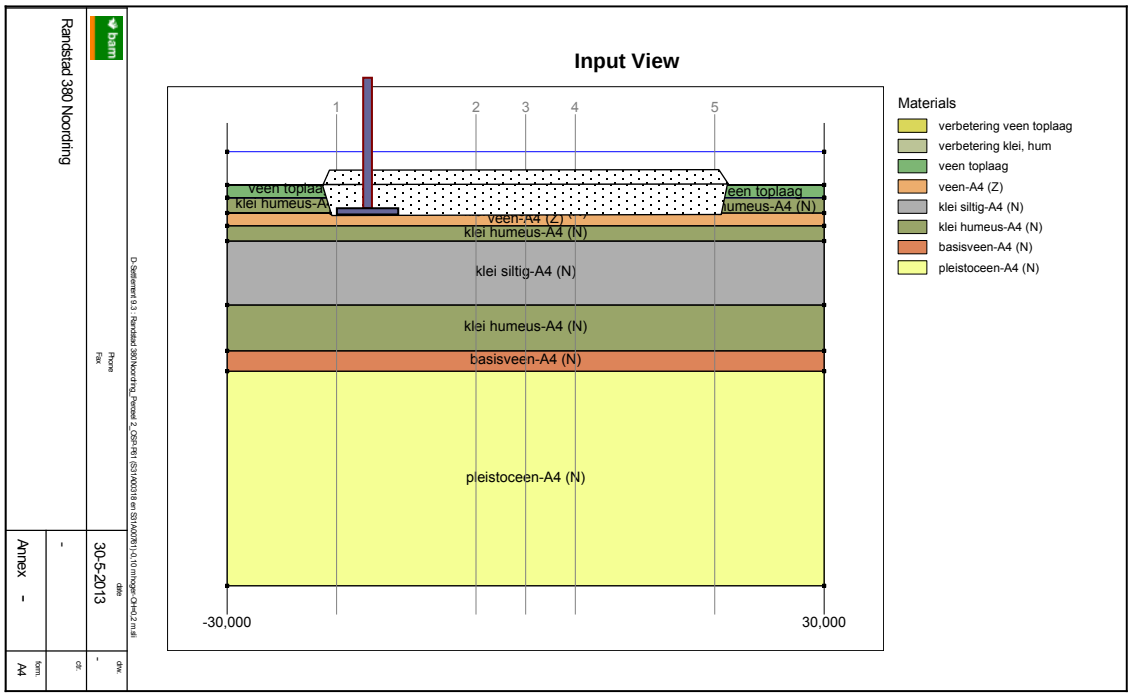

Figuur 18 Locatie zakbaak in het cunet van de OSP (aanvulling)

Met behulp van de meetgegevens kunnen de berekeningen van de zettingen worden gevalideerd.
De zakbaken dienen conform de onderstaande specificaties te worden gemeten.

Nulmeting
De nulmeting wordt uitgevoerd na plaatsing van de zakbaak en kort voor het aanbrengen van de eerste ophoging. Tijdens deze meting dient het volgende gemeten te worden:
nr, datum, tijd, X, Y, Z, lengte, hoogte plaat

waarin:
nr: nummer zakbaak
datum: datum van meting
tijd: tijd van meting
X,Y: RD coördinaten zakbaak
Z: hoogte bovenkant buis t.o.v. NAP
lengte: lengte van de buis gemeten vanaf de voetplaat
hoogte plaat: bovenkant afdekplaat t.o.v. NAP

Herhaalmetingen
Tijdens de herhaalmetingen dient het volgende gemeten te worden:
nr, datum, tijd, X, Y, Z, lengte, mv
waarin:
mv: is hoogte maaiveld bij zakbaken t.o.v. NAP

Opgemerkt wordt hierbij dat bij elke verlenging van de zakbaken de hoogte hiervan vóór en na het ophogen gemeten dienen te worden.

Meetschema
De zakbaken dienen bij voorkeur volgens onderstaand schema te worden gemeten.

Tijdens ophogen	Minimaal twee keer per week en na elke ophoogslag
Na ophogen tot 3 maanden	Minimaal elke week
Vanaf 3 maanden tot ½ jaar	Minimaal elke 2 weken
Vanaf ½ jaar en verder	Minimaal elke 4 weken

Meetnauwkeurigheid
De metingen dienen te worden uitgevoerd met een meetnauwkeurigheid van 5 mm.

Uitvoering
De zakbaken zijn onder de voetplaat voorzien van een stalen buis met een lengte van ongeveer 0,2 m. Bij plaatsing wordt de stalenbuis de grond ingeduwd waardoor de voetplaat op het maaiveld komt. De stalen buis zorgt voor de stabiliteit van de zakbaken.

5.2. WATERSPANNINGSMETERS

Locaties
De waterspanningsmeters worden geplaatst ter plaatse van de OSP's. Er wordt 1 spanningsmeter per OSP geplaatst.
Gezien de bodemopbouw en de maatgevende grondwaterstanden worden de waterspanningsmeters op circa 2,0 m –mv geplaatst. Dit betekent het volgende:

- OSP154: waterspanningsmeter op NAP-6,0 m;
- OSP153: waterspanningsmeter op NAP-4,0 m;
- OSP YMM-74: waterspanningsmeter op NAP-5,0 m;
- OSP123: waterspanningsmeter op NAP-7,0 m;
- Ter plaatse van OSP109 is de ondergrond zandig en de zettingen gering. Er hoeft daar geen waterspanningsmeter te worden geplaatst.

Plaatsing
Tijdens het plaatsen van de waterspanningsmeter worden de volgende gegevens genoteerd:
nr, datum, tijd, X, Y, diepte, mv, barometer, meting

waarin:
nr: nummer waterspanningsmeter
datum: datum van meting
tijd: tijd van meting
X,Y: RD coördinaten waterspanningsmeter
diepte: diepte filter tov NAP
mv: is hoogte maaveld tov NAP
barometer: luchtdruk in millibar
meting: meetwaarde in millibar

Nulmeting
Ongeveer 2 weken voor het aanbrengen van de eerste zandlaag worden de waterspanningsmeters geplaatst. Na 1 week worden 3 nulmetingen uitgevoerd. Tijdens de nulmeting dient het volgende gemeten te worden:
nr, datum, tijd, barometer, meting

Herhaalmetingen
Tijdens de herhaalmetingen worden de waterspanningsmeters conform de nulmeting gemeten.

Opgemerkt wordt dat er geen stangen op maaiveld blijven zodat het dieper zakken van het filter alleen uit controleberekeningen kan worden bepaald.

Meetschema
De waterspanningsmeters dienen bij voorkeur volgens onderstaand schema te worden gemeten.

Tijdens ophogen	Minimaal twee keer per week en na elke ophoogslag
Na ophogen tot 3 maanden	Minimaal elke week
Vanaf 3 maanden tot ½ jaar	Minimaal elke 2 weken
Vanaf ½ jaar en verder	Minimaal elke 4 weken

Uitvoering
De waterspanningsmeters worden met een voertuig geplaatst en blijven na de werkzaamheden in de grond achter. Na het op diepte drukken van de waterspanningsmeters wordt de stang getrokken en blijft alleen de meetkabel achter in de grond. Deze wordt naar de zijkant, buiten de ophoging geleid, en zichtbaar gemarkeerd.

Indien een waterspanningsmeter tijdens de uitvoering ernstig wordt beschadigd of er is reden om aan te nemen dat de meting niet meer betrouwbaar is, dient deze te worden vervangen.

Referenties

1. NEN-EN 1990:2002, Grondslagen van het constructief ontwerp.
2. NEN-EN 1993, Ontwerp en berekening van staalconstructies.
3. NEN-EN 1997-1:2012, Geotechnisch ontwerp – Deel 1: Algemene regels.
4. CUR 162, Construeren met grond.
5. CUR 166, Damwandconstructies, deel 1 en 2, 5e druk.
6. CUR 2003-7, Bepaling geotechnische parameters.
7. CROW publicatie 204, Betrouwbaarheid van zettingsprognoses.
8. Nota van inlichtingen nummer 2, 10 december 2012.
9. Nota van inlichtingen nummer 12, 29 maart 2013.
10. Kabels, Specifiek programma van eisen, project R380-Noordring, R380 12 0239, versie 1.2, 11 april 2012.
11. Achtergrondrapport Archeologie, bodem & water - MER Noordring Randstad, definitief versie 2.0, 12 april 2012.
12. Gegevens uit de gebundelde informatie (polderpeilen, stijghoogte,…) uit de GIS omgeving: http://gis.baminfraconsult.nl/apps/001103_Randstad380Noord/.
13. Fugro, Geotechnisch onderzoek (sonderingen) project R380 Noordring-Zuid, 1010-0117-003, oktober-december 2012, januari en februari 2013.
14. Fugro, Laboratoriumrapportages (boringen met peilbuizen) project R380 Noordring-Zuid, 1010-0117-003, december 2012-maart 2013.
15. Hoogheemraadschap van Rijnland, Waterstructuurvisie Haarlemmermeerpolder, 22 september 2010.
16. TNO, Grondwaterkaart van Nederland nummers 24 en 25. Delft: TNO, 1979.
17. www.dinoloket.nl.

6. BIJLAGEN

Bijlage 1 Geotechnische lengteprofielen

Bijlage 2 Resultaten zettingsberekeningen OSP's

BIJLAGE 1 GEOTECHNISCHE LENGTEPROFIELEN

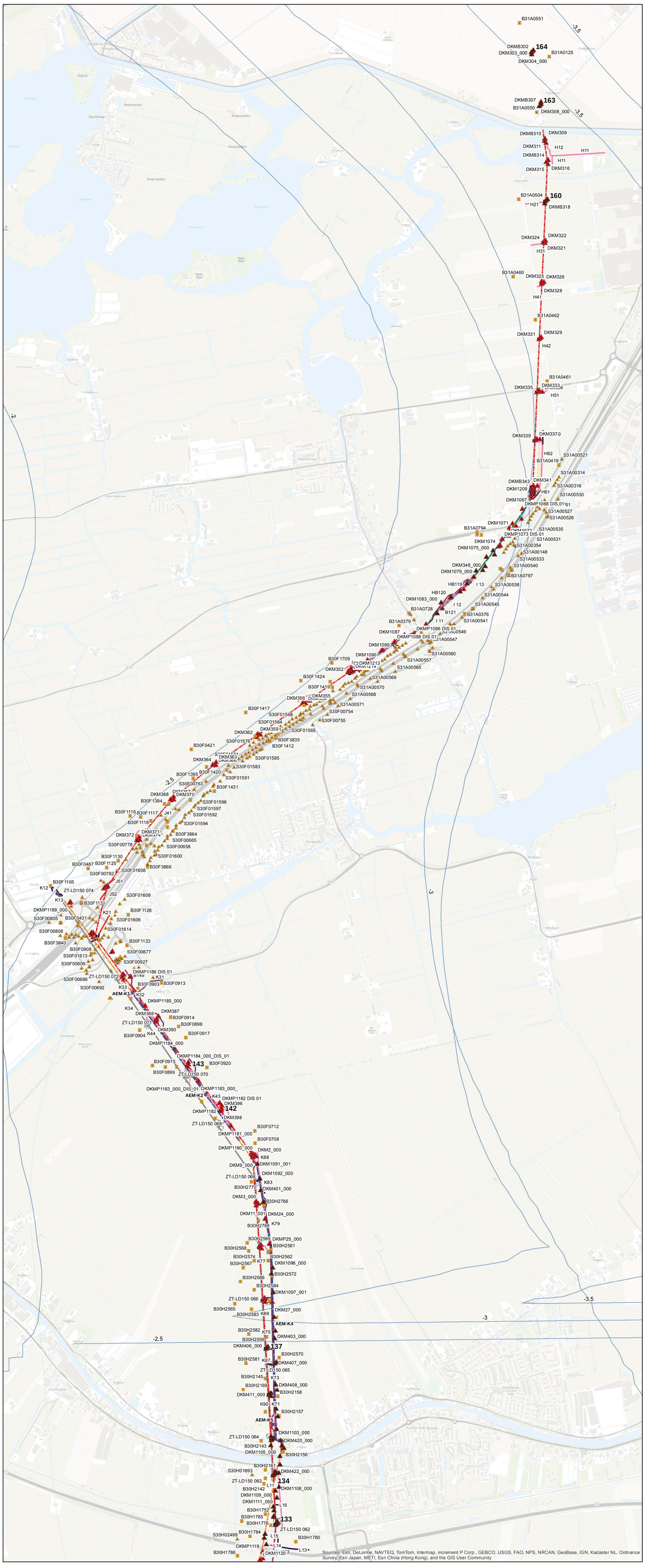

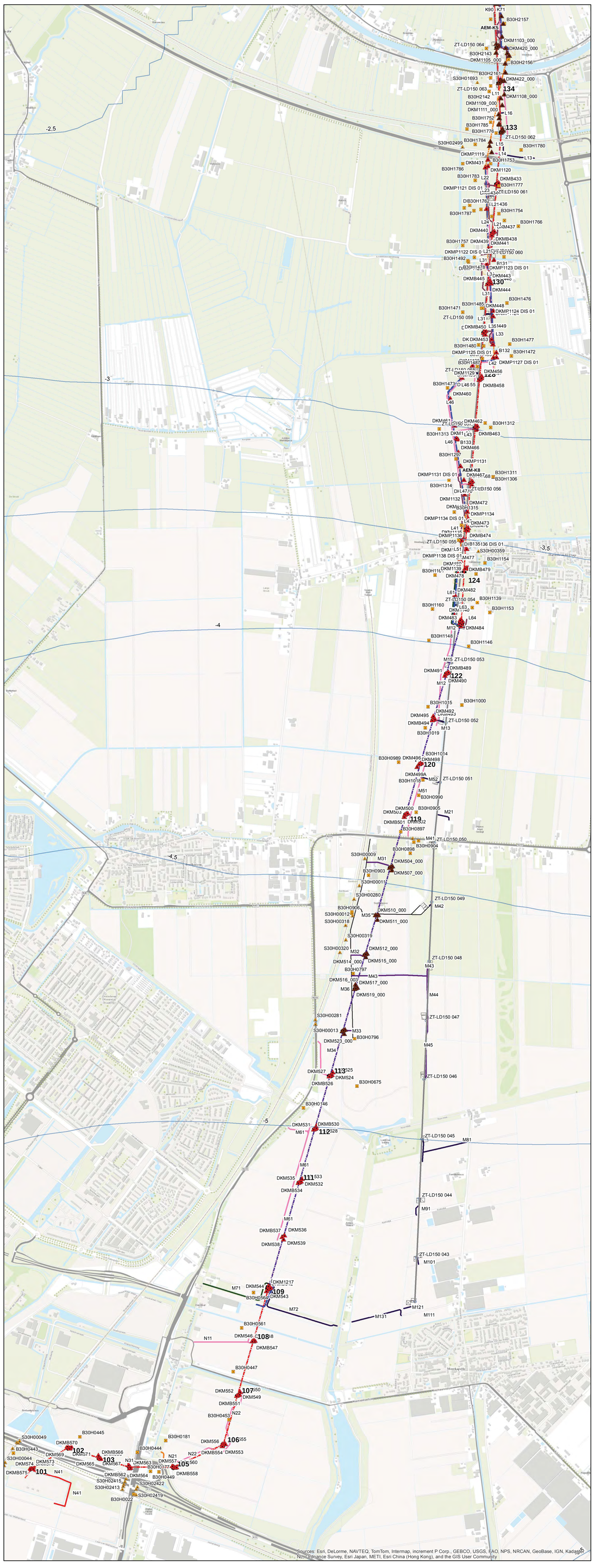

Legenda

- Dino Sonderingen
- Dino Boringen
- Zesde levering 29-03-2013
- Zevende levering
- Achtste levering 05-07-2013 Fugro
- Sonderingen CPT 30-08-2013 Fugro
- Labaratorium reslutaten 30-08-2013 Fugro
- Sonderingen kabelsleuf 30-08-2013 Fugro
- Sonderingen mast 138 - 141 (30-08-2013) Fugro

Tracé

LAYER

- 0
- kl-nw-150kV boring
- kl-nw-150kV open ontgraving
- kl-nw-150kV_open_ontgraving_gewijzigde_ligging
- kl-nw-380kV boring
- kl-nw-380kV bovengronds - combi
- kl-nw-380kV bovengronds - solo
- kl-nw-380kV open ontgraving
- kl-nw-380kV-boring-gewijzigde-ligging
- kw-nw-mastfundaties
- Moflocaties
- Mastfundaties
- Tracé
- Masten

Bouwwegen

LAYER

- af-nw-bm_200
- gk-nw-damwand
- kd-nw-bm_2000
- vh-nw-toegangsweg-H1-zonder-zettingsbeperkende-maatregelen
- vh-td-bouwweg-F1-rijplaten-lengterichting-op-bestaand-mv
- vh-td-bouwweg-F2-rijplaten-lengterichting-op-zandbed-en-doek
- vh-td-bouwweg-F3-rijplaten-dwarsrichting-op zand-en-doek
- vh-td-bouwweg-F4-rijplaten-lengterichting-op-houtsnippers-in-doek
- vh-td-bouwweg-F5-rijplaten-dwarsrichting-op-houtsnippers-in-doek
- vh-td-bouwweg-G1-fundering-doek-zand-doek
- vh-td-bouwweg-G2-fundering-doek-op-bestaande-verharding

Zones

Layer

- Zone: Gestuurde boring
- Zone: Open ontgraving
- Zone: Werkgebied mast
- Zone: Afbraak mastkop
- Zone: Afbraak mastlichaam
- Zone: Haspelopstelplaats
- Zone: Kraan
- Zone: Trek remstation

bam
Contact: gis@baminfraconsult.nl

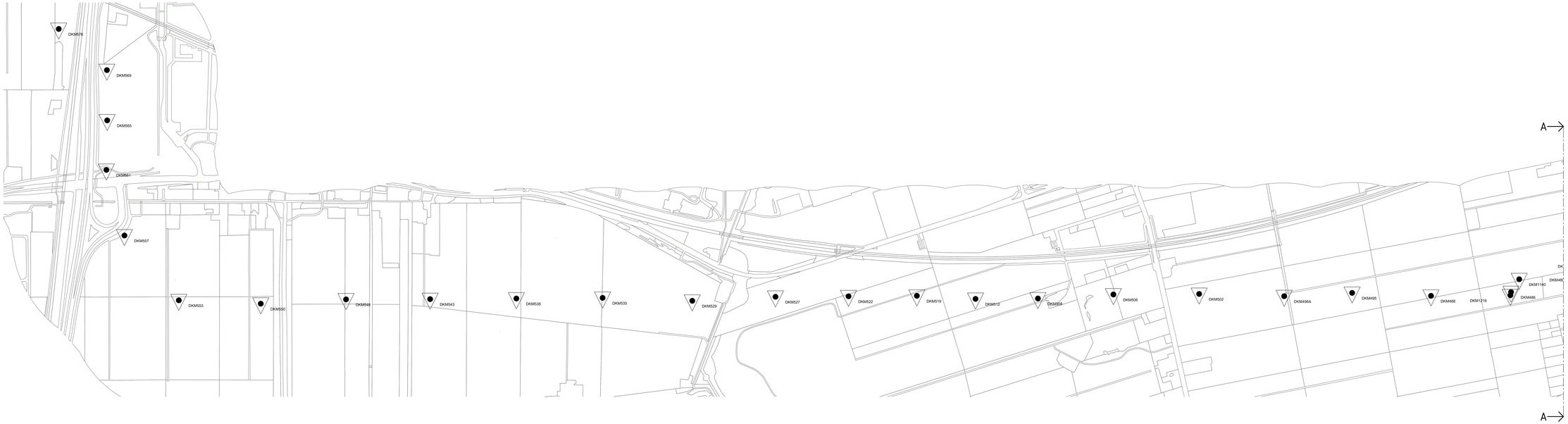

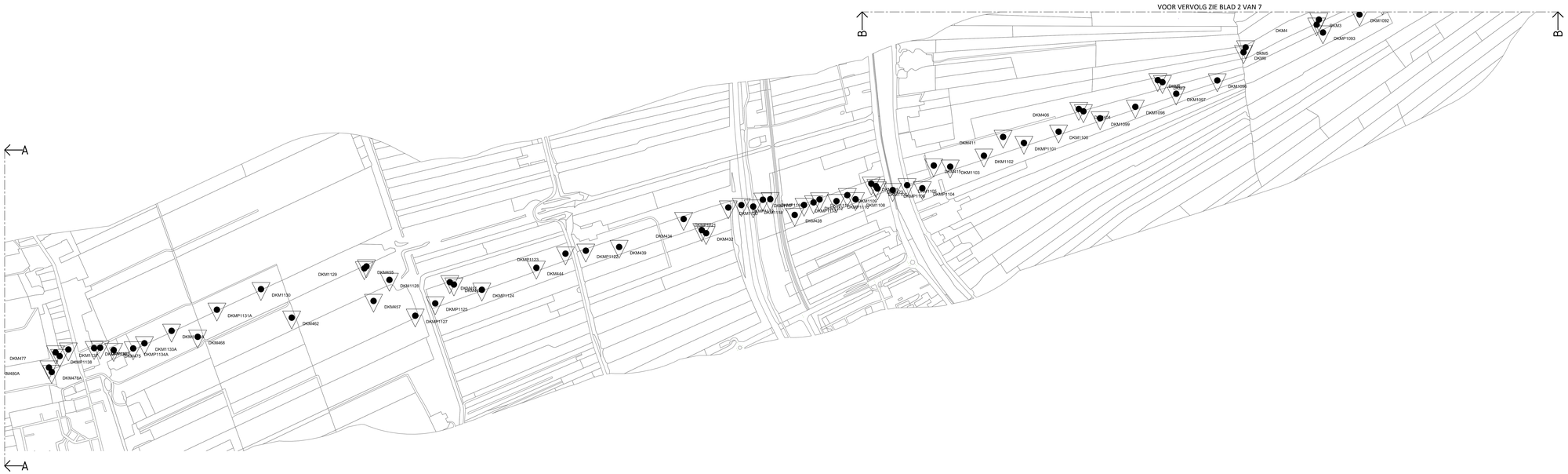

LEGENDA

LOCATIE SONDERING

bam / COFELY FABRICOM — Combining Knowledge and Experience — Randstad 380kV Noordring		P. de Jager	A. Hogenboom
		Tekenaar	Vrijgegeven door
Omschrijving: Definitief Overzichtstekening Geotechnisch lengteprofiel	D 3		
	D 2		
	D 1		
	Nr.	Tekening	Datum / Naam
Project: Randstad 380kV Noordring	Schaal: 1:5000	Formaat: A0 R	
	Naam: E.J.M. van Tol	Datum: 02-10-2013	
TenneT — Taking power further	Bestanden: R3N-TEK-0116 ... 001		
	Uitvoerder Werken:	Datum	

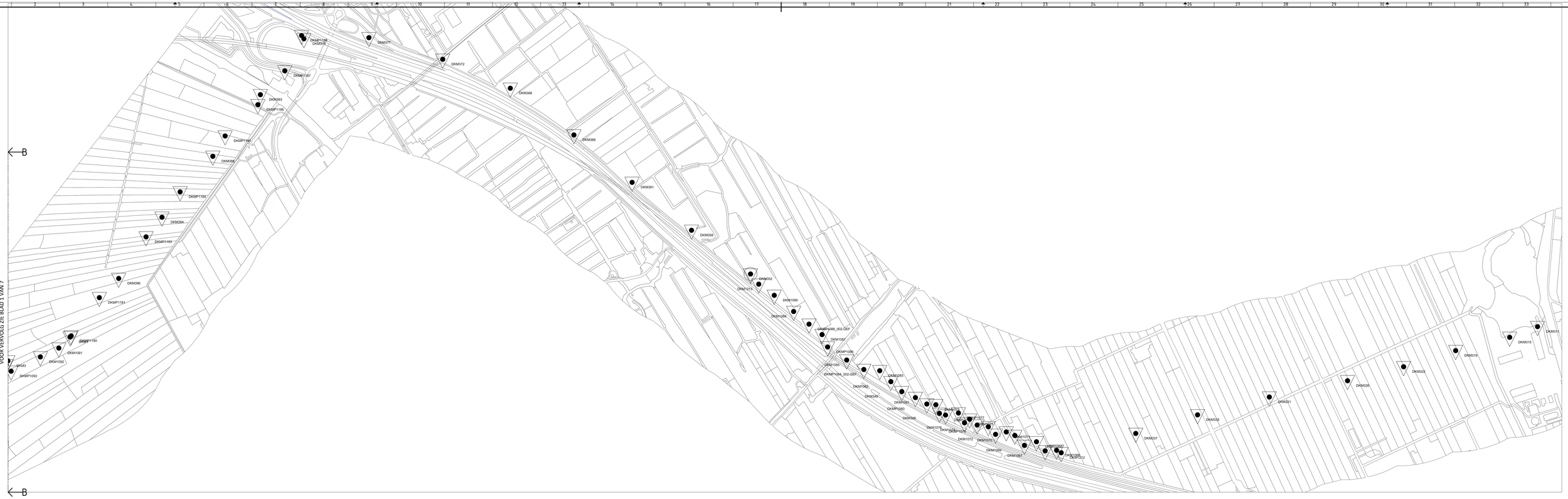

VOOR VERVOLG ZIE BLAD 1 VAN 7

LEGENDA

LOCATIE SONDERING

bam / COFELY FABRICOM — Combining Knowledge and Experience		P. de Jager	A. Hogenboom
Randstad 380kV Noordring		Tekenaar	Hoofdgeometer
Definitief Overzichtstekening Geotechnisch lengteprofiel	D 3 D 2 D 1 No. Omschrijving	Datum	Naam
Omschrijving	Code: HDR1 1280 HDR 1500	Formaat: A0/1	
Project: Randstad 380kV Noordring	Naam: E.J.M. van Tol	Datum: 03-10-2013	
TenneT — Taking power further	Ontwerpnummer: R3N-TEK-0116 ... 002		
	Uitvoerend Ontwerper:	Tekening:	

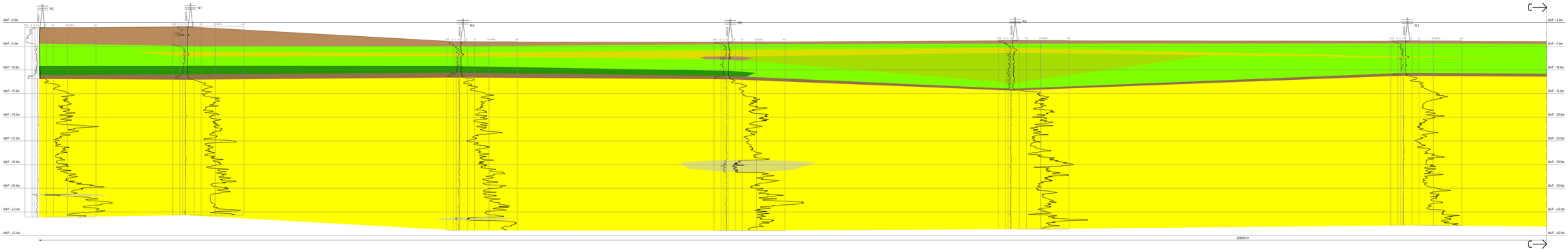

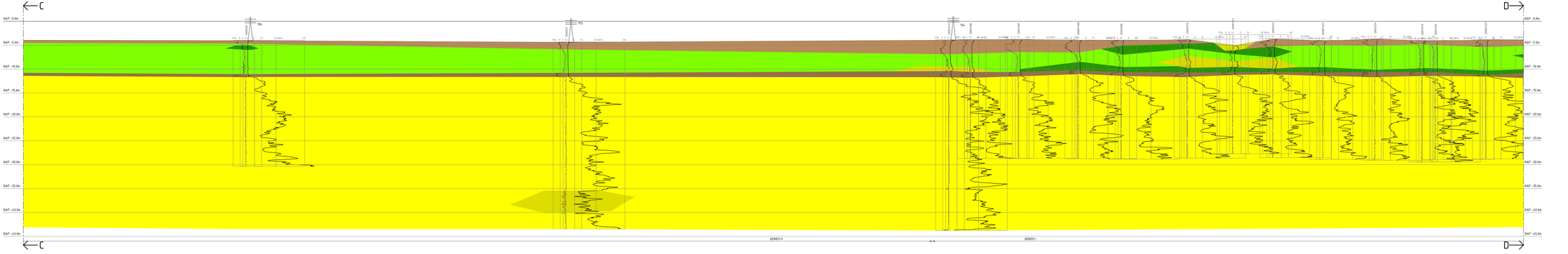

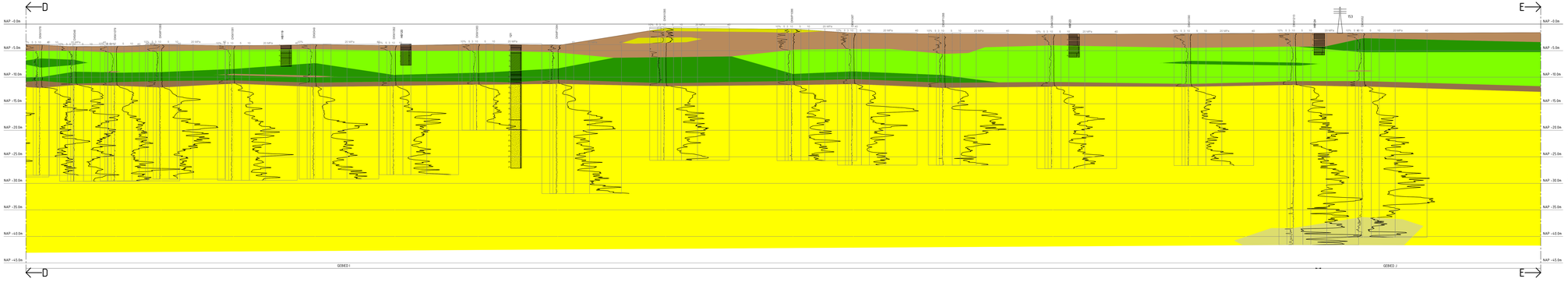

VOOR VERVOLG ZIE BLAD 4 VAN 7

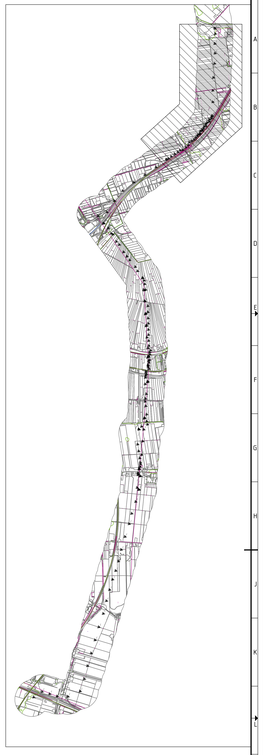

LEGENDA

- ZAND PLEISTOCEEN, LOKAAL SILTIG
- ZAND SILTIG KLEIIG
- BASISVEEN
- VEEN (LOKAAL VEENDUIK, TOPLAAG)
- KLEI SILTIG, LOKAAL ZANDIG
- KLEI HUMEUS, LOKAAL ZANDIG
- KLEI ZANDIG
- KLEI SILTIG, DIEP / LEEM, LOKAAL VENIG

Combining Knowledge and Experience
bam COFELY FABRICOM
Randstad 380kV Noordring

P. de Jager | A. Negrijtsen
Uitgevoerd door | Uitgegeven door

Definitief

01			
02			
03			
Rev.	Omschr.	Datum	Paraf

Tekening: Geofeschivsch lengteprofiel

Schaal: VERT 1:200, HOR 1:1000 | Formaat: A4 X

Project: Randstad 380kV Noordring

Datum: E.J.M. van Tol | Datum: 05-10-2015

Tennet Taking power further

Tekeningnummer: R3N-TEK-0116 ... 003

Aantal vel/bladen: | Blad: | Versie:

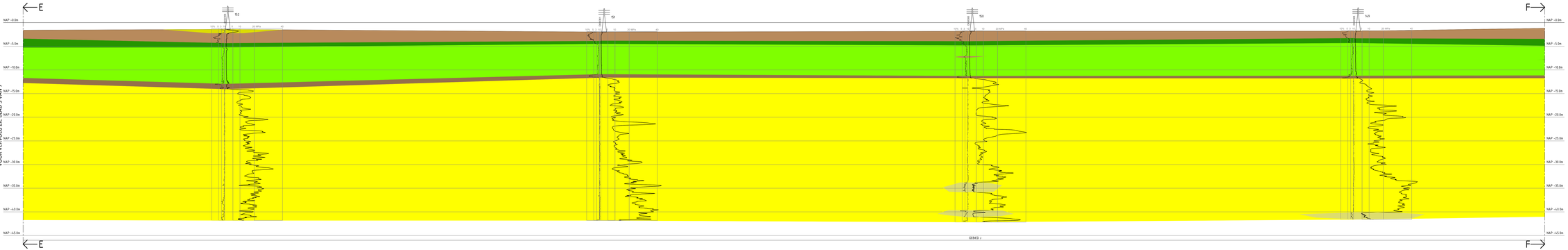

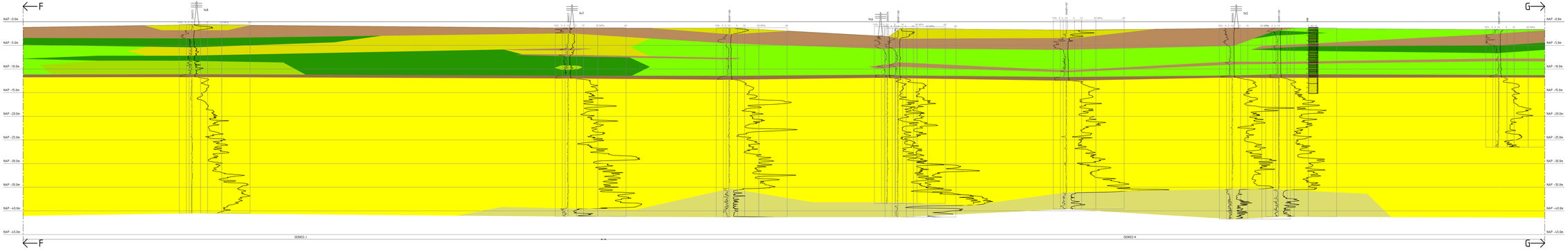

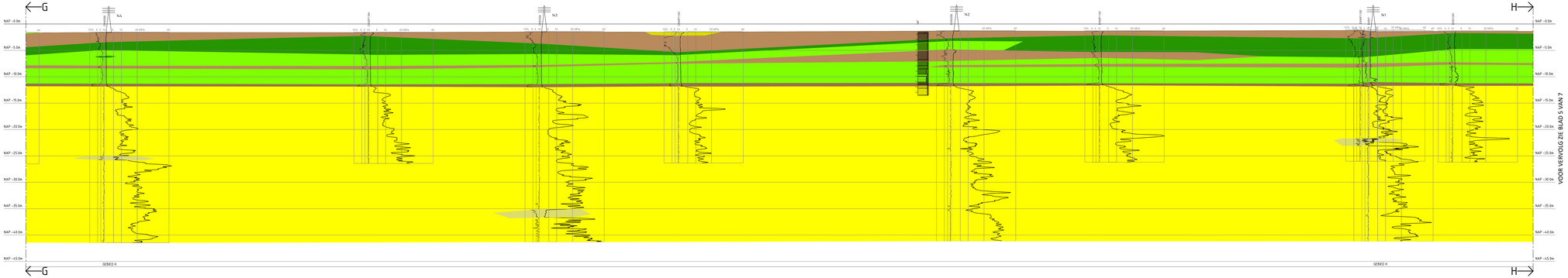

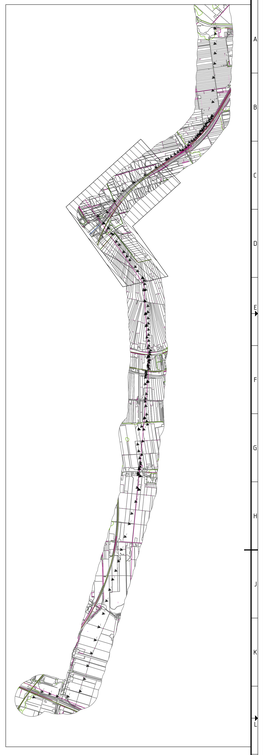

LEGENDA

- ZAND PLEISTOCEEN, LOKAAL SILTIG
- ZAND SILTIG KLEIIG
- BASISVEEN
- VEEN (LOKAAL VEENDUIN, TOPLAAG)
- KLEI SILTIG, LOKAAL ZANDIG
- KLEI HUMEUS, LOKAAL ZANDIG
- KLEI ZANDIG
- KLEI SILTIG, DIEP / LEEM, LOKAAL VEENIG

bam — Combining Knowledge and Experience — COFELY FABRICOM — Technology for a better world

Randstad 380kV Noordring

P. de Jager — Uitgevoerd door

A. Negrijtsen — Controleur door

Definitief

Omschrijving: Geofeshivsch lengteprofiel

01			
02			
03			
Rev.	Wijziging	Datum	Naam

Project: Randstad 380kV Noordring

Schaal: VERT 1:200, HOR 1:1000 — Formaat: A0 II

Datum: E.J.M. van Tol — Datum: 05-10-2015

TenneT — Taking power further

Tekeningnummer: R3N-TEK-0116 ... 004

Aantal tekeningen: 1 — Blad: 4

Revisie:

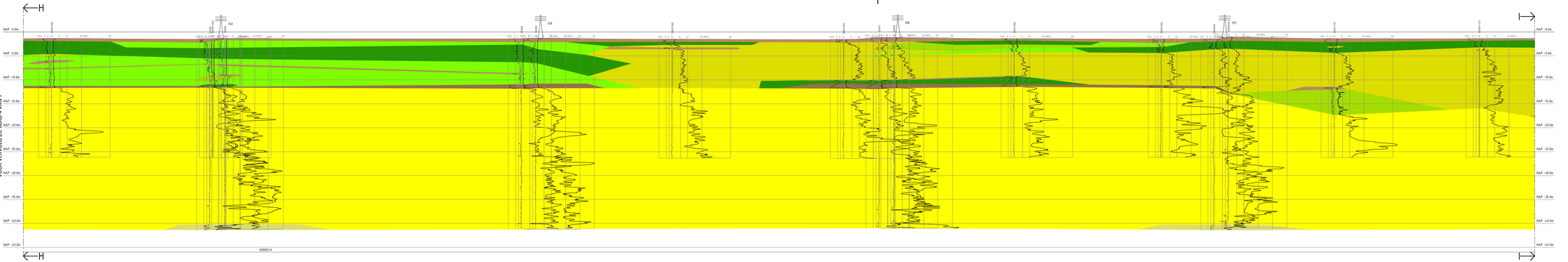

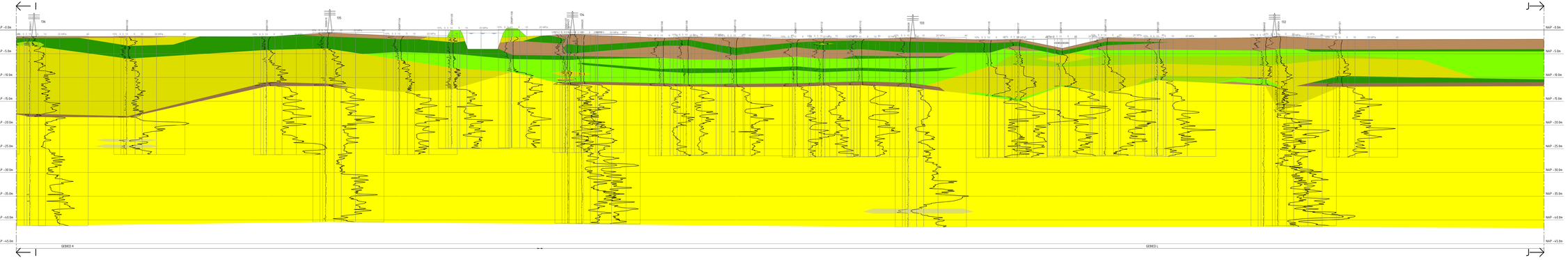

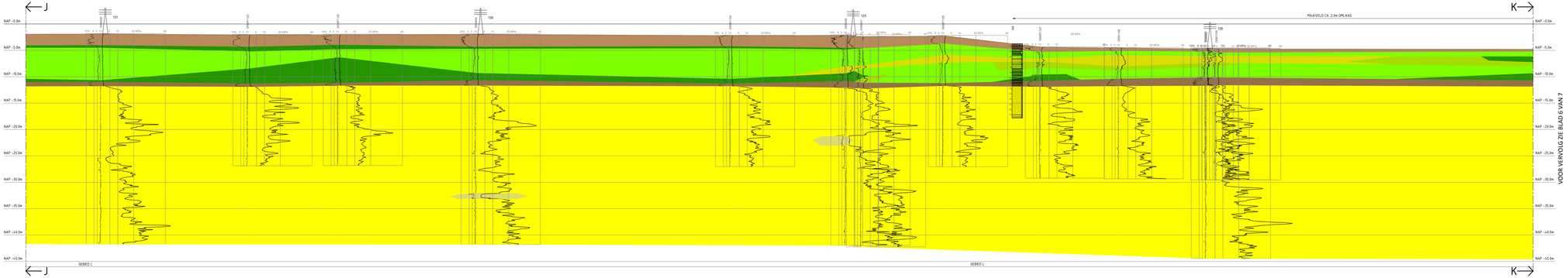

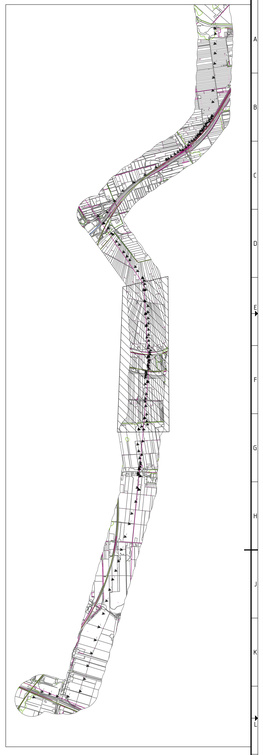

LEGENDA

- ZAND PLEISTOCEEN, LOKAAL SILTIG
- ZAND SILTIG KLEIIG
- BASISVEEN
- VEEN (LOKAAL VEENDUIN, TOPLAAG)
- KLEI SILTIG, LOKAAL ZANDIG
- KLEI HUMEUS, LOKAAL ZANDIG
- KLEI ZANDIG
- KLEI SILTIG, DIEP / LEEM, LOKAAL VENIG

bam — Combining Knowledge and Experience — COFELY FABRICOM — Randstad 380kV Noordring

P. de Jager — 27-07-2011
A. Negrijtsen — 27-07-2011

Definitief

Omschrijving: Geofeshivsch lengteprofiel

Project: Randstad 380kV Noordring

01			
02			
03			
04			
Nr.	Wijziging	Datum	Paraf

Schaal: VERT 1:200, HOR 1:1000 | Formaat: A0 II

Datum: 27-06-2011 | Datum: 05-10-2011

TenneT — Taking power further

Tekeningnummer: R3N-TEK-0116 ... 005

Aantal tekeningen: 1 | Blad: 1

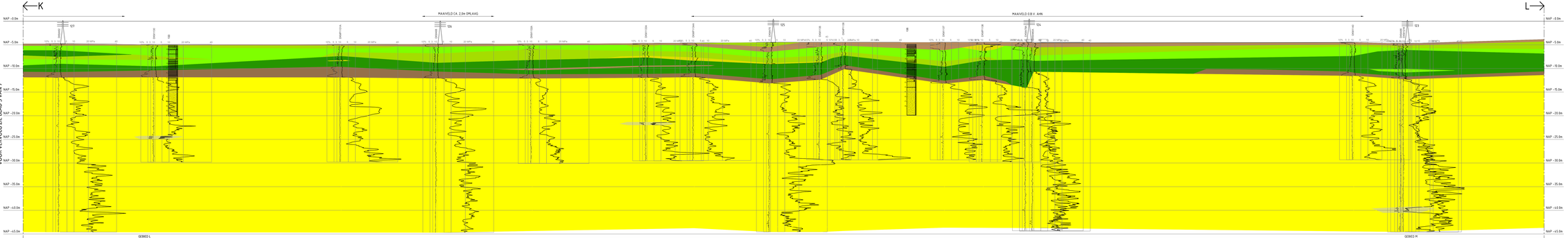

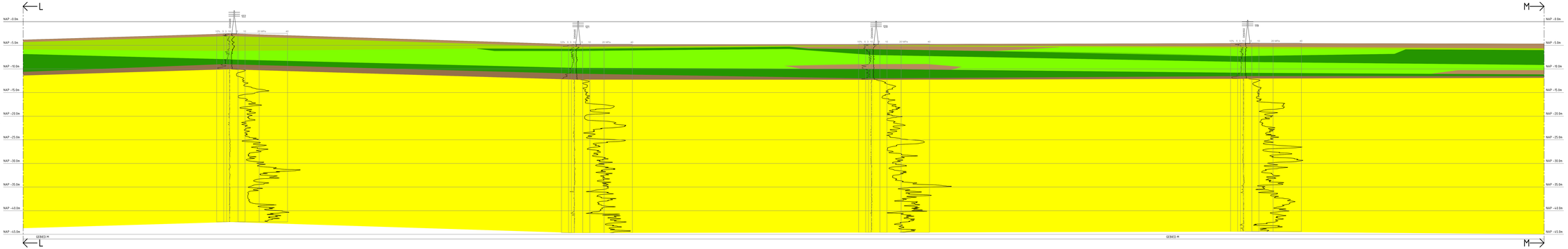

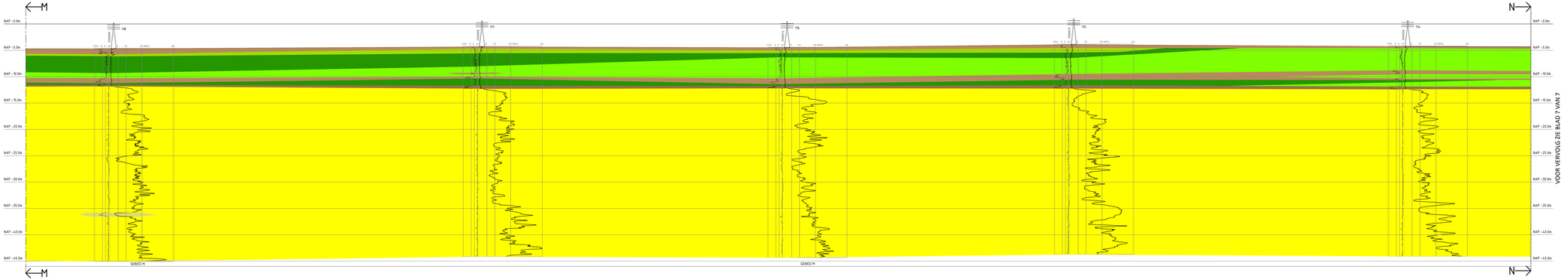

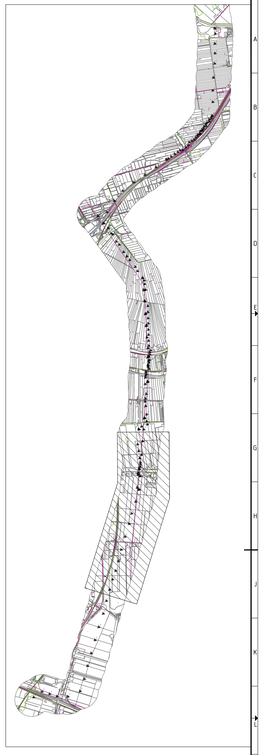

LEGENDA

- ZAND PLEISTOCEEN, LOKAAL SILTIG
- ZAND SILTIG KLEIIG
- BASISVEEN
- VEEN (LOKAAL VEENDUK, TOPLAAG)
- KLEI SILTIG, LOKAAL ZANDIG
- KLEI HUMEUS, LOKAAL ZANDIG
- KLEI ZANDIG
- KLEI SILTIG, DIEP / LEEM, LOKAAL VENIG

Combining Knowledge and Experience
bam COFELY FABRICOM
Randstad 380kV Noordring

P. de Jager — Uitgevoerd
A. Negrijtsen — Gecontroleerd

Definitief

Aanduiding: Geofeshisch lengteprofiel

01			
02			
03			
Rev.	Omschr.	Datum	Paraf

Schaal: VERT 1:200; HOR 1:500 | Format: A0 R

Datum: 2.1.06 van Tol — Controle: 02-10-2015

Project: Randstad 380kV Noordring

TenneT — Taking power further

Tekeningnummer: R3N-TEK-0116 ... 006

Aantal tekeningen: 1 — Schaal: —

VOOR VERVOLG ZIE BLAD 6 VAN 7

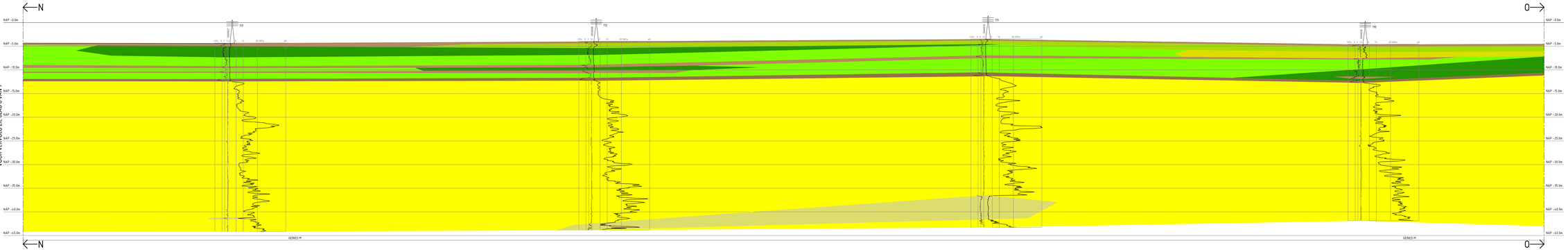

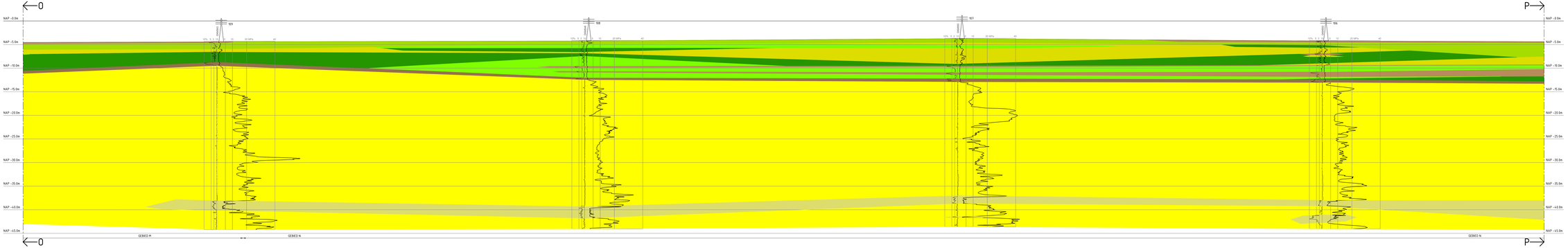

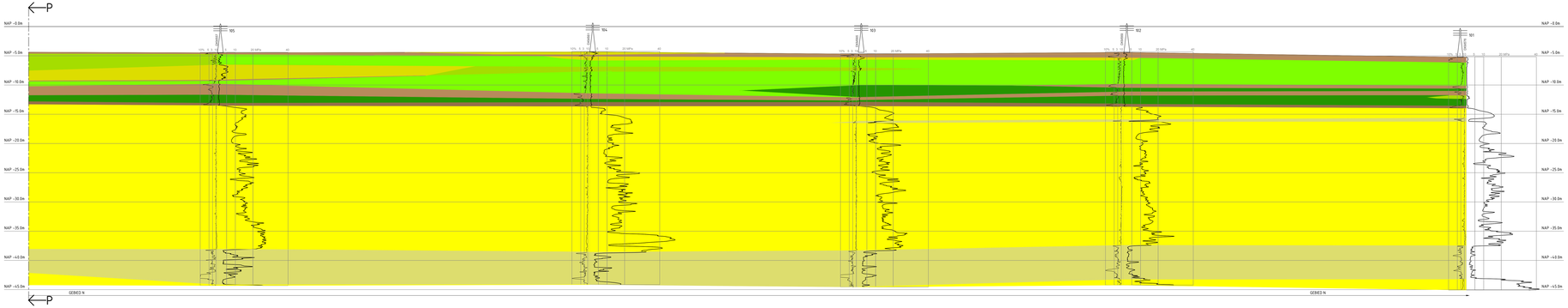

LEGENDA

- ZAND PLEISTOCEEN, LOKAAL SILTIG
- ZAND SILTIG KLEIIG
- BASISVEEN
- VEEN (LOKAAL VEENDUIN, TOPLAAG)
- KLEI SILTIG, LOKAAL ZANDIG
- KLEI HUMEUS, LOKAAL ZANDIG
- KLEI ZANDIG
- KLEI SILTIG, DIEP / LEEM, LOKAAL VENIG

Combining Knowledge and Experience
bam COFELY FABRICOM
Randstad 380kV Noordring

P. de Jager — A. Negrijtsen
Definitief — Geotechnisch lengteprofiel
Randstad 380kV Noordring
Schaal: VERT 1:200; HOR 1:500 — Formaat: A0/1
Datum: 2.1.06 van Tol — Datum: 22-10-2015
Tennet — Taking power further
Tekeningnummer: R3N-TEK-0116 ... 007
Revisie: 01

BIJLAGE 2 RESULTATEN ZETTINGSBEREKENINGEN OSP'S

Report for D-Settlement 9.3

Settlement Calculations
Developed by Deltares

Company:	BAM Infratechniek
Date of report:	3-10-2013
Time of report:	2:51:14
Date of calculation:	3-10-2013
Time of calculation:	2:50:59
Filename:	C:\..\OSP's\R3N_Perceel 2_OSP-154-0,20 m hoger-1,0 m overhoogte
Project identification:	Randstad 380 Noordring

1 Table of Contents

1 Table of Contents 2
2 Echo of the Input 3
2.1 Layer Boundaries 3
2.2 PL Lines 3
2.3 General Data 3
2.4 Soil Profiles 4
2.5 Soil Properties 4
2.6 Non-Uniform Loads 5
2.7 Verticals 5
3 Results per Vertical 6
3.1 Results for Vertical 1 (X = -36,00 m; Z = 0,00 m) 6
3.2 Results for Vertical 2 (X = -30,00 m; Z = 0,00 m) 6
3.3 Results for Vertical 3 (X = -19,50 m; Z = 0,00 m) 7
3.4 Results for Vertical 4 (X = -10,00 m; Z = 0,00 m) 8
3.5 Results for Vertical 5 (X = 0,00 m; Z = 0,00 m) 9
3.6 Results for Vertical 6 (X = 10,00 m; Z = 0,00 m) 10
3.7 Results for Vertical 7 (X = 15,00 m; Z = 0,00 m) 11
3.8 Results for Vertical 8 (X = 30,00 m; Z = 0,00 m) 12
3.9 Results for Vertical 9 (X = 36,00 m; Z = 0,00 m) 13
4 Settlements 14
4.1 Settlements 14
4.2 Residual Times 14
5 Warnings and errors 15

2 Echo of the Input

2.1 Layer Boundaries

Boundary number	Co-ordinates [m]				
12 - X -	-50,000	-37,000	37,000	50,000	
12 - Y -	-4,100	-4,100	-4,100	-4,100	
11 - X -	-50,000	-37,000	-37,000	-37,000	37,000
11 - Y -	-5,200	-5,200	-5,100	-4,100	-4,100
11 - X -	50,000				
11 - Y -	-4,100				
10 - X -	-50,000	-37,000	37,000	37,000	37,000
10 - Y -	-5,200	-5,200	-5,000	-4,800	-4,100
10 - X -	50,000				
10 - Y -	-4,100				
9 - X -	-50,000	-37,000	37,000	37,000	37,000
9 - Y -	-5,200	-5,200	-5,100	-5,000	-4,800
9 - X -	37,000	50,000			
9 - Y -	-4,100	-4,100			
8 - X -	-50,000	-37,000	37,000	37,000	50,000
8 - Y -	-5,200	-5,200	-5,100	-5,000	-5,000
7 - X -	-50,000	50,000			
7 - Y -	-5,500	-5,500			
6 - X -	-50,000	-37,500	-19,500	15,000	37,500
6 - Y -	-6,500	-6,500	-6,600	-6,800	-7,000
6 - X -	50,000				
6 - Y -	-7,000				
5 - X -	-50,000	-37,500	-19,500	15,000	37,500
5 - Y -	-7,400	-7,400	-7,500	-7,900	-8,000
5 - X -	50,000				
5 - Y -	-8,000				
4 - X -	-50,000	-37,500	-19,500	15,000	37,500
4 - Y -	-7,600	-7,600	-7,600	-9,500	-9,500
4 - X -	50,000				
4 - Y -	-9,500				
3 - X -	-50,000	-37,500	-19,500	15,000	37,500
3 - Y -	-10,000	-10,000	-10,100	-10,500	-10,600
3 - X -	50,000				
3 - Y -	-10,600				
2 - X -	-50,000	-37,500	-19,500	15,000	37,500
2 - Y -	-10,500	-10,500	-10,500	-10,800	-11,000
2 - X -	50,000				
2 - Y -	-11,000				
1 - X -	-50,000	-37,500	-19,500	15,000	37,500
1 - Y -	-11,400	-11,400	-11,200	-11,700	-11,800
1 - X -	50,000				
1 - Y -	-11,800				
0 - X -	-50,000	50,000			
0 - Y -	-20,000	-20,000			

2.2 PL Lines

PL line number	Co-ordinates [m]				
1 - X -	-50,000	50,000			
1 - Y -	-4,500	-4,500			
2 - X -	-50,000	50,000			
2 - Y -	-3,200	-3,200			

2.3 General Data

Soil model:	Koppejan
Consolidation model:	Darcy
Strain model:	Linear
Groundwater level:	Initial determined by PL-line number 1

Unit weight of water:	10,00 [kN/m³]
Stress distribution	
- Soil:	Buisman
- Loads:	Simulate
End of consolidation:	10950,00 [days]
No maintain profile	
Pc (initial):	Variable parallel to the initial effective stress
Pc (per step):	Automatic increased to the final effective stresses
Creep rate reference time:	1,000 [days]
No imaginary surface	
With submerging	
(only for non uniform loads)	
- Iteration stop criterium :	0,10 [m]
Load column width	
- Non-Uniform Loads :	1,00 [m]
- Trapezoidal Loads :	1,00 [m]

2.4 Soil Profiles

Layer number	Material name	PL-line top	PL-line bottom
12	veen toplaag	1	1
11	verbetering veen top...	1	1
10	verbetering veen	1	1
9	veen toplaag	1	1
8	veen-A4 (Z)	1	1
7	veen-A4 (Z)	1	1
6	klei humeus-A4 (N)	99	99
5	klei zandig-A4 (N)	99	99
4	zand kleiig-A4 (N)	99	99
3	klei humeus-A4 (N)	99	99
2	basisveen-A4 (N)	99	99
1	pleistoceen-A4 (N)	2	2

2.5 Soil Properties

Layer number	Drained	Unit weight	
		Unsaturated [kN/m³]	Saturated [kN/m³]
12	No	13,00	13,00
11	Yes	13,00	13,00
10	Yes	10,50	10,50
9	No	13,00	13,00
8	No	10,50	10,50
7	No	10,50	10,50
6	No	13,20	13,20
5	No	17,40	17,40
4	No	17,50	19,00
3	No	13,20	13,20
2	No	10,80	10,80
1	Yes	18,00	20,00

Layer number	Storage type	Vert. consolid. coefficient Cv [m²/s]	Vertical permeability [m/s]	Permeability strain mod. [m/s]	Initial vertical permeability [m/s]
12	Vert. cons.	7,70E-08	-	-	-
11	Vert. cons.	-	-	-	-
10	Vert. cons.	-	-	-	-
9	Vert. cons.	7,70E-08	-	-	-
8	Vert. cons.	3,00E-08	-	-	-
7	Vert. cons.	3,00E-08	-	-	-
6	Vert. cons.	7,70E-08	-	-	-
5	Vert. cons.	2,00E-07	-	-	-
4	Vert. cons.	5,50E-06	-	-	-
3	Vert. cons.	7,70E-08	-	-	-
2	Vert. cons.	4,70E-08	-	-	-
1	Vert. cons.	-	-	-	-

Layer number	Precons. pressure [kN/m²]	POP [kN/m²]	OCR [-]
12	-	10,00	-
11	-	-	1,00
10	-	-	1,00
9	-	10,00	-
8	-	10,00	-
7	-	10,00	-
6	-	10,00	-
5	-	10,00	-
4	-	-	1,00
3	-	10,00	-
2	-	10,00	-
1	-	-	1,00

Layer	Primary compr. coeff.		Secular compr. coef.		Swell constants	
number	Cp [-]	Cp' [-]	Cs [-]	Cs' [-]	Ap [-]	As [-]
12	3,10E+01	6,50E+00	1,45E+02	1,60E+01	3,10E+01	1,60E+01
11	8,00E+02	2,00E+02	1,00E+05	1,00E+05	1,00E+09	1,00E+09
10	8,00E+02	2,00E+02	1,00E+05	1,00E+05	1,00E+09	1,00E+09
9	3,10E+01	6,50E+00	1,45E+02	1,60E+01	3,10E+01	1,60E+01
8	3,32E+01	5,70E+00	1,14E+02	2,28E+01	3,32E+01	2,28E+01
7	3,32E+01	5,70E+00	1,14E+02	2,28E+01	3,32E+01	2,28E+01
6	3,10E+01	6,50E+00	1,45E+02	1,60E+01	3,10E+01	1,60E+01
5	7,06E+01	2,87E+01	3,21E+02	1,95E+02	7,06E+01	1,95E+02
4	4,00E+02	2,00E+02	1,00E+09	1,00E+09	4,00E+02	1,00E+09
3	3,10E+01	6,50E+00	1,45E+02	1,60E+01	3,10E+01	1,60E+01
2	5,14E+01	7,20E+00	1,11E+02	2,76E+01	5,14E+01	2,76E+01
1	1,80E+03	6,00E+02	1,00E+09	1,00E+09	1,00E+09	1,00E+09

2.6 Non-Uniform Loads

Load number	Time [days]	Unit weight Unsaturated [kN/m³]	Unit weight Saturated [kN/m³]
1	0	5,00	17,00
2	0	0,00	10,00
3	0	18,00	20,00
4	0	18,00	20,00

Load number	Co-ordinates [m]					
1 - X -	-37,00	-37,00	37,00	37,00		
1 - Y -	-4,10	-5,10	-5,10	-4,10		
2 - X -	-37,00	37,00				
2 - Y -	-4,10	-4,10				
3 - X -	-37,00	-37,00	37,00	37,00		
3 - Y -	-4,10	-3,85	-3,85	-4,10		
4 - X -	-37,00	-37,00	37,00	37,00		
4 - Y -	-4,10	-3,10	-3,10	-4,10		

2.7 Verticals

Vertical number	X co-ordinates [m]				
1 - 5	-36,000	-30,000	-19,500	-10,000	0,000
6 - 9	10,000	15,000	30,000	36,000	

Discretisation = 100

3 Results per Vertical

3.1 Results for Vertical 1 (X = -36,00 m; Z = 0,00 m)

Depth [m]	Effective Stress [kPa]	Hydraulic head [m]	Loading [kPa]	Settlement [m]
-4,100	4,501	-4,100	4,500	0,178
-4,200	5,800	-4,200	4,500	0,177
-4,300	7,099	-4,300	4,499	0,175
-4,400	8,394	-4,400	4,494	0,174
-4,500	9,683	-4,500	4,483	0,174
-4,600	9,964	-4,500	4,464	0,173
-4,649	10,097	-4,500	4,451	0,173
-4,700	10,235	-4,500	4,435	0,172
-4,800	10,496	-4,500	4,396	0,172
-4,900	10,750	-4,500	4,350	0,171
-5,000	10,997	-4,500	4,297	0,170
-5,100	17,795	-4,500	10,795	0,170
-5,197	18,027	-4,500	10,736	0,169
-5,197	18,027	-4,500	10,735	0,169
-5,198	18,027	-4,500	10,735	0,169
-5,199	18,027	-4,500	10,735	0,169
-5,199	18,027	-4,500	10,735	0,169
-5,349	18,004	-4,500	10,636	0,148
-5,500	17,966	-4,500	10,522	0,131
-5,500	17,966	-4,500	10,522	0,131
-6,004	17,660	-4,500	9,964	0,088
-6,508	17,240	-4,500	9,293	0,062
-6,508	17,240	-4,500	9,293	0,062
-6,958	16,954	-4,380	8,766	0,042
-7,408	16,768	-4,260	8,341	0,024
-7,408	16,768	-4,260	8,341	0,024
-7,504	17,143	-4,234	8,262	0,022
-7,600	17,522	-4,209	8,187	0,021
-7,600	17,522	-4,209	8,187	0,021
-8,204	20,951	-4,048	7,790	0,019
-8,804	24,455	-3,888	7,494	0,018
-9,408	28,051	-3,727	7,264	0,017
-10,008	31,671	-3,567	7,084	0,016
-10,008	31,671	-3,567	7,084	0,016
-10,254	31,739	-3,501	7,020	0,014
-10,500	31,812	-3,436	6,962	0,011
-10,500	31,812	-3,436	6,962	0,011
-10,942	30,894	-3,318	6,869	0,009
-11,383	29,988	-3,200	6,787	0,003
-11,383	29,988	-3,200	6,787	0,003
-12,092	36,960	-3,200	6,676	0,003
-13,092	46,834	-3,200	6,550	0,002
-14,092	56,735	-3,200	6,451	0,002
-15,092	66,655	-3,200	6,371	0,001
-15,692	72,614	-3,200	6,330	0,001
-16,400	79,654	-3,200	6,286	0,001
-17,400	89,601	-3,200	6,233	0,001
-18,400	99,555	-3,200	6,188	0,000
-19,400	109,516	-3,200	6,149	0,000
-20,000	115,495	-3,200	6,127	0,000

3.2 Results for Vertical 2 (X = -30,00 m; Z = 0,00 m)

Depth [m]	Effective Stress [kPa]	Hydraulic head [m]	Loading [kPa]	Settlement [m]
-4,100	4,501	-4,100	4,500	0,276
-4,200	5,800	-4,200	4,500	0,274
-4,300	7,100	-4,300	4,500	0,273
-4,400	8,400	-4,400	4,500	0,272
-4,500	9,700	-4,500	4,500	0,271
-4,600	10,000	-4,500	4,500	0,271
-4,641	10,122	-4,500	4,500	0,270
-4,700	10,300	-4,500	4,500	0,270
-4,800	10,600	-4,500	4,500	0,269
-4,900	10,900	-4,500	4,500	0,268
-5,000	11,200	-4,500	4,500	0,268
-5,100	18,219	-4,500	11,219	0,267
-5,181	18,462	-4,500	11,219	0,266
-5,181	18,462	-4,500	11,219	0,266
-5,186	18,464	-4,500	11,219	0,266
-5,191	18,467	-4,500	11,219	0,266
-5,191	18,467	-4,500	11,219	0,266
-5,345	18,544	-4,500	11,218	0,243
-5,500	18,620	-4,500	11,218	0,223
-5,500	18,620	-4,500	11,218	0,223
-6,021	18,876	-4,500	11,213	0,172
-6,542	19,126	-4,500	11,202	0,132
-6,542	19,126	-4,500	11,202	0,132
-6,992	19,326	-4,377	11,187	0,098
-7,442	19,519	-4,255	11,165	0,065
-7,442	19,519	-4,255	11,165	0,065
-7,521	19,884	-4,233	11,161	0,064
-7,600	20,249	-4,212	11,156	0,062
-7,600	20,250	-4,212	11,156	0,062
-8,221	24,098	-4,043	11,107	0,060
-8,821	27,801	-3,879	11,043	0,058
-9,442	31,615	-3,710	10,960	0,056
-10,042	35,286	-3,547	10,864	0,055
-10,042	35,286	-3,547	10,864	0,055
-10,271	35,355	-3,485	10,824	0,049
-10,500	35,423	-3,422	10,783	0,042
-10,500	35,423	-3,422	10,783	0,042
-10,908	34,560	-3,311	10,704	0,027
-11,317	33,692	-3,200	10,622	0,005
-11,317	33,693	-3,200	10,622	0,005
-12,058	40,952	-3,200	10,465	0,004
-13,058	50,732	-3,200	10,245	0,003
-14,058	60,510	-3,200	10,023	0,002
-15,058	70,293	-3,200	9,806	0,002
-15,658	76,167	-3,200	9,680	0,002
-16,400	83,432	-3,200	9,529	0,001
-17,400	93,239	-3,200	9,336	0,001
-18,400	103,058	-3,200	9,154	0,000
-19,400	112,889	-3,200	8,985	0,000
-20,000	118,793	-3,200	8,889	0,000

3.3 Results for Vertical 3 (X = -19,50 m; Z = 0,00 m)

Depth [m]	Effective Stress [kPa]	Hydraulic head [m]	Loading [kPa]	Settlement [m]
-4,100	4,501	-4,100	4,500	0,286
-4,200	5,800	-4,200	4,500	0,285
-4,300	7,100	-4,300	4,500	0,283
-4,400	8,400	-4,400	4,500	0,282
-4,500	9,700	-4,500	4,500	0,282

Depth [m]	Effective Stress [kPa]	Hydraulic head [m]	Loading [kPa]	Settlement [m]
-4,600	10,000	-4,500	4,500	0,281
-4,626	10,079	-4,500	4,500	0,281
-4,700	10,300	-4,500	4,500	0,280
-4,800	10,600	-4,500	4,500	0,279
-4,900	10,900	-4,500	4,500	0,279
-5,000	11,200	-4,500	4,500	0,278
-5,100	18,245	-4,500	11,245	0,277
-5,153	18,403	-4,500	11,245	0,277
-5,153	18,403	-4,500	11,245	0,277
-5,165	18,409	-4,500	11,245	0,277
-5,176	18,415	-4,500	11,245	0,277
-5,176	18,415	-4,500	11,245	0,277
-5,338	18,496	-4,500	11,245	0,252
-5,500	18,577	-4,500	11,245	0,231
-5,500	18,577	-4,500	11,245	0,231
-6,050	18,852	-4,500	11,245	0,178
-6,600	19,127	-4,500	11,245	0,135
-6,600	19,127	-4,500	11,245	0,135
-7,050	19,294	-4,373	11,245	0,101
-7,500	19,462	-4,246	11,244	0,067
-7,500	19,462	-4,246	11,244	0,067
-7,550	19,691	-4,232	11,244	0,066
-7,600	19,919	-4,217	11,244	0,065
-7,600	19,919	-4,217	11,244	0,065
-8,250	23,931	-4,034	11,242	0,062
-8,850	27,632	-3,864	11,239	0,061
-9,500	31,641	-3,680	11,235	0,059
-10,100	35,339	-3,511	11,229	0,058
-10,100	35,339	-3,511	11,229	0,058
-10,300	35,412	-3,454	11,226	0,050
-10,500	35,484	-3,398	11,224	0,042
-10,500	35,484	-3,398	11,224	0,042
-10,850	34,769	-3,299	11,219	0,027
-11,200	34,054	-3,200	11,213	0,005
-11,200	34,054	-3,200	11,213	0,005
-12,000	42,038	-3,200	11,196	0,004
-13,000	52,010	-3,200	11,168	0,003
-14,000	61,974	-3,200	11,132	0,003
-15,000	71,931	-3,200	11,089	0,002
-15,600	77,900	-3,200	11,059	0,002
-16,400	85,856	-3,200	11,014	0,001
-17,400	95,794	-3,200	10,952	0,001
-18,400	105,725	-3,200	10,883	0,001
-19,400	115,651	-3,200	10,809	0,000
-20,000	121,603	-3,200	10,761	0,000

3.4 Results for Vertical 4 (X = -10,00 m; Z = 0,00 m)

Depth [m]	Effective Stress [kPa]	Hydraulic head [m]	Loading [kPa]	Settlement [m]
-4,100	4,501	-4,100	4,500	0,302
-4,200	5,800	-4,200	4,500	0,301
-4,300	7,100	-4,300	4,500	0,300
-4,400	8,400	-4,400	4,500	0,299
-4,500	9,700	-4,500	4,500	0,298
-4,600	10,000	-4,500	4,500	0,297
-4,614	10,041	-4,500	4,500	0,297
-4,700	10,300	-4,500	4,500	0,296
-4,800	10,600	-4,500	4,500	0,296
-4,900	10,900	-4,500	4,500	0,295
-5,000	11,200	-4,500	4,500	0,294

Depth [m]	Effective Stress [kPa]	Hydraulic head [m]	Loading [kPa]	Settlement [m]
-5,100	18,274	-4,500	11,274	0,294
-5,127	18,355	-4,500	11,274	0,293
-5,127	18,355	-4,500	11,274	0,293
-5,145	18,364	-4,500	11,274	0,293
-5,164	18,373	-4,500	11,274	0,293
-5,164	18,373	-4,500	11,274	0,293
-5,332	18,457	-4,500	11,274	0,268
-5,500	18,541	-4,500	11,274	0,246
-5,500	18,541	-4,500	11,274	0,246
-6,078	18,830	-4,500	11,274	0,194
-6,655	19,118	-4,500	11,274	0,148
-6,655	19,118	-4,500	11,274	0,148
-7,133	19,321	-4,367	11,274	0,112
-7,610	19,523	-4,235	11,273	0,076
-7,610	19,523	-4,235	11,273	0,076
-7,867	20,709	-4,164	11,273	0,070
-8,123	21,895	-4,092	11,273	0,064
-8,123	21,895	-4,092	11,273	0,064
-8,667	25,277	-3,941	11,273	0,062
-9,167	28,388	-3,803	11,272	0,061
-9,710	31,769	-3,652	11,271	0,060
-10,210	34,880	-3,513	11,270	0,059
-10,210	34,880	-3,513	11,270	0,059
-10,396	34,958	-3,461	11,269	0,052
-10,583	35,037	-3,410	11,268	0,045
-10,583	35,037	-3,410	11,268	0,045
-10,960	34,290	-3,305	11,267	0,029
-11,338	33,542	-3,200	11,266	0,005
-11,338	33,542	-3,200	11,266	0,005
-12,069	40,850	-3,200	11,262	0,004
-13,069	50,842	-3,200	11,254	0,004
-14,069	60,833	-3,200	11,245	0,003
-15,069	70,820	-3,200	11,232	0,002
-15,669	76,811	-3,200	11,223	0,002
-16,400	84,109	-3,200	11,210	0,001
-17,400	94,088	-3,200	11,189	0,001
-18,400	104,064	-3,200	11,164	0,001
-19,400	114,035	-3,200	11,135	0,000
-20,000	120,016	-3,200	11,116	0,000

3.5 Results for Vertical 5 (X = 0,00 m; Z = 0,00 m)

Depth [m]	Effective Stress [kPa]	Hydraulic head [m]	Loading [kPa]	Settlement [m]
-4,100	4,501	-4,100	4,500	0,319
-4,200	5,800	-4,200	4,500	0,317
-4,300	7,100	-4,300	4,500	0,316
-4,400	8,400	-4,400	4,500	0,315
-4,500	9,700	-4,500	4,500	0,314
-4,600	10,000	-4,500	4,500	0,313
-4,700	10,300	-4,500	4,500	0,313
-4,800	10,600	-4,500	4,500	0,312
-4,900	10,900	-4,500	4,500	0,311
-5,000	11,200	-4,500	4,500	0,311
-5,100	18,303	-4,500	11,303	0,310
-5,100	18,303	-4,500	11,303	0,310
-5,125	18,315	-4,500	11,303	0,310
-5,150	18,328	-4,500	11,303	0,309
-5,150	18,328	-4,500	11,303	0,309
-5,325	18,415	-4,500	11,303	0,283
-5,500	18,502	-4,500	11,303	0,261

Depth [m]	Effective Stress [kPa]	Hydraulic head [m]	Loading [kPa]	Settlement [m]
-5,500	18,502	-4,500	11,303	0,261
-6,107	18,805	-4,500	11,303	0,210
-6,713	19,108	-4,500	11,303	0,162
-6,713	19,108	-4,500	11,303	0,162
-7,220	19,348	-4,362	11,302	0,123
-7,726	19,588	-4,224	11,302	0,085
-7,726	19,588	-4,224	11,302	0,085
-8,200	21,803	-4,095	11,302	0,074
-8,674	24,018	-3,965	11,302	0,064
-8,674	24,019	-3,965	11,302	0,064
-9,500	29,201	-3,740	11,301	0,062
-10,326	34,383	-3,515	11,300	0,060
-10,326	34,383	-3,515	11,300	0,060
-10,498	34,465	-3,468	11,300	0,055
-10,670	34,546	-3,422	11,300	0,048
-10,670	34,546	-3,422	11,300	0,048
-11,076	33,762	-3,311	11,299	0,031
-11,483	32,979	-3,200	11,298	0,005
-11,483	32,979	-3,200	11,298	0,005
-12,141	39,564	-3,200	11,296	0,004
-13,141	49,560	-3,200	11,291	0,004
-14,141	59,554	-3,200	11,286	0,003
-15,141	69,546	-3,200	11,278	0,002
-15,741	75,540	-3,200	11,272	0,002
-16,400	82,120	-3,200	11,265	0,001
-17,400	92,107	-3,200	11,252	0,001
-18,400	102,091	-3,200	11,236	0,001
-19,400	112,073	-3,200	11,218	0,000
-20,000	118,060	-3,200	11,205	0,000

3.6 Results for Vertical 6 (X = 10,00 m; Z = 0,00 m)

Depth [m]	Effective Stress [kPa]	Hydraulic head [m]	Loading [kPa]	Settlement [m]
-4,100	4,501	-4,100	4,500	0,334
-4,200	5,800	-4,200	4,500	0,333
-4,300	7,100	-4,300	4,500	0,331
-4,400	8,400	-4,400	4,500	0,331
-4,500	9,700	-4,500	4,500	0,330
-4,586	9,959	-4,500	4,500	0,329
-4,600	10,000	-4,500	4,500	0,329
-4,700	10,300	-4,500	4,500	0,328
-4,800	10,600	-4,500	4,500	0,328
-4,900	10,900	-4,500	4,500	0,327
-5,000	11,200	-4,500	4,500	0,326
-5,073	11,419	-4,500	4,500	0,326
-5,073	11,419	-4,500	4,500	0,326
-5,100	18,263	-4,500	11,330	0,326
-5,105	18,265	-4,500	11,330	0,325
-5,136	18,281	-4,500	11,330	0,325
-5,136	18,281	-4,500	11,330	0,325
-5,318	18,371	-4,500	11,330	0,298
-5,500	18,462	-4,500	11,330	0,276
-5,500	18,462	-4,500	11,330	0,276
-6,136	18,778	-4,500	11,330	0,226
-6,771	19,095	-4,500	11,330	0,175
-6,771	19,095	-4,500	11,330	0,175
-7,307	19,375	-4,356	11,330	0,133
-7,842	19,655	-4,213	11,330	0,093
-7,842	19,655	-4,213	11,330	0,093
-8,533	22,920	-4,028	11,329	0,077

Depth [m]	Effective Stress [kPa]	Hydraulic head [m]	Loading [kPa]	Settlement [m]
-9,225	26,184	-3,843	11,328	0,065
-9,225	26,184	-3,843	11,328	0,065
-9,833	30,032	-3,680	11,327	0,063
-10,442	33,879	-3,517	11,325	0,062
-10,442	33,879	-3,517	11,325	0,062
-10,599	33,961	-3,475	11,324	0,057
-10,757	34,043	-3,433	11,324	0,051
-10,757	34,043	-3,433	11,324	0,051
-11,192	33,224	-3,316	11,322	0,033
-11,628	32,406	-3,200	11,319	0,005
-11,628	32,406	-3,200	11,319	0,005
-12,614	42,261	-3,200	11,313	0,004
-13,614	52,252	-3,200	11,303	0,003
-14,614	62,240	-3,200	11,291	0,003
-15,614	72,224	-3,200	11,276	0,002
-15,814	74,221	-3,200	11,272	0,002
-16,800	84,064	-3,200	11,253	0,001
-17,800	94,040	-3,200	11,230	0,001
-18,800	104,013	-3,200	11,202	0,000
-19,800	113,982	-3,200	11,171	0,000
-20,000	115,975	-3,200	11,164	0,000

3.7 Results for Vertical 7 (X = 15,00 m; Z = 0,00 m)

Depth [m]	Effective Stress [kPa]	Hydraulic head [m]	Loading [kPa]	Settlement [m]
-4,100	4,501	-4,100	4,500	0,342
-4,200	5,800	-4,200	4,500	0,340
-4,300	7,100	-4,300	4,500	0,339
-4,400	8,400	-4,400	4,500	0,338
-4,500	9,700	-4,500	4,500	0,337
-4,580	9,939	-4,500	4,500	0,337
-4,600	10,000	-4,500	4,500	0,336
-4,700	10,300	-4,500	4,500	0,336
-4,800	10,600	-4,500	4,500	0,335
-4,900	10,900	-4,500	4,500	0,334
-5,000	11,200	-4,500	4,500	0,334
-5,059	11,378	-4,500	4,500	0,333
-5,059	11,378	-4,500	4,500	0,333
-5,095	11,396	-4,500	4,500	0,333
-5,100	18,241	-4,500	11,343	0,333
-5,130	18,256	-4,500	11,343	0,333
-5,130	18,256	-4,500	11,343	0,333
-5,315	18,348	-4,500	11,343	0,305
-5,500	18,440	-4,500	11,343	0,282
-5,500	18,440	-4,500	11,343	0,282
-6,150	18,762	-4,500	11,342	0,233
-6,800	19,086	-4,500	11,342	0,181
-6,800	19,086	-4,500	11,342	0,181
-7,350	19,385	-4,354	11,341	0,138
-7,900	19,685	-4,208	11,340	0,096
-7,900	19,685	-4,208	11,340	0,096
-8,700	23,481	-3,996	11,338	0,079
-9,500	27,277	-3,783	11,335	0,065
-9,500	27,277	-3,783	11,335	0,065
-10,000	30,448	-3,651	11,332	0,064
-10,500	33,618	-3,518	11,329	0,063
-10,500	33,618	-3,518	11,329	0,063
-10,650	33,699	-3,478	11,327	0,058
-10,800	33,780	-3,439	11,326	0,053
-10,800	33,780	-3,439	11,326	0,053

Depth [m]	Effective Stress [kPa]	Hydraulic head [m]	Loading [kPa]	Settlement [m]
-11,250	32,943	-3,319	11,322	0,034
-11,700	32,106	-3,200	11,317	0,005
-11,700	32,106	-3,200	11,317	0,005
-12,650	41,594	-3,200	11,305	0,004
-13,650	51,576	-3,200	11,288	0,003
-14,650	61,554	-3,200	11,265	0,003
-15,650	71,527	-3,200	11,238	0,002
-15,850	73,520	-3,200	11,232	0,002
-16,800	82,988	-3,200	11,200	0,001
-17,800	92,949	-3,200	11,161	0,001
-18,800	102,905	-3,200	11,116	0,000
-19,800	112,855	-3,200	11,067	0,000
-20,000	114,845	-3,200	11,056	0,000

3.8 Results for Vertical 8 (X = 30,00 m; Z = 0,00 m)

Depth [m]	Effective Stress [kPa]	Hydraulic head [m]	Loading [kPa]	Settlement [m]
-4,100	4,501	-4,100	4,500	0,334
-4,200	5,800	-4,200	4,500	0,332
-4,300	7,100	-4,300	4,500	0,331
-4,400	8,400	-4,400	4,500	0,330
-4,500	9,700	-4,500	4,500	0,329
-4,559	9,878	-4,500	4,500	0,329
-4,600	10,000	-4,500	4,500	0,328
-4,700	10,300	-4,500	4,500	0,328
-4,800	10,600	-4,500	4,500	0,327
-4,900	10,900	-4,500	4,500	0,326
-5,000	11,200	-4,500	4,500	0,326
-5,019	11,257	-4,500	4,500	0,325
-5,019	11,257	-4,500	4,500	0,325
-5,064	11,279	-4,500	4,500	0,325
-5,100	18,117	-4,500	11,320	0,325
-5,109	18,122	-4,500	11,320	0,325
-5,109	18,122	-4,500	11,320	0,325
-5,305	18,218	-4,500	11,319	0,295
-5,500	18,314	-4,500	11,318	0,272
-5,500	18,314	-4,500	11,318	0,272
-6,217	18,661	-4,500	11,310	0,220
-6,933	18,997	-4,499	11,289	0,163
-6,933	18,997	-4,499	11,289	0,163
-7,450	19,235	-4,360	11,263	0,124
-7,967	19,462	-4,222	11,226	0,085
-7,967	19,462	-4,222	11,226	0,085
-8,733	22,997	-4,015	11,149	0,068
-9,500	26,505	-3,809	11,045	0,055
-9,500	26,505	-3,809	11,045	0,055
-10,033	29,784	-3,666	10,958	0,054
-10,567	33,053	-3,522	10,861	0,053
-10,567	33,053	-3,522	10,861	0,053
-10,750	33,111	-3,473	10,826	0,049
-10,933	33,169	-3,424	10,790	0,044
-10,933	33,169	-3,424	10,790	0,044
-11,350	32,298	-3,312	10,704	0,028
-11,767	31,423	-3,200	10,616	0,005
-11,767	31,423	-3,200	10,616	0,005
-12,683	40,388	-3,200	10,414	0,004
-13,683	50,164	-3,200	10,190	0,003
-14,683	59,942	-3,200	9,968	0,002
-15,683	69,727	-3,200	9,753	0,002
-15,883	71,686	-3,200	9,712	0,002

Depth [m]	Effective Stress [kPa]	Hydraulic head [m]	Loading [kPa]	Settlement [m]
-16,800	80,667	-3,200	9,527	0,001
-17,800	90,476	-3,200	9,336	0,001
-18,800	100,298	-3,200	9,157	0,000
-19,800	110,132	-3,200	8,991	0,000
-20,000	112,100	-3,200	8,959	0,000

3.9 Results for Vertical 9 (X = 36,00 m; Z = 0,00 m)

Depth [m]	Effective Stress [kPa]	Hydraulic head [m]	Loading [kPa]	Settlement [m]
-4,100	4,501	-4,100	4,500	0,210
-4,200	5,800	-4,200	4,500	0,209
-4,300	7,099	-4,300	4,499	0,207
-4,400	8,394	-4,400	4,494	0,206
-4,500	9,683	-4,500	4,483	0,206
-4,551	9,828	-4,500	4,474	0,205
-4,600	9,964	-4,500	4,464	0,205
-4,700	10,235	-4,500	4,435	0,204
-4,800	10,496	-4,500	4,396	0,204
-4,900	10,750	-4,500	4,350	0,203
-5,000	10,997	-4,500	4,297	0,202
-5,003	11,003	-4,500	4,295	0,202
-5,003	11,003	-4,500	4,295	0,202
-5,052	11,000	-4,500	4,267	0,202
-5,100	17,614	-4,500	10,857	0,202
-5,101	17,614	-4,500	10,856	0,202
-5,101	17,614	-4,500	10,856	0,202
-5,301	17,588	-4,500	10,731	0,174
-5,500	17,540	-4,500	10,584	0,152
-5,500	17,540	-4,500	10,584	0,152
-6,243	17,027	-4,500	9,701	0,109
-6,987	16,488	-4,500	8,790	0,070
-6,987	16,488	-4,500	8,790	0,070
-7,490	16,272	-4,364	8,325	0,049
-7,993	16,162	-4,227	7,965	0,032
-7,993	16,162	-4,227	7,965	0,032
-8,747	19,301	-4,024	7,567	0,021
-9,500	22,553	-3,820	7,281	0,012
-9,500	22,553	-3,820	7,281	0,012
-10,047	25,834	-3,672	7,120	0,011
-10,593	29,143	-3,524	6,988	0,010
-10,593	29,143	-3,524	6,988	0,010
-10,790	29,199	-3,471	6,946	0,010
-10,987	29,257	-3,418	6,907	0,010
-10,987	29,257	-3,418	6,907	0,010
-11,390	28,415	-3,309	6,833	0,009
-11,793	27,581	-3,200	6,767	0,003
-11,793	27,582	-3,200	6,767	0,003
-12,697	36,491	-3,200	6,643	0,003
-13,697	46,383	-3,200	6,534	0,002
-14,697	56,296	-3,200	6,447	0,002
-15,697	66,224	-3,200	6,376	0,001
-15,897	68,211	-3,200	6,363	0,001
-16,800	77,192	-3,200	6,311	0,001
-17,800	87,142	-3,200	6,261	0,001
-18,800	97,099	-3,200	6,218	0,000
-19,800	107,062	-3,200	6,180	0,000
-20,000	109,055	-3,200	6,173	0,000

4 Settlements

4.1 Settlements

Vertical number	X co-ordinate [m]	Z co-ordinate [m]	Surface level [m]	Settlement [m]
1	-36,00	0,00	-4,10	0,178
2	-30,00	0,00	-4,10	0,276
3	-19,50	0,00	-4,10	0,286
4	-10,00	0,00	-4,10	0,302
5	0,00	0,00	-4,10	0,319
6	10,00	0,00	-4,10	0,334
7	15,00	0,00	-4,10	0,342
8	30,00	0,00	-4,10	0,334
9	36,00	0,00	-4,10	0,210

4.2 Residual Times

Vertical number	Time [days]	Settlement [m]	Part of final settlement [%]	Residual settlements [m]
1	365	0,183	102,718	-0,005
2	365	0,240	87,067	0,036
3	365	0,249	87,063	0,037
4	365	0,253	83,816	0,049
5	365	0,257	80,646	0,062
6	365	0,260	77,666	0,075
7	365	0,261	76,275	0,081
8	365	0,253	75,755	0,081
9	365	0,188	89,362	0,022

5 Warnings and errors

List of non-fatal warnings and errors generated during calculation.

1 Model Koppejan is not ideal for unloading (e.g. load removal, temporary dewatering, gradual submerging). If As is much larger than Cs', unloading will yield almost no effect on creep. Switch to the NEN-Bjerrum or abc Isotache model for improved predictions.

2 Non-uniform load [1]: Co-ordinate is below surface (2)

3 Non-uniform load [1]: Co-ordinate is below surface (3)

End of Report

Report for D-Settlement 9.3

Settlement Calculations
Developed by Deltares

Company:	BAM Infratechniek
Date of report:	3-10-2013
Time of report:	2:50:30
Date of calculation:	3-10-2013
Time of calculation:	2:50:15
Filename:	C:\..\OSP's\R3N_Perceel 2_OSP-153-0,20 m hoger-1,0 m overhoogte
Project identification:	Randstad 380 Noordring

1 Table of Contents

1 Table of Contents 2
2 Echo of the Input 3
2.1 Layer Boundaries 3
2.2 PL Lines 3
2.3 General Data 4
2.4 Soil Profiles 4
2.5 Soil Properties 4
2.6 Non-Uniform Loads 6
2.7 Verticals 6
3 Results per Vertical 7
3.1 Results for Vertical 1 (X = -36,00 m; Z = 0,00 m) 7
3.2 Results for Vertical 2 (X = -30,00 m; Z = 0,00 m) 7
3.3 Results for Vertical 3 (X = -17,00 m; Z = 0,00 m) 8
3.4 Results for Vertical 4 (X = -10,00 m; Z = 0,00 m) 9
3.5 Results for Vertical 5 (X = 0,00 m; Z = 0,00 m) 10
3.6 Results for Vertical 6 (X = 10,00 m; Z = 0,00 m) 11
3.7 Results for Vertical 7 (X = 18,00 m; Z = 0,00 m) 12
3.8 Results for Vertical 8 (X = 33,00 m; Z = 0,00 m) 13
3.9 Results for Vertical 9 (X = 36,00 m; Z = 0,00 m) 14
4 Settlements 16
4.1 Settlements 16
4.2 Residual Times 16
5 Warnings and errors 17

2 Echo of the Input

2.1 Layer Boundaries

Boundary number	Co-ordinates [m]				
17 - X -	-50,000	-37,000	18,000	33,000	37,000
17 - Y -	-1,700	-1,700	-1,700	-1,700	-1,700
17 - X -	50,000				
17 - Y -	-1,700				
16 - X -	-50,000	-37,000	-37,000	18,000	33,000
16 - Y -	-2,300	-2,300	-1,700	-1,700	-1,700
16 - X -	37,000	50,000			
16 - Y -	-1,700	-1,700			
15 - X -	-50,000	-37,000	-17,000	18,000	33,000
15 - Y -	-2,300	-2,300	-2,300	-2,300	-2,300
15 - X -	37,000	37,000	50,000		
15 - Y -	-2,300	-1,700	-1,700		
14 - X -	-50,000	-37,000	-37,000	37,000	37,000
14 - Y -	-2,300	-2,300	-2,650	-2,650	-2,300
14 - X -	37,000	50,000			
14 - Y -	-1,700	-1,700			
13 - X -	-50,000	-37,000	-37,000	37,000	37,000
13 - Y -	-2,300	-2,300	-2,650	-2,650	-2,300
13 - X -	50,000				
13 - Y -	-2,300				
12 - X -	-50,000	-17,000	18,000	33,000	50,000
12 - Y -	-3,800	-3,800	-3,800	-3,500	-3,500
11 - X -	-50,000	-17,000	18,000	33,000	50,000
11 - Y -	-6,500	-6,500	-6,500	-4,700	-4,700
10 - X -	-50,000	-17,000	18,000	33,000	50,000
10 - Y -	-6,500	-6,500	-6,800	-5,000	-5,000
9 - X -	-50,000	-17,000	18,000	33,000	50,000
9 - Y -	-6,500	-6,500	-6,800	-6,100	-6,100
8 - X -	-50,000	-17,000	18,000	33,000	50,000
8 - Y -	-6,500	-6,500	-6,800	-6,500	-6,500
7 - X -	-50,000	-17,000	18,000	33,000	50,000
7 - Y -	-6,500	-6,500	-7,500	-6,500	-6,500
6 - X -	-50,000	-17,000	10,632	18,000	33,000
6 - Y -	-7,800	-7,800	-7,879	-7,500	-6,500
6 - X -	50,000				
6 - Y -	-6,500				
5 - X -	-50,000	-17,000	10,632	18,000	33,000
5 - Y -	-9,300	-9,300	-7,879	-7,500	-6,500
5 - X -	50,000				
5 - Y -	-6,500				
4 - X -	-50,000	-17,000	10,632	18,000	33,000
4 - Y -	-9,300	-9,300	-7,879	-7,500	-7,500
4 - X -	50,000				
4 - Y -	-7,500				
3 - X -	-50,000	-17,000	10,632	18,000	33,000
3 - Y -	-9,300	-9,300	-7,879	-7,500	-8,500
3 - X -	50,000				
3 - Y -	-8,500				
2 - X -	-50,000	-17,000	18,000	33,000	50,000
2 - Y -	-10,600	-10,600	-10,700	-10,800	-10,800
1 - X -	-50,000	-17,000	18,000	33,000	50,000
1 - Y -	-11,500	-11,500	-11,700	-11,700	-11,700
0 - X -	-50,000	50,000			
0 - Y -	-20,000	-20,000			

2.2 PL Lines

PL line number	Co-ordinates [m]				
1 - X -	-50,000	50,000			

PL line number	Co-ordinates [m]				
1 - Y -	-2,100	-2,100			
2 - X -	-50,000	50,000			
2 - Y -	-3,000	-3,000			

2.3 General Data

Soil model:	Koppejan
Consolidation model:	Darcy
Strain model:	Linear
Groundwater level:	Initial determined by PL-line number 1
Unit weight of water:	10,00 [kN/m³]
Stress distribution	
- Soil:	Buisman
- Loads:	Simulate
End of consolidation:	10950,00 [days]
No maintain profile	
Pc (initial):	Variable parallel to the initial effective stress
Pc (per step):	Automatic increased to the final effective stresses
Creep rate reference time:	1,000 [days]
No imaginary surface	
With submerging	
(only for non uniform loads)	
- Iteration stop criterium :	0,10 [m]
Load column width	
- Non-Uniform Loads :	1,00 [m]
- Trapezoidal Loads :	1,00 [m]

2.4 Soil Profiles

Layer number	Material name	PL-line top	PL-line bottom
17	veen toplaag	1	1
16	verbetering veen top...	1	1
15	verbetering veen	1	1
14	veen toplaag	1	1
13	veen-A4 (Z)	1	1
12	klei siltig-A4 (N)	99	99
11	klei humeus-A4 (N)	99	99
10	klei siltig-A4 (N)	99	99
9	klei humeus-A4 (N)	99	99
8	klei siltig-A4 (N)	99	99
7	klei humeus-A4 (N)	99	99
6	klei siltig-A4 (N)	99	99
5	zand kleiig-A4 (N)	99	99
4	klei siltig-A4 (N)	99	99
3	klei humeus-A4 (N)	99	99
2	basisveen-A4 (N)	99	99
1	pleistoceen-A4 (N)	2	2

2.5 Soil Properties

Layer number	Drained	Unit weight	
		Unsaturated [kN/m³]	Saturated [kN/m³]
17	No	13,00	13,00
16	Yes	13,00	13,00
15	Yes	10,50	10,50
14	No	13,00	13,00
13	No	10,50	10,50
12	No	15,40	15,40
11	No	13,20	13,20
10	No	15,40	15,40
9	No	13,20	13,20
8	No	15,40	15,40
7	No	13,20	13,20
6	No	15,40	15,40

Layer number	Drained	Unit weight Unsaturated [kN/m³]	Unit weight Saturated [kN/m³]
5	No	17,50	19,00
4	No	15,40	15,40
3	No	13,20	13,20
2	No	10,80	10,80
1	Yes	18,00	20,00

Layer number	Storage type	Vert. consolid. coefficient Cv [m²/s]	Vertical permeability [m/s]	Permeability strain mod. [m/s]	Initial vertical permeability [m/s]
17	Vert. cons.	7,70E-08	-	-	-
16	Vert. cons.	-	-	-	-
15	Vert. cons.	-	-	-	-
14	Vert. cons.	7,70E-08	-	-	-
13	Vert. cons.	3,00E-08	-	-	-
12	Vert. cons.	9,40E-08	-	-	-
11	Vert. cons.	7,70E-08	-	-	-
10	Vert. cons.	9,40E-08	-	-	-
9	Vert. cons.	7,70E-08	-	-	-
8	Vert. cons.	9,40E-08	-	-	-
7	Vert. cons.	7,70E-08	-	-	-
6	Vert. cons.	9,40E-08	-	-	-
5	Vert. cons.	5,50E-06	-	-	-
4	Vert. cons.	9,40E-08	-	-	-
3	Vert. cons.	7,70E-08	-	-	-
2	Vert. cons.	4,70E-08	-	-	-
1	Vert. cons.	-	-	-	-

Layer number	Precons. pressure [kN/m²]	POP [kN/m²]	OCR [-]
17	-	10,00	-
16	-	-	1,00
15	-	-	1,00
14	-	10,00	-
13	-	10,00	-
12	-	10,00	-
11	-	10,00	-
10	-	10,00	-
9	-	10,00	-
8	-	10,00	-
7	-	10,00	-
6	-	10,00	-
5	-	-	1,00
4	-	10,00	-
3	-	10,00	-
2	-	10,00	-
1	-	-	1,00

Layer number	Primary compr. coeff. Cp [-]	Primary compr. coeff. Cp' [-]	Secular compr. coef. Cs [-]	Secular compr. coef. Cs' [-]	Swell constants Ap [-]	Swell constants As [-]
17	3,10E+01	6,50E+00	1,45E+02	1,60E+01	3,10E+01	1,60E+01
16	8,00E+02	2,00E+02	1,00E+05	1,00E+05	1,00E+09	1,00E+09
15	8,00E+02	2,00E+02	1,00E+05	1,00E+05	1,00E+09	1,00E+09
14	3,10E+01	6,50E+00	1,45E+02	1,60E+01	3,10E+01	1,60E+01
13	3,32E+01	5,70E+00	1,14E+02	2,28E+01	3,32E+01	2,28E+01
12	5,67E+01	1,38E+01	2,57E+02	8,98E+01	5,67E+01	8,98E+01
11	3,10E+01	6,50E+00	1,45E+02	1,60E+01	3,10E+01	1,60E+01
10	5,67E+01	1,38E+01	2,57E+02	8,98E+01	5,67E+01	8,98E+01
9	3,10E+01	6,50E+00	1,45E+02	1,60E+01	3,10E+01	1,60E+01
8	5,67E+01	1,38E+01	2,57E+02	8,98E+01	5,67E+01	8,98E+01
7	3,10E+01	6,50E+00	1,45E+02	1,60E+01	3,10E+01	1,60E+01
6	5,67E+01	1,38E+01	2,57E+02	8,98E+01	5,67E+01	8,98E+01
5	4,00E+02	2,00E+02	1,00E+09	1,00E+09	4,00E+02	1,00E+09
4	5,67E+01	1,38E+01	2,57E+02	8,98E+01	5,67E+01	8,98E+01

Layer number	Primary compr. coeff. Cp [-]	Primary compr. coeff. Cp' [-]	Secular compr. coef. Cs [-]	Secular compr. coef. Cs' [-]	Swell constants Ap [-]	Swell constants As [-]
3	3,10E+01	6,50E+00	1,45E+02	1,60E+01	3,10E+01	1,60E+01
2	5,14E+01	7,20E+00	1,11E+02	2,76E+01	5,14E+01	2,76E+01
1	1,80E+03	6,00E+02	1,00E+09	1,00E+09	1,00E+09	1,00E+09

2.6 Non-Uniform Loads

Load number	Time [days]	Unit weight Unsaturated [kN/m³]	Unit weight Saturated [kN/m³]
1	0	5,00	17,00
2	0	7,50	19,50
3	0	0,00	10,00
4	0	18,00	20,00
5	0	18,00	20,00

Load number	Co-ordinates [m]					
1 - X -	-37,00	-37,00	37,00	37,00		
1 - Y -	-1,70	-2,30	-2,30	-1,70		
2 - X -	-37,00	-37,00	37,00	37,00		
2 - Y -	-2,30	-2,65	-2,65	-2,30		
3 - X -	-37,00	37,00				
3 - Y -	-1,70	-1,70				
4 - X -	-37,00	-37,00	37,00	37,00		
4 - Y -	-1,70	-1,50	-1,50	-1,70		
5 - X -	-37,00	-37,00	37,00	37,00		
5 - Y -	-1,70	-0,70	-0,70	-1,70		

2.7 Verticals

Vertical number	X co-ordinates [m]				
1 - 5	-36,000	-30,000	-17,000	-10,000	0,000
6 - 9	10,000	18,000	33,000	36,000	

Discretisation = 100

3 Results per Vertical

3.1 Results for Vertical 1 (X = -36,00 m; Z = 0,00 m)

Depth [m]	Effective Stress [kPa]	Hydraulic head [m]	Loading [kPa]	Settlement [m]
-1,700	3,601	-1,700	3,600	0,182
-1,800	4,900	-1,800	3,600	0,181
-1,900	6,199	-1,900	3,599	0,180
-2,000	7,495	-2,000	3,595	0,179
-2,100	8,787	-2,100	3,587	0,178
-2,200	9,071	-2,100	3,571	0,177
-2,300	13,109	-2,100	7,309	0,176
-2,300	13,109	-2,100	7,309	0,176
-2,400	13,128	-2,100	7,278	0,176
-2,475	13,138	-2,100	7,251	0,175
-2,500	13,140	-2,100	7,240	0,175
-2,600	13,144	-2,100	7,194	0,174
-2,650	16,467	-2,100	10,492	0,174
-2,650	16,467	-2,100	10,492	0,174
-2,700	16,463	-2,100	10,463	0,166
-3,000	16,382	-2,100	10,235	0,126
-3,225	16,254	-2,100	9,996	0,104
-3,800	15,785	-2,099	9,243	0,072
-3,800	15,786	-2,099	9,243	0,072
-4,450	19,284	-2,175	8,474	0,057
-5,150	23,277	-2,257	7,872	0,047
-5,800	27,148	-2,332	7,474	0,039
-6,500	31,432	-2,414	7,162	0,033
-6,500	31,432	-2,414	7,162	0,033
-7,150	34,052	-2,490	6,943	0,025
-7,800	36,720	-2,566	6,771	0,019
-7,800	36,720	-2,566	6,771	0,019
-8,550	41,492	-2,654	6,614	0,014
-9,300	46,297	-2,742	6,490	0,010
-9,300	46,297	-2,742	6,490	0,010
-9,950	49,049	-2,818	6,401	0,005
-10,600	51,816	-2,894	6,325	0,004
-10,600	51,816	-2,894	6,325	0,004
-11,050	52,659	-2,947	6,279	0,004
-11,500	53,507	-3,000	6,237	0,002
-11,500	53,508	-3,000	6,237	0,002
-12,000	58,466	-3,000	6,196	0,002
-12,550	63,924	-3,000	6,154	0,002
-13,550	73,859	-3,000	6,089	0,001
-14,550	83,804	-3,000	6,034	0,001
-15,550	93,758	-3,000	5,988	0,001
-15,750	95,749	-3,000	5,979	0,001
-16,250	100,729	-3,000	5,959	0,001
-16,800	106,208	-3,000	5,938	0,001
-17,800	116,174	-3,000	5,904	0,000
-18,800	126,144	-3,000	5,874	0,000
-19,800	136,116	-3,000	5,846	0,000
-20,000	138,111	-3,000	5,841	0,000

3.2 Results for Vertical 2 (X = -30,00 m; Z = 0,00 m)

Depth [m]	Effective Stress [kPa]	Hydraulic head [m]	Loading [kPa]	Settlement [m]
-1,700	3,601	-1,700	3,600	0,261
-1,800	4,900	-1,800	3,600	0,260
-1,900	6,200	-1,900	3,600	0,258
-2,000	7,500	-2,000	3,600	0,258
-2,100	8,800	-2,100	3,600	0,257
-2,200	9,100	-2,100	3,600	0,256
-2,300	13,292	-2,100	7,492	0,255
-2,300	13,292	-2,100	7,492	0,255
-2,400	13,342	-2,100	7,492	0,254
-2,475	13,380	-2,100	7,492	0,254
-2,500	13,392	-2,100	7,492	0,254
-2,600	13,442	-2,100	7,492	0,253
-2,650	16,792	-2,100	10,817	0,252
-2,650	16,792	-2,100	10,817	0,252
-2,700	16,816	-2,100	10,817	0,244
-3,000	16,960	-2,099	10,816	0,201
-3,225	17,068	-2,099	10,814	0,177
-3,800	17,343	-2,099	10,807	0,135
-3,800	17,343	-2,099	10,807	0,135
-4,450	21,591	-2,174	10,790	0,115
-5,150	26,151	-2,255	10,756	0,100
-5,800	30,368	-2,331	10,707	0,088
-6,500	34,888	-2,413	10,632	0,078
-6,500	34,888	-2,413	10,632	0,078
-7,150	37,638	-2,488	10,544	0,061
-7,800	40,373	-2,564	10,439	0,047
-7,800	40,373	-2,564	10,439	0,047
-8,550	45,166	-2,652	10,301	0,039
-9,300	49,948	-2,741	10,152	0,033
-9,300	49,948	-2,741	10,152	0,033
-9,950	52,655	-2,817	10,016	0,025
-10,600	55,361	-2,893	9,877	0,021
-10,600	55,361	-2,893	9,877	0,021
-11,050	56,157	-2,947	9,780	0,015
-11,500	56,954	-3,000	9,684	0,003
-11,500	56,954	-3,000	9,684	0,003
-12,000	61,849	-3,000	9,579	0,003
-12,550	67,234	-3,000	9,464	0,003
-13,550	77,033	-3,000	9,263	0,002
-14,550	86,842	-3,000	9,072	0,002
-15,550	96,663	-3,000	8,893	0,001
-15,750	98,628	-3,000	8,858	0,001
-16,250	103,544	-3,000	8,774	0,001
-16,800	108,955	-3,000	8,685	0,001
-17,800	118,802	-3,000	8,532	0,001
-18,800	128,659	-3,000	8,389	0,000
-19,800	138,527	-3,000	8,257	0,000
-20,000	140,501	-3,000	8,231	0,000

3.3 Results for Vertical 3 (X = -17,00 m; Z = 0,00 m)

Depth [m]	Effective Stress [kPa]	Hydraulic head [m]	Loading [kPa]	Settlement [m]
-1,700	3,601	-1,700	3,600	0,282
-1,800	4,900	-1,800	3,600	0,280
-1,900	6,200	-1,900	3,600	0,279
-2,000	7,500	-2,000	3,600	0,278
-2,100	8,800	-2,100	3,600	0,277
-2,200	9,100	-2,100	3,600	0,276
-2,300	13,330	-2,100	7,530	0,276

Depth [m]	Effective Stress [kPa]	Hydraulic head [m]	Loading [kPa]	Settlement [m]
-2,300	13,330	-2,100	7,530	0,276
-2,400	13,380	-2,100	7,530	0,275
-2,475	13,418	-2,100	7,530	0,274
-2,500	13,430	-2,100	7,530	0,274
-2,600	13,480	-2,100	7,530	0,273
-2,650	16,830	-2,100	10,855	0,273
-2,650	16,830	-2,100	10,855	0,273
-2,700	16,854	-2,100	10,855	0,264
-3,000	16,999	-2,099	10,855	0,222
-3,225	17,108	-2,099	10,855	0,198
-3,800	17,389	-2,098	10,855	0,156
-3,800	17,389	-2,098	10,855	0,156
-4,450	21,654	-2,174	10,854	0,136
-5,150	26,246	-2,255	10,853	0,120
-5,800	30,510	-2,331	10,852	0,108
-6,500	35,102	-2,412	10,850	0,097
-6,500	35,102	-2,412	10,850	0,097
-7,150	37,938	-2,488	10,846	0,079
-7,800	40,773	-2,564	10,842	0,062
-7,800	40,773	-2,564	10,842	0,062
-8,550	45,696	-2,652	10,835	0,053
-9,300	50,619	-2,740	10,825	0,046
-9,300	50,619	-2,740	10,825	0,046
-9,950	53,452	-2,817	10,815	0,034
-10,600	56,284	-2,893	10,802	0,027
-10,600	56,284	-2,893	10,802	0,027
-11,050	57,167	-2,947	10,792	0,019
-11,500	58,051	-3,000	10,781	0,004
-11,500	58,051	-3,000	10,781	0,004
-12,000	63,037	-3,000	10,767	0,003
-12,550	68,520	-3,000	10,750	0,003
-13,550	78,484	-3,000	10,714	0,002
-14,550	88,442	-3,000	10,672	0,002
-15,550	98,395	-3,000	10,625	0,002
-15,750	100,384	-3,000	10,614	0,001
-16,250	105,358	-3,000	10,588	0,001
-16,800	110,827	-3,000	10,557	0,001
-17,800	120,767	-3,000	10,497	0,001
-18,800	130,703	-3,000	10,433	0,000
-19,800	140,634	-3,000	10,364	0,000
-20,000	142,620	-3,000	10,350	0,000

3.4 Results for Vertical 4 (X = -10,00 m; Z = 0,00 m)

Depth [m]	Effective Stress [kPa]	Hydraulic head [m]	Loading [kPa]	Settlement [m]
-1,700	3,601	-1,700	3,600	0,286
-1,800	4,900	-1,800	3,600	0,284
-1,900	6,200	-1,900	3,600	0,283
-2,000	7,500	-2,000	3,600	0,282
-2,100	8,800	-2,100	3,600	0,281
-2,200	9,100	-2,100	3,600	0,281
-2,300	13,338	-2,100	7,538	0,280
-2,300	13,338	-2,100	7,538	0,280
-2,400	13,388	-2,100	7,538	0,279
-2,475	13,425	-2,100	7,538	0,279
-2,500	13,438	-2,100	7,538	0,278
-2,600	13,488	-2,100	7,538	0,278
-2,650	16,838	-2,100	10,863	0,277
-2,650	16,838	-2,100	10,863	0,277
-2,700	16,862	-2,100	10,863	0,269

Depth [m]	Effective Stress [kPa]	Hydraulic head [m]	Loading [kPa]	Settlement [m]
-3,000	17,007	-2,099	10,863	0,226
-3,225	17,116	-2,099	10,863	0,202
-3,800	17,397	-2,098	10,863	0,160
-3,800	17,397	-2,098	10,863	0,160
-4,450	21,658	-2,174	10,863	0,140
-5,150	26,247	-2,254	10,862	0,124
-5,800	30,508	-2,330	10,862	0,112
-6,500	35,097	-2,411	10,861	0,101
-6,500	35,097	-2,411	10,861	0,101
-6,530	35,228	-2,414	10,861	0,100
-6,560	35,359	-2,418	10,861	0,099
-6,560	35,359	-2,418	10,861	0,099
-6,630	35,818	-2,426	10,861	0,098
-6,700	36,277	-2,434	10,861	0,097
-6,700	36,277	-2,434	10,861	0,097
-7,260	38,718	-2,499	10,860	0,082
-7,820	41,160	-2,564	10,858	0,067
-7,820	41,160	-2,564	10,858	0,067
-8,380	44,836	-2,629	10,857	0,061
-8,940	48,512	-2,695	10,854	0,055
-8,940	48,512	-2,695	10,854	0,055
-9,780	52,176	-2,793	10,849	0,039
-10,620	55,841	-2,891	10,843	0,027
-10,620	55,841	-2,891	10,843	0,027
-11,080	56,748	-2,946	10,839	0,019
-11,540	57,656	-3,000	10,834	0,004
-11,540	57,656	-3,000	10,834	0,004
-12,040	62,651	-3,000	10,828	0,003
-12,570	67,943	-3,000	10,821	0,003
-13,570	77,928	-3,000	10,806	0,002
-14,570	87,908	-3,000	10,786	0,002
-15,570	97,885	-3,000	10,763	0,002
-15,770	99,880	-3,000	10,758	0,001
-16,270	104,867	-3,000	10,745	0,001
-16,800	110,152	-3,000	10,730	0,001
-17,800	120,120	-3,000	10,698	0,001
-18,800	130,085	-3,000	10,663	0,000
-19,800	140,045	-3,000	10,623	0,000
-20,000	142,037	-3,000	10,615	0,000

3.5 Results for Vertical 5 (X = 0,00 m; Z = 0,00 m)

Depth [m]	Effective Stress [kPa]	Hydraulic head [m]	Loading [kPa]	Settlement [m]
-1,700	3,601	-1,700	3,600	0,291
-1,800	4,900	-1,800	3,600	0,289
-1,900	6,200	-1,900	3,600	0,288
-2,000	7,500	-2,000	3,600	0,287
-2,100	8,800	-2,100	3,600	0,286
-2,200	9,100	-2,100	3,600	0,286
-2,300	13,346	-2,100	7,546	0,285
-2,300	13,346	-2,100	7,546	0,285
-2,400	13,396	-2,100	7,546	0,284
-2,475	13,433	-2,100	7,546	0,283
-2,500	13,446	-2,100	7,546	0,283
-2,600	13,496	-2,100	7,546	0,282
-2,650	16,846	-2,100	10,871	0,282
-2,650	16,846	-2,100	10,871	0,282
-2,700	16,870	-2,100	10,871	0,274
-3,000	17,014	-2,099	10,871	0,231
-3,225	17,123	-2,099	10,871	0,207

Depth [m]	Effective Stress [kPa]	Hydraulic head [m]	Loading [kPa]	Settlement [m]
-3,800	17,403	-2,098	10,871	0,164
-3,800	17,403	-2,098	10,871	0,164
-4,450	21,658	-2,173	10,871	0,145
-5,150	26,240	-2,253	10,871	0,128
-5,800	30,496	-2,328	10,871	0,116
-6,500	35,079	-2,408	10,870	0,106
-6,500	35,079	-2,408	10,870	0,106
-6,573	35,396	-2,416	10,870	0,103
-6,646	35,713	-2,425	10,870	0,101
-6,646	35,713	-2,425	10,870	0,101
-6,816	36,826	-2,444	10,870	0,099
-6,986	37,939	-2,464	10,870	0,097
-6,986	37,939	-2,464	10,870	0,097
-7,417	39,817	-2,513	10,869	0,085
-7,849	41,695	-2,563	10,869	0,074
-7,849	41,695	-2,563	10,869	0,074
-8,137	43,587	-2,597	10,868	0,071
-8,426	45,479	-2,630	10,868	0,068
-8,426	45,479	-2,630	10,868	0,068
-8,937	47,707	-2,689	10,866	0,057
-9,537	50,321	-2,759	10,865	0,045
-10,049	52,550	-2,818	10,863	0,035
-10,649	55,166	-2,888	10,860	0,028
-10,649	55,166	-2,888	10,860	0,028
-11,123	56,101	-2,944	10,858	0,020
-11,597	57,037	-3,000	10,855	0,004
-11,597	57,037	-3,000	10,855	0,004
-12,097	62,034	-3,000	10,851	0,003
-12,599	67,044	-3,000	10,847	0,003
-13,599	77,034	-3,000	10,838	0,002
-14,599	87,022	-3,000	10,826	0,002
-15,599	97,008	-3,000	10,812	0,002
-15,799	99,005	-3,000	10,808	0,001
-16,299	103,996	-3,000	10,800	0,001
-16,800	109,001	-3,000	10,790	0,001
-17,800	118,980	-3,000	10,770	0,001
-18,800	128,956	-3,000	10,745	0,000
-19,800	138,929	-3,000	10,718	0,000
-20,000	140,923	-3,000	10,712	0,000

3.6 Results for Vertical 6 (X = 10,00 m; Z = 0,00 m)

Depth [m]	Effective Stress [kPa]	Hydraulic head [m]	Loading [kPa]	Settlement [m]
-1,700	3,601	-1,700	3,600	0,296
-1,800	4,900	-1,800	3,600	0,294
-1,900	6,200	-1,900	3,600	0,293
-2,000	7,500	-2,000	3,600	0,292
-2,100	8,800	-2,100	3,600	0,291
-2,200	9,100	-2,100	3,600	0,291
-2,300	13,354	-2,100	7,554	0,290
-2,300	13,354	-2,100	7,554	0,290
-2,400	13,404	-2,100	7,554	0,289
-2,475	13,442	-2,100	7,554	0,289
-2,500	13,454	-2,100	7,554	0,288
-2,600	13,504	-2,100	7,554	0,288
-2,650	16,854	-2,100	10,879	0,287
-2,650	16,854	-2,100	10,879	0,287
-2,700	16,878	-2,100	10,879	0,279
-3,000	17,021	-2,099	10,879	0,236
-3,225	17,129	-2,099	10,879	0,212

Depth [m]	Effective Stress [kPa]	Hydraulic head [m]	Loading [kPa]	Settlement [m]
-3,800	17,408	-2,098	10,879	0,169
-3,800	17,408	-2,098	10,879	0,169
-4,450	21,656	-2,172	10,879	0,150
-5,150	26,230	-2,251	10,878	0,134
-5,800	30,478	-2,325	10,877	0,122
-6,500	35,054	-2,405	10,876	0,111
-6,500	35,054	-2,405	10,876	0,111
-6,616	35,556	-2,418	10,876	0,107
-6,731	36,058	-2,431	10,876	0,104
-6,731	36,058	-2,431	10,876	0,104
-7,001	37,824	-2,462	10,875	0,100
-7,271	39,589	-2,493	10,875	0,097
-7,271	39,589	-2,493	10,875	0,097
-7,574	40,904	-2,527	10,874	0,089
-7,877	42,219	-2,562	10,873	0,082
-7,877	42,219	-2,562	10,873	0,082
-7,894	42,332	-2,564	10,873	0,082
-7,912	42,444	-2,566	10,873	0,081
-7,912	42,444	-2,566	10,873	0,081
-8,594	45,410	-2,645	10,870	0,066
-9,294	48,453	-2,725	10,866	0,051
-9,977	51,422	-2,804	10,861	0,037
-10,677	54,467	-2,885	10,856	0,028
-10,677	54,467	-2,885	10,856	0,028
-11,166	55,426	-2,942	10,851	0,020
-11,654	56,387	-3,000	10,845	0,004
-11,654	56,387	-3,000	10,845	0,004
-12,627	66,103	-3,000	10,832	0,003
-13,627	76,086	-3,000	10,815	0,002
-14,627	86,066	-3,000	10,795	0,002
-15,627	96,042	-3,000	10,771	0,002
-15,827	98,037	-3,000	10,766	0,001
-16,800	107,738	-3,000	10,738	0,001
-17,800	117,705	-3,000	10,706	0,001
-18,800	127,669	-3,000	10,670	0,000
-19,800	137,629	-3,000	10,630	0,000
-20,000	139,620	-3,000	10,621	0,000

3.7 Results for Vertical 7 (X = 18,00 m; Z = 0,00 m)

Depth [m]	Effective Stress [kPa]	Hydraulic head [m]	Loading [kPa]	Settlement [m]
-1,700	3,601	-1,700	3,600	0,293
-1,800	4,900	-1,800	3,600	0,292
-1,900	6,200	-1,900	3,600	0,290
-2,000	7,500	-2,000	3,600	0,289
-2,100	8,800	-2,100	3,600	0,289
-2,200	9,100	-2,100	3,600	0,288
-2,300	13,348	-2,100	7,548	0,287
-2,300	13,348	-2,100	7,548	0,287
-2,400	13,398	-2,100	7,548	0,286
-2,475	13,436	-2,100	7,548	0,286
-2,500	13,448	-2,100	7,548	0,286
-2,600	13,498	-2,100	7,548	0,285
-2,650	16,848	-2,100	10,873	0,284
-2,650	16,848	-2,100	10,873	0,284
-2,700	16,872	-2,100	10,873	0,276
-3,000	17,015	-2,099	10,873	0,233
-3,225	17,123	-2,099	10,873	0,209
-3,800	17,401	-2,098	10,872	0,167
-3,800	17,402	-2,098	10,872	0,167

Depth [m]	Effective Stress [kPa]	Hydraulic head [m]	Loading [kPa]	Settlement [m]
-4,450	21,644	-2,171	10,870	0,147
-5,150	26,213	-2,250	10,868	0,131
-5,800	30,455	-2,324	10,866	0,119
-6,500	35,023	-2,403	10,862	0,108
-6,500	35,023	-2,403	10,862	0,108
-6,650	35,672	-2,420	10,861	0,104
-6,800	36,322	-2,437	10,860	0,099
-6,800	36,322	-2,437	10,860	0,099
-7,150	38,606	-2,477	10,857	0,095
-7,500	40,891	-2,517	10,854	0,091
-7,500	40,891	-2,517	10,854	0,091
-8,300	44,353	-2,608	10,845	0,072
-9,100	47,816	-2,699	10,833	0,054
-9,900	51,279	-2,791	10,818	0,038
-10,700	54,740	-2,883	10,798	0,028
-10,700	54,740	-2,883	10,798	0,028
-11,200	55,709	-2,941	10,784	0,020
-11,700	56,679	-3,000	10,769	0,004
-11,700	56,679	-3,000	10,769	0,004
-12,650	66,144	-3,000	10,734	0,003
-13,650	76,102	-3,000	10,692	0,002
-14,650	86,053	-3,000	10,643	0,002
-15,650	95,998	-3,000	10,588	0,001
-15,850	97,986	-3,000	10,576	0,001
-16,800	107,428	-3,000	10,518	0,001
-17,800	117,361	-3,000	10,451	0,001
-18,800	127,290	-3,000	10,380	0,000
-19,800	137,215	-3,000	10,305	0,000
-20,000	139,199	-3,000	10,289	0,000

3.8 Results for Vertical 8 (X = 33,00 m; Z = 0,00 m)

Depth [m]	Effective Stress [kPa]	Hydraulic head [m]	Loading [kPa]	Settlement [m]
-1,700	3,601	-1,700	3,600	0,222
-1,800	4,900	-1,800	3,600	0,221
-1,900	6,200	-1,900	3,600	0,219
-2,000	7,500	-2,000	3,600	0,218
-2,100	8,800	-2,100	3,600	0,218
-2,200	9,100	-2,100	3,600	0,217
-2,300	13,224	-2,100	7,424	0,216
-2,300	13,224	-2,100	7,424	0,216
-2,400	13,274	-2,100	7,424	0,215
-2,475	13,311	-2,100	7,423	0,215
-2,500	13,323	-2,100	7,423	0,215
-2,600	13,373	-2,100	7,423	0,214
-2,650	16,722	-2,100	10,747	0,213
-2,650	16,722	-2,100	10,747	0,213
-2,700	16,747	-2,100	10,747	0,205
-3,000	16,890	-2,100	10,742	0,162
-3,075	16,925	-2,100	10,740	0,153
-3,500	17,117	-2,100	10,721	0,111
-3,500	17,117	-2,100	10,721	0,111
-4,100	20,956	-2,165	10,662	0,093
-4,700	24,749	-2,231	10,558	0,079
-4,700	24,749	-2,231	10,558	0,079
-4,850	25,359	-2,248	10,524	0,073
-5,000	25,968	-2,264	10,488	0,067
-5,000	25,968	-2,264	10,488	0,067
-5,550	29,386	-2,324	10,334	0,058
-6,100	32,778	-2,385	10,153	0,051

Depth [m]	Effective Stress [kPa]	Hydraulic head [m]	Loading [kPa]	Settlement [m]
-6,100	32,778	-2,385	10,153	0,051
-6,300	33,568	-2,406	10,083	0,046
-6,500	34,355	-2,428	10,011	0,042
-6,500	34,355	-2,428	10,011	0,042
-7,000	39,221	-2,483	9,828	0,041
-7,500	44,085	-2,538	9,643	0,040
-7,500	44,085	-2,538	9,643	0,040
-8,000	47,152	-2,593	9,461	0,037
-8,500	50,225	-2,648	9,285	0,033
-8,500	50,225	-2,648	9,285	0,033
-9,050	52,404	-2,708	9,100	0,027
-9,650	54,793	-2,774	8,910	0,020
-10,200	56,995	-2,835	8,747	0,015
-10,800	59,409	-2,901	8,582	0,012
-10,800	59,409	-2,901	8,582	0,012
-11,250	60,149	-2,950	8,466	0,010
-11,700	60,897	-3,000	8,357	0,003
-11,700	60,897	-3,000	8,357	0,003
-12,650	70,186	-3,000	8,146	0,002
-13,650	79,991	-3,000	7,951	0,002
-14,650	89,819	-3,000	7,779	0,001
-15,650	99,667	-3,000	7,627	0,001
-15,850	101,638	-3,000	7,598	0,001
-16,800	111,012	-3,000	7,472	0,001
-17,800	120,893	-3,000	7,353	0,000
-18,800	130,787	-3,000	7,247	0,000
-19,800	140,690	-3,000	7,150	0,000
-20,000	142,672	-3,000	7,132	0,000

3.9 Results for Vertical 9 (X = 36,00 m; Z = 0,00 m)

Depth [m]	Effective Stress [kPa]	Hydraulic head [m]	Loading [kPa]	Settlement [m]
-1,700	3,601	-1,700	3,600	0,172
-1,800	4,900	-1,800	3,600	0,170
-1,900	6,199	-1,900	3,599	0,169
-2,000	7,495	-2,000	3,595	0,168
-2,100	8,787	-2,100	3,587	0,167
-2,200	9,071	-2,100	3,571	0,167
-2,300	13,092	-2,100	7,292	0,166
-2,300	13,092	-2,100	7,292	0,166
-2,400	13,111	-2,100	7,261	0,165
-2,475	13,121	-2,100	7,233	0,165
-2,500	13,123	-2,100	7,223	0,164
-2,600	13,127	-2,100	7,177	0,164
-2,650	16,450	-2,100	10,475	0,163
-2,650	16,450	-2,100	10,475	0,163
-2,700	16,446	-2,100	10,446	0,155
-3,000	16,367	-2,100	10,218	0,115
-3,075	16,331	-2,100	10,145	0,107
-3,500	16,029	-2,100	9,631	0,071
-3,500	16,029	-2,100	9,631	0,071
-4,100	19,146	-2,166	8,850	0,057
-4,700	22,416	-2,231	8,222	0,047
-4,700	22,416	-2,231	8,222	0,047
-4,850	22,931	-2,248	8,093	0,044
-5,000	23,455	-2,264	7,973	0,041
-5,000	23,455	-2,264	7,973	0,041
-5,550	26,658	-2,325	7,603	0,035
-6,100	29,948	-2,385	7,319	0,029
-6,100	29,948	-2,385	7,319	0,029

Depth [m]	Effective Stress [kPa]	Hydraulic head [m]	Loading [kPa]	Settlement [m]
-6,300	30,721	-2,407	7,232	0,027
-6,500	31,501	-2,429	7,153	0,024
-6,500	31,501	-2,429	7,153	0,024
-7,000	36,376	-2,484	6,980	0,024
-7,500	41,282	-2,539	6,837	0,023
-7,500	41,282	-2,539	6,837	0,023
-8,000	44,411	-2,593	6,717	0,021
-8,500	47,558	-2,648	6,615	0,018
-8,500	47,558	-2,648	6,615	0,018
-9,050	49,826	-2,709	6,520	0,014
-9,650	52,317	-2,775	6,431	0,009
-10,200	54,611	-2,835	6,361	0,005
-10,800	57,124	-2,901	6,295	0,004
-10,800	57,124	-2,901	6,295	0,004
-11,250	57,936	-2,950	6,251	0,003
-11,700	58,751	-3,000	6,211	0,002
-11,700	58,751	-3,000	6,211	0,002
-12,650	68,178	-3,000	6,138	0,002
-13,650	78,115	-3,000	6,075	0,001
-14,650	88,061	-3,000	6,021	0,001
-15,650	98,015	-3,000	5,975	0,001
-15,850	100,007	-3,000	5,967	0,001
-16,800	109,470	-3,000	5,930	0,001
-17,800	119,436	-3,000	5,896	0,000
-18,800	129,406	-3,000	5,866	0,000
-19,800	139,379	-3,000	5,839	0,000
-20,000	141,374	-3,000	5,834	0,000

4 Settlements

4.1 Settlements

Vertical number	X co-ordinate [m]	Z co-ordinate [m]	Surface level [m]	Settlement [m]
1	-36,00	0,00	-1,70	0,182
2	-30,00	0,00	-1,70	0,261
3	-17,00	0,00	-1,70	0,282
4	-10,00	0,00	-1,70	0,286
5	0,00	0,00	-1,70	0,291
6	10,00	0,00	-1,70	0,296
7	18,00	0,00	-1,70	0,293
8	33,00	0,00	-1,70	0,222
9	36,00	0,00	-1,70	0,172

4.2 Residual Times

Vertical number	Time [days]	Settlement [m]	Part of final settlement [%]	Residual settlements [m]
1	365	0,169	92,868	0,013
2	365	0,214	81,750	0,048
3	365	0,220	78,185	0,061
4	365	0,221	77,214	0,065
5	365	0,221	76,105	0,070
6	365	0,222	74,927	0,074
7	365	0,221	75,377	0,072
8	365	0,202	91,088	0,020
9	365	0,171	99,339	0,001

5 Warnings and errors

List of non-fatal warnings and errors generated during calculation.

1 Model Koppejan is not ideal for unloading (e.g. load removal, temporary dewatering, gradual submerging). If As is much larger than Cs', unloading will yield almost no effect on creep. Switch to the NEN-Bjerrum or abc Isotache model for improved predictions.

2 Non-uniform load [1]: Co-ordinate is below surface (2)

3 Non-uniform load [1]: Co-ordinate is below surface (3)

4 Non-uniform load [2]: Co-ordinate is below surface (1)

5 Non-uniform load [2]: Co-ordinate is below surface (2)

6 Non-uniform load [2]: Co-ordinate is below surface (3)

7 Non-uniform load [2]: Co-ordinate is below surface (4)

End of Report

Report for D-Settlement 9.3

Settlement Calculations
Developed by Deltares

Company: BAM Infratechniek

Date of report: 3-10-2013
Time of report: 2:51:53

Date of calculation: 3-10-2013
Time of calculation: 2:51:39

Filename: C:\..\R3N_Perceel 2_OSP-YMM74 (B30F1105 en DKM1189 en B150)-0,2 m hoger-1,0 m overhoogte

Project identification: Randstad 380 Noordring

1 Table of Contents

1 Table of Contents 2
2 Echo of the Input 3
2.1 Layer Boundaries 3
2.2 PL Lines 3
2.3 General Data 3
2.4 Soil Profiles 4
2.5 Soil Properties 4
2.6 Non-Uniform Loads 5
2.7 Verticals 5
3 Results per Vertical 6
3.1 Results for Vertical 1 (X = -8,00 m; Z = 0,00 m) 6
3.2 Results for Vertical 2 (X = -5,00 m; Z = 0,00 m) 6
3.3 Results for Vertical 3 (X = 0,00 m; Z = 0,00 m) 7
3.4 Results for Vertical 4 (X = 5,00 m; Z = 0,00 m) 8
3.5 Results for Vertical 5 (X = 8,00 m; Z = 0,00 m) 9
4 Settlements 11
4.1 Settlements 11
4.2 Residual Times 11
5 Warnings and errors 12

2 Echo of the Input

2.1 Layer Boundaries

Boundary number	Co-ordinates [m]				
12 - X -	-30,000	-8,500	8,500	30,000	
12 - Y -	-1,300	-1,300	-1,300	-1,300	
11 - X -	-30,000	-8,500	-8,500	8,500	30,000
11 - Y -	-2,100	-2,100	-1,300	-1,300	-1,300
10 - X -	-30,000	-8,500	8,500	8,500	30,000
10 - Y -	-2,100	-2,100	-2,100	-1,300	-1,300
9 - X -	-30,000	-8,500	-8,500	8,500	8,500
9 - Y -	-2,100	-2,100	-2,250	-2,250	-2,100
9 - X -	8,500	30,000			
9 - Y -	-1,300	-1,300			
8 - X -	-30,000	-8,500	-8,500	8,500	8,500
8 - Y -	-2,100	-2,100	-2,250	-2,250	-2,100
8 - X -	30,000				
8 - Y -	-2,100				
7 - X -	-30,000	30,000			
7 - Y -	-4,100	-4,100			
6 - X -	-30,000	30,000			
6 - Y -	-5,500	-5,500			
5 - X -	-30,000	30,000			
5 - Y -	-7,700	-7,700			
4 - X -	-30,000	30,000			
4 - Y -	-8,000	-8,000			
3 - X -	-30,000	30,000			
3 - Y -	-10,000	-10,000			
2 - X -	-30,000	30,000			
2 - Y -	-11,500	-11,500			
1 - X -	-30,000	30,000			
1 - Y -	-12,300	-12,300			
0 - X -	-30,000	30,000			
0 - Y -	-20,000	-20,000			

2.2 PL Lines

PL line number	Co-ordinates [m]				
1 - X -	-30,000	30,000			
1 - Y -	-1,700	-1,700			
2 - X -	-30,000	30,000			
2 - Y -	-2,500	-2,500			

2.3 General Data

Soil model:	Koppejan
Consolidation model:	Darcy
Strain model:	Linear
Groundwater level:	Initial determined by PL-line number 1
Unit weight of water:	10,00 [kN/m³]
Stress distribution	
- Soil:	Buisman
- Loads:	Simulate
End of consolidation:	10950,00 [days]
No maintain profile	
Pc (initial):	Variable parallel to the initial effective stress
Pc (per step):	Automatic increased to the final effective stresses
Creep rate reference time:	1,000 [days]
No imaginary surface	
With submerging	
(only for non uniform loads)	
- Iteration stop criterium :	0,10 [m]
Load column width	

- Non-Uniform Loads :	1,00 [m]
- Trapezoidal Loads :	1,00 [m]

2.4 Soil Profiles

Layer number	Material name	PL-line top	PL-line bottom
12	veen toplaag	1	1
11	verbetering veen top...	1	1
10	verbetering veen	1	1
9	veen toplaag	1	1
8	veen-A4 (Z)	1	1
7	klei humeus-A4 (N)	99	99
6	klei siltig-A4 (N)	99	99
5	klei humeus-A4 (N)	99	99
4	klei siltig-A4 (N)	99	99
3	klei humeus-A4 (N)	99	99
2	basisveen-A4 (N)	99	99
1	pleistoceen-A4 (N)	2	2

2.5 Soil Properties

Layer number	Drained	Unit weight	
		Unsaturated [kN/m³]	Saturated [kN/m³]
12	No	13,00	13,00
11	Yes	13,00	13,00
10	Yes	10,50	10,50
9	No	13,00	13,00
8	No	10,50	10,50
7	No	13,20	13,20
6	No	15,40	15,40
5	No	13,20	13,20
4	No	15,40	15,40
3	No	13,20	13,20
2	No	10,80	10,80
1	Yes	18,00	20,00

Layer number	Storage type	Vert. consolid. coefficient Cv [m²/s]	Vertical permeability [m/s]	Permeability strain mod. [m/s]	Initial vertical permeability [m/s]
12	Vert. cons.	7,70E-08	-	-	-
11	Vert. cons.	-	-	-	-
10	Vert. cons.	-	-	-	-
9	Vert. cons.	7,70E-08	-	-	-
8	Vert. cons.	3,00E-08	-	-	-
7	Vert. cons.	7,70E-08	-	-	-
6	Vert. cons.	9,40E-08	-	-	-
5	Vert. cons.	7,70E-08	-	-	-
4	Vert. cons.	9,40E-08	-	-	-
3	Vert. cons.	7,70E-08	-	-	-
2	Vert. cons.	4,70E-08	-	-	-
1	Vert. cons.	-	-	-	-

Layer number	Precons. pressure [kN/m²]	POP [kN/m²]	OCR [-]
12	-	10,00	-
11	-	-	1,00
10	-	-	1,00
9	-	10,00	-
8	-	10,00	-
7	-	10,00	-
6	-	10,00	-
5	-	10,00	-
4	-	10,00	-
3	-	10,00	-

Layer number	Precons. pressure [kN/m²]	POP [kN/m²]	OCR [-]
2	-	10,00	-
1	-	-	1,00

Layer number	Primary compr. coeff.		Secular compr. coef.		Swell constants	
	Cp [-]	Cp' [-]	Cs [-]	Cs' [-]	Ap [-]	As [-]
12	3,10E+01	6,50E+00	1,45E+02	1,60E+01	3,10E+01	1,60E+01
11	8,00E+02	2,00E+02	1,00E+05	1,00E+05	1,00E+09	1,00E+09
10	8,00E+02	2,00E+02	1,00E+05	1,00E+05	1,00E+09	1,00E+09
9	3,10E+01	6,50E+00	1,45E+02	1,60E+01	3,10E+01	1,60E+01
8	3,32E+01	5,70E+00	1,14E+02	2,28E+01	3,32E+01	2,28E+01
7	3,10E+01	6,50E+00	1,45E+02	1,60E+01	3,10E+01	1,60E+01
6	5,67E+01	1,38E+01	2,57E+02	8,98E+01	5,67E+01	8,98E+01
5	3,10E+01	6,50E+00	1,45E+02	1,60E+01	3,10E+01	1,60E+01
4	5,67E+01	1,38E+01	2,57E+02	8,98E+01	5,67E+01	8,98E+01
3	3,10E+01	6,50E+00	1,45E+02	1,60E+01	3,10E+01	1,60E+01
2	5,14E+01	7,20E+00	1,11E+02	2,76E+01	5,14E+01	2,76E+01
1	1,80E+03	6,00E+02	1,00E+09	1,00E+09	1,00E+09	1,00E+09

2.6 Non-Uniform Loads

Load number	Time [days]	Unit weight	
		Unsaturated [kN/m³]	Saturated [kN/m³]
1	0	5,00	17,00
2	0	7,50	19,50
3	0	0,00	10,00
4	0	18,00	20,00
5	0	18,00	20,00

Load number	Co-ordinates [m]					
1 - X -	-8,50	-8,50	8,50	8,50		
1 - Y -	-1,30	-2,10	-2,10	-1,30		
2 - X -	-8,50	-8,50	8,50	8,50		
2 - Y -	-2,10	-2,25	-2,25	-2,10		
3 - X -	-8,50	8,50				
3 - Y -	-1,30	-1,30				
4 - X -	-8,50	-8,50	8,50	8,50		
4 - Y -	-1,30	-1,10	-1,10	-1,30		
5 - X -	-8,50	-8,50	8,50	8,50		
5 - Y -	-1,30	-0,30	-0,30	-1,30		

2.7 Verticals

Vertical number	X co-ordinates [m]				
1 - 5	-8,000	-5,000	0,000	5,000	8,000

Discretisation = 100

3 Results per Vertical

3.1 Results for Vertical 1 (X = -8,00 m; Z = 0,00 m)

Depth [m]	Effective Stress [kPa]	Hydraulic head [m]	Loading [kPa]	Settlement [m]
-1,300	3,601	-1,300	3,600	0,172
-1,400	4,899	-1,400	3,599	0,170
-1,500	6,187	-1,500	3,587	0,169
-1,600	7,448	-1,600	3,548	0,168
-1,700	8,680	-1,700	3,480	0,167
-1,800	8,891	-1,700	3,391	0,166
-1,900	9,092	-1,700	3,292	0,166
-2,000	9,293	-1,700	3,193	0,165
-2,100	14,644	-1,700	8,244	0,164
-2,100	14,644	-1,700	8,244	0,164
-2,175	14,614	-1,700	8,177	0,164
-2,200	14,604	-1,700	8,154	0,164
-2,250	16,007	-1,700	9,532	0,163
-2,250	16,007	-1,700	9,532	0,163
-2,300	15,978	-1,700	9,480	0,157
-2,500	15,769	-1,699	9,177	0,136
-3,175	14,689	-1,698	7,775	0,107
-4,100	14,124	-1,696	6,765	0,068
-4,100	14,124	-1,696	6,765	0,068
-4,800	16,667	-1,764	6,389	0,048
-5,500	19,351	-1,832	6,153	0,036
-5,500	19,351	-1,832	6,153	0,036
-6,100	23,031	-1,890	6,010	0,029
-6,600	26,125	-1,939	5,916	0,025
-7,100	29,235	-1,988	5,839	0,022
-7,700	32,982	-2,046	5,760	0,018
-7,700	32,982	-2,046	5,760	0,018
-7,850	33,591	-2,061	5,742	0,016
-8,000	34,201	-2,076	5,725	0,015
-8,000	34,201	-2,076	5,725	0,015
-9,000	40,480	-2,174	5,622	0,009
-10,000	46,776	-2,273	5,531	0,005
-10,000	46,776	-2,273	5,531	0,005
-10,750	49,850	-2,346	5,467	0,001
-11,500	52,927	-2,420	5,404	0,001
-11,500	52,927	-2,420	5,404	0,001
-11,900	53,612	-2,460	5,370	0,001
-12,300	54,297	-2,500	5,337	0,002
-12,300	54,297	-2,500	5,337	0,002
-13,150	62,724	-2,500	5,264	0,001
-14,150	72,637	-2,500	5,177	0,001
-15,150	82,547	-2,500	5,087	0,001
-16,150	92,455	-2,500	4,995	0,001
-17,000	100,875	-2,500	4,915	0,000
-18,000	110,780	-2,500	4,820	0,000
-19,000	120,683	-2,500	4,723	0,000
-20,000	130,586	-2,500	4,626	0,000

3.2 Results for Vertical 2 (X = -5,00 m; Z = 0,00 m)

Depth [m]	Effective Stress [kPa]	Hydraulic head [m]	Loading [kPa]	Settlement [m]
-1,300	3,601	-1,300	3,600	0,261

Depth [m]	Effective Stress [kPa]	Hydraulic head [m]	Loading [kPa]	Settlement [m]
-1,400	4,900	-1,400	3,600	0,260
-1,500	6,200	-1,500	3,600	0,258
-1,600	7,500	-1,600	3,600	0,257
-1,700	8,800	-1,700	3,600	0,257
-1,800	9,100	-1,700	3,600	0,256
-1,900	9,399	-1,700	3,599	0,255
-2,000	9,699	-1,700	3,599	0,254
-2,100	15,292	-1,700	8,892	0,254
-2,100	15,292	-1,700	8,892	0,254
-2,175	15,329	-1,700	8,891	0,253
-2,200	15,341	-1,700	8,891	0,253
-2,250	16,790	-1,700	10,315	0,253
-2,250	16,790	-1,700	10,315	0,253
-2,300	16,810	-1,700	10,315	0,245
-2,500	16,891	-1,698	10,311	0,218
-3,175	17,152	-1,695	10,269	0,167
-4,100	17,416	-1,691	10,107	0,114
-4,100	17,416	-1,691	10,107	0,114
-4,800	20,119	-1,758	9,895	0,083
-5,500	22,772	-1,826	9,629	0,059
-5,500	22,772	-1,826	9,629	0,059
-6,100	26,346	-1,884	9,381	0,050
-6,600	29,321	-1,933	9,170	0,044
-7,100	32,301	-1,982	8,962	0,038
-7,700	35,886	-2,041	8,719	0,033
-7,700	35,886	-2,041	8,719	0,033
-7,850	36,454	-2,055	8,660	0,031
-8,000	37,023	-2,070	8,601	0,029
-8,000	37,023	-2,070	8,601	0,029
-9,000	43,043	-2,169	8,231	0,021
-10,000	49,104	-2,269	7,892	0,015
-10,000	49,104	-2,269	7,892	0,015
-10,750	52,013	-2,344	7,657	0,008
-11,500	54,939	-2,418	7,435	0,007
-11,500	54,939	-2,418	7,435	0,007
-11,900	55,552	-2,459	7,321	0,007
-12,300	56,171	-2,500	7,211	0,002
-12,300	56,171	-2,500	7,211	0,002
-13,150	64,446	-2,500	6,986	0,002
-14,150	74,196	-2,500	6,736	0,001
-15,150	83,960	-2,500	6,500	0,001
-16,150	93,736	-2,500	6,276	0,001
-17,000	102,055	-2,500	6,095	0,001
-18,000	111,851	-2,500	5,891	0,000
-19,000	121,657	-2,500	5,697	0,000
-20,000	131,472	-2,500	5,512	0,000

3.3 Results for Vertical 3 (X = 0,00 m; Z = 0,00 m)

Depth [m]	Effective Stress [kPa]	Hydraulic head [m]	Loading [kPa]	Settlement [m]
-1,300	3,601	-1,300	3,600	0,287
-1,400	4,900	-1,400	3,600	0,285
-1,500	6,200	-1,500	3,600	0,284
-1,600	7,500	-1,600	3,600	0,283
-1,700	8,800	-1,700	3,600	0,282
-1,800	9,100	-1,700	3,600	0,281
-1,900	9,400	-1,700	3,600	0,281
-2,000	9,700	-1,700	3,600	0,280
-2,100	15,343	-1,700	8,943	0,279
-2,100	15,343	-1,700	8,943	0,279

Depth [m]	Effective Stress [kPa]	Hydraulic head [m]	Loading [kPa]	Settlement [m]
-2,175	15,381	-1,700	8,943	0,279
-2,200	15,393	-1,700	8,943	0,278
-2,250	16,843	-1,700	10,368	0,278
-2,250	16,843	-1,700	10,368	0,278
-2,300	16,863	-1,700	10,368	0,270
-2,500	16,947	-1,698	10,368	0,244
-3,175	17,242	-1,694	10,363	0,194
-4,100	17,646	-1,690	10,343	0,137
-4,100	17,646	-1,690	10,343	0,137
-4,800	20,525	-1,758	10,309	0,102
-5,500	23,386	-1,825	10,252	0,075
-5,500	23,386	-1,825	10,252	0,075
-6,100	27,136	-1,884	10,180	0,065
-6,600	30,246	-1,932	10,104	0,057
-7,100	33,343	-1,981	10,013	0,051
-7,700	37,042	-2,040	9,885	0,045
-7,700	37,042	-2,040	9,885	0,045
-7,850	37,634	-2,054	9,850	0,042
-8,000	38,225	-2,069	9,814	0,039
-8,000	38,225	-2,069	9,814	0,039
-9,000	44,349	-2,168	9,545	0,031
-10,000	50,446	-2,268	9,241	0,023
-10,000	50,446	-2,268	9,241	0,023
-10,750	53,348	-2,343	8,997	0,016
-11,500	56,244	-2,418	8,745	0,013
-11,500	56,244	-2,418	8,745	0,013
-11,900	56,838	-2,459	8,610	0,010
-12,300	57,433	-2,500	8,473	0,002
-12,300	57,433	-2,500	8,473	0,002
-13,150	65,645	-2,500	8,185	0,002
-14,150	75,311	-2,500	7,851	0,002
-15,150	84,988	-2,500	7,528	0,001
-16,150	94,678	-2,500	7,218	0,001
-17,000	102,926	-2,500	6,966	0,001
-18,000	112,644	-2,500	6,684	0,000
-19,000	122,377	-2,500	6,417	0,000
-20,000	132,126	-2,500	6,166	0,000

3.4 Results for Vertical 4 (X = 5,00 m; Z = 0,00 m)

Depth [m]	Effective Stress [kPa]	Hydraulic head [m]	Loading [kPa]	Settlement [m]
-1,300	3,601	-1,300	3,600	0,261
-1,400	4,900	-1,400	3,600	0,260
-1,500	6,200	-1,500	3,600	0,258
-1,600	7,500	-1,600	3,600	0,257
-1,700	8,800	-1,700	3,600	0,257
-1,800	9,100	-1,700	3,600	0,256
-1,900	9,399	-1,700	3,599	0,255
-2,000	9,699	-1,700	3,599	0,254
-2,100	15,292	-1,700	8,892	0,254
-2,100	15,292	-1,700	8,892	0,254
-2,175	15,329	-1,700	8,891	0,253
-2,200	15,341	-1,700	8,891	0,253
-2,250	16,790	-1,700	10,315	0,253
-2,250	16,790	-1,700	10,315	0,253
-2,300	16,810	-1,700	10,315	0,245
-2,500	16,891	-1,698	10,311	0,218
-3,175	17,152	-1,695	10,269	0,167
-4,100	17,416	-1,691	10,107	0,114
-4,100	17,416	-1,691	10,107	0,114

Depth [m]	Effective Stress [kPa]	Hydraulic head [m]	Loading [kPa]	Settlement [m]
-4,800	20,119	-1,758	9,895	0,083
-5,500	22,772	-1,826	9,629	0,059
-5,500	22,772	-1,826	9,629	0,059
-6,100	26,346	-1,884	9,381	0,050
-6,600	29,321	-1,933	9,170	0,044
-7,100	32,301	-1,982	8,962	0,038
-7,700	35,886	-2,041	8,719	0,033
-7,700	35,886	-2,041	8,719	0,033
-7,850	36,454	-2,055	8,660	0,031
-8,000	37,023	-2,070	8,601	0,029
-8,000	37,023	-2,070	8,601	0,029
-9,000	43,043	-2,169	8,231	0,021
-10,000	49,104	-2,269	7,892	0,015
-10,000	49,104	-2,269	7,892	0,015
-10,750	52,013	-2,344	7,657	0,008
-11,500	54,939	-2,418	7,435	0,007
-11,500	54,939	-2,418	7,435	0,007
-11,900	55,552	-2,459	7,321	0,007
-12,300	56,171	-2,500	7,211	0,002
-12,300	56,171	-2,500	7,211	0,002
-13,150	64,446	-2,500	6,986	0,002
-14,150	74,196	-2,500	6,736	0,001
-15,150	83,960	-2,500	6,500	0,001
-16,150	93,736	-2,500	6,276	0,001
-17,000	102,055	-2,500	6,095	0,001
-18,000	111,851	-2,500	5,891	0,000
-19,000	121,657	-2,500	5,697	0,000
-20,000	131,472	-2,500	5,512	0,000

3.5 Results for Vertical 5 (X = 8,00 m; Z = 0,00 m)

Depth [m]	Effective Stress [kPa]	Hydraulic head [m]	Loading [kPa]	Settlement [m]
-1,300	3,601	-1,300	3,600	0,172
-1,400	4,899	-1,400	3,599	0,170
-1,500	6,187	-1,500	3,587	0,169
-1,600	7,448	-1,600	3,548	0,168
-1,700	8,680	-1,700	3,480	0,167
-1,800	8,891	-1,700	3,391	0,166
-1,900	9,092	-1,700	3,292	0,166
-2,000	9,293	-1,700	3,193	0,165
-2,100	14,644	-1,700	8,244	0,164
-2,100	14,644	-1,700	8,244	0,164
-2,175	14,614	-1,700	8,177	0,164
-2,200	14,604	-1,700	8,154	0,164
-2,250	16,007	-1,700	9,532	0,163
-2,250	16,007	-1,700	9,532	0,163
-2,300	15,978	-1,700	9,480	0,157
-2,500	15,769	-1,699	9,177	0,136
-3,175	14,689	-1,698	7,775	0,107
-4,100	14,124	-1,696	6,765	0,068
-4,100	14,124	-1,696	6,765	0,068
-4,800	16,667	-1,764	6,389	0,048
-5,500	19,351	-1,832	6,153	0,036
-5,500	19,351	-1,832	6,153	0,036
-6,100	23,031	-1,890	6,010	0,029
-6,600	26,125	-1,939	5,916	0,025
-7,100	29,235	-1,988	5,839	0,022
-7,700	32,982	-2,046	5,760	0,018
-7,700	32,982	-2,046	5,760	0,018
-7,850	33,591	-2,061	5,742	0,016

Depth [m]	Effective Stress [kPa]	Hydraulic head [m]	Loading [kPa]	Settlement [m]
-8,000	34,201	-2,076	5,725	0,015
-8,000	34,201	-2,076	5,725	0,015
-9,000	40,480	-2,174	5,622	0,009
-10,000	46,776	-2,273	5,531	0,005
-10,000	46,776	-2,273	5,531	0,005
-10,750	49,850	-2,346	5,467	0,001
-11,500	52,927	-2,420	5,404	0,001
-11,500	52,927	-2,420	5,404	0,001
-11,900	53,612	-2,460	5,370	0,001
-12,300	54,297	-2,500	5,337	0,002
-12,300	54,297	-2,500	5,337	0,002
-13,150	62,724	-2,500	5,264	0,001
-14,150	72,637	-2,500	5,177	0,001
-15,150	82,547	-2,500	5,087	0,001
-16,150	92,455	-2,500	4,995	0,001
-17,000	100,875	-2,500	4,915	0,000
-18,000	110,780	-2,500	4,820	0,000
-19,000	120,683	-2,500	4,723	0,000
-20,000	130,586	-2,500	4,626	0,000

4 Settlements

4.1 Settlements

Vertical number	X co-ordinate [m]	Z co-ordinate [m]	Surface level [m]	Settlement [m]
1	-8,00	0,00	-1,30	0,172
2	-5,00	0,00	-1,30	0,261
3	0,00	0,00	-1,30	0,287
4	5,00	0,00	-1,30	0,261
5	8,00	0,00	-1,30	0,172

4.2 Residual Times

Vertical number	Time [days]	Settlement [m]	Part of final settlement [%]	Residual settlements [m]
1	365	0,138	80,238	0,034
2	365	0,192	73,537	0,069
3	365	0,203	70,820	0,084
4	365	0,192	73,537	0,069
5	365	0,138	80,238	0,034

5 Warnings and errors

List of non-fatal warnings and errors generated during calculation.

1 Model Koppejan is not ideal for unloading (e.g. load removal, temporary dewatering, gradual submerging). If As is much larger than Cs', unloading will yield almost no effect on creep. Switch to the NEN-Bjerrum or abc Isotache model for improved predictions.

2 Non-uniform load [1]: Co-ordinate is below surface (2)

3 Non-uniform load [1]: Co-ordinate is below surface (3)

4 Non-uniform load [2]: Co-ordinate is below surface (1)

5 Non-uniform load [2]: Co-ordinate is below surface (2)

6 Non-uniform load [2]: Co-ordinate is below surface (3)

7 Non-uniform load [2]: Co-ordinate is below surface (4)

End of Report

Report for D-Settlement 9.3

Settlement Calculations
Developed by Deltares

Company:	BAM Infratechniek
Date of report:	3-10-2013
Time of report:	2:49:45
Date of calculation:	3-10-2013
Time of calculation:	2:49:33
Filename:	C:\..\OSP's\R3N_Perceel 2_OSP-123 (DKM1216)-0,1 m overhoogte
Project identification:	Randstad 380 Noordring

1 Table of Contents

1 Table of Contents 2
2 Echo of the Input 3
2.1 Layer Boundaries 3
2.2 PL Lines 3
2.3 General Data 3
2.4 Soil Profiles 4
2.5 Soil Properties 4
2.6 Non-Uniform Loads 5
2.7 Verticals 5
3 Results per Vertical 6
3.1 Results for Vertical 1 (X = -8,00 m; Z = 0,00 m) 6
3.2 Results for Vertical 2 (X = -5,00 m; Z = 0,00 m) 6
3.3 Results for Vertical 3 (X = 0,00 m; Z = 0,00 m) 7
3.4 Results for Vertical 4 (X = 5,00 m; Z = 0,00 m) 8
3.5 Results for Vertical 5 (X = 8,00 m; Z = 0,00 m) 9
4 Settlements 10
4.1 Settlements 10
4.2 Residual Times 10
5 Warnings and errors 11

2 Echo of the Input

2.1 Layer Boundaries

Boundary number	Co-ordinates [m]				
10 - X -	-30,000	-8,500	8,500	30,000	
10 - Y -	-4,600	-4,600	-4,600	-4,600	
9 - X -	-30,000	-8,500	-8,500	8,500	30,000
9 - Y -	-5,300	-5,300	-4,600	-4,600	-4,600
8 - X -	-30,000	-8,500	8,500	8,500	30,000
8 - Y -	-5,300	-5,300	-5,300	-4,600	-4,600
7 - X -	-30,000	-8,500	-8,500	8,500	8,500
7 - Y -	-5,300	-5,300	-5,750	-5,750	-5,300
7 - X -	8,500	30,000			
7 - Y -	-4,600	-4,600			
6 - X -	-30,000	-8,500	-8,500	8,500	8,500
6 - Y -	-5,300	-5,300	-5,750	-5,750	-5,300
6 - X -	30,000				
6 - Y -	-5,300				
5 - X -	-30,000	30,000			
5 - Y -	-6,300	-6,300			
4 - X -	-30,000	30,000			
4 - Y -	-8,800	-8,800			
3 - X -	-30,000	30,000			
3 - Y -	-10,000	-10,000			
2 - X -	-30,000	30,000			
2 - Y -	-11,700	-11,700			
1 - X -	-30,000	30,000			
1 - Y -	-12,300	-12,300			
0 - X -	-30,000	30,000			
0 - Y -	-20,000	-20,000			

2.2 PL Lines

PL line number	Co-ordinates [m]				
1 - X -	-30,000	30,000			
1 - Y -	-5,100	-5,100			
2 - X -	-30,000	30,000			
2 - Y -	-4,200	-4,200			

2.3 General Data

Soil model:	Koppejan
Consolidation model:	Darcy
Strain model:	Linear
Groundwater level:	Initial determined by PL-line number 1
Unit weight of water:	10,00 [kN/m³]
Stress distribution	
- Soil:	Buisman
- Loads:	Simulate
End of consolidation:	10950,00 [days]
No maintain profile	
Pc (initial):	Variable parallel to the initial effective stress
Pc (per step):	Automatic increased to the final effective stresses
Creep rate reference time:	1,000 [days]
No imaginary surface	
With submerging	
(only for non uniform loads)	
- Iteration stop criterium :	0,10 [m]
Load column width	
- Non-Uniform Loads :	1,00 [m]
- Trapezoidal Loads :	1,00 [m]

2.4 Soil Profiles

Layer number	Material name	PL-line top	PL-line bottom
10	veen toplaag	1	1
9	verbetering veen top...	1	1
8	verbetering klei zandig	1	1
7	veen toplaag	1	1
6	klei zandig-A4 (N)	1	1
5	klei humeus-A4 (N)	1	1
4	veen-A4 (Z)	99	99
3	klei siltig-A4 (N)	99	99
2	basisveen-A4 (N)	99	99
1	pleistoceen-A4 (N)	2	2

2.5 Soil Properties

Layer number	Drained	Unit weight	
		Unsaturated [kN/m³]	Saturated [kN/m³]
10	No	13,00	13,00
9	Yes	13,00	13,00
8	Yes	17,40	17,40
7	No	13,00	13,00
6	No	17,40	17,40
5	No	13,20	13,20
4	No	10,50	10,50
3	No	15,40	15,40
2	No	10,80	10,80
1	Yes	18,00	20,00

Layer number	Storage type	Vert. consolid. coefficient Cv [m²/s]	Vertical permeability [m/s]	Permeability strain mod. [m/s]	Initial vertical permeability [m/s]
10	Vert. cons.	7,70E-08	-	-	-
9	Vert. cons.	-	-	-	-
8	Vert. cons.	-	-	-	-
7	Vert. cons.	7,70E-08	-	-	-
6	Vert. cons.	2,00E-07	-	-	-
5	Vert. cons.	7,70E-08	-	-	-
4	Vert. cons.	3,00E-08	-	-	-
3	Vert. cons.	9,40E-08	-	-	-
2	Vert. cons.	4,70E-08	-	-	-
1	Vert. cons.	-	-	-	-

Layer number	Precons. pressure [kN/m²]	POP [kN/m²]	OCR [-]
10	-	10,00	-
9	-	-	1,00
8	-	-	1,00
7	-	10,00	-
6	-	10,00	-
5	-	10,00	-
4	-	10,00	-
3	-	10,00	-
2	-	10,00	-
1	-	-	1,00

Layer number	Primary compr. coeff.		Secular compr. coef.		Swell constants	
	Cp [-]	Cp' [-]	Cs [-]	Cs' [-]	Ap [-]	As [-]
10	3,10E+01	6,50E+00	1,45E+02	1,60E+01	3,10E+01	1,60E+01
9	8,00E+02	2,00E+02	1,00E+05	1,00E+05	1,00E+09	1,00E+09
8	8,00E+02	2,00E+02	1,00E+05	1,00E+05	1,00E+09	1,00E+09
7	3,10E+01	6,50E+00	1,45E+02	1,60E+01	3,10E+01	1,60E+01
6	7,06E+01	2,87E+01	3,21E+02	1,95E+02	7,06E+01	1,95E+02

Layer number	Primary compr. coeff.		Secular compr. coef.		Swell constants	
	Cp [-]	Cp' [-]	Cs [-]	Cs' [-]	Ap [-]	As [-]
5	3,10E+01	6,50E+00	1,45E+02	1,60E+01	3,10E+01	1,60E+01
4	3,32E+01	5,70E+00	1,14E+02	2,28E+01	3,32E+01	2,28E+01
3	5,67E+01	1,38E+01	2,57E+02	8,98E+01	5,67E+01	8,98E+01
2	5,14E+01	7,20E+00	1,11E+02	2,76E+01	5,14E+01	2,76E+01
1	1,80E+03	6,00E+02	1,00E+09	1,00E+09	1,00E+09	1,00E+09

2.6 Non-Uniform Loads

Load number	Time [days]	Unit weight	
		Unsaturated [kN/m³]	Saturated [kN/m³]
1	0	5,00	17,00
2	0	1,00	13,00
3	0	0,00	10,00
4	0	18,00	20,00

Load number	Co-ordinates [m]					
1 - X -	-8,50	-8,50	8,50	8,50		
1 - Y -	-4,60	-5,30	-5,30	-4,60		
2 - X -	-8,50	-8,50	8,50	8,50		
2 - Y -	-5,30	-5,75	-5,75	-5,30		
3 - X -	-8,50	8,50				
3 - Y -	-4,60	-4,60				
4 - X -	-8,50	-8,50	8,50	8,50		
4 - Y -	-4,60	-4,50	-4,50	-4,60		

2.7 Verticals

Vertical number	X co-ordinates [m]				
1 - 5	-8,000	-5,000	0,000	5,000	8,000

Discretisation = 100

3 Results per Vertical

3.1 Results for Vertical 1 (X = -8,00 m; Z = 0,00 m)

Depth [m]	Effective Stress [kPa]	Hydraulic head [m]	Loading [kPa]	Settlement [m]
-4,600	1,801	-4,600	1,800	0,073
-4,700	3,099	-4,700	1,799	0,072
-4,800	4,393	-4,800	1,793	0,072
-4,900	5,674	-4,900	1,774	0,072
-4,950	6,309	-4,950	1,759	0,072
-5,000	6,940	-5,000	1,740	0,071
-5,100	8,195	-5,100	1,695	0,071
-5,200	8,446	-5,100	1,646	0,071
-5,300	12,745	-5,100	5,645	0,071
-5,300	12,745	-5,100	5,645	0,071
-5,400	13,436	-5,100	5,596	0,071
-5,500	14,118	-5,100	5,538	0,070
-5,525	14,285	-5,100	5,520	0,070
-5,600	14,774	-5,100	5,454	0,070
-5,750	17,056	-5,100	6,626	0,070
-5,750	17,056	-5,100	6,626	0,070
-6,025	18,695	-5,100	6,230	0,067
-6,300	20,318	-5,100	5,818	0,064
-6,300	20,318	-5,100	5,818	0,064
-6,950	21,687	-5,100	5,107	0,052
-7,550	23,242	-5,100	4,743	0,044
-8,200	25,082	-5,100	4,503	0,036
-8,800	26,855	-5,100	4,356	0,029
-8,800	26,855	-5,100	4,356	0,029
-9,400	25,505	-4,946	4,249	0,023
-10,000	24,181	-4,791	4,167	0,015
-10,000	24,181	-4,791	4,167	0,015
-10,850	26,496	-4,573	4,078	0,010
-11,700	28,829	-4,354	4,006	0,006
-11,700	28,829	-4,354	4,006	0,006
-12,000	28,275	-4,277	3,984	0,003
-12,300	27,723	-4,200	3,963	0,001
-12,300	27,723	-4,200	3,963	0,001
-13,150	36,167	-4,200	3,907	0,001
-14,150	46,105	-4,200	3,845	0,001
-15,150	56,045	-4,200	3,785	0,000
-16,150	65,984	-4,200	3,724	0,000
-17,000	74,432	-4,200	3,672	0,000
-18,000	84,370	-4,200	3,610	0,000
-19,000	94,305	-4,200	3,545	0,000
-20,000	104,240	-4,200	3,480	0,000

3.2 Results for Vertical 2 (X = -5,00 m; Z = 0,00 m)

Depth [m]	Effective Stress [kPa]	Hydraulic head [m]	Loading [kPa]	Settlement [m]
-4,600	1,801	-4,600	1,800	0,102
-4,700	3,100	-4,700	1,800	0,101
-4,800	4,400	-4,800	1,800	0,101
-4,900	5,700	-4,900	1,800	0,101
-4,950	6,350	-4,950	1,800	0,101
-5,000	7,000	-5,000	1,800	0,101
-5,100	8,300	-5,100	1,800	0,101

Depth [m]	Effective Stress [kPa]	Hydraulic head [m]	Loading [kPa]	Settlement [m]
-5,200	8,600	-5,100	1,800	0,100
-5,300	12,997	-5,100	5,897	0,100
-5,300	12,997	-5,100	5,897	0,100
-5,400	13,737	-5,100	5,897	0,100
-5,500	14,476	-5,100	5,896	0,100
-5,525	14,661	-5,100	5,896	0,100
-5,600	15,216	-5,100	5,896	0,099
-5,750	17,674	-5,100	7,244	0,099
-5,750	17,674	-5,100	7,244	0,099
-6,025	19,703	-5,100	7,239	0,095
-6,300	21,728	-5,100	7,229	0,092
-6,300	21,728	-5,100	7,229	0,092
-6,950	23,757	-5,100	7,178	0,077
-7,550	25,587	-5,100	7,088	0,065
-8,200	27,525	-5,100	6,947	0,053
-8,800	29,286	-5,100	6,788	0,043
-8,800	29,286	-5,100	6,788	0,043
-9,400	27,870	-4,946	6,614	0,033
-10,000	26,449	-4,791	6,436	0,022
-10,000	26,449	-4,791	6,436	0,022
-10,850	28,607	-4,573	6,189	0,015
-11,700	30,779	-4,354	5,956	0,008
-11,700	30,779	-4,354	5,956	0,008
-12,000	30,169	-4,277	5,878	0,005
-12,300	29,562	-4,200	5,802	0,001
-12,300	29,562	-4,200	5,802	0,001
-13,150	37,856	-4,200	5,596	0,001
-14,150	47,634	-4,200	5,374	0,001
-15,150	57,428	-4,200	5,168	0,001
-16,150	67,236	-4,200	4,976	0,000
-17,000	75,583	-4,200	4,823	0,000
-18,000	85,412	-4,200	4,652	0,000
-19,000	95,251	-4,200	4,491	0,000
-20,000	105,097	-4,200	4,337	0,000

3.3 Results for Vertical 3 (X = 0,00 m; Z = 0,00 m)

Depth [m]	Effective Stress [kPa]	Hydraulic head [m]	Loading [kPa]	Settlement [m]
-4,600	1,801	-4,600	1,800	0,107
-4,700	3,100	-4,700	1,800	0,107
-4,800	4,400	-4,800	1,800	0,106
-4,900	5,700	-4,900	1,800	0,106
-4,950	6,350	-4,950	1,800	0,106
-5,000	7,000	-5,000	1,800	0,106
-5,100	8,300	-5,100	1,800	0,106
-5,200	8,600	-5,100	1,800	0,106
-5,300	13,011	-5,100	5,911	0,106
-5,300	13,011	-5,100	5,911	0,106
-5,400	13,751	-5,100	5,911	0,105
-5,500	14,491	-5,100	5,911	0,105
-5,525	14,676	-5,100	5,911	0,105
-5,600	15,231	-5,100	5,911	0,105
-5,750	17,691	-5,100	7,261	0,104
-5,750	17,691	-5,100	7,261	0,104
-6,025	19,725	-5,100	7,260	0,101
-6,300	21,759	-5,100	7,260	0,098
-6,300	21,759	-5,100	7,260	0,098
-6,950	23,834	-5,100	7,255	0,083
-7,550	25,743	-5,100	7,244	0,070
-8,200	27,800	-5,100	7,222	0,058

Depth [m]	Effective Stress [kPa]	Hydraulic head [m]	Loading [kPa]	Settlement [m]
-8,800	29,687	-5,100	7,189	0,048
-8,800	29,687	-5,100	7,189	0,048
-9,400	28,397	-4,946	7,142	0,036
-10,000	27,093	-4,791	7,080	0,025
-10,000	27,093	-4,791	7,080	0,025
-10,850	29,383	-4,573	6,966	0,017
-11,700	31,646	-4,354	6,824	0,010
-11,700	31,646	-4,354	6,824	0,010
-12,000	31,059	-4,277	6,768	0,005
-12,300	30,470	-4,200	6,710	0,001
-12,300	30,470	-4,200	6,710	0,001
-13,150	38,792	-4,200	6,532	0,001
-14,150	48,567	-4,200	6,307	0,001
-15,150	58,332	-4,200	6,072	0,001
-16,150	68,094	-4,200	5,834	0,000
-17,000	76,393	-4,200	5,633	0,000
-18,000	86,163	-4,200	5,403	0,000
-19,000	95,941	-4,200	5,181	0,000
-20,000	105,728	-4,200	4,968	0,000

3.4 Results for Vertical 4 (X = 5,00 m; Z = 0,00 m)

Depth [m]	Effective Stress [kPa]	Hydraulic head [m]	Loading [kPa]	Settlement [m]
-4,600	1,801	-4,600	1,800	0,102
-4,700	3,100	-4,700	1,800	0,101
-4,800	4,400	-4,800	1,800	0,101
-4,900	5,700	-4,900	1,800	0,101
-4,950	6,350	-4,950	1,800	0,101
-5,000	7,000	-5,000	1,800	0,101
-5,100	8,300	-5,100	1,800	0,101
-5,200	8,600	-5,100	1,800	0,100
-5,300	12,997	-5,100	5,897	0,100
-5,300	12,997	-5,100	5,897	0,100
-5,400	13,737	-5,100	5,897	0,100
-5,500	14,476	-5,100	5,896	0,100
-5,525	14,661	-5,100	5,896	0,100
-5,600	15,216	-5,100	5,896	0,099
-5,750	17,674	-5,100	7,244	0,099
-5,750	17,674	-5,100	7,244	0,099
-6,025	19,703	-5,100	7,239	0,095
-6,300	21,728	-5,100	7,229	0,092
-6,300	21,728	-5,100	7,229	0,092
-6,950	23,757	-5,100	7,178	0,077
-7,550	25,587	-5,100	7,088	0,065
-8,200	27,525	-5,100	6,947	0,053
-8,800	29,286	-5,100	6,788	0,043
-8,800	29,286	-5,100	6,788	0,043
-9,400	27,870	-4,946	6,614	0,033
-10,000	26,449	-4,791	6,436	0,022
-10,000	26,449	-4,791	6,436	0,022
-10,850	28,607	-4,573	6,189	0,015
-11,700	30,779	-4,354	5,956	0,008
-11,700	30,779	-4,354	5,956	0,008
-12,000	30,169	-4,277	5,878	0,005
-12,300	29,562	-4,200	5,802	0,001
-12,300	29,562	-4,200	5,802	0,001
-13,150	37,856	-4,200	5,596	0,001
-14,150	47,634	-4,200	5,374	0,001
-15,150	57,428	-4,200	5,168	0,001
-16,150	67,236	-4,200	4,976	0,000

Depth [m]	Effective Stress [kPa]	Hydraulic head [m]	Loading [kPa]	Settlement [m]
-17,000	75,583	-4,200	4,823	0,000
-18,000	85,412	-4,200	4,652	0,000
-19,000	95,251	-4,200	4,491	0,000
-20,000	105,097	-4,200	4,337	0,000

3.5 Results for Vertical 5 (X = 8,00 m; Z = 0,00 m)

Depth [m]	Effective Stress [kPa]	Hydraulic head [m]	Loading [kPa]	Settlement [m]
-4,600	1,801	-4,600	1,800	0,073
-4,700	3,099	-4,700	1,799	0,072
-4,800	4,393	-4,800	1,793	0,072
-4,900	5,674	-4,900	1,774	0,072
-4,950	6,309	-4,950	1,759	0,072
-5,000	6,940	-5,000	1,740	0,071
-5,100	8,195	-5,100	1,695	0,071
-5,200	8,446	-5,100	1,646	0,071
-5,300	12,745	-5,100	5,645	0,071
-5,300	12,745	-5,100	5,645	0,071
-5,400	13,436	-5,100	5,596	0,071
-5,500	14,118	-5,100	5,538	0,070
-5,525	14,285	-5,100	5,520	0,070
-5,600	14,774	-5,100	5,454	0,070
-5,750	17,056	-5,100	6,626	0,070
-5,750	17,056	-5,100	6,626	0,070
-6,025	18,695	-5,100	6,230	0,067
-6,300	20,318	-5,100	5,818	0,064
-6,300	20,318	-5,100	5,818	0,064
-6,950	21,687	-5,100	5,107	0,052
-7,550	23,242	-5,100	4,743	0,044
-8,200	25,082	-5,100	4,503	0,036
-8,800	26,855	-5,100	4,356	0,029
-8,800	26,855	-5,100	4,356	0,029
-9,400	25,505	-4,946	4,249	0,023
-10,000	24,181	-4,791	4,167	0,015
-10,000	24,181	-4,791	4,167	0,015
-10,850	26,496	-4,573	4,078	0,010
-11,700	28,829	-4,354	4,006	0,006
-11,700	28,829	-4,354	4,006	0,006
-12,000	28,275	-4,277	3,984	0,003
-12,300	27,723	-4,200	3,963	0,001
-12,300	27,723	-4,200	3,963	0,001
-13,150	36,167	-4,200	3,907	0,001
-14,150	46,105	-4,200	3,845	0,001
-15,150	56,045	-4,200	3,785	0,000
-16,150	65,984	-4,200	3,724	0,000
-17,000	74,432	-4,200	3,672	0,000
-18,000	84,370	-4,200	3,610	0,000
-19,000	94,305	-4,200	3,545	0,000
-20,000	104,240	-4,200	3,480	0,000

4 Settlements

4.1 Settlements

Vertical number	X co-ordinate [m]	Z co-ordinate [m]	Surface level [m]	Settlement [m]
1	-8,00	0,00	-4,60	0,073
2	-5,00	0,00	-4,60	0,102
3	0,00	0,00	-4,60	0,107
4	5,00	0,00	-4,60	0,102
5	8,00	0,00	-4,60	0,073

4.2 Residual Times

Vertical number	Time [days]	Settlement [m]	Part of final settlement [%]	Residual settlements [m]
1	365	0,032	43,938	0,041
2	365	0,044	42,856	0,058
3	365	0,046	42,885	0,061
4	365	0,044	42,856	0,058
5	365	0,032	43,938	0,041

5 Warnings and errors

List of non-fatal warnings and errors generated during calculation.

1 Model Koppejan is not ideal for unloading (e.g. load removal, temporary dewatering, gradual submerging). If As is much larger than Cs', unloading will yield almost no effect on creep. Switch to the NEN-Bjerrum or abc Isotache model for improved predictions.

2 Non-uniform load [1]: Co-ordinate is below surface (2)

3 Non-uniform load [1]: Co-ordinate is below surface (3)

4 Non-uniform load [2]: Co-ordinate is below surface (1)

5 Non-uniform load [2]: Co-ordinate is below surface (2)

6 Non-uniform load [2]: Co-ordinate is below surface (3)

7 Non-uniform load [2]: Co-ordinate is below surface (4)

End of Report

Report for D-Settlement 9.3

Settlement Calculations
Developed by Deltares

Company:	BAM Infratechniek
Date of report:	3-10-2013
Time of report:	2:48:45
Date of calculation:	3-10-2013
Time of calculation:	2:47:54
Filename:	C:\..\OSP's\R3N_Perceel 2_OSP-109 (DKM543)-0,1 m overhoogte
Project identification:	Randstad 380 Noordring

1 Table of Contents

1 Table of Contents 2
2 Echo of the Input 3
2.1 Layer Boundaries 3
2.2 PL Lines 3
2.3 General Data 3
2.4 Soil Profiles 4
2.5 Soil Properties 4
2.6 Non-Uniform Loads 5
2.7 Verticals 5
3 Results per Vertical 6
3.1 Results for Vertical 1 (X = -8,00 m; Z = 0,00 m) 6
3.2 Results for Vertical 2 (X = -5,00 m; Z = 0,00 m) 6
3.3 Results for Vertical 3 (X = 0,00 m; Z = 0,00 m) 7
3.4 Results for Vertical 4 (X = 5,00 m; Z = 0,00 m) 8
3.5 Results for Vertical 5 (X = 8,00 m; Z = 0,00 m) 9
4 Settlements 11
4.1 Settlements 11
4.2 Residual Times 11
5 Warnings and errors 12

2 Echo of the Input

2.1 Layer Boundaries

Boundary number	Co-ordinates [m]				
10 - X -	-30,000	-8,500	8,500	30,000	
10 - Y -	-4,300	-4,300	-4,300	-4,300	
9 - X -	-30,000	-8,500	-8,500	8,500	30,000
9 - Y -	-4,800	-4,800	-4,300	-4,300	-4,300
8 - X -	-30,000	-8,500	8,500	8,500	30,000
8 - Y -	-4,800	-4,800	-4,800	-4,300	-4,300
7 - X -	-30,000	-8,500	-8,500	8,500	8,500
7 - Y -	-4,800	-4,800	-5,450	-5,450	-4,800
7 - X -	8,500	30,000			
7 - Y -	-4,300	-4,300			
6 - X -	-30,000	-8,500	-8,500	8,500	8,500
6 - Y -	-4,800	-4,800	-5,450	-5,450	-4,800
6 - X -	30,000				
6 - Y -	-4,800				
5 - X -	-30,000	30,000			
5 - Y -	-5,500	-5,500			
4 - X -	-30,000	30,000			
4 - Y -	-6,000	-6,000			
3 - X -	-30,000	30,000			
3 - Y -	-6,500	-6,500			
2 - X -	-30,000	30,000			
2 - Y -	-8,700	-8,700			
1 - X -	-30,000	30,000			
1 - Y -	-9,500	-9,500			
0 - X -	-30,000	30,000			
0 - Y -	-20,000	-20,000			

2.2 PL Lines

PL line number	Co-ordinates [m]				
1 - X -	-30,000	30,000			
1 - Y -	-4,600	-4,600			
2 - X -	-30,000	30,000			
2 - Y -	-5,000	-5,000			

2.3 General Data

Soil model:	Koppejan
Consolidation model:	Darcy
Strain model:	Linear
Groundwater level:	Initial determined by PL-line number 1
Unit weight of water:	10,00 [kN/m³]
Stress distribution	
- Soil:	Buisman
- Loads:	Simulate
End of consolidation:	10950,00 [days]
No maintain profile	
Pc (initial):	Variable parallel to the initial effective stress
Pc (per step):	Automatic increased to the final effective stresses
Creep rate reference time:	1,000 [days]
No imaginary surface	
With submerging	
(only for non uniform loads)	
- Iteration stop criterium :	0,10 [m]
Load column width	
- Non-Uniform Loads :	1,00 [m]
- Trapezoidal Loads :	1,00 [m]

2.4 Soil Profiles

Layer number	Material name	PL-line top	PL-line bottom
10	veen toplaag	1	1
9	verbetering veen top...	1	1
8	verbetering klei, zan...	1	1
7	veen toplaag	1	1
6	klei zandig-A4 (N)	1	1
5	klei humeus-A4 (N)	1	1
4	zand kleiig-A4 (N)	1	1
3	klei humeus-A4 (N)	99	99
2	basisveen-A4 (N)	99	99
1	pleistoceen-A4 (N)	2	2

2.5 Soil Properties

Layer number	Drained	Unit weight	
		Unsaturated [kN/m³]	Saturated [kN/m³]
10	No	13,00	13,00
9	Yes	13,00	13,00
8	Yes	17,40	17,40
7	No	13,00	13,00
6	No	17,40	17,40
5	No	13,20	13,20
4	No	17,50	19,00
3	No	13,20	13,20
2	No	10,80	10,80
1	Yes	18,00	20,00

Layer number	Storage type	Vert. consolid. coefficient Cv [m²/s]	Vertical permeability [m/s]	Permeability strain mod. [m/s]	Initial vertical permeability [m/s]
10	Vert. cons.	7,70E-08	-	-	-
9	Vert. cons.	-	-	-	-
8	Vert. cons.	-	-	-	-
7	Vert. cons.	7,70E-08	-	-	-
6	Vert. cons.	2,00E-07	-	-	-
5	Vert. cons.	7,70E-08	-	-	-
4	Vert. cons.	5,50E-06	-	-	-
3	Vert. cons.	7,70E-08	-	-	-
2	Vert. cons.	4,70E-08	-	-	-
1	Vert. cons.	-	-	-	-

Layer number	Precons. pressure [kN/m²]	POP [kN/m²]	OCR [-]
10	-	10,00	-
9	-	-	1,00
8	-	-	1,00
7	-	10,00	-
6	-	10,00	-
5	-	10,00	-
4	-	-	1,00
3	-	10,00	-
2	-	10,00	-
1	-	-	1,00

Layer number	Primary compr. coeff.		Secular compr. coef.		Swell constants	
	Cp [-]	Cp' [-]	Cs [-]	Cs' [-]	Ap [-]	As [-]
10	3,10E+01	6,50E+00	1,45E+02	1,60E+01	3,10E+01	1,60E+01
9	8,00E+02	2,00E+02	1,00E+05	1,00E+05	1,00E+09	1,00E+09
8	8,00E+02	2,00E+02	1,00E+05	1,00E+05	1,00E+09	1,00E+09
7	3,10E+01	6,50E+00	1,45E+02	1,60E+01	3,10E+01	1,60E+01
6	7,06E+01	2,87E+01	3,21E+02	1,95E+02	7,06E+01	1,95E+02

Layer number	Primary compr. coeff.		Secular compr. coef.		Swell constants	
	Cp [-]	Cp' [-]	Cs [-]	Cs' [-]	Ap [-]	As [-]
5	3,10E+01	6,50E+00	1,45E+02	1,60E+01	3,10E+01	1,60E+01
4	4,00E+02	2,00E+02	1,00E+09	1,00E+09	4,00E+02	1,00E+09
3	3,10E+01	6,50E+00	1,45E+02	1,60E+01	3,10E+01	1,60E+01
2	5,14E+01	7,20E+00	1,11E+02	2,76E+01	5,14E+01	2,76E+01
1	1,80E+03	6,00E+02	1,00E+09	1,00E+09	1,00E+09	1,00E+09

2.6 Non-Uniform Loads

Load number	Time	Unit weight	
	[days]	Unsaturated [kN/m³]	Saturated [kN/m³]
1	0	5,00	17,00
2	0	1,00	13,00
3	0	0,00	10,00
4	0	18,00	20,00

Load number	Co-ordinates [m]					
1 - X -	-8,50	-8,50	8,50	8,50		
1 - Y -	-4,30	-4,80	-4,80	-4,30		
2 - X -	-8,50	-8,50	8,50	8,50		
2 - Y -	-4,80	-5,45	-5,45	-4,80		
3 - X -	-8,50	8,50				
3 - Y -	-4,30	-4,30				
4 - X -	-8,50	-8,50	8,50	8,50		
4 - Y -	-4,30	-4,20	-4,20	-4,30		

2.7 Verticals

Vertical number	X co-ordinates [m]				
1 - 5	-8,000	-5,000	0,000	5,000	8,000

Discretisation = 100

3 Results per Vertical

3.1 Results for Vertical 1 (X = -8,00 m; Z = 0,00 m)

Depth [m]	Effective Stress [kPa]	Hydraulic head [m]	Loading [kPa]	Settlement [m]
-4,300	1,801	-4,300	1,800	0,050
-4,400	3,099	-4,400	1,799	0,049
-4,500	4,393	-4,500	1,793	0,049
-4,550	5,035	-4,550	1,785	0,049
-4,600	5,674	-4,600	1,774	0,049
-4,700	5,940	-4,600	1,740	0,048
-4,800	9,197	-4,600	4,697	0,048
-4,800	9,197	-4,600	4,697	0,048
-4,900	9,887	-4,600	4,647	0,048
-5,000	10,567	-4,600	4,587	0,047
-5,100	11,227	-4,600	4,507	0,047
-5,125	11,388	-4,600	4,483	0,047
-5,200	11,866	-4,600	4,406	0,047
-5,300	12,491	-4,600	4,291	0,047
-5,450	15,374	-4,600	6,064	0,046
-5,450	15,374	-4,600	6,064	0,046
-5,475	15,530	-4,600	6,035	0,046
-5,500	15,686	-4,600	6,006	0,046
-5,500	15,686	-4,600	6,006	0,046
-5,750	16,201	-4,600	5,721	0,039
-6,000	16,687	-4,600	5,407	0,033
-6,000	16,687	-4,600	5,407	0,033
-6,250	18,647	-4,600	5,117	0,032
-6,500	20,662	-4,600	4,882	0,032
-6,500	20,662	-4,600	4,882	0,032
-7,100	22,998	-4,680	4,498	0,024
-7,600	25,065	-4,747	4,299	0,018
-8,100	27,192	-4,813	4,159	0,013
-8,700	29,790	-4,893	4,037	0,007
-8,700	29,790	-4,893	4,037	0,007
-9,100	30,581	-4,947	3,974	0,004
-9,500	31,382	-5,000	3,922	0,001
-9,500	31,382	-5,000	3,922	0,001
-10,250	38,802	-5,000	3,842	0,001
-11,250	48,719	-5,000	3,759	0,001
-12,250	58,651	-5,000	3,691	0,001
-13,250	68,591	-5,000	3,631	0,000
-14,250	78,533	-5,000	3,573	0,000
-14,750	83,505	-5,000	3,545	0,000
-15,500	90,963	-5,000	3,503	0,000
-16,500	100,906	-5,000	3,446	0,000
-17,500	110,847	-5,000	3,387	0,000
-18,500	120,787	-5,000	3,327	0,000
-19,500	130,726	-5,000	3,266	0,000
-20,000	135,694	-5,000	3,234	0,000

3.2 Results for Vertical 2 (X = -5,00 m; Z = 0,00 m)

Depth [m]	Effective Stress [kPa]	Hydraulic head [m]	Loading [kPa]	Settlement [m]
-4,300	1,801	-4,300	1,800	0,068
-4,400	3,100	-4,400	1,800	0,067
-4,500	4,400	-4,500	1,800	0,067

Depth [m]	Effective Stress [kPa]	Hydraulic head [m]	Loading [kPa]	Settlement [m]
-4,550	5,050	-4,550	1,800	0,066
-4,600	5,700	-4,600	1,800	0,066
-4,700	6,000	-4,600	1,800	0,066
-4,800	9,331	-4,600	4,831	0,066
-4,800	9,331	-4,600	4,831	0,066
-4,900	10,071	-4,600	4,831	0,066
-5,000	10,811	-4,600	4,831	0,065
-5,100	11,550	-4,600	4,830	0,065
-5,125	11,735	-4,600	4,830	0,065
-5,200	12,290	-4,600	4,830	0,065
-5,300	13,029	-4,600	4,829	0,064
-5,450	16,087	-4,600	6,777	0,064
-5,450	16,087	-4,600	6,777	0,064
-5,475	16,272	-4,600	6,777	0,064
-5,500	16,456	-4,600	6,776	0,063
-5,500	16,456	-4,600	6,776	0,063
-5,750	17,250	-4,600	6,770	0,056
-6,000	18,040	-4,600	6,760	0,048
-6,000	18,040	-4,600	6,760	0,048
-6,250	20,275	-4,600	6,745	0,048
-6,500	22,504	-4,600	6,724	0,047
-6,500	22,504	-4,600	6,724	0,047
-7,100	25,146	-4,680	6,646	0,035
-7,600	27,320	-4,747	6,553	0,027
-8,100	29,472	-4,813	6,439	0,019
-8,700	32,037	-4,893	6,284	0,011
-8,700	32,037	-4,893	6,284	0,011
-9,100	32,781	-4,947	6,174	0,006
-9,500	33,524	-5,000	6,064	0,001
-9,500	33,524	-5,000	6,064	0,001
-10,250	40,818	-5,000	5,858	0,001
-11,250	50,558	-5,000	5,598	0,001
-12,250	60,319	-5,000	5,359	0,001
-13,250	70,100	-5,000	5,140	0,001
-14,250	79,899	-5,000	4,939	0,000
-14,750	84,804	-5,000	4,844	0,000
-15,500	92,168	-5,000	4,708	0,000
-16,500	101,997	-5,000	4,537	0,000
-17,500	111,836	-5,000	4,376	0,000
-18,500	121,683	-5,000	4,223	0,000
-19,500	131,539	-5,000	4,079	0,000
-20,000	136,469	-5,000	4,009	0,000

3.3 Results for Vertical 3 (X = 0,00 m; Z = 0,00 m)

Depth [m]	Effective Stress [kPa]	Hydraulic head [m]	Loading [kPa]	Settlement [m]
-4,300	1,801	-4,300	1,800	0,069
-4,400	3,100	-4,400	1,800	0,069
-4,500	4,400	-4,500	1,800	0,068
-4,550	5,050	-4,550	1,800	0,068
-4,600	5,700	-4,600	1,800	0,068
-4,700	6,000	-4,600	1,800	0,068
-4,800	9,337	-4,600	4,837	0,068
-4,800	9,337	-4,600	4,837	0,068
-4,900	10,077	-4,600	4,837	0,067
-5,000	10,817	-4,600	4,837	0,067
-5,100	11,557	-4,600	4,837	0,067
-5,125	11,742	-4,600	4,837	0,067
-5,200	12,297	-4,600	4,837	0,067
-5,300	13,037	-4,600	4,837	0,066

Depth [m]	Effective Stress [kPa]	Hydraulic head [m]	Loading [kPa]	Settlement [m]
-5,450	16,097	-4,600	6,787	0,066
-5,450	16,097	-4,600	6,787	0,066
-5,475	16,282	-4,600	6,787	0,066
-5,500	16,467	-4,600	6,787	0,065
-5,500	16,467	-4,600	6,787	0,065
-5,750	17,267	-4,600	6,787	0,057
-6,000	18,066	-4,600	6,786	0,050
-6,000	18,066	-4,600	6,786	0,050
-6,250	20,314	-4,600	6,784	0,050
-6,500	22,562	-4,600	6,782	0,049
-6,500	22,562	-4,600	6,782	0,049
-7,100	25,274	-4,680	6,774	0,037
-7,600	27,527	-4,747	6,760	0,028
-8,100	29,773	-4,813	6,740	0,020
-8,700	32,457	-4,893	6,704	0,011
-8,700	32,457	-4,893	6,704	0,011
-9,100	33,279	-4,947	6,673	0,006
-9,500	34,095	-5,000	6,635	0,001
-9,500	34,095	-5,000	6,635	0,001
-10,250	41,507	-5,000	6,547	0,001
-11,250	51,357	-5,000	6,397	0,001
-12,250	61,177	-5,000	6,217	0,001
-13,250	70,975	-5,000	6,015	0,001
-14,250	80,760	-5,000	5,800	0,000
-14,750	85,649	-5,000	5,689	0,000
-15,500	92,983	-5,000	5,523	0,000
-16,500	102,762	-5,000	5,302	0,000
-17,500	112,545	-5,000	5,085	0,000
-18,500	122,337	-5,000	4,877	0,000
-19,500	132,137	-5,000	4,677	0,000
-20,000	137,040	-5,000	4,580	0,000

3.4 Results for Vertical 4 (X = 5,00 m; Z = 0,00 m)

Depth [m]	Effective Stress [kPa]	Hydraulic head [m]	Loading [kPa]	Settlement [m]
-4,300	1,801	-4,300	1,800	0,068
-4,400	3,100	-4,400	1,800	0,067
-4,500	4,400	-4,500	1,800	0,067
-4,550	5,050	-4,550	1,800	0,066
-4,600	5,700	-4,600	1,800	0,066
-4,700	6,000	-4,600	1,800	0,066
-4,800	9,331	-4,600	4,831	0,066
-4,800	9,331	-4,600	4,831	0,066
-4,900	10,071	-4,600	4,831	0,066
-5,000	10,811	-4,600	4,831	0,065
-5,100	11,550	-4,600	4,830	0,065
-5,125	11,735	-4,600	4,830	0,065
-5,200	12,290	-4,600	4,830	0,065
-5,300	13,029	-4,600	4,829	0,064
-5,450	16,087	-4,600	6,777	0,064
-5,450	16,087	-4,600	6,777	0,064
-5,475	16,272	-4,600	6,777	0,064
-5,500	16,456	-4,600	6,776	0,063
-5,500	16,456	-4,600	6,776	0,063
-5,750	17,250	-4,600	6,770	0,056
-6,000	18,040	-4,600	6,760	0,048
-6,000	18,040	-4,600	6,760	0,048
-6,250	20,275	-4,600	6,745	0,048
-6,500	22,504	-4,600	6,724	0,047
-6,500	22,504	-4,600	6,724	0,047

Depth [m]	Effective Stress [kPa]	Hydraulic head [m]	Loading [kPa]	Settlement [m]
-7,100	25,146	-4,680	6,646	0,035
-7,600	27,320	-4,747	6,553	0,027
-8,100	29,472	-4,813	6,439	0,019
-8,700	32,037	-4,893	6,284	0,011
-8,700	32,037	-4,893	6,284	0,011
-9,100	32,781	-4,947	6,174	0,006
-9,500	33,524	-5,000	6,064	0,001
-9,500	33,524	-5,000	6,064	0,001
-10,250	40,818	-5,000	5,858	0,001
-11,250	50,558	-5,000	5,598	0,001
-12,250	60,319	-5,000	5,359	0,001
-13,250	70,100	-5,000	5,140	0,001
-14,250	79,899	-5,000	4,939	0,000
-14,750	84,804	-5,000	4,844	0,000
-15,500	92,168	-5,000	4,708	0,000
-16,500	101,997	-5,000	4,537	0,000
-17,500	111,836	-5,000	4,376	0,000
-18,500	121,683	-5,000	4,223	0,000
-19,500	131,539	-5,000	4,079	0,000
-20,000	136,469	-5,000	4,009	0,000

3.5 Results for Vertical 5 (X = 8,00 m; Z = 0,00 m)

Depth [m]	Effective Stress [kPa]	Hydraulic head [m]	Loading [kPa]	Settlement [m]
-4,300	1,801	-4,300	1,800	0,050
-4,400	3,099	-4,400	1,799	0,049
-4,500	4,393	-4,500	1,793	0,049
-4,550	5,035	-4,550	1,785	0,049
-4,600	5,674	-4,600	1,774	0,049
-4,700	5,940	-4,600	1,740	0,048
-4,800	9,197	-4,600	4,697	0,048
-4,800	9,197	-4,600	4,697	0,048
-4,900	9,887	-4,600	4,647	0,048
-5,000	10,567	-4,600	4,587	0,047
-5,100	11,227	-4,600	4,507	0,047
-5,125	11,388	-4,600	4,483	0,047
-5,200	11,866	-4,600	4,406	0,047
-5,300	12,491	-4,600	4,291	0,047
-5,450	15,374	-4,600	6,064	0,046
-5,450	15,374	-4,600	6,064	0,046
-5,475	15,530	-4,600	6,035	0,046
-5,500	15,686	-4,600	6,006	0,046
-5,500	15,686	-4,600	6,006	0,046
-5,750	16,201	-4,600	5,721	0,039
-6,000	16,687	-4,600	5,407	0,033
-6,000	16,687	-4,600	5,407	0,033
-6,250	18,647	-4,600	5,117	0,032
-6,500	20,662	-4,600	4,882	0,032
-6,500	20,662	-4,600	4,882	0,032
-7,100	22,998	-4,680	4,498	0,024
-7,600	25,065	-4,747	4,299	0,018
-8,100	27,192	-4,813	4,159	0,013
-8,700	29,790	-4,893	4,037	0,007
-8,700	29,790	-4,893	4,037	0,007
-9,100	30,581	-4,947	3,974	0,004
-9,500	31,382	-5,000	3,922	0,001
-9,500	31,382	-5,000	3,922	0,001
-10,250	38,802	-5,000	3,842	0,001
-11,250	48,719	-5,000	3,759	0,001
-12,250	58,651	-5,000	3,691	0,001

Depth [m]	Effective Stress [kPa]	Hydraulic head [m]	Loading [kPa]	Settlement [m]
-13,250	68,591	-5,000	3,631	0,000
-14,250	78,533	-5,000	3,573	0,000
-14,750	83,505	-5,000	3,545	0,000
-15,500	90,963	-5,000	3,503	0,000
-16,500	100,906	-5,000	3,446	0,000
-17,500	110,847	-5,000	3,387	0,000
-18,500	120,787	-5,000	3,327	0,000
-19,500	130,726	-5,000	3,266	0,000
-20,000	135,694	-5,000	3,234	0,000

4 Settlements

4.1 Settlements

Vertical number	X co-ordinate [m]	Z co-ordinate [m]	Surface level [m]	Settlement [m]
1	-8,00	0,00	-4,30	0,050
2	-5,00	0,00	-4,30	0,068
3	0,00	0,00	-4,30	0,069
4	5,00	0,00	-4,30	0,068
5	8,00	0,00	-4,30	0,050

4.2 Residual Times

Vertical number	Time [days]	Settlement [m]	Part of final settlement [%]	Residual settlements [m]
1	365	0,035	71,083	0,014
2	365	0,047	69,774	0,020
3	365	0,048	69,694	0,021
4	365	0,047	69,774	0,020
5	365	0,035	71,083	0,014

5 Warnings and errors

List of non-fatal warnings and errors generated during calculation.

1 Model Koppejan is not ideal for unloading (e.g. load removal, temporary dewatering, gradual submerging). If As is much larger than Cs', unloading will yield almost no effect on creep. Switch to the NEN-Bjerrum or abc Isotache model for improved predictions.

2 Non-uniform load [1]: Co-ordinate is below surface (2)

3 Non-uniform load [1]: Co-ordinate is below surface (3)

4 Non-uniform load [2]: Co-ordinate is below surface (1)

5 Non-uniform load [2]: Co-ordinate is below surface (2)

6 Non-uniform load [2]: Co-ordinate is below surface (3)

7 Non-uniform load [2]: Co-ordinate is below surface (4)

End of Report

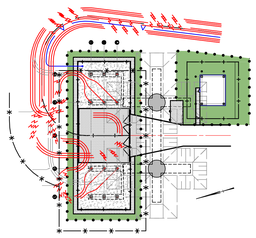

Overzicht OSP bij mast 109
Schaal 1:500

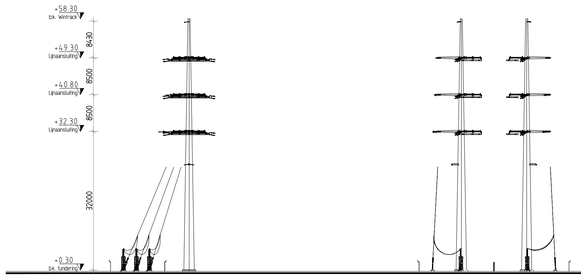

Zijaanzicht
Schaal 1:500

Vooraanzicht
Schaal 1:500

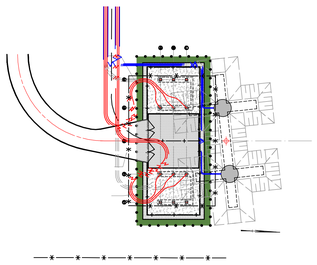

Overzicht OSP bij mast 123
Schaal 1:500

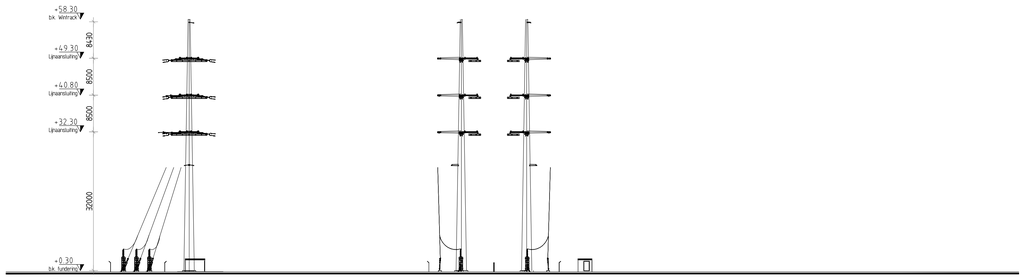

Zijaanzicht
Schaal 1:500

Vooraanzicht
Schaal 1:500

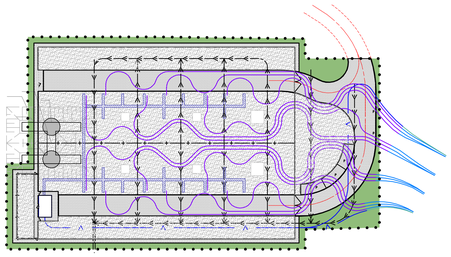

Overzicht OSP4 bij mast 154
Schaal 1:500

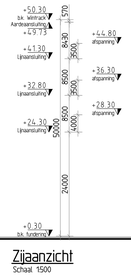

Vooraanzicht
150kV zijde
Schaal 1:500

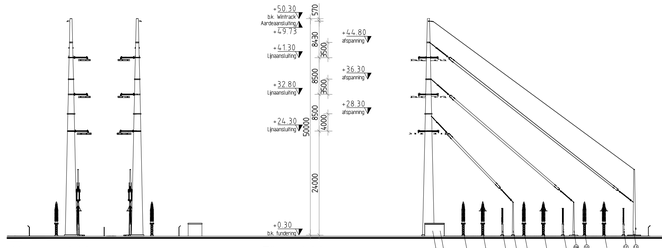

Zijaanzicht
Schaal 1:500

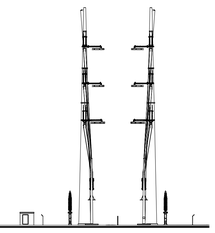

Vooraanzicht
380kV zijde
Schaal 1:500

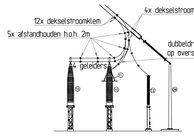

Zijaanzicht
Zakenden 380kV zijde
Schaal 1:100

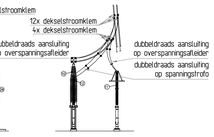

Vooraanzicht
Zakenden 380kV zijde
Schaal 1:100

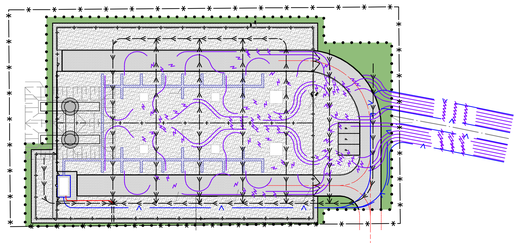

Overzicht OSP5 bij mast 153
Schaal 1:500

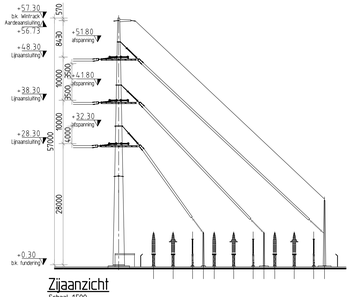

Zijaanzicht
Schaal 1:500

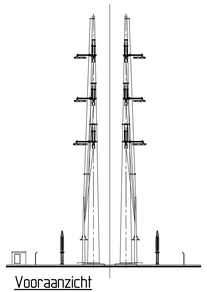

Vooraanzicht
Schaal 1:500

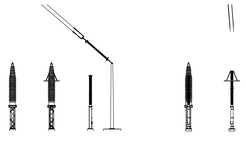

Zijaanzicht
Zakenden 380kV zijde
Schaal 1:100

TOPOGRAFISCH FRAGMENT

Schaal 1:50.000

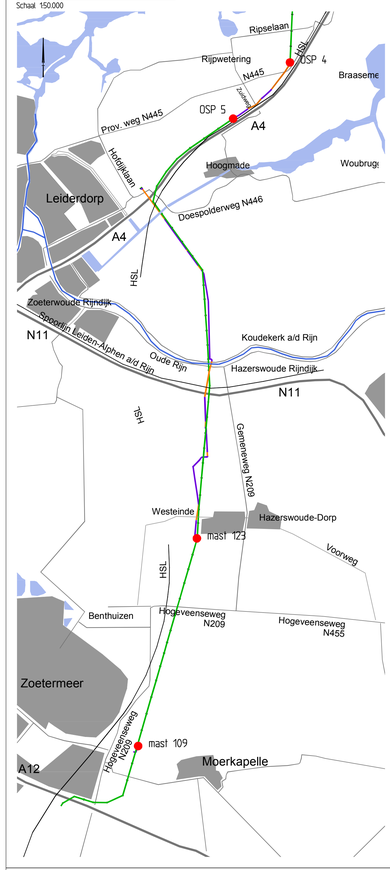

OPMERKINGEN:

- Overzicht: Maten in meters tenzij anders aangegeven;
- Aanzichten: Maten in millimeters tenzij anders aangegeven;
- Hoogtematen in meters ten opzichte van NAP;
- Aanzichten gebaseerd op:
  - 000.007.40.0041215 120471-M92-00-01-002_VOOR.pdf, versie 0, d.d. 31-08-2012;
  - 000.007.40.0041232 120471-M106-00-01-002_V00.pdf, versie 0, d.d. 31-08-2012;
  - 000.007.40.0041938 120471-OSP4-00-01-002_V00.pdf, versie 0, d.d. 31-08-2012;
  - 000.007.40.0041942 120471-OSP5-00-01-002_V00.pdf, versie 0, d.d. 31-08-2012;

Combining Knowledge and Experience

bam COFELY FABRICOM

Randstad 380kV Noordring

Controleur	P. de Jager	Vrijgegeven door	E. Duwel

Rev.	Wijziging	Datum	Naam
03			
02	opnieuw plaatsen teksten	14-02-2014	W. Vissers
01	reload x-refs , laagdikte	12-02-2014	K. Brouwers

Omschrijving: Definitief Ontwerp
Opstijgpunten
Aanzichten opstijgpunten

Project: Randstad 380kV Noordring

Schaal	1:200/1:100	Formaat	A0
Naam	W. Vissers	Datum	01-11-2013

TenneT Taking power further

Tekeningnummer: R3N-TEK-0136 blad 001

AutoCAD filename:

Sjasher:

Constructieberekening fundaties OSP

Project:
Randstad 380kV Noordring

Opdrachtgever:
TenneT TSO

Revisie	Datum	Wijzigingen ten opzichte van vorige revisie
00	19-07-2013	Eerste uitgave
01	06-08-2013	Definitief. Tweede uitgave
02	04-10-2013	T.b.v. 3e uitgave
03.01	01-11-2013	T.b.v. 4e uitgave

Documentnummer: R3N-OWR-0034

Opsteller	*Controleur*	*Vrijgever*
A.L.A. van Noort Constructeur	P. de Jager Ontwerpmanager	Arjan Hogenboom Project Manager

Distributie

Naam	Bedrijf
Extern	
Guido Volman	TenneT TSO
Intern	
Arjan Hogenboom	BAM
Pieter de Jager	BAM
Eric van Rooijen	BAM
David van Loenen	BAM
Rob Bakker	BAM
Erwin ten Cate	BAM
Michael deSmet	Fabricom
Hein Pijnappel	Mott McDonald

Beheer

De documentbeheerder van de combinatie verzorgt de distributie. Alleen houders van een geregistreerde kopie ontvangen automatisch aanvullingen en/of wijzigingen. Het is de verantwoordelijkheid van de houders het document up to date te houden. De laatste versie is altijd beschikbaar in ThinkProject!

Indien documenten worden geprint, geldt het volgende: een geregistreerde kopie is geldig vanaf de datum van uitgifte. Bij uitgifte van een document met een hoger revisienummer verliest de voorgaande versie automatisch haar geldigheid. Kopiehouders dienen het voorblad van een ongeldige versie te markeren met een diagonale lijn samen met de tekst 'vervallen'.

Neem bij twijfel over de geldende versie contact op met de documentbeheerder.

Inhoudsopgave

1. Inleiding 4
1.1. Gerelateerde documenten 4
1.2. Openstaande punten 4
1.3. Revisiebeheer 4
2. Uitgangspunten en eisen 5
2.1. Uitgangspunten 5
2.2. Gehanteerde normen 5
2.3. Gevolgklasse en ontwerplevensduur 5
2.4. Eisen 5
2.5. Vermoeiing 5
2.6. Materiaalgegevens 5
2.6.1. Milieuklasse 5
2.6.2. Betondekking 6
2.6.3. Staalkwaliteiten 6
3. Belastingen 7
3.1. Veldhuisje 7
3.2. Oliedrukhuisje 7
3.3. Pilonen 7
3.4. Wisselende belastingen en vermoeiing 8
4. Belastingcombinaties 12
5. Berekening fundaties 14
5.1. Fundatie Veldhuisje 14
5.2. Fundatie oliedrukhuisje 14

1. INLEIDING

De komende jaren werken het ministerie van Economische Zaken en TenneT aan de aanleg van een nieuwe 380 kV hoogspanningsverbinding in de Randstad. De nieuwe verbinding stelt de voorziening van elektriciteit in de Randstad veilig.

Het ontwerptracé van de nieuwe Randstad 380 kV verbinding is sinds eind 2008 bekend. De plannen gaan uit van twee ringen, tussen Wateringen en Zoetermeer (de Zuidring) en tussen Zoetermeer en Beverwijk (de Noordring). Eind 2012 heeft Tennet de aanbesteding opgestart voor het gedeelte van de Noordring tussen station Vijfhuizen en Bleiswijk. Het contract is opgedeeld in twee percelen, waarbij de grens ligt bij Zuidelijke Ringvaart. Dit document heeft betrekking op perceel 2 (het zuidelijke gedeelte).

BAM heeft op 8 juli 2013 het contract ondertekend met TenneT voor het ontwerp en realiseren van perceel 2. Het voorliggende document is onderdeel van het Definitief Ontwerp en behandelt de fundaties van de OSP. Dit betreft niet de masten welke ter plaatse van een OSP zijn gelokaliseerd. Deze zijn berekend in een afzonderlijk document evenals de funderingspalen.

1.1. GERELATEERDE DOCUMENTEN

R3N-OWN-0001 Ontwerpnota Systeem Noordring
R3N-OWR-0007 Constructieberekening mastfundaties type F
R3N-OWR-0008 Ontwerpberekening paalfundering mastfundaties
R3N-OWR-0033 Bepaling belastingen mastfundaties
R3N-OWR-0039 Bemalingsadvies beheersgebied Rijnland
R3N-OWR-0040 Bemalingsadvies beheersgebied Schieland en de Krimpenerwaard

1.2. OPENSTAANDE PUNTEN

De volgende punten dienen in een latere fase nader uitgewerkt te worden:

- Aarding
- Temperatuur invloeden op fundering
- Model verbeteren d.m.v. dummy elementen aan bovenzijde palen
- Invloed krimp op fundering
- Optimalisatie wapening
- Optimalisatie palen
- Detailontwerp prefab beton

1.3. REVISIEBEHEER

Dit is de vierde uitgave, oliedrukhuisje toegevoegd

2. UITGANGSPUNTEN EN EISEN

2.1. UITGANGSPUNTEN

Voor de OSP worden enkel de fundering van de volgende onderdelen beschouwd:
- het veldhuisje, prefab betonbak op 4 palen, alleen bij 380 kV OSP
- oliedrukhuisje, prefab betonbak op 4 palen (bij mast 109)
- fundering t.b.v. de eindsluitingen ontworpen. Hiervoor is eerst meer grondonderzoek nodig.

2.2. GEHANTEERDE NORMEN

- Eurocode serie NEN-EN-1990 tm 1997
- NEN-EN50341

2.3. GEVOLGKLASSE EN ONTWERPLEVENSDUUR

De veldfundaties vallen in gevolgklasse CC2 (voorheen veiligheidsklasse 3). De ontwerplevensduur is 50 jaar.

2.4. EISEN

De eisen zoals vermeld in ontwerpnota R3N-OWN-0001 §3 zijn gehanteerd bij het ontwerp.

2.5. VERMOEIING

De aan te leggen fundamenten worden gedimensioneerd op een vermoeiingsbelasting. De wisseling van belasting komt uit wind. Het aantal en de grote van de wisselingen gedurende 50 jaar is bepaald conform de ROK. De toetsingsprocedure van de constructie conform NEN-EN 1992-1-1:2005.

2.6. MATERIAALGEGEVENS

In onderstaande paragrafen worden de gehanteerde materiaaleigenschappen benoemd. Betonkwaliteiten Voor het constructief beton worden bij de detaillering de volgende sterkteklassen aangehouden. Bij gescheurd beton wordt in eerste instantie gerekend met $E_{betron;gescheurd} = 1/3\ E_{beton;ongescheurd}$.

Onderdeel	Sterkteklasse	Elastisciteitsmodulus [N/mm²]		
		ongescheurd	Gescheurd lage E	Gescheurd matige E
in het werk gestort gewapend beton:	C30/37	31.000	11.000	22.000
geprefabriceerd voorgespannen beton (palen):	C45/55	36.000		

Tabel 2.1-1 Betonkwaliteiten

2.6.1. MILIEUKLASSE

Voor de betondelen welke meer dan 1,0 m onder maaiveld liggen geldt milieuklasse XC2
Voor de hoger gelegen betondelen is de milieuklasse afhankelijk van de aanwezigheid van openbare wegen. De wegen naar de OSP's zullen niet gestrooid worden en bovendien nauwelijks bereden worden, waardoor het wegspatten van water met dooizouten niet aan de orde is. De afstanden in onderstaande schets geldt voor snelwegen, bij ander wegen zou deze eventueel kleiner kunnen.

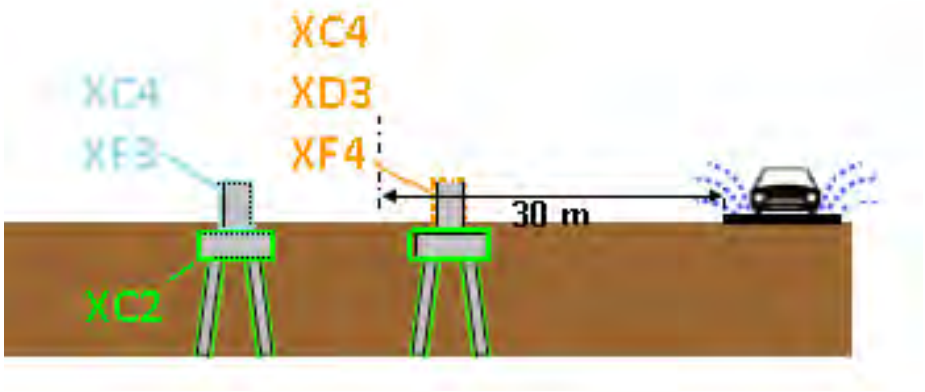

2.6.2. BETONDEKKING

Betondekking conform NEN EN 1992-1-1:2011

$$c_{min} = \max\{c_{min,b};\ c_{min,dur} + \Delta c_{dur,\gamma} - \Delta c_{dur,st} - \Delta c_{dur,add};\ 10\ mm\} \qquad (4.2)$$

waarin:

$c_{min,b}$	is de minimumdekking op basis van de aanhechtingseisen, zie 4.4.1.2 (3);
$c_{min,dur}$	is de minimumdekking op basis van de milieu-omstandigheden, zie 4.4.1.2 (5);
$\Delta c_{dur,\gamma}$	is een aanvullende veiligheidsmarge, zie 4.4.1.2 (6);
$\Delta c_{dur,st}$	is een reductie van de minimumdekking bij gebruik van roestvast staal, zie 4.4.1.2 (7);
$\Delta c_{dur,add}$	is een reductie van de minimumdekking bij gebruik van aanvullende bescherming, zie 4.4.1.2 (8).

De verwachting is dat $c_{min;b}$ maatgevend wordt. Deze waarde is afhankelijk van de staafdiameter, welke nog niet bekend is. Betondekking wordt in UO bepaald.

2.6.3. STAALKWALITEITEN

Voor het wapeningsstaal worden de volgende staalkwaliteiten aangehouden:

Omschrijving	Kwaliteit
betonstaal (staven)	B500 B

Tabel 2.6.3 Staalkwaliteiten

3. BELASTINGEN

De belastingen zijn gegeven door TenneT.

3.1. VELDHUISJE

In het veldhuisje wordt gerekend met een last van 10 kN/m^2 op de vloer. (aanname)

3.2. OLIEDRUKHUISJE

In het veldhuisje wordt gerekend met een last van 10 kN/m^2 op de vloer. (aanname)

3.3. PILONEN

Hoge piloon met afspanning 380kV en bliksemdraad

Afspanning 380kV en BL.draad

Componentbelasting

Fg = Te bepalen door leverancier

Fw = verwerkt in Fv en Fg

Bliksemdraad belasting Geleiderbelasting

Fv(bl) = 4 kN (Uplift)
Fh(bl) = 6.5 kN
Fd(bl) = 1.6 kN

Geleiderbelasting

Fv(gl) = 17.4 kN (Uplift)
Fh(gl) = 28.0 kN
Fd(gl) = 8.5 kN

Maatvoering

L_1 = 300 mm
L_2 = 15000 mm
L_3 = 7500 mm

Legenda

Fg = eigen gewicht component/geleider
Fw = windbelasting
Fv = Verticale belasting (uplift)
Fd = Dwarskracht

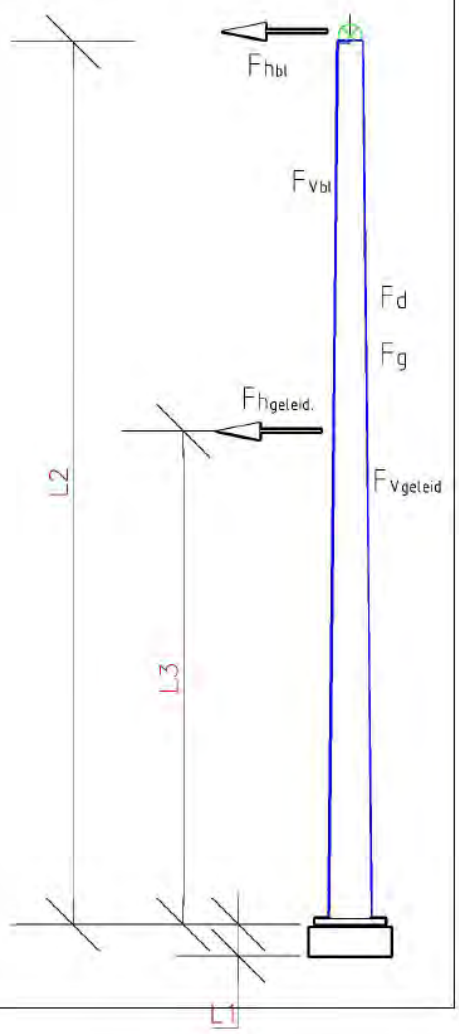

Piloon met afspanning 380 kV

Afspanning 380kV

Componentbelasting

Fg = 2500 N

Fw = 4000 N

Geleiderbelasting

Fv(gl) = 17.4 kN (Uplift)
Fh(gl) = 27.4 kN
Fd(gl) = 7 kN

Maatvoering

L_1 = 300 mm
L_3 = 15000 mm
L_3 = 7500 mm

Legenda

Fg = eigen gewicht component/geleider
Fw = windbelasting
Fv = Verticale belasting (uplift)
Fd = Dwarskracht

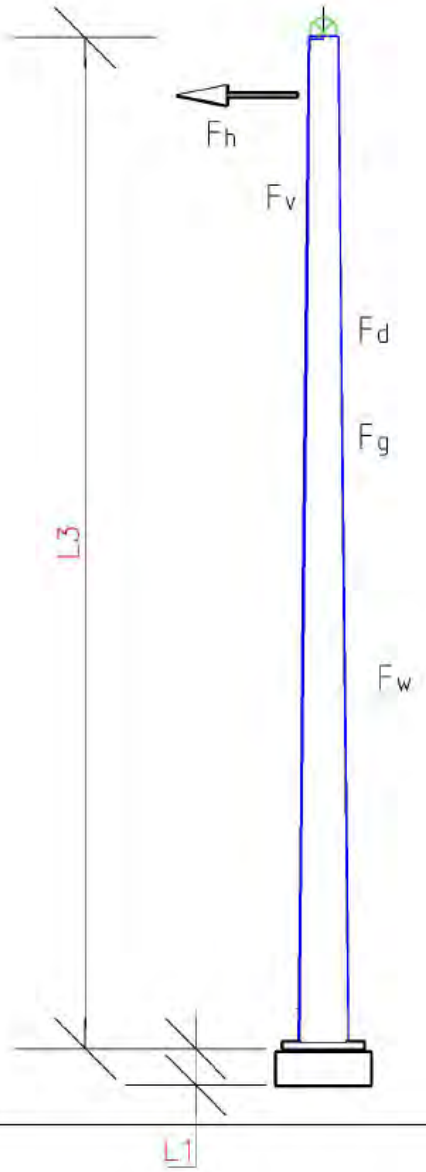

3.4. WISSELENDE BELASTINGEN EN VERMOEIING

Door de wisselende belastingen van wind dient belasting door vermoeiing te worden meegenomen. Bij vermoeiing is het aantal wisselingen en de grootte van de wisseling van belang. In de NEN-EN 1991-1-4:2005 is in bijlage B.3 een figuur opgenomen waarin de verhouding tussen de grootte van de windlast en het aantal keren dat deze optreedt weergegeven.

B.3 Aantal belastingen voor dynamische respons

(1) Figuur B.3 geeft het aantal keren N_g dat de waarden ΔS van een windeffect worden bereikt of overschreden gedurende een periode van 50 jaar. ΔS wordt uitgedrukt in percentage van de waarde S_k, waar S_k het effect is van een windbelasting met een herhalingstijd van 50 jaar.

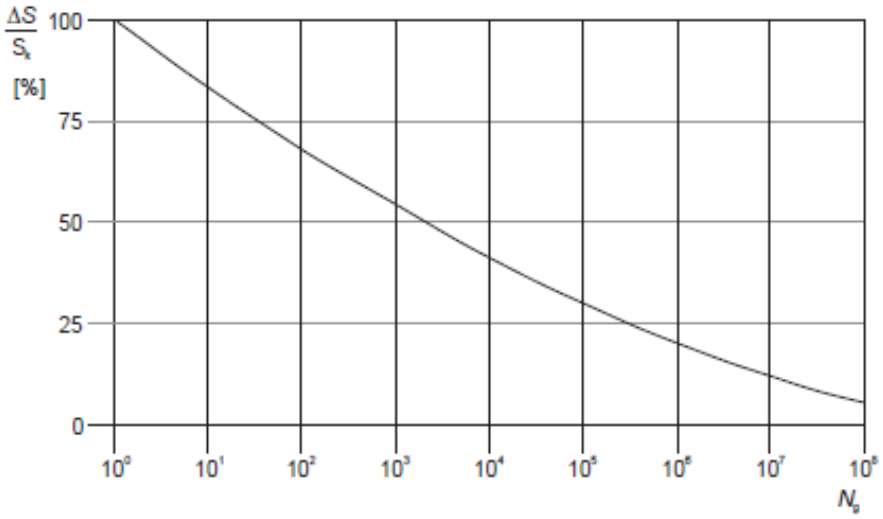

Figuur B.3 — Aantal windvlaagbelastingen N_g voor een effect $\Delta S/S_k$ gedurende een herhalingstijd van 50 jaar

De relatie wordt omschreven met de volgende uitdrukking

$$\frac{\Delta S}{S_k} = 0{,}7 \cdot (\log(N_g))^2 - 17{,}4 \cdot \log(N_g) + 100 \qquad \text{(B.9)}$$

Bij vermoeiing wordt bij een bepaald spanningsniveau het aantal wisselingen op dit spanningsniveau bepaald en vervolgens wordt dit vergeleken met het aantal toelaatbare wisselingen op dat spanningsniveau. Door dit voor de voorkomende spanningsniveaus te doen is de weerstand tegen vermoeiing te controleren.

In de ROK van RWS is bovenstaande verdeling gediscretiseerd tot onderstaande tabel:

Tabel 5-1: Aantal wisselingen per windbelasting (referentieperiode 50 jaar)

ΔS / S_k (%)	n
100	1
98	1
90	8
75	90
61	900
48	9000
36	90000
25	900000
16	9000000
9	90000000

Van beton en wapeningsstaal is bekend hoeveel wisselingen bij een bepaald spanningsniveau toelaatbaar zijn. S_K is de spanning met een herhalingstijd van 50 jaar (de spanning waarop de constructie ontworpen is).

Met bovenstaande gegevens is te bepalen welke maximale spanning t.g.v. wind eens in de 50 jaar toelaatbaar is opdat de constructie ook voldoende weerstand tegen vermoeiing heeft.

Wapening

De totale schade van de belastingen dient volgens de beschadigingsregel van Miner kleiner dan 1 te zijn.

De toetsingsprocedure per wisseling conform NEN-EN 1992-1-1:2005, §6.8.4:
Voor de wapening is gekeken naar de toelaatbare spanning voor:

- Rechte staven
- Staven gebogen met een doordiameter 2,5*D
- Gelaste staven

Er volgt (zie berekening hieronder) dat voor gewone rechte staven er geen beperking is, echter gebogen of gelaste staven hebben de volgende spanningsbeperking

Buigdoorn 2,5ø → 244 N/mm^2
Buigdoorn 5ø → 283 N/mm^2
Gelaste staven → 317 N/mm^2

Omdat bij de toetsing van vermoeiing een ULS toestand met veiligheid 1,0 wordt getoetst, is de spanning altijd minimaal een factor van ca. 1,3 lager dan de normale ULS toestanden.

Bij een toelaatbare spanning van 435 N/mm^2 in ULS volgt bij toetsing op vermoeiing een spanning van maximaal 335 N/mm^2. De toelaatbare spanningen bij vermoeiing zijn nog iets lager. Hier dient in de detaillering rekening mee gehouden te worden. Een toetsing achteraf zal volstaan.

Rechte staven

maximale gebruiksspanning			435	
Toelaatbare spanningswisseling bij N* wisselingen			162,5	
		k1	5	
		k2	9	
		N*	1,00E+06	

aantal wisselingen [-]	ROK dS/S [-]	Wisseling spanning wapening [N/mm2]	Toelaatbaar aantal wisselingen [-]	Schade [-]
1	100	435	7275	0,000137
1	98	426	8048	0,000124
8	90	392	12320	0,000649
90	75	326	30656	0,002936
900	61	265	86133	0,010449
9000	48	209	285505	0,031523
90000	36	157	1394937	0,064519
900000	25	109	37137862	0,024234
9000000	16	70	2061565470	0,004366
90000000	9	39	365674259232	0,000246
			Totale schade	**0,139183665**

Staven gebogen met doorndiameter 2,5*D

maximale gebruiksspanning			244	
Toelaatbare spanningswisseling bij N* wisselingen			67,4	
		k1	5	
		k2	9	
		N*	1,00E+06	

aantal wisselingen [-]	ROK dS/S [-]	Wisseling spanning wapening [N/mm2]	Toelaatbaar aantal wisselingen [-]	Schade [-]
1	100	244	1613	0,000620
1	98	239	1784	0,000560
8	90	220	2731	0,002929
90	75	183	6796	0,013243
900	61	149	19095	0,047134
9000	48	117	63292	0,142197
90000	36	88	266714	0,337440
900000	25	61	2466861	0,364836
9000000	16	39	136938283	0,065723
90000000	9	22	24289699180	0,003705
			Totale schade	**0,978388484**

Staven gebogen met doorndiameter 5*D

maximale gebruiksspanning			283	
Toelaatbare spanningswisseling bij N* wisselingen			78,0	
		k1	5	
		k2	9	
		N*	1,00E+06	

aantal wisselingen [-]	ROK dS/S [-]	Wisseling spanning wapening [N/mm2]	Toelaatbaar aantal wisselingen [-]	Schade [-]
1	100	283	1591	0,000629
1	98	277	1760	0,000568
8	90	255	2694	0,002970
90	75	212	6702	0,013428
900	61	173	18832	0,047792
9000	48	136	62422	0,144181
90000	36	102	263044	0,342148
900000	25	71	2406099	0,374050
9000000	16	45	133565305	0,067383
90000000	9	25	23691410595	0,003799
			Totale schade	**0,996946687**

Gelaste staven

maximale gebruiksspanning			317	
Toelaatbare spanningswisseling bij N* wisselingen			58,5	
		k1	3	
		k2	5	
		N*	1,00E+07	
	ROK	Wisseling spanning	Toelaatbaar aantal	
aantal wisselingen	dS/S	wapening	wisselingen	Schade
[-]	[-]	[N/mm2]	[-]	[-]
1	100	317	62848	0,000016
1	98	311	66775	0,000015
8	90	285	86211	0,000093
90	75	238	148972	0,000604
900	61	193	276886	0,003250
9000	48	152	568285	0,015837
90000	36	114	1347046	0,066813
900000	25	79	4022257	0,223755
9000000	16	51	20411885	0,440920
90000000	9	29	362468668	0,248297
			Totale schade	**0,999600179**

4. BELASTINGCOMBINATIES

Belastingcombinaties conform NENEN 50341-3-15 paragraph 4.2, table 4.2.11/NL.1, 4.2.11/NL.3 en 4.2.11/NL.4

Table 4.2.11/NL.1 - Partial factor and combination factor (ultimate limit state)

Load case and temperature	Value for γ_G, γ_Q, χ_Q and γ_A for the ultimate limit state				
	γ_G [1]	γ_Q or χ_Q [3]			γ_A
Loads	G_K	Q_{PK}	Q_{WK}	Q_{iK}	A_k
1a Wind, 10° C	1,2	-	1,5	-	-
1b Wind, - 20 °C	1,2	-	0,3	-	-
2 Not relevant	-	-	-	-	-
3 Wind+ice, - 5 °C	1,2		0,45	1,5	
4 Construction/maintenance + 5 °C	1,2	1,5	0,3	-	
5a Torsional, + 10 °C	1,0	1,0 [2]	-	-	1,0
5b Not relevant	-	-	-	-	-
6 Permanent, + 10 °C	1,35	-	-	-	-
7 Special, + 10 °C	1,0	-	-	-	1,0

[1] If permanent loads have a positive effect on the structural forces e.g. uplift forces on foundation $\gamma_G = 0,9$.
[2] Only the load at the end of the crossarm, see 4.2.6.
[3] $\chi_Q = \chi_0 - \gamma_Q$, with reference to ENV 1991-1 "Basis of Design".

Table 4.2.11/NL.3 - Partial factor and combination factor (special limit state)

Load case and temperature	Value for γ_G, γ_Q, χ_Q and γ_A for the ultimate limit state during specific circumstances				
	γ_G 1)	γ_Q or χ_Q 4),5)			γ_A
Loads	G_K	Q_{PK}	Q_{WK}	Q_{iK}	A_K
1a Wind, 10° C	1,2	-	0,78	-	-
1b Wind, - 20° C	1,2	-	0,24	-	-
3 Wind+ice - 5° C	1,2	-	0,36	0,34 0,12	-
4 Construction/maintenance + 5° C	1,2	1,2	0,24	-	-

1) If permanent loads have a positive effect on the structural forces e.g. uplift forces on foundation γ_G = 0,9.
2) For ice region B.
3) For ice region C.
4) $\chi_Q = \chi_0 \gamma_Q$, with reference to ENV 1991-1 "Basis of Design".
5) γ_Q = 1,2, based on the assumption that the specific circumstances exist during a period of maximum 1 year.

Table 4.2.11/NL.4 - Partial factor and combination factor (serviceability limit state)

Load case and temperature	Value for γ_G, γ_Q, χ_Q and γ_A for the serviceability limit state				
	γ_G	γ_Q or χ_Q			γ_A
Loads	G_K	Q_{PK}	Q_{WK}	Q_{iK}	A_K
1a Wind, 10° C	1,0	-	1,0	-	-
1b Wind, - 20° C	1,0	-	0,2	-	-
3 Wind+ice - 5° C	1,0	-	0,3	1,0	-
4 Construction/maintenance + 5° C	1,0	1,0	0,2	-	-

De gegeven last uit de lijnen zijn niet nader gespecificeerd. De volgende combinaties worden gebruikt voor de fundaties van de pilonen. Voor de oliedruk en veldhuisjes worden de combinaties uit de eurocode gevolgd, behorende bij CC2.

		Permanente last	Var last uit lijn	Windbelasting	
1. Fund..Comb.	ULS	1,35			
2. Fund. Comb.	ULS	1,2	1,5	0,45	
3. Karakteristiek	SLS	1,0	1,0	0,3	
4. Frequent	SLS	1,0	1,0	0,3	

5. BEREKENING FUNDATIES

5.1. FUNDATIE VELDHUISJE

De veldhuisjes bestaan uit een prefab betonconstructie welke op 4 poeren wordt geplaatst.
De prefab word door de leverancier berekend.

Paalbelasting:

Eigen gewicht huisje

Vloer, d=180 mm, 0,18 * 5 * 3 * 24 =	64,8 kN	
Wanden d=110+70 mm, 2 * (5 + 3) * 3 * 0,18 * 24 =	207,4 kN	
dak, d=160 mm, 0,16 * 5 * 3 * 24 =	57,6 kN	
Variabele belasting op vloer 10 kN/m^2, 5*3*10=		150 kN

Windbelasting 1,0 kN/m^2 , 5*3*1*(3/2) / 2,4 = 10 kN (trek/druk)

Totale paalbelasting (1,2 * 330 + 1,5 * 150) / 4 + 1,5 * 0,2 * 10 / 2 = 160 kN / paal

5.2. FUNDATIE OLIEDRUKHUISJE

De oliedrukhuisjes bestaan uit een prefab betonconstructie welke op 4 poeren wordt geplaatst.
De prefab word door de leverancier berekend.

Paalbelasting:

Eigen gewicht huisje

Vloer, d=180 mm, 0,18 * 6 * 7 * 24 =	181,5 kN	
Wanden d=110+70 mm, 2 * (6 + 7) * 3 * 0,18 * 24 =	337,0 kN	
dak, d=160 mm, 0,16 * 6 * 7 * 24 =	161,3 kN	
Variabele belasting op vloer 10 kN/m^2, 6*7*10=		420 kN

Windbelasting 1,0 kN/m^2 , 7*3*1*(3/2) / 5,5 = 5,7 kN (trek/druk)
Wind verwaarloosbaar

Totale paalbelasting (1,2 * 680 + 1,5 * 420) / 4 =370 kN / paal

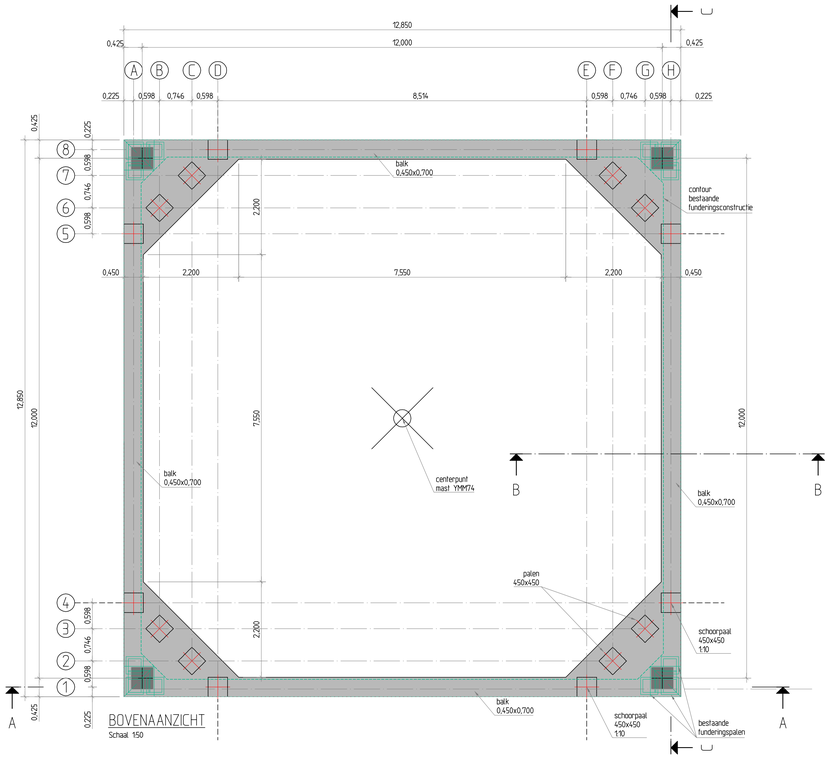

BOVENAANZICHT
Schaal 1:50

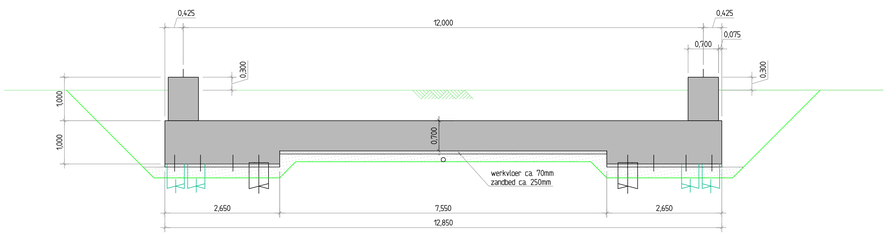

DOORSNEDE A-A
Schaal 1:50

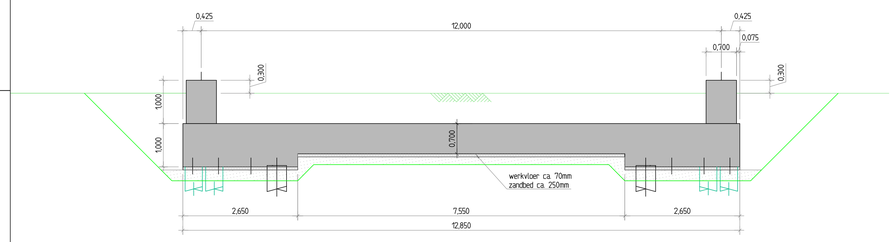

DOORSNEDE C-C
Schaal 1:50

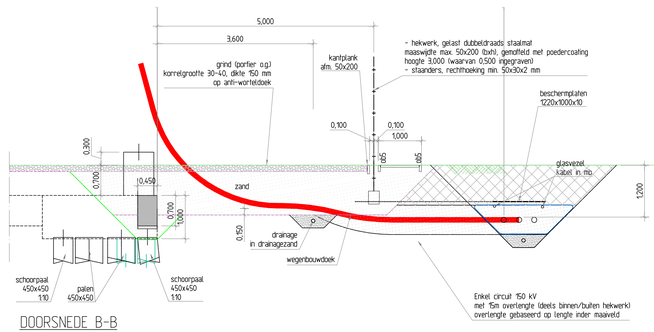

DOORSNEDE B-B
Schaal 1:50

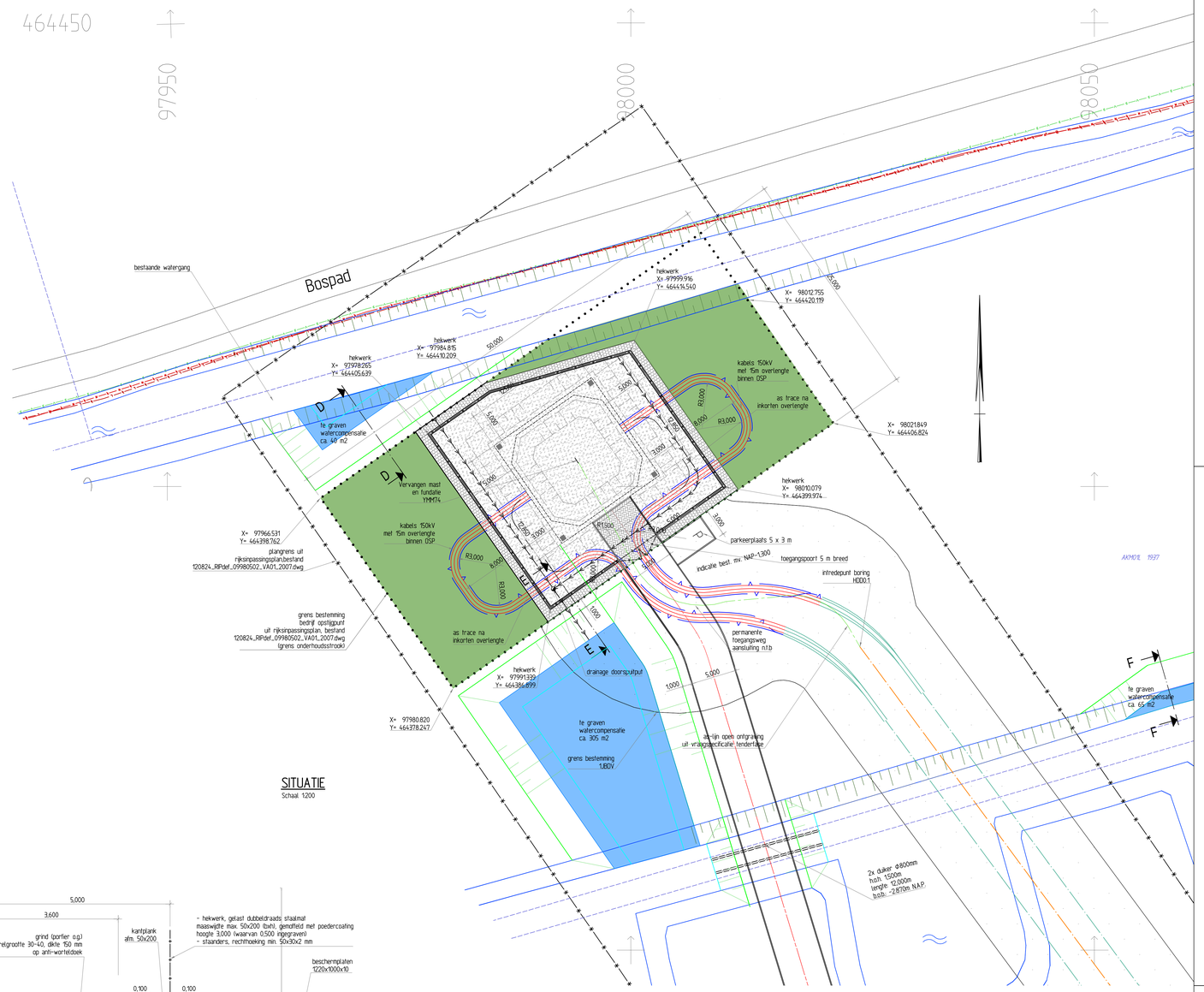

SITUATIE
Schaal 1:200

VERKLARING - ALGEMEEN

- Bestaande topografie
- Waterlijn
- Kadastrale grens en sectie/perceelnummer; uit bestand Kadperc_Bis_Zuid_Ringvaart_1905.DWG (Tennet)
- Plangrens uit rijksinpassingsplan

VERKLARING - LEIDINGWERK:

- Aanbrengen kabel 150 kV
- Aanbrengen mantelbuis t.b.v. glasvezel data/signaalkabel
- Te verwijderen bovengrondse trace 150 kV
- Aanbrengen gestuurde boring 150 kV

VERKLARING - KLIC

- GASLEIDING
- GASLEIDING GASLINIE
- GASLEIDING HD
- GASLEIDING LD
- WATERLEIDING
- WARMTENET
- KOUDENET
- CHEMIE
- BRANDSTOF TRANSPORTLEIDING
- RIOLERING TRANSPORTLEIDING
- HEMELWATER TRANSPORTLEIDING
- VUILWATER TRANSPORTLEIDING
- DRAINAGE
- PERSLEIDING
- VACUUMLEIDING
- DUIKER
- STRAATKOLK
- TROTTOIRKOLK
- HWA PUT
- HWA POMPPUT
- VWA PUT
- VWA POMPPUT
- DRAINAGE PUT
- PERSLEIDING RIOOLPUT
- PERSLEIDING POMPPUT
- GEMAAL
- MANTELBUIS
- GLASVEZEL
- CAI
- DATA
- HOOGSPANNING
- MIDDENSPANNING
- LAAGSPANNING
- VRI (VERKEERSREGELINSTALLATIE)
- DV (OPENBARE VERLICHTING)
- PROXRAIL OVERIG
- KABELKOKER
- KABELTRAC/# VERVALLEN
- GESTUURDE BORING DERDEN
- ZINKER
- GEULNUMMER
- TERREINKAST
- TRANSFORMATORSTATION
- LICHTMAST

TOPOGRAFISCH FRAGMENT
Schaal 1:50.000

OPMERKINGEN:

Positie bestaande funderingsconstructie in het werk vast te stellen.

Toe te passen palen beton 450mm x 450mm, lengte n.t.b.

Toe te passen betonwerk:
- Betonkwaliteit C35/45, milieuklasse XC2
- Wapeningsstaal kwaliteit B500B

Wijzigingen versie 03
Watergangen aangepast, ligging permanente toegangsweg gewijzigd, doorsneden toegevoegd

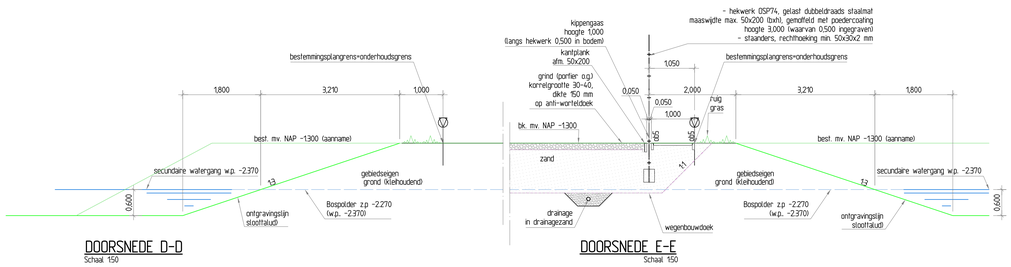

DOORSNEDE D-D
Schaal 1:50

DOORSNEDE E-E
Schaal 1:50

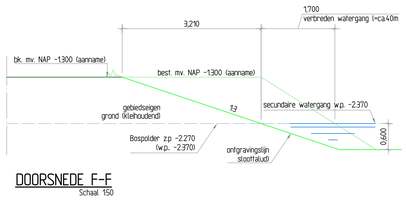

DOORSNEDE F-F
Schaal 1:50

Combining Knowledge and Experience

bam COFELY FABRICOM

Randstad 380kV Noordring

			P. de Jager	E. Duwel
			Certificeur	Vrijgegeven door
Definitief Ontwerp Opslijpunten Inrichting OSP bij mast YMM74	03	Waterganen+ doorsneden	30-07-2014	R.G.J. Caspers
	02	watercompensatie; drainage	13-11-2013	R.G.J. Caspers
	01	zie opmerkingen	04-10-2013	RGJ Caspers
Omschrijving	Rev.	Wijziging	Datum	Naam

Schaal:	1:50 / 1:200	Formaat:	A0
Naam:	R.G.J. Caspers	Datum:	06-08-2013

Project: Randstad 380kV Noordring

TenneT Taking power further

Tekeningnummer: R3N-TEK-0083 blad 001

AutoCAD filenaam:

Systeem:

Bijlage 8
Gegevens tijdelijke 150 kV verbinding

Ontwerp omleiding M53 en M54

Project:
Randstad 380 KV Noordring

Opdrachtgever:
TenneT TSO

Revisie	Datum	Wijzigingen ten opzichte van vorige revisie
00	14-02-2014	Eerste versie
01	04-04-2014	Revisie na keuze voor ondergrondse kabel

Documentnummer: R3N-OWR-0050

Opsteller	*Controleur*	*Vrijgever*
Koen Pieters Project Leider	Pieter de Jager Ontwerp Manager	Erik Duwel Project Manager

Distributie

Naam	Bedrijf
Extern	
Guido Volman	TenneT TSO
Intern	
Erik Duwel	BAM
Pieter de Jager	BAM
Eric van Rooijen	BAM
Rob Bakker	BAM
Erwin ten Cate	BAM
Michaël Desmet	Cofely Fabricom
Koen Pieters	Cofely Fabricom
Hein Pijnappel	Mott McDonald

Beheer

De documentbeheerder van de combinatie verzorgt de distributie. Alleen houders van een geregistreerde kopie ontvangen automatisch aanvullingen en/of wijzigingen. Het is de verantwoordelijkheid van de houders het document up to date te houden. De laatste versie is altijd beschikbaar in ThinkProject!

Indien documenten worden geprint, geldt het volgende: een geregistreerde kopie is geldig vanaf de datum van uitgifte. Bij uitgifte van een document met een hoger revisienummer verliest de voorgaande versie automatisch haar geldigheid. Kopiehouders dienen het voorblad van een ongeldige versie te markeren met een diagonale lijn samen met de tekst 'vervallen'.

Neem bij twijfel over de geldende versie contact op met de documentbeheerder.

Inhoudsopgave

Referentie lijst *3*
1. Inleiding *4*
2. Drie circuit tijdelijke omleiding aan mast 52-55 ..... *5*
2.1. Omgevingsimpact 5
2.2. Lengteprofiel 5
2.3. Mastbeeld 6
2.4. Fundering 7
2.5. Kabel 7
2.6. VNB ombouwplan 8
2.7. Magneetveld berekening 8
2.8. Versterkingen M52 en M55 8
3. Bijlagen *8*
Bijlage 1: Lengte profiel omleiding mast M54 M53 9
Bijlage 2: VNB ombouwplan 10

Referentie lijst

Ref	Document naam
[A]	R3N-TEK-0163-00 Varianten aanp bovengronds 150kV trace tussen mast 121 en 124
[B]	R3N-TEK-00181-00.02 Portalen omleiding M54 en M53 (Grondkabel)
[C]	R3N-PLA-0005-01 VNB Plan
[D]	R3N-PLN-0001Planning
[E]	R3N-OWR-0052-01.01 berekening magnetische veldsterkte omleiding M53 en M54
[F]	R3N-OWR-0054-00.01 Controle berekeningen M52 en M55

1. INLEIDING

De komende jaren werken het ministerie van Economische Zaken en TenneT aan de aanleg van een nieuwe 380 kV hoogspanningsverbinding in de Randstad. De nieuwe verbinding stelt de voorziening van elektriciteit in de Randstad veilig.

Het ontwerptracé van de nieuwe Randstad 380 kV verbinding is sinds eind 2008 bekend. De plannen gaan uit van twee ringen, tussen Wateringen en Zoetermeer (de Zuidring) en tussen Zoetermeer en Beverwijk (de Noordring). Eind 2012 heeft Tennet de aanbesteding opgestart voor het gedeelte van de Noordring tussen station Vijfhuizen en Bleiswijk. Het contract is opgedeeld in twee percelen, waarbij de grens ligt bij Zuidelijke Ringvaart. Dit document heeft betrekking op perceel 2 (het zuidelijke gedeelte).

Het voorliggende document is onderdeel van het definitief ontwerp ten behoeve van de vergunningsaanvragen en behandelt:

- het ontwerp van een 3 circuit noodverbinding tussen mast 52-55 (150kV verbinding) ivm het kruisen van de nieuwe 150/380 verbinding mast 122-123 (oud 92-93).

Na een vergelijkende studie is er geopteerd om de omleiding uit te voeren met een ondergrondse kabel in plaats van een luchtlijn. Alle wijzigingen zijn opgenomen in deze tweede revisie.

2. DRIE CIRCUIT TIJDELIJKE OMLEIDING AAN MAST 52-55

Situatie schets: Aan mast 53-54 zal de nieuwe 150/380kV lijn kruisen met de oude 150kV lijn. Omdat de nieuwe 150/380 kV lijn eerst moet worden opgebouwd vooraleer de oude 150kV lijn uit dienst genomen kan worden is er geopteerd voor een tijdelijke omlegging van de oude lijn tussen mast 52 en 55 zodat de nieuwe lijn zonder snijding van de oude lijn kan worden opgebouwd.

2.1. OMGEVINGSIMPACT

De omleiding komt tot stand door de geleiders tussen M52 en M55 te vervangen door een ondergrondse kabel. Daarvoor zullen er 2 OSP's worden gebouwd die de geleiders met de ondergrondse kabel verbindt. Voor de bouw van elk portaal wordt een werkgebied voorzien van 40 x 40m, daarbij voorzien we een aantal extra zones voor het laten zakken van de geleiders. Beide portalen worden na de werken afgezet met een omheining (~30 x 85 m). Zie ref [A] voor meer detail.

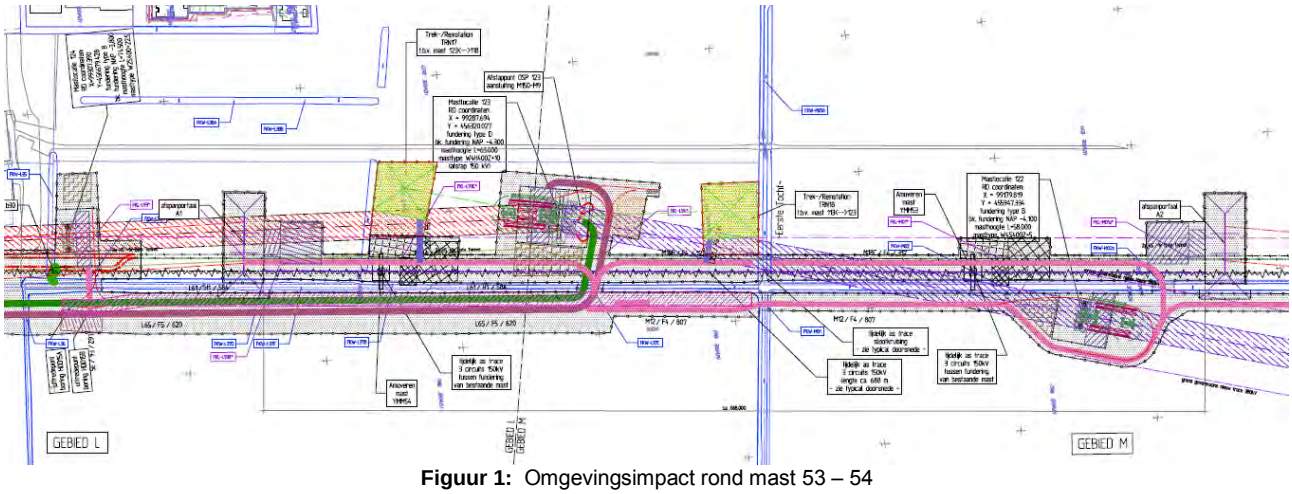

Figuur 1: Omgevingsimpact rond mast 53 – 54

2.2. LENGTEPROFIEL

Voor de hoogte van de omleiding is er rekening gehouden met enkele bepalende obstakels: de Dorpsstraat, N209 en enkele bomen. De vrije ruimte onder de lijnen is altijd groter dan 7m zodat er geen gevaar is voor het verkeer. In bijlage het totale lengte profiel bijlage 1.

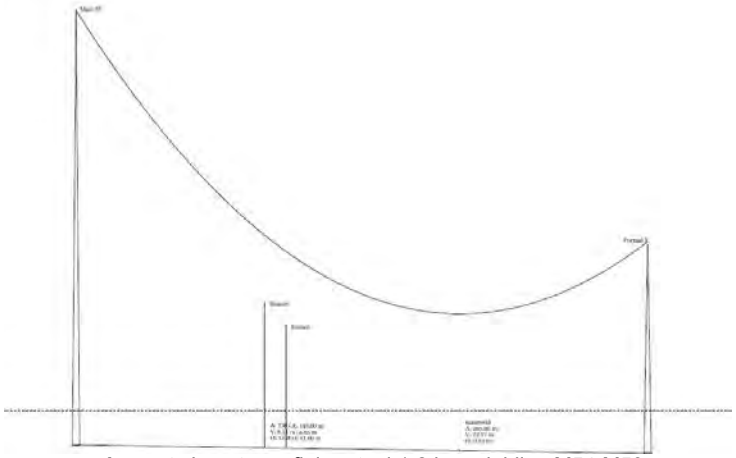

Figuur 2: Lengte profiel portaal 1-2 in omleiding M54-M53

2.3. MASTBEELD

De OSP's bestaan uit een portaal, waar de geleiders op afdalen, en drie kleinere structuren waarop de isolator stiften worden bevestigd. De portalen worden gefundeerd op palen en verankerd met tuikabels. Zie ref [B] voor de detail tekeningen. Er is voor deze opstelling gekozen met het oog op minimale onderlinge afstanden, hoek, methode van het overbrengen van de geleiders, ondergrondse leidingen, sloten, …

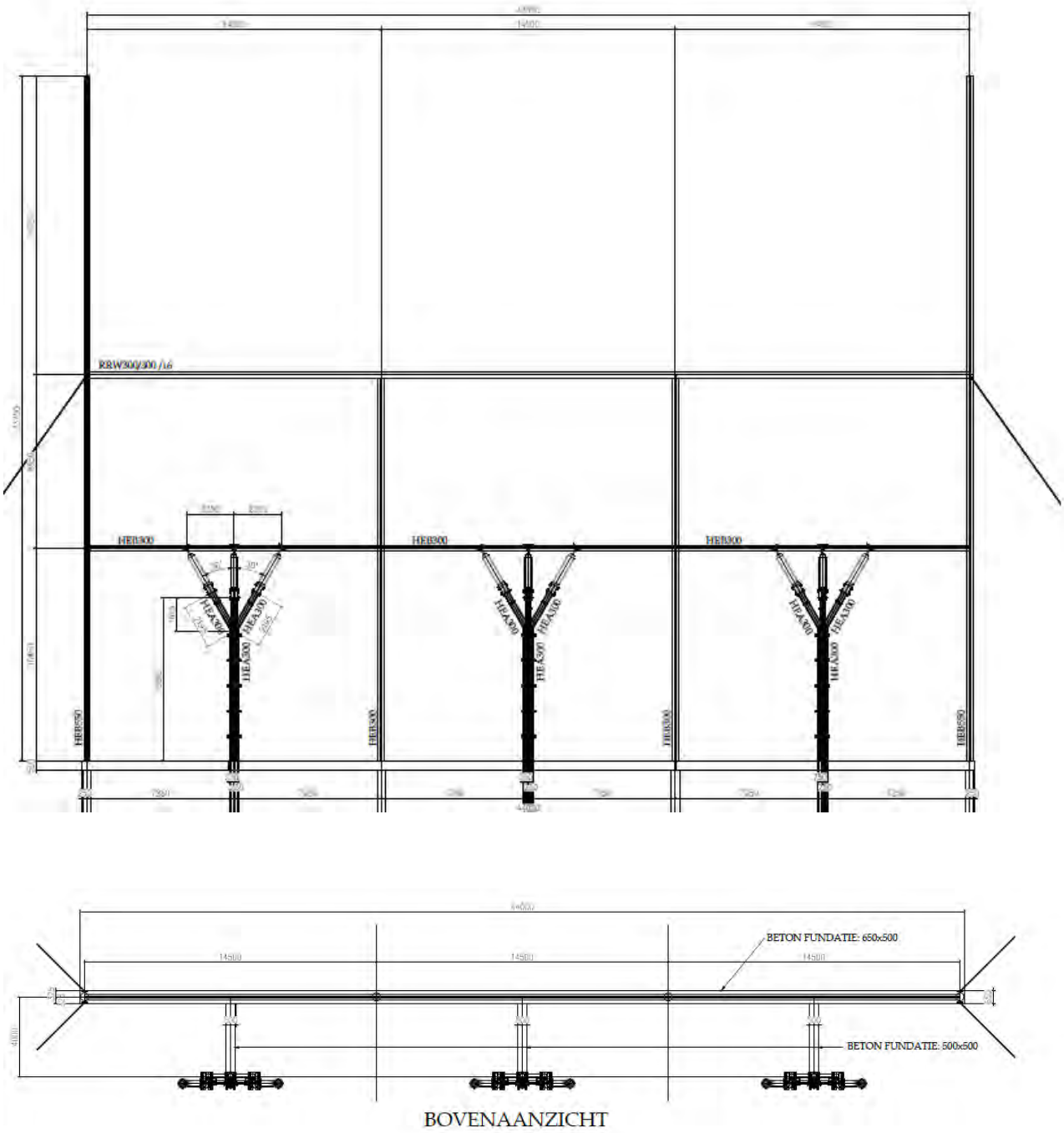

Figuur 3: Mastbeeld portaal

2.4. FUNDERING

Als fundering worden er 7 stalen buispalen van ca. 17m (ϕ 356 mm) in de grond geheid met daarop een betonnen balk van 44 x 0,65 x 0,5m voor de lengte van het portaal met daarbij een verbinding naar de isolator structuren van 4x0,5x0,5m. De verbinding van het portaal naar de betonnen balk gebeurt middels ingestorte ankers. De dimensies van de fundering zullen in de volgende fase worden uitgewerkt en definitief vastgesteld. Zie ref [B] voor een overzicht.

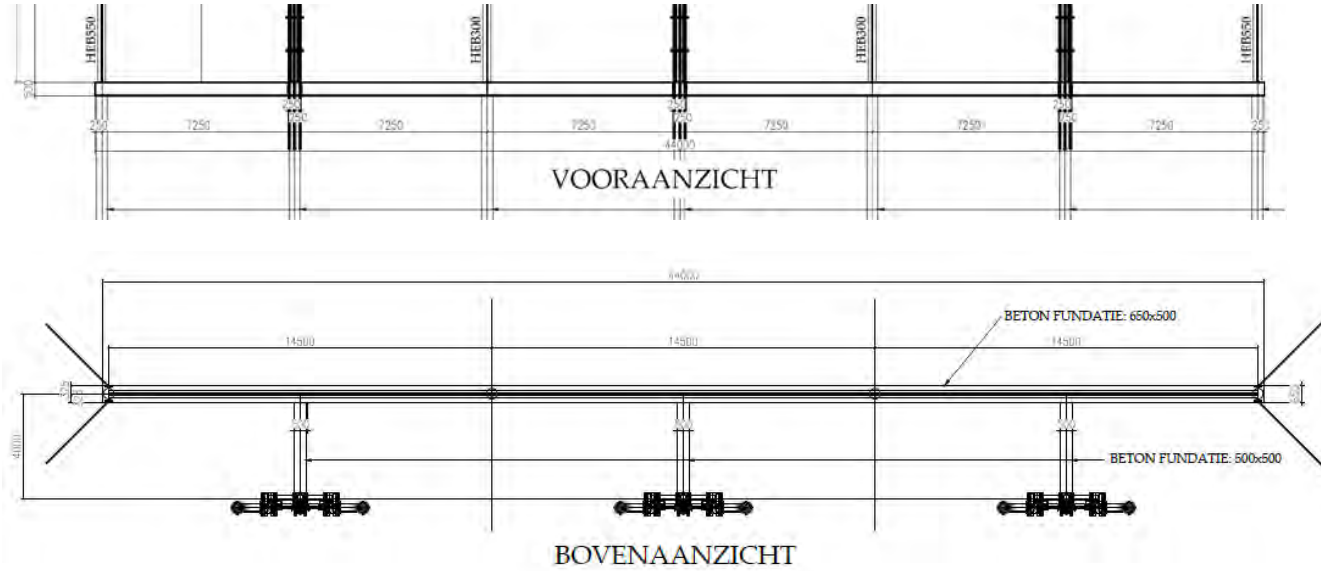

Figuur 4: fundering

2.5. KABEL

TenneT stelt een kabel ter beschikking van het type ‘E-YLKrvasdlwd 87/150KV 1x 1600mm² AL’. De kabel zal per circuit in driehoek worden ingegraven op een diepte van minimaal 0,7m. De circuits zullen met een onderlinge afstand van 2 m worden aangelegd. Het tracé van de ondergrondse kabel loopt gelijk met de hartlijn van de bestaande lijn (zie ref [B]).

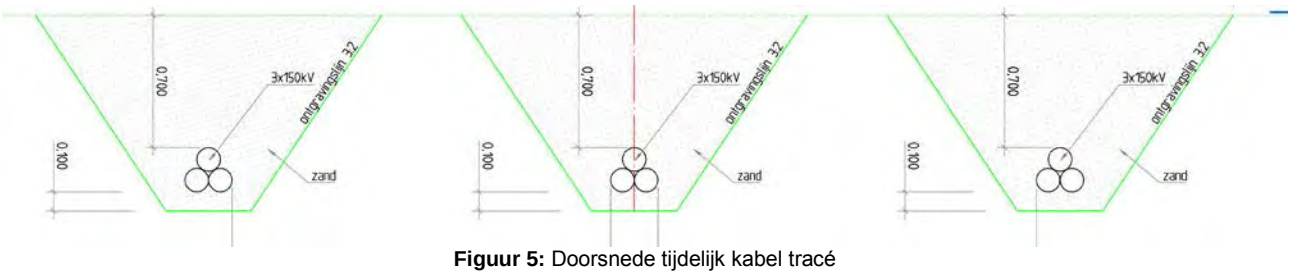

Figuur 5: Doorsnede tijdelijk kabel tracé

2.6. VNB OMBOUWPLAN

De werkmethode is op zo'n manier opgesteld dat er tijdens de werken ten alle tijden 1 circuit in dienst is en 1 in stand-by. Zie bijlage 2 voor de verschillende stappen en een visuele voorstelling. Voor de algemene planning zie ref [C] en [D].

2.7. MAGNEETVELD BEREKENING

Aangezien de omleiding afwijkt van de bestaande lijn zal er een EMC studie worden uitgevoerd. Zie ref [E] voor een quick scan die reeds is uitgevoerd en waaruit we kunnen concluderen dat maximale magnetische fluxdichtheid niet wordt overschreden conform de VROM-richtlijnen.

2.8. VERSTERKINGEN M52 EN M55

Door de kleine hoek en de afdaling naar de OSP's zullen de masten 52 en 55 op verschillende plaatsen in hun structuur versterkt moeten worden. Ook de funderingen zullen moeten aangepast worden. Meer details vindt u in ref [F].

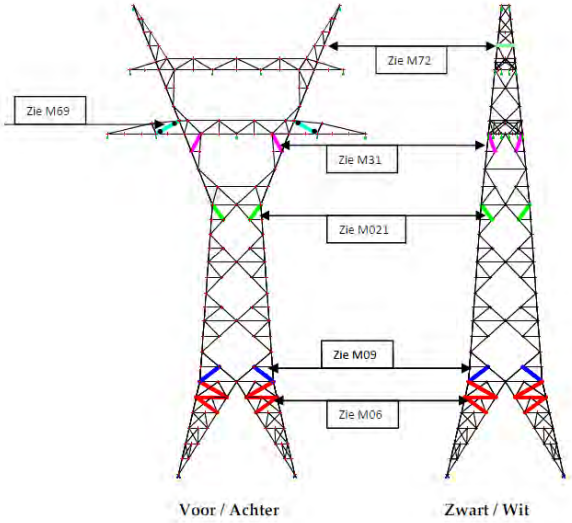

Figuur 6: Versterkingen M55

Ook voor de fundering van masten 52 en 55 zijn er aanvullende maatregelen nodig. Bij de situatie waarbij de palen op trek komen te staan voldoen de huidige funderingen niet. Om de te grote trekspanningen op te vangen worden er extra groutankers geplaatst. Meer details vindt u in ref [F].

3. BIJLAGEN

Bijlage 1 Lengte profiel omleiding M54 en M53

Bijlage 2 VNB ombouwplan

BIJLAGE 1: LENGTE PROFIEL OMLEIDING MAST M54 M53

Bestand:	13039_55-port	Geleidertype :	CU185	Temperatuur :	70 °C	Veld :	1	Lengte :	395 m	Sch. hor. :	1 : 1350
Vak :		Plaats :	fase ondertr	Trekkracht :	21962 N	Doorh. t.o.v. hoogste mast :			27.23 m	Sch. vert.:	1 : 175

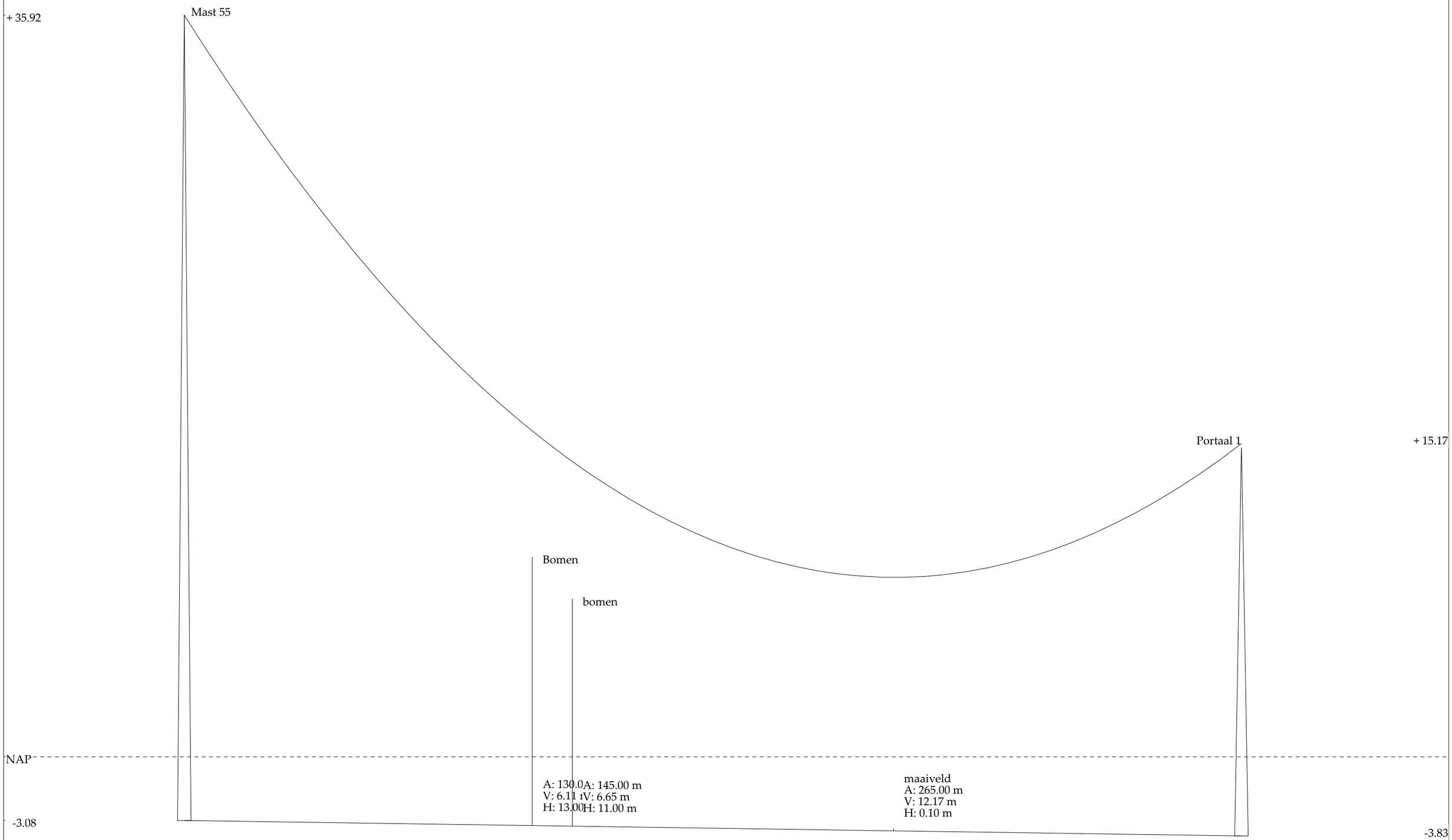

Naam hoogspanningslijn:
Omschrijving vak:

Omschrijving veld:
mast 55 - Port 1

D&C Software Zeegprogrammatuur versie 9.0

Bestand:	port6_mast51nw	Geleidertype :	Cu 185	Temperatuur :	70 °C	Veld :	1	Lengte :	319.25 m	Sch. hor. :	1 : 1100
Vak :		Plaats :	fase onndertr	Trekkracht :	20462 N	Doorh. t.o.v. hoogste mast :			23.04 m	Sch. vert.:	1 : 180

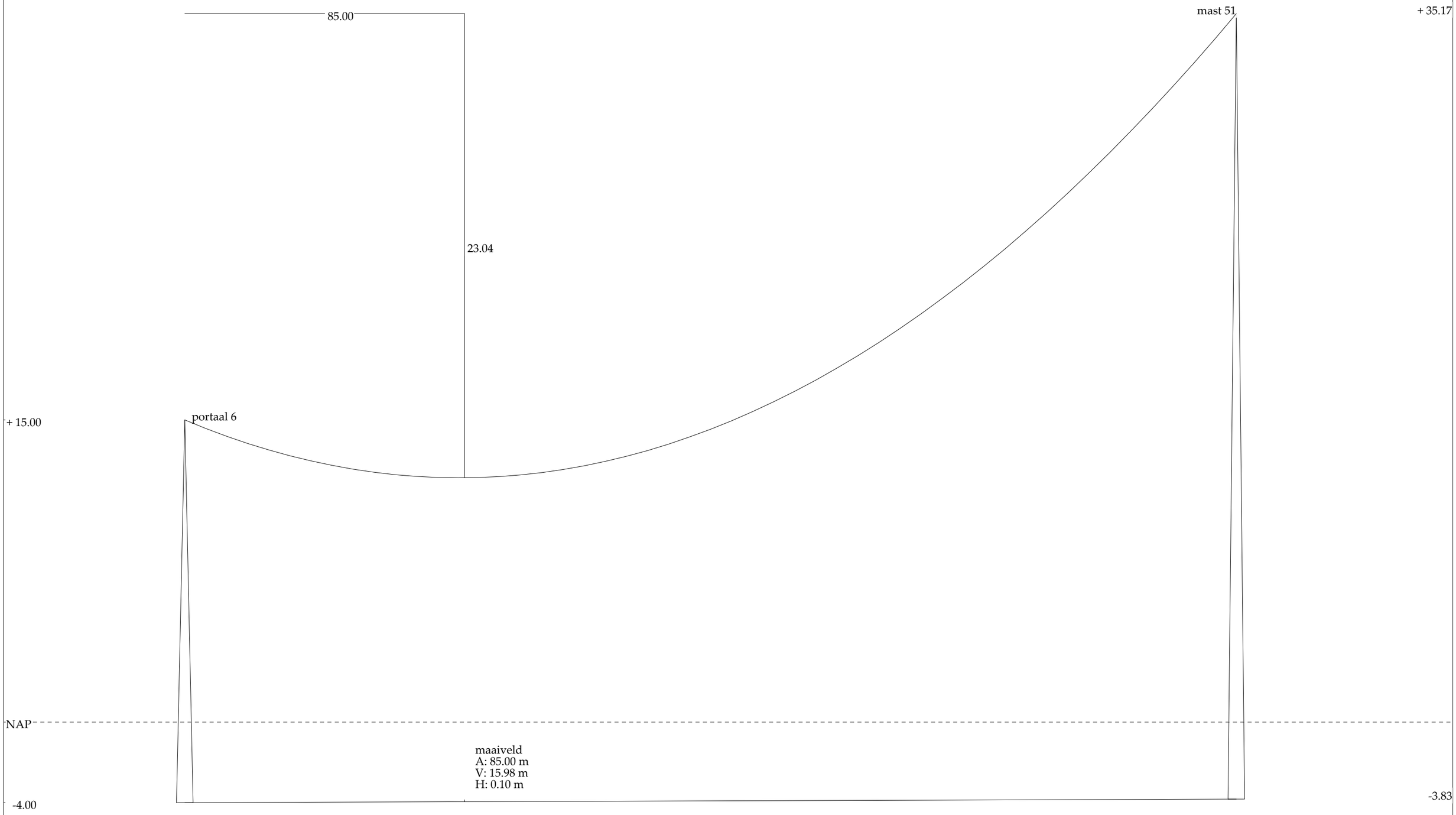

Naam hoogspanningslijn:
Omschrijving vak:

Omschrijving veld:
port1 - mast 51

D&C Software Zeegprogrammatuur versie 9.0

BIJLAGE 2: VNB OMBOUWPLAN

Scenario Omleiding M52-54

Optie Grondkabel

COFELY FABRICOM
GDF SUEZ

Dag	Werk omschrijving	Schema	VNB
1	Versterken van mast lichaam M52 en M55	/	/
2			
3			
4			
5			
6			
7			
8			
9			
10			
11	Versterken 1 kant van mast kop M52 en M55	/	Wit + Grijs
12			
13			
14			
15			
16	Versterken 2e kant van mast kop M52 en M55	/	Grijs + Zwart
17			
18			
19			
20			
21	Montage eerste stuk portalen 1 en 2	Stap 1	Wit + Grijs
22			
23			
24	Montage tweede stuk portalen 1 en 2	Stap 2	Grijs + Zwart
25			
26			
27	OSP's voorbereiden voor het installeren van de kabel		/
28			
29			
30	Trekken van kabels en bliksemdraden tussen portaal 1 en 5	Stap 4	/
31			
32			
33			
34			
35			
36			
37			
38			
39			
40	Afwerken verankering portalen 1, 2, 4 en 5		/
41			
42			
43			
44			
45			
46	Afwerken ophanging portaal 3		/
47			
48			
49	Plaatsen van afstand houders tussen portaal 1 en 5		/
50			
51			
52	Afstand houders circuit wit uit portaal M52-53 en M54-55 fietsen	Stap 5	Wit + Grijs
53	M52 (circuit wit) ombouwen van een ophanging naar een verankering (eventueel optuien) + op/af tuien aangrensende masten + Aardkabel naar beneden brengen		Wit + Grijs
54			
55			
56	Kabels van circuit wit naar beneden brengen en verankeren aan portaal 1 en 5 (fase per fase)	Stap 6	Wit + Grijs
57			
58			
59	Terug plaatsen afstand houders in circuit wit (M52 - portaal 1 en portaal 5 - M55)	Stap 7	Wit + Grijs
60	Controle TenneT voor indienstname circuit Wit		
61	Afstand houders circuit grijs uit portaal M52-53 en M54-55 fietsen	Stap 8	Grijs + Zwart
62	M52 (circuit grijs) ombouwen van een ophanging naar een verankering (eventueel optuien) + op/af tuien aangrensende masten		Grijs + Zwart
63			
64			

Scenario Omleiding M52-54

Optie Grondkabel

Dag	Werk omschrijving	Schema	VNB
65	Kabels van circuit Grijs naar beneden brengen en verankeren aan portaal 1 en 5 (fase per fase)	Stap 9	Grijs + Zwart
66			
67			
68	Terug plaatsen afstand houders in circuit Grijs (M52 - portaal 1 en portaal 5 - M55)	Stap 10	Grijs + Zwart
69	Afstand houders circuit Zwart uit portaal M52-53 en M54-55 fietsen	Stap 11	Grijs + Zwart
70	M52 (circuit zwart) ombouwen van een ophanging naar een verankering (eventueel optuien) + op/af tuien aangrensende masten + Aardkabel naar beneden brengen		Grijs + Zwart
71			
72			
73	Kabels van circuit zwart naar beneden brengen en verankeren aan portaal 1 en 5 (fase per fase)	Stap 12	Grijs + Zwart
74			
75			
76	Terug plaatsen afstand houders in circuit Zwart (M52 - portaal 1 en portaal 5 - M55)	Stap 13	Grijs + Zwart
77	Controle TenneT voor indienstname circuit Grijs + Zwart		Grijs + Zwart

Scenario Omleiding M53-54

Optie: Grondkabel

Stap 1: Montage eerste stuk OSP's

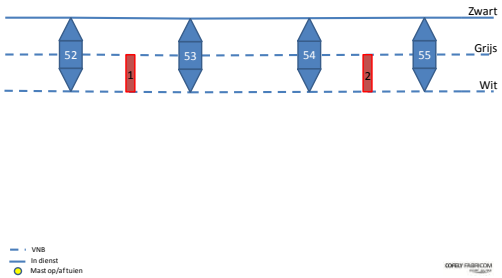

Stap 2: Montage tweede stuk OSP's

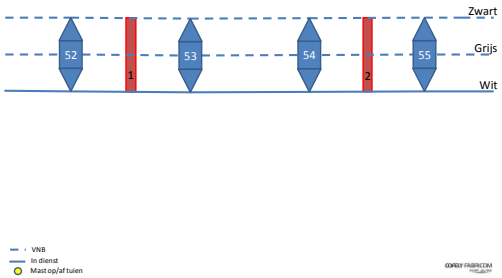

Stap 3: Trekken van grondkabel

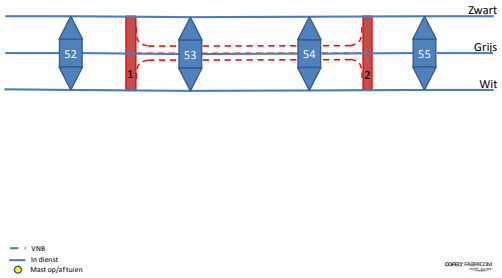

Stap 4: Voorbereiden circuit wit + eventuele aanpassingen M52

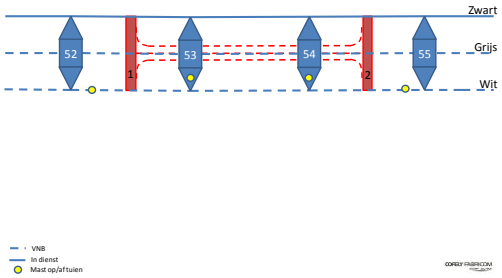

Stap 5: Overbrengen circuit wit

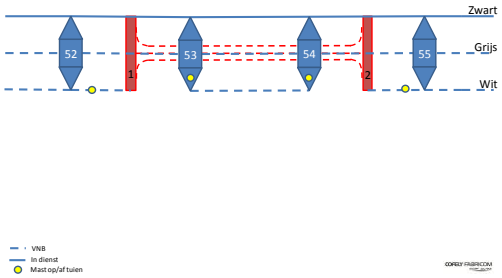

Stap 6: Afwerken circuit wit + controle Tennet

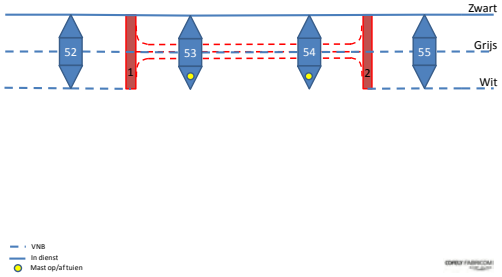

Stap 7: Voorbereiden circuit grijs, + eventuele aanpassingen M52

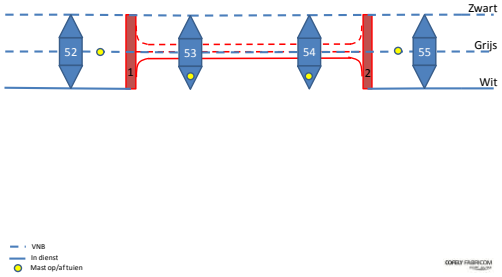

Stap 8: Overbrengen circuit grijs

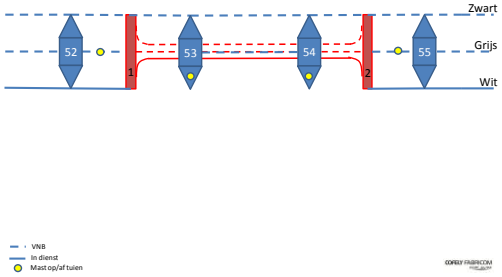

Stap 9: Afwerken circuit grijs + controle Tennet

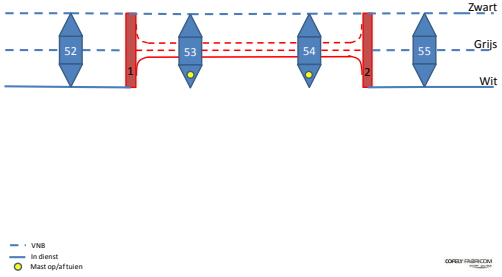

Stap 10: Voorbereiden circuit zwart, + eventuele aanpassingen M52

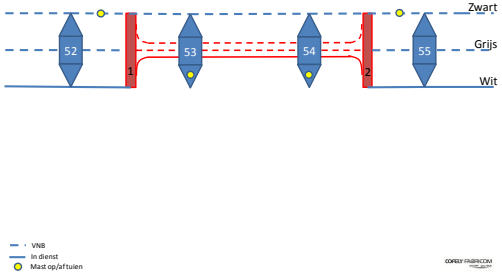

Stap 11: Overbrengen circuit zwart

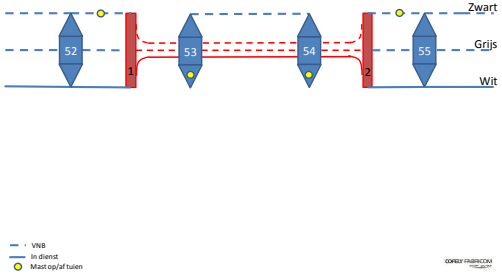

Stap 12: Afwerken circuit zwart + controle Tennet

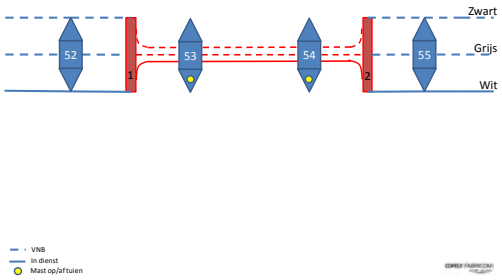

Stap 13: Omleiding in dienst + amoveren M53 en M54

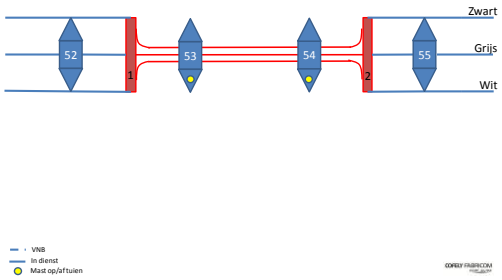

Controle berekeningen M52 en M55

Project:
Randstad 380 kV Noordring

Opdrachtgever:
TenneT TSO

Revisie	Datum	Wijzigingen ten opzichte van vorige revisie
00	04-04-2014	Eerste versie

Documentnummer: R3N-OWR-0054

Opsteller	*Controleur*	*Vrijgever*
Koen Pieters Project Leider	Pieter de Jager Ontwerp Manager	Erik Duwel Project Manager

Distributie

Naam	Bedrijf
Extern	
Guido Volman	TenneT TSO
Intern	
Erik Duwel	BAM
Pieter de Jager	BAM
Eric van Rooijen	BAM
Rob Bakker	BAM
Erwin ten Cate	BAM
Michaël Desmet	Cofely Fabricom
Koen Pieters	Cofely Fabricom
Hein Pijnappel	Mott McDonald

Beheer

De documentbeheerder van de combinatie verzorgt de distributie. Alleen houders van een geregistreerde kopie ontvangen automatisch aanvullingen en/of wijzigingen. Het is de verantwoordelijkheid van de houders het document up to date te houden. De laatste versie is altijd beschikbaar in ThinkProject!

Indien documenten worden geprint, geldt het volgende: een geregistreerde kopie is geldig vanaf de datum van uitgifte. Bij uitgifte van een document met een hoger revisienummer verliest de voorgaande versie automatisch haar geldigheid. Kopiehouders dienen het voorblad van een ongeldige versie te markeren met een diagonale lijn samen met de tekst 'vervallen'.

Neem bij twijfel over de geldende versie contact op met de documentbeheerder.

Inhoudsopgave

1. Inleiding 4
2. Controle berekening mast 52 4
3. Controle berekening mast 55 5
4. Controle berekening Funderingen 6

1. INLEIDING

De komende jaren werken het ministerie van Economische Zaken en TenneT aan de aanleg van een nieuwe 380 kV hoogspanningsverbinding in de Randstad. De nieuwe verbinding stelt de voorziening van elektriciteit in de Randstad veilig.

Het ontwerptracé van de nieuwe Randstad 380 kV verbinding is sinds eind 2008 bekend. De plannen gaan uit van twee ringen, tussen Wateringen en Zoetermeer (de Zuidring) en tussen Zoetermeer en Beverwijk (de Noordring). Eind 2012 heeft Tennet de aanbesteding opgestart voor het gedeelte van de Noordring tussen station Vijfhuizen en Bleiswijk. Het contract is opgedeeld in twee percelen, waarbij de grens ligt bij Zuidelijke Ringvaart. Dit document heeft betrekking op perceel 2 (het zuidelijke gedeelte).

Het voorliggende document is onderdeel van het definitief ontwerp ten behoeve van de vergunningsaanvragen en behandelt:

- De controle berekeningen van M52 en M55 ten behoeven van de omleiding rond M54 en M53

.

2. CONTROLE BEREKENING MAST 52

Postbus 1
2950 AA Alblasserdam
Nieuwland Parc 301 302
2952 DD Alblasserdam
T +31 (0) 78 691 9222
E info@dcengineering.nl
W www.dcengineering.nl

D&C ENGINEERING
design and construct

Omleiding mast 52 tot 54 en noodmast 74, 150 kv-Lijn Leiden-Zoetermeer

Onderwerp	:	Controleberekening mast 52, 150 kV-lijn Zoetermeer -Leiden
Opdrachtgever	:	Cofely Fabricom Koen Pieters
Referentienr	:	1303914509
Opgesteld	:	M. Glegola
Gecontroleerd	:	J.Hollaar
Goedgekeurd	:	J.Hollaar
Revisie	:	0
Datum	:	18-Feb-2014
D&C documentnr.	:	B.14008

SGS
QualityMasters
ISO 9001: 2008
GECERTIFICEERD

2012 © All rights reserved. Disclosure to third parties and copying of this document or any part thereof, or the use of any information contained therein for the purpose other than provided for by this document, is not permitted, except with the prior and express written consent of D&C ENGINEERING, Alblasserdam, The Netherlands.

H:\Projecten\13.039 Fabricom vervangen mast 74 150 kV-lijn Leiden-Zoetermeer\1303914509, noodmast P74 etc\02 - Documenten\Mast 52\B14008_rev0

Rev.	Datum	Omschrijving	Opgesteld	Gecontr.	Goedgek.
0	18-Feb-14	Ontwerpberekening	M.Glegola	J.Hollaar	J.Hollaar
A					

Inhoudsopgave

1	Algemeen
1.1	Inleiding
1.2	Normen en tekeningen en documenten en andere uitgangspunten
1.3	Nadere bepalingen
1.4	Materialen
1.5	Overzicht mast
1.5.1	Overzicht voorvlak mastlichaam
1.5.2	Overzicht zijvlak mastlichaam
2	Ontwerpgegevens mast
2.1	Ontwerpcode
2.2	Ontwerpgegevens
2.3	Geleidergegevens
2.4	Gegevens isolatoren
2.5	Mastbelastingen uit geleiders
3.0	Berekening mast
3.1	Uitgangspunten berekening
3.2	Berekening met behulp van computerprogramma
4.0	Fundatie
4.1	Algemeen
4.2	Fundatie belastingen
4.3	Berekening Fundatie
5.0	Resultaten
5.1	Overzicht spanningniveau's
5.2	Overzicht verzwaring
Bijlage A	Geleiderbelastingen
Bijlage B	Berekening Mast 52; Scia Engineer
Bijlage C	Controle staven mastlichaam

1 Algemeen

1.1 Inleiding

Door Cofely Fabricom is aan D&C engineering te Alblasserdam opdracht verstrekt voor o.a. het uitvoeren van een controleberekening voor mast nr.52 in de 150 kV-lijn Zoetermeer -Leiden. Mast 52 moet gecontroleerd worden, omdat rond de nieuwe 380kv-lijn een omleiding nodig is. Voor mast 53 komt een portaal waardoor de belasting op mast 52 wijzigd.
De berekeningen worden uitgevoerd conform de vigerende norm NEN-EN-50341-1 en 3.
Voor de geleiderbelasting vanuit de bliksemdraden wordt ijsgebied A aangehouden, conform afspraak (aanvullende eis van TenneT), zoals vermeld in: "Lijnen; Standaard programma van eisen; PVE.05.000;25 november 2010; versie 1.0".

1.2 Normen en tekeningen en documenten en andere uitgangspunten

Tekeningen :

Mast nr.52 in de 150 kV-lijn Zoetermeer -Leiden.	
tek.nr.	omschrijving
5703-21-E	Ondergedeelte mastlichaam masttype D-D
5703-20-D	Tussengedeelte mastlichaam masttype D-D
5703-19-E	Bovengedeelte mastlichaam masttype D-D
5703-17-C	Ondertraverse masttype D-D
5703-16-D	Ondertraverse masttype D-D
5703-14-A	Boventraverse masttype D-D
5703-13-G	Boventraverse masttype D-D

Normen:

NEN-EN 50341-1 : 2001
NEN-EN 50341-3 : 2001

Andere uitgangspunten:

Fundatiehoogte 0,50 m boven maaiveld.

1.3 Nadere bepalingen

De geleiderbelastingen en de benodigde verzwaringen van de mastconstructies worden berekend volgens NEN-EN 50341-1 en 3 met spanningscontroles volgens EC-3.

De mastconstructie wordt 3D doorgerekend.

De gestelde slankheidsrestricties in NEN-EN 50341-1 en 3 worden geacht niet van toepassing te zijn, omdat in sommige gevallen in het verleden grotere slankheden zijn toegestaan.

Voor de mastconstructie zal een maximum totaalspanning van 100% worden gehanteerd.

Er is gerekend dat er geen antenne-opstellingen in de te controleren mastconstructie aanwezig zijn.

De berekening is uitgevoerd met het rekenpakket Scia LTA programma 2013

Voor de geleiderbelasting vanuit de bliksemdraden wordt gerekend met ijsgebied A. Zie richtlijn van Tennet: "Lijnen; standaard programma van eisen; PVE.05.000; 25 november 2010; versie 1.0; artikel 5.3".

1.4 Materialen

Materiaal randen	:	Fe360
Materiaal diagonalen	:	Fe360
Materiaal bouten	:	4.6 (8.8 nieuw)

1.5 Overzicht mast

1.5.1 Overzicht voorvlak mastlichaam

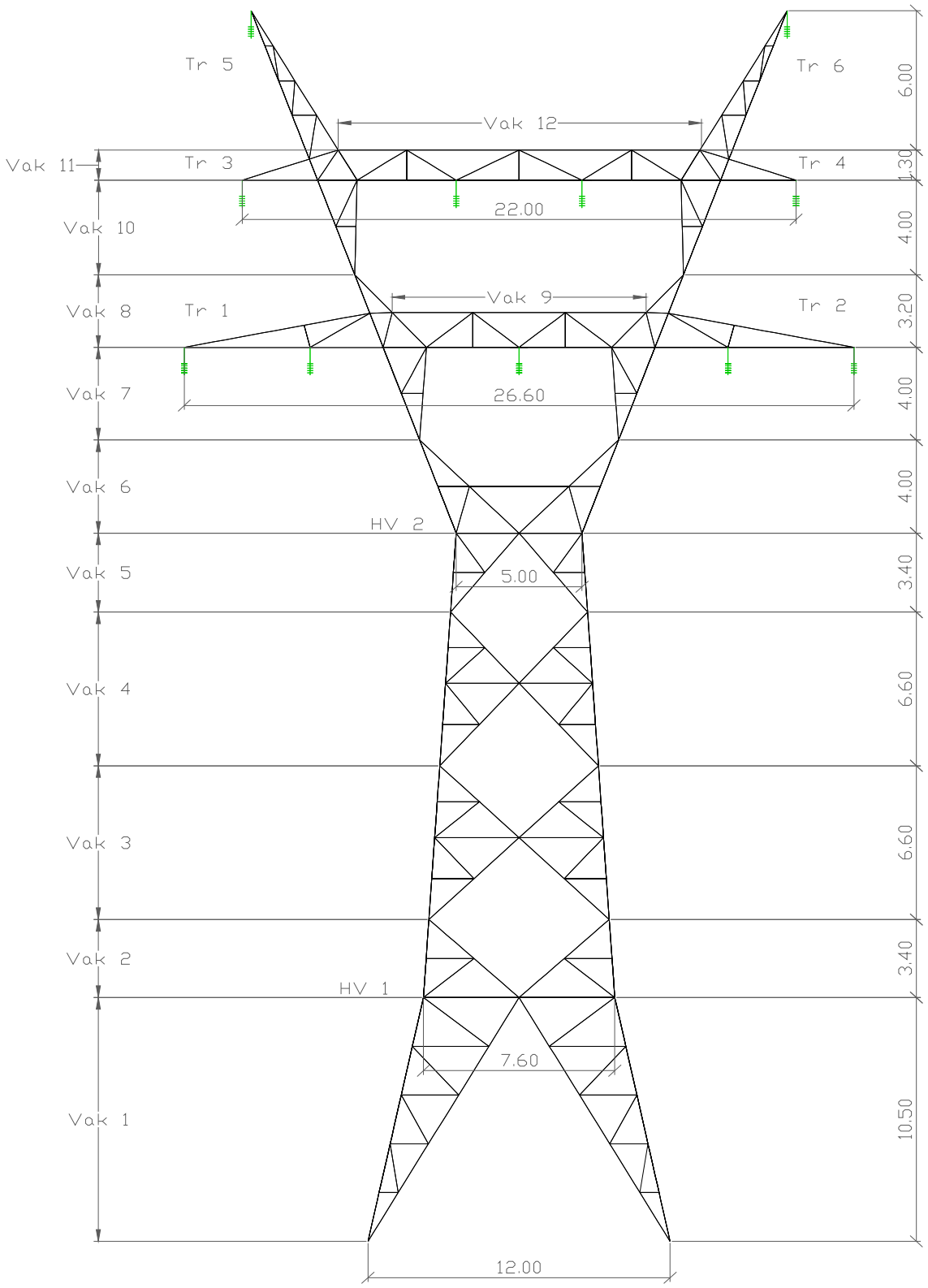

1.5.2 Overzicht zijvlak mastlichaam

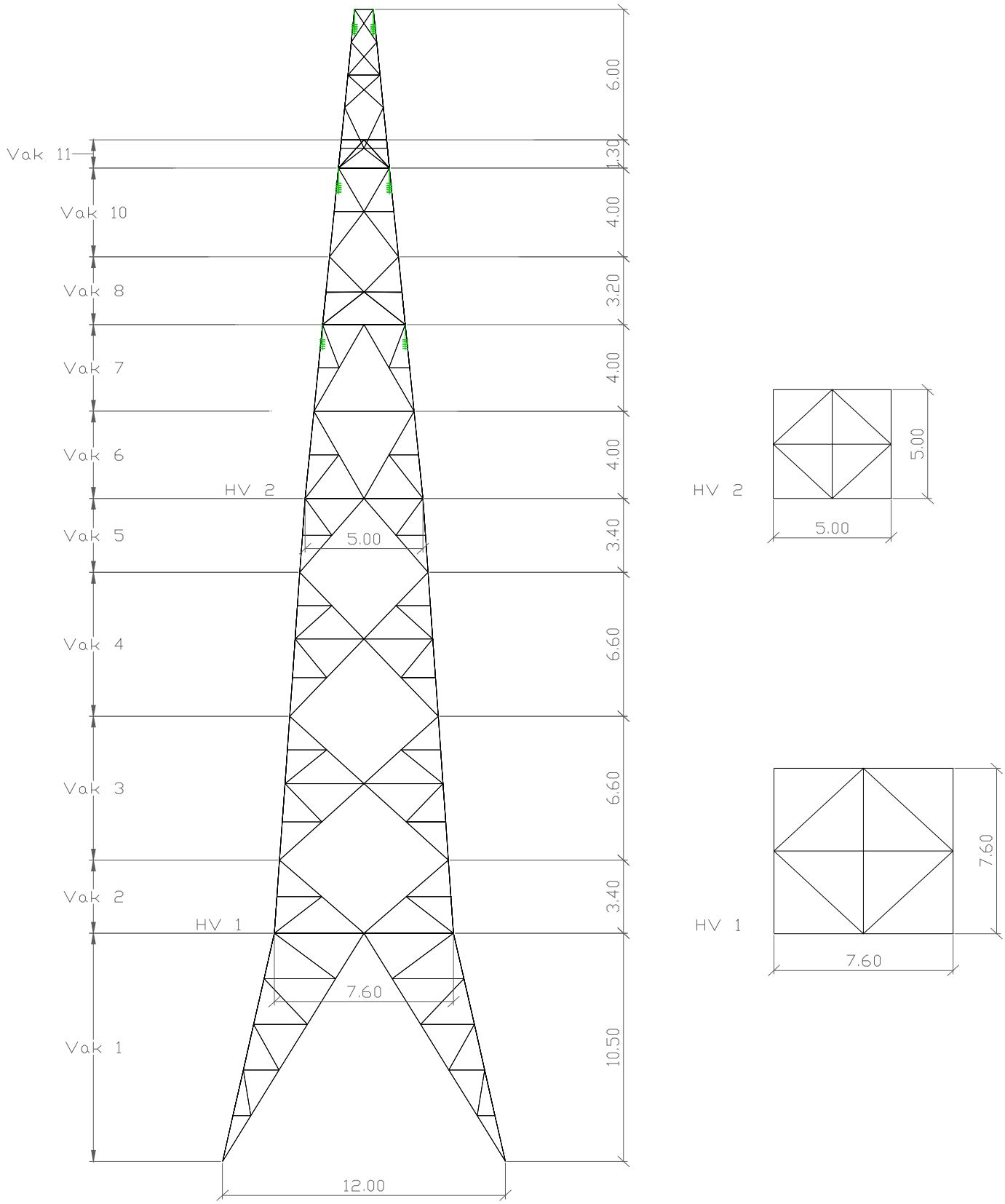

2 Ontwerpgegevens mast

2.1 Ontwerpcode

De berekening is gebaseerd op NEN-en 50341-1 en -3-15
Bovengrondse hoogspanningslijnen.

2.2 Ontwerpgegevens

Lijnhoek	-	0°	
Windgebied	-	II	
Bebouwing	-	onbebouwd	
IJsgebied bliksemdraden	-	**A**	
IJsgebied fasedraden	-	B	
Toeslag eigengewicht	-	20%	
Totale hoogte van de mast	-	53,0 m	*)
Hoogte traverse 1	-	38,5 m	*)
Hoogte traverse 2	-	45,7 m	*)

Hoogte voet boven maaiveld	-	0,5 m	
Veldlengten	-	431,5/247,6 m	
Bliksemdraden	-	Br 50	(2x)
Factor β bliksemdraad	-	1,0	
Fasedraden	-	CU 185	(9 x 2-bundel)
Factor β fasedraad	-	0,8	
Boutklasse	-	8.8	
Materiaal mastranden	-	S235	
Materiaal overige mast	-	S235	
	-		

*) t.o.v. bovenzijde fundatiepoer

2.3 Geleidergegevens

		Br 50	CU 185
		Bliksemdraad	fasedraad
Eigen gewicht	N/m	4,43	16,62
Doorsnede	mm2	48,36	181,6
Diameter	mm	9	17,5
Elasticiteitsmod.	N/mm2	130000	130000
Lin. Uitzettingsc.	1/°C	0,000017	0,000017
Breeksterkte	N	28390,7	72760,5

2.4 Gegevens isolatoren

Dubbele afspanning

lengte isolatorketting	2	m	
totale gewicht afspanning per zijde	2,5	kN	
diameter isolator schaal	255	mm	(voor wind 2/3*255mm =170mm)

2.5 Mastbelastingen uit geleiders

Voor belastingen uit de geleiders wordt verwezen naar bijlage A van dit rapport.

3 Berekening mast

3.1 Uitgangspunten berekening

Ontwerp-norm	NEN-EN 50341-3
Boutkwaliteit	4,6
Staalkwaliteit	S235
Toeslag eigengewicht	20%
Referentie periode	50 jaar

Voor verdere gegevens wordt verwezen naar hoofstuk 2.0

3.2 Berekening met behulp van computerprogramma

SCIA - ESA-Engineer - LTA

Voor de berekening van de mastconstructie wordt verwezen naar bijlage B van dit rapport.

4 Fundatie

4.1 Algemeen

Voor fundatiebelastingen zie Bijlage B:(maximale belastingen per knoop en Resultante op fundatie).
Deze belastingen zijn opgesteld en weergegeven conform NEN-EN 50341-1 en 3 november 2001; Bovengrondse hoogspanningslijnen.

Per fundatie-belastingweergave is dit opgegeven inclusief combinatie- en belastingfactoren.

Aan de hand van de bovengenoemde belastinggegevens en de sonderinggegevens kan de fundatie berekend worden.

4.2 Fundatie belastingen

Reacties

Lineaire berekening, Extreem : Globaal
Selectie : Alle
Klasse : All UGT

Steunpunt	BG	Rx [kN]	Ry [kN]	Rz [kN]	Mx [kNm]	My [kNm]	Mz [kNm]
Sn2/N3	1a/32	**-163,22**	168,84	**823,26**	0,00	0,00	0,00
Sn1/N1	1a/29	**162,34**	**169,61**	822,87	0,00	0,00	0,00
Sn3/N7	1a/34	-153,53	**-162,62**	778,67	0,00	0,00	0,00
Sn3/N7	1a-p/35	118,87	124,20	**-605,70**	0,00	0,00	0,00
Sn1/N1	1a/154	29,16	28,67	143,91	**0,00**	**0,00**	**0,00**

Resultante

Lineaire berekening, Extreem : Globaal
Selectie : Alle
Klasse : All UGT

BG	Rx [kN]	Ry [kN]	Rz [kN]	Mx [kNm]	My [kNm]	Mz [kNm]
1a/7	351,35	13,34	496,66	-548,34	11545,30	27,15
1a/5	-358,43	13,34	496,66	-548,34	-11835,74	-27,15
1a/38	0,00	303,71	496,66	-9498,83	0,02	-2,97
1a/16	0,00	-282,82	496,66	8639,76	0,02	-8,84
3/37	-116,94	-45,36	600,55	955,91	-4155,55	-4,56
1a-p/28	-286,86	-217,81	372,50	6390,18	-9318,14	7,15
1a-p/39	0,00	-282,82	372,50	8640,37	0,02	-8,84
5a13/8	0,00	-40,94	414,88	1775,05	13,31	379,97
5a21/109	0,00	-40,94	414,88	1774,25	10,66	-379,96

Centraalpunt:

X [m]	Y [m]	Z [m]
0,000	0,000	0,000

Resultante op Fundering

Lineaire berekening, Extreem : Globaal
Selectie : Alle
Klasse : All UGT

BG	Steunpunt	Extreem	horiz. component [kN]	resultante [kN]	Hoek [deg]	helling(afschot) [-]	Rx [kN]	Ry [kN]	Rz [kN]
1a-p/28	Sn1/N1	Rx	**160,84**	583,95	2,09	-3,49	-109,51	-117,80	-561,37
1a/29	Sn1/N1	Rx	**234,78**	855,71	-178,75	3,50	162,34	169,61	822,87
1a/32	Sn2/N3	Rx	195,78	**550,71**	-101,48	-2,63	-163,22	-108,11	-514,74
1a/29	Sn1/N1	Rx	234,78	**855,71**	-178,75	3,50	162,34	169,61	822,87
1a/29	Sn1/N1	Rx	234,78	855,71	**-178,75**	3,50	162,34	169,61	822,87
1a/26	Sn2/N3	Ry	196,65	846,42	**104,16**	4,19	100,81	168,84	823,26
1a-p/28	Sn1/N1	Rx	160,84	583,95	2,09	**-3,49**	-109,51	-117,80	-561,37
1a/29	Sn3/N7	Rz	162,94	795,54	1,28	**4,78**	112,62	117,76	778,67
1a/32	Sn2/N3	Rx	195,78	550,71	-101,48	-2,63	**-163,22**	-108,11	-514,74
1a/29	Sn1/N1	Rx	234,78	855,71	-178,75	3,50	**162,34**	169,61	822,87
1a/34	Sn3/N7	Rx	223,65	616,67	-178,35	-2,57	-153,53	**-162,62**	-574,69
1a/29	Sn1/N1	Rx	234,78	855,71	-178,75	3,50	162,34	**169,61**	822,87
1a-p/28	Sn3/N7	Rz	214,67	642,61	-178,32	-2,82	-147,28	-156,18	**-605,70**
1a/26	Sn2/N3	Ry	196,65	846,42	104,16	4,19	100,81	168,84	**823,26**

4.3 Berekening Fundatie

De berekening van de fundatie, met de gegevens zoals de sonderingen, is een op zichzelf staande berekening, welke niet valt onder de scope van deze opdracht.

5 Resultaten

Uit de controleberekening van de mast volgen de volgende resultaten:
(Opmerking: De verschillende berekeningen zijn te vinden in de bijlagen B en C)

5.1 Overzicht spanningniveau's

Plaats		$UC_{tot,1}$	Verzwaring:			$UC_{tot,2}$
Vak 1 - randen	H150/150/14	133%	extra knikverkoters	L50/50/5		97%
			bouten visselen voor	kl 8,8		66%
Vak 1 - diagonalen	H180/90/10	55%				
Vak 1 - 1e en 2e hor knikverkorters	H50/40/5	92%				
Vak 1 - 3e hor. knikverkorters	H50/50/5	119%	uitwisselen voor	H50/50/8	kl8,8	78%
Vak 1 - 4e hor. knikverkorters	H60/60/6	92%				
Vak 1 1e en 2e schuine knikverkorters	H50/40/5	235%	uitwisselen voor	H60/60/8	kl8,8	85%
Vak 1 - 3e schuine knikverkorters	H50/40/5	164%	knikverkorters			61%
Vak 1 4e schuine knikverkorters	H50/50/5	145%	knikverkorters			74%
Vak 2 - randen	H140/140/13	159%	vlindersprofiel	2x 140/140/13	kl8,8	62%
Vak 2 - diagonalen	H100/75/7	95%				
Vak 2 - hor. kikverkorters	H50/40/5	115%	uitwisselen voor	H50/50/6	kl8,8	84%
Vak 2 schuin kikverkorter	H50/40/5	180%	uitwisselen voor	H50/50/8	kl8,8	90%
Vak3 randen	H140/140/13	137%	extra knikverkoters	H50/50/5	kl 8,8	96%
Vak 3 diagonalen	H100/75/7	123%	uitwisselen voor	H100/100/10	kl 8,8	92%
Vak 3 horizontaal	H70/70/6	74%				
Vak 3 hor. knikverkorters	H50/40/5	101%	uitwisselen voor	H50/50/5	kl 8,8	88%
Vak 3 - schuine knikverkorters	H50/40/5	117%	knikverkorters			47%
Vak 4 randen	H130/130/12	111%	extra knikverkoters	H50/50/5	kl 8,8	90%
Vak 4 diagonalen	H100/75/7	75%				
Vak 4 horizontaal	H60/60/5	105%	uitwisselen voor	H60/60/8	kl8,8	68%
Vak 4 hor. knikverkorters	H50/40/5	88%				
Vak 4 schuine knikverkorters	H50/40/5	70%				
Vak 5 randen	H130/130/12	113%	bouten uitwisselen voor		kl8,8	84%
Vak 5 diagonalen	H100/75/7	120%	uitwisselen voor	H100/100/10	kl8,8	89%
Vak 5 hor. knikverkorters	H50/40/5	76%				
Vak 5 schuine knikverkorters	H50/40/5	67%				
Vak 6 randen	H130/130/12	118%	extra knikverkoters	H50/50/5	kl 8,8	75%
Vak 6 diagonalen voor- en achtervlak	H150/150/14	112%	bouten uitwisselen voor		kl 8,8	68%
Vak 6 diagonalen zijvlak	H100/75/7	92%				
Vak 6 horizontaal	H130/130/12	13%				
Vak 6 hor. knikverkorters	H50/40/5	76%				
Vak 6 schuine knikverkorters voorvlak	H100/100/6	19%				
Vak 6 schuine knikverkorters zijvlak	H50/40/5	112%	uitwisselen voor	H50/50/5	kl 8,8	83%
Vak 7 randen	H130/130/12	60%				
Vak 7 diagonalen voor- en achtervlak	H120/80/8	128%	uitwisselen voor	H120/120/10	kl 8,8	80%
Vak 7 diagonalen zijvlak	H120/80/8	69%				
Vak 7 horizontaal zijvlak	H75/75/8	62%				
Vak 7 hor. knikverkorters	H50/40/5	52%				
Vak 7 schuine knikverkorters	H50/40/5	73%				

Plaats			$UC_{tot,1}$	Verzwaring:			$UC_{tot,2}$
Vak 8	randen	H120/80/8	88%				
Vak 8	diagonalen voor en achter vlak	H120/80/8	100%				
Vak 8	diagonalen zijvlak	H70/70/5	103%	uitwisselen voor	H70/70/8	kl 8,8	61%
Vak 8	hor. knikverkorters voorvlak	H130/130/10	75%				
Vak 8	hor. knikverkorters zijvlak	H50/40/5	135%	uitwisselen voor	H50/50/8	kl 8,8	76%
Vak 8	schuine knikverkorters voorvlak	H120/80/8	92%				
Vak 9	bovenrand	H130/130/12	52%				
Vak 9	onderrand	UNP160	68%				
Vak 9	diagonalen voor-en achtervlak	H100/100/8	88%				
Vak 9	diagonalen voor-en achtervlak	H120/120/8	84%				
Vak 9	verticalen		13%				
Vak 9	diagonalen ondervlak		49%				
Vak 10	randen	H100/100/6	99%				
Vak 10	diagonalen voor- en achtervlak	H120/80/8	72%				
Vak 10	diagonalen zijvlak	H80/80/10	95%				
Vak 10	hor. knikverkorters voorvlak	H45/30/5	68%				
Vak 10	hor. knikverkorters zijvlak	H45/45/5	83%				
Vak 10	schuine knikverkorters voorvlak	H50/40/5	22%				
Vak 11	randen	H80/80/6	34%				
Vak 11	diagonalen voor- en achtervlak	H75/75/7	90%				
Vak 11	schuine diagonalen zijvlak	H45/30/5	62%				
Vak 11	horizontaal zijvlak	H65/65/6	68%				
Vak 11	hor. voor en achtervlak	H50/40/5	112%	uitwisselen voor	H50/50/6	kl 8,8	82%
Vak 11	schuine diagonaal v.v en a.v	H80/80/6	107%	uitwisselen voor	H80/80/8	kl 8,8	80%
Vak 11	hor. knikverkorters zijvlak	H45/45/5	65%				
Vak 12	bovenrand	H100/100/8	76%				
Vak 12	onderrand	UNP120	64%				
Vak 12	diagonalen ondervlak	H55/55/5	95%				
Vak 12	diagonalen v.v en a.v	H100/100/6	72%				
Vak 12	diagonalenv.v en a.v	H90/90/6	120%	uitwisselen voor	H90/90/8	kl 8,8	81%
Vak 12	diagonalen v.v en a.v	H50/40/5	120%	uitwisselen voor	H50/50/8	kl 8,8	69%
HV 1	rand	H120/120/11	89%				
HV 1	diagonalen	H80/80/6	92%				
HV 1	kruis	H70/70/5	216%	uitwisselen voor	H80/80/10	kl 8,8	79%
HV 2	randen voor- en achtervlak	H110/110/10	140%	uitwisselen voor	H110/110/12	kl 8,8	85%
HV 2	randen zijvlak	H80/80/6	43%				
HV 2	diagonalen	H100/100/8	28%				
HV 2	kruis	H60/60/5	179%	uitwisselen voor	H60/60/10		95%

Plaats			$UC_{tot,1}$	Verzwaring:			$UC_{tot,2}$
Tr. 1 en 2	bovenrand	H65/50/5	131%	uitwisselen voor	H60/60/8	kl 8,8	80%
Tr. 1 en 2	onderrand	UNP160	83%				
Tr. 1 en 2	diagonalen v.v en a.v	H50/40/5	82%				
Tr. 1 en 2	diagonalen ondervlak	H75/75/6	71%				
Tr. 1 en 2	diagonalen ondervlak	H55/55/5	86%				
Tr. 3 en 4	bovenrand	H50/40/5	112%	uitwisselen voor	H50/50/6	kl 8,8	82%
Tr. 3 en 4	onderrand	UNP120	30%				
Tr. 3 en 4	diagonalen ondervlak	H50/50/5	50%				
Tr. 5 en 6	bovenrand	H65/50/6	89%				
Tr. 5 en 6	onderrand	H80/80/6	65%				
Tr. 5 en 6	diagonalen ondervlak	H45/45/5	67%				
Tr. 5 en 6	diagonalen ondervlak	H45/30/5	61%				
Tr. 5 en 6	diagonalen v.v en a.v.	H45/30/5	36%				

5.2 Overzicht verzwaring

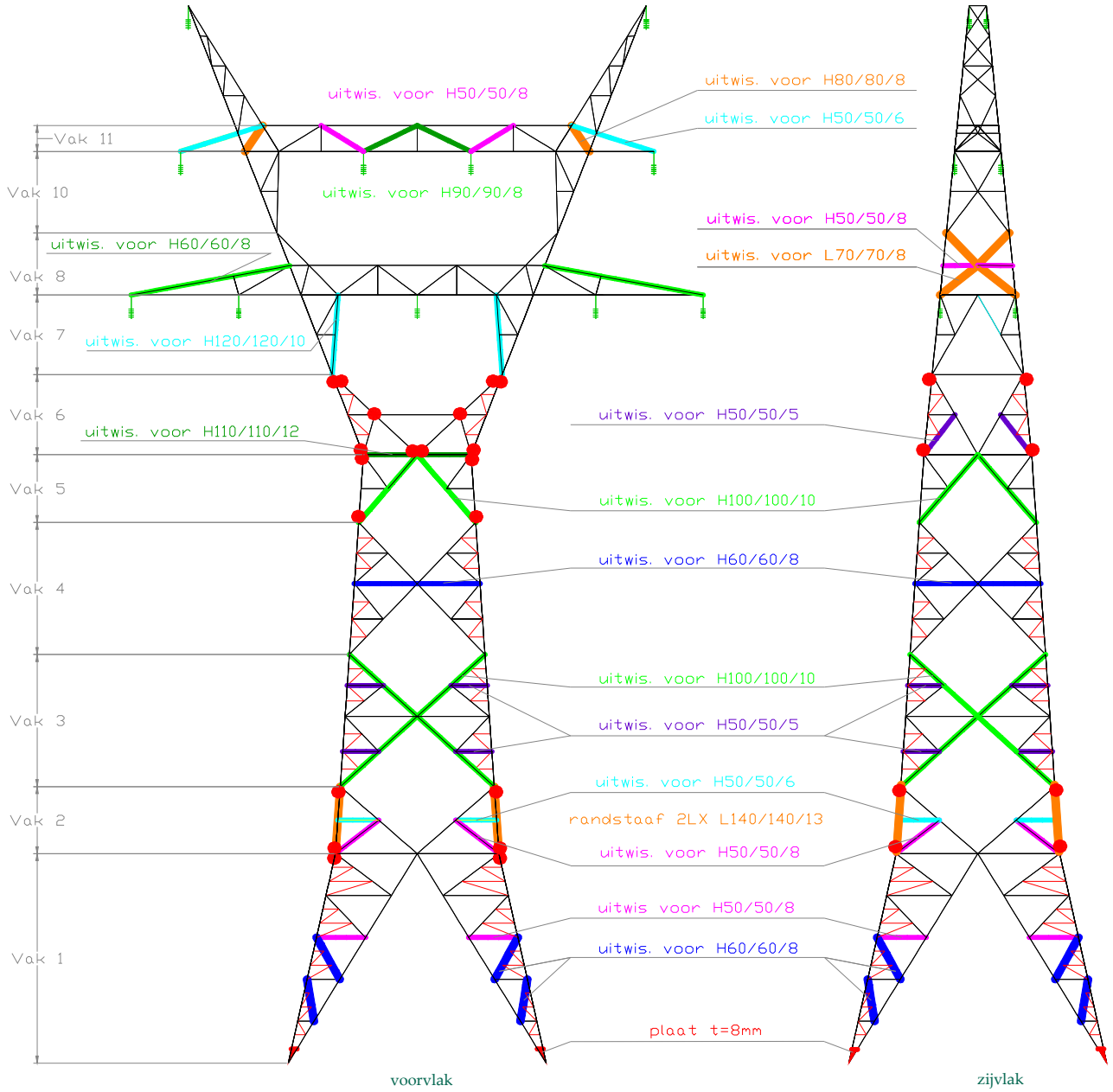

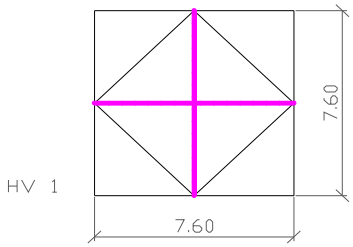

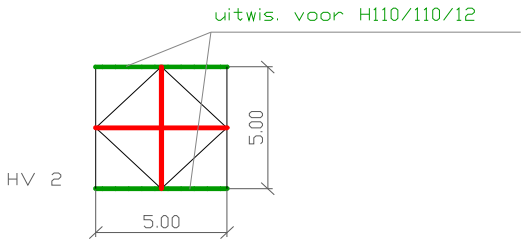

Verzwaring :

Extra knikveroters	L50/50/5	bij randstaven	**Vaknr. 1; 3; 4 en 6**	voor- en achtervlak
Bouten wisselen voor	kl 8.8	bij randstaven	**Vaknr. 1; 2; 5 en 6**	voor- en achtervlak
		bij diagonalen	**Vaknr. 6**	voorvlak
Bouten	kl 8.8	bij alle nieuwe staven		

Bijlage A Geleiderbelastingen

Dossier/File

Order

Pagina/Page

D&C ENGINEERING
design and construct

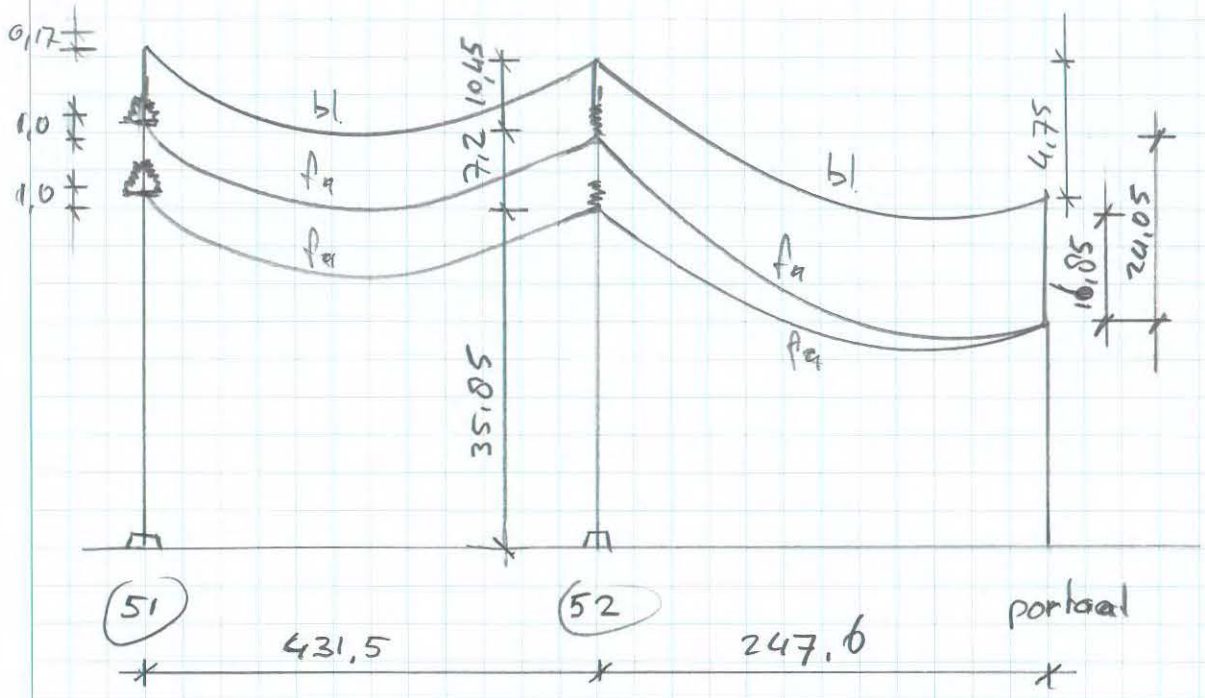

2 bundel CU185

fa_{bo} = eds = 24 %

$fa_{and.}$: eds = 24 %

bliksemdraad

BT 50 eds = 36,6

Revisie/Revision	0	A	B	C	D	E	F
Datum/Date							
Naam/Name							
Gecontroleerd/Checked							
Goedgekeurd/Approved							

KARAKTERISTIEKE GEGEVENS :

Naam hoogspanningslijn	:	150 kV Zoetermeer - Leiden
Masttype	:	steunmast
Mastnaam	:	mast 52
Mastnummer	:	52
Windgebied	:	II
Bebouwing	:	Onbebouwd
IJsgebied	:	A
Referentie periode	:	50 jaar

		VELD 1	VELD 2
Minimum lijnhoek	[graden]	180	180
Maximum lijnhoek	[graden]	180	175.3
Veldlengte	[m]	432	248
Vaklengte	[m]	680	

* Belastingcombinaties en -factoren: NEN-EN 50341 -1 t/m -3, nov. 2001

* Berekend worden de "Ultimate Limit State" belastingcombinaties, (table 4.2.11/NL.1)

(1a) Permanente belasting met extreme windbelasting
(1b) Permanente belasting met extreme koude
(3) Permanente belasting met extreme ijsbelasting
(4) Permanente belasting met onderhoudsbelasting
(5a) Permanente belasting met torsie
(6) Permanente belasting

* Alle belastingscomponenten zijn exclusief belastingsfactoren, uitgezonderd draadtrekkrachten jTrep

* Assenstelsel:

y = lijnrichting

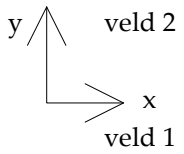

INVOERGEGEVENS VOOR DRAAD No.: 1

Geleidersoort	:	bliksemdraad
Geleidersoort + plaats	:	bliksemdr
Geleiders veld 1 en 2	:	Br 50
Eigen gewicht draad	[N/m] :	4.43
Draaddoorsnede	[mm²] :	48.36
Draaddiameter	[mm] :	9
Elasticiteitsmodulus	[N/mm²] :	130000
Uitzettingscoëfficiënt	[1/°C] :	0.000017
Breekbelasting draad	[N] :	28390.7
Maximum percentage breekbelasting	[%] :	100
EDS percentage breekbelasting	[%] :	36.6
Hoogte draadbevestiging	[m] :	53.5

Eigen gewicht isolator	[kN] :	0	0
Lengte isolator	[m] :	0	0
Diameter isolatorschaal	[mm] :	0	0
Hoogte isolator boven maaiveld	[m] :	0	0
Hoogte verschil draadbevestiging (aangrenzende minus beschouwende mast) (hoger = positief)	[m] :	.17	-4.75

Mastnummer : 52
Draadnummer : 1
Geleidersoort + plaats : bliksemdr
Geleiders veld 1 en 2 : Br 50
Veldlengte voor gewicht [m] : 384.26

BELASTING COMPONENTEN [kN]		GELEIDER		ISOLATOR	
		VELD 1	VELD 2	VELD 1	VELD 2
Grep		- 0.96	- 0.75	0.00	0.00
Qijs;rep		- 3.24	- 2.54	0.00	0.00
Qonderhoud;rep		0.00	0.00		
BIJ MINIMUM LIJNHOEKEN-					
Qw;rep loodrecht lijn,	x	1.73	1.01	0.00	0.00
Qw;rep loodrecht lijn,	y	-0.00	0.00	0.00	0.00
Qw;rep in lijnrichting,	x	0.00	0.00	0.00	0.00
Qw;rep in lijnrichting,	y	-0.00	0.00	0.00	0.00
Qw;rep 45 graden (+y, +x),	x	0.87	0.51	0.00	0.00
Qw;rep 45 graden (+y, +x),	y	-0.00	0.00	0.00	0.00
Qw;rep 45 graden (-y, +x),	x	0.87	0.51	0.00	0.00
Qw;rep 45 graden (-y, +x),	y	-0.00	0.00	0.00	0.00
BIJ MAXIMUM LIJNHOEKEN-					
Qw;rep loodrecht lijn,	x	1.73	1.01	0.00	0.00
Qw;rep loodrecht lijn,	y	-0.00	-0.04	0.00	0.00
Qw;rep in lijnrichting,	x	0.00	-0.00	0.00	0.00
Qw;rep in lijnrichting,	y	-0.00	0.00	0.00	0.00
Qw;rep 45 graden (+y, +x),	x	0.87	0.47	0.00	0.00
Qw;rep 45 graden (+y, +x),	y	-0.00	-0.02	0.00	0.00
Qw;rep 45 graden (-y, +x),	x	0.87	0.55	0.00	0.00
Qw;rep 45 graden (-y, +x),	y	-0.00	-0.02	0.00	0.00
BIJ MINIMUM LIJNHOEKEN - BEIJSD					
Qw;rep loodrecht lijn,	x	10.08	5.94	0.00	0.00
Qw;rep loodrecht lijn,	y	-0.00	0.00	0.00	0.00
Qw;rep in lijnrichting,	x	0.00	0.00	0.00	0.00
Qw;rep in lijnrichting,	y	-0.00	0.00	0.00	0.00
Qw;rep 45 graden (+y, +x),	x	5.04	2.97	0.00	0.00
Qw;rep 45 graden (+y, +x),	y	-0.00	0.00	0.00	0.00
Qw;rep 45 graden (-y, +x),	x	5.04	2.97	0.00	0.00
Qw;rep 45 graden (-y, +x),	y	-0.00	0.00	0.00	0.00
BIJ MAXIMUM LIJNHOEKEN - BEIJSD					
Qw;rep loodrecht lijn,	x	10.08	5.92	0.00	0.00
Qw;rep loodrecht lijn,	y	-0.00	-0.24	0.00	0.00
Qw;rep in lijnrichting,	x	0.00	-0.01	0.00	0.00
Qw;rep in lijnrichting,	y	-0.00	0.00	0.00	0.00
Qw;rep 45 graden (+y, +x),	x	5.04	2.72	0.00	0.00
Qw;rep 45 graden (+y, +x),	y	-0.00	-0.11	0.00	0.00
Qw;rep 45 graden (-y, +x),	x	5.04	3.21	0.00	0.00
Qw;rep 45 graden (-y, +x),	y	-0.00	-0.13	0.00	0.00

Mastnummer : 52
Draadnummer : 1
Geleidersoort + plaats : bliksemdr
Geleiders veld 1 en 2 : Br 50

DRAADTREKKRACHTEN - "Ultimate Limit State" (inclusief veiligheidsfactor, table 4.2.11/NL.1)

		VELD 1		VELD 2	
	Hoek t.o.v. lijnrichting	Min.lijnhoek	Max.lijnhoek	Min.lijnhoek	Max.lijnhoek
jTrep bij combinatie (1a)	90°	19.38	19.38	20.65	20.64
	0°	9.04	9.04	12.50	12.53
	45°	15.56	15.56	17.86	17.57
	-45°	15.56	15.56	17.86	18.14
jTrep bij combinatie (1b)	90°	10.61	10.61	15.96	15.96
	0°	9.80	9.80	15.20	15.21
	45°	10.22	10.22	15.60	15.57
	-45°	10.22	10.22	15.60	15.63
jTrep bij combinatie (3)	90°	41.31	41.31	36.18	36.18
	0°	34.87	34.87	31.51	31.52
	45°	38.33	38.33	34.04	33.85
	-45°	38.33	38.33	34.04	34.22
jTrep bij combinatie (4)	90°	9.94	9.94	13.68	13.68
	0°	9.16	9.16	12.80	12.81
	45°	9.56	9.56	13.26	13.22
	-45°	9.56	9.56	13.26	13.29
jTrep bij combinatie (5a)	90°	7.54		10.42	
jTrep bij combinatie (6)	90°	10.18		14.06	

KARAKTERISTIEKE GEGEVENS :

Naam hoogspanningslijn	:	150 kV Zoetermeer - Leiden
Masttype	:	steunmast
Mastnaam	:	mast 52
Mastnummer	:	52
Windgebied	:	II
Bebouwing	:	Onbebouwd
IJsgebied	:	B
Referentie periode	:	50 jaar

		VELD 1	VELD 2
Minimum lijnhoek	[graden]	180	175.3
Maximum lijnhoek	[graden]	180	180
Veldlengte	[m]	432	248
Vaklengte	[m]	680	

* Belastingcombinaties en -factoren: NEN-EN 50341 -1 t/m -3, nov. 2001

* Berekend worden de "Ultimate Limit State" belastingcombinaties, (table 4.2.11/NL.1)

(1a) Permanente belasting met extreme windbelasting
(1b) Permanente belasting met extreme koude
(3) Permanente belasting met extreme ijsbelasting
(4) Permanente belasting met onderhoudsbelasting
(5a) Permanente belasting met torsie
(6) Permanente belasting

* Alle belastingscomponenten zijn exclusief belastingsfactoren, uitgezonderd draadtrekkrachten jTrep

* Assenstelsel:

y = lijnrichting

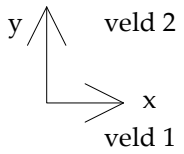

INVOERGEGEVENS VOOR DRAAD No.: 1

Geleidersoort	:	fasedraad
Geleidersoort + plaats	:	fasedraad boven
Geleiders veld 1 en 2	:	CU185
Eigen gewicht draad	[N/m] :	16.62
Draaddoorsnede	[mm²] :	181.6
Draaddiameter	[mm] :	17.5
Elasticiteitsmodulus	[N/mm²] :	130000
Uitzettingscoëfficiënt	[1/°C] :	.000017
Breekbelasting draad	[N] :	72760.5
Maximum percentage breekbelasting	[%] :	100
EDS percentage breekbelasting	[%] :	24
Hoogte draadbevestiging	[m] :	43.05

Eigen gewicht isolator	[kN] :	2.5	2.5
Lengte isolator	[m] :	3.5	3.5
Diameter isolatorschaal	[mm] :	170	170
Hoogte isolator boven maaiveld	[m] :	46.20	46.20
Hoogte verschil draadbevestiging (aangrenzende minus beschouwende mast) (hoger = positief)	[m] :	1	-24.5

INVOERGEGEVENS VOOR DRAAD No.: 2

Geleidersoort	:	fasedraad
Geleidersoort + plaats	:	fasedraad onder
Geleiders veld 1 en 2	:	CU185
Eigen gewicht draad	[N/m] :	16.62
Draaddoorsnede	[mm²] :	181.6
Draaddiameter	[mm] :	17.5
Elasticiteitsmodulus	[N/mm²] :	130000
Uitzettingscoëfficiënt	[1/°C] :	.000017
Breekbelasting draad	[N] :	72760.5
Maximum percentage breekbelasting	[%] :	100
EDS percentage breekbelasting	[%] :	24
Hoogte draadbevestiging	[m] :	33.7

Eigen gewicht isolator	[kN] :	2.5	2.5
Lengte isolator	[m] :	3.5	3.5
Diameter isolatorschaal	[mm] :	170	170
Hoogte isolator boven maaiveld	[m] :	36.85	36.85
Hoogte verschil draadbevestiging (aangrenzende minus beschouwende mast) (hoger = positief)	[m] :	1	-16.5

Mastnummer : 52
Draadnummer : 1
Geleidersoort + plaats : fasedraad boven
Geleiders veld 1 en 2 : CU185
Veldlengte voor gewicht [m] : 441.37

BELASTING COMPONENTEN [kN]

		GELEIDER		ISOLATOR	
		VELD 1	VELD 2	VELD 1	VELD 2
Grep		- 3.57	- 3.82	- 2.50	- 2.50
Qijs;rep		- 1.62	- 1.73	0.00	0.00
Qonderhoud;rep		- 1.00	- 1.00		
BIJ MINIMUM LIJNHOEKEN-					
Qw;rep loodrecht lijn,	x	2.71	1.48	1.00	1.00
Qw;rep loodrecht lijn,	y	-0.00	-0.06	-0.00	-0.00
Qw;rep in lijnrichting,	x	0.00	-0.00	0.00	0.00
Qw;rep in lijnrichting,	y	-0.00	0.00	1.00	1.00
Qw;rep 45 graden (+y, +x),	x	1.36	0.68	0.71	0.71
Qw;rep 45 graden (+y, +x),	y	-0.00	-0.03	0.71	0.71
Qw;rep 45 graden (-y, +x),	x	1.36	0.80	0.71	0.71
Qw;rep 45 graden (-y, +x),	y	-0.00	-0.03	-0.71	-0.71
BIJ MAXIMUM LIJNHOEKEN-					
Qw;rep loodrecht lijn,	x	2.71	1.49	1.00	1.00
Qw;rep loodrecht lijn,	y	-0.00	0.00	-0.00	-0.00
Qw;rep in lijnrichting,	x	0.00	0.00	0.00	0.00
Qw;rep in lijnrichting,	y	-0.00	0.00	1.00	1.00
Qw;rep 45 graden (+y, +x),	x	1.36	0.74	0.71	0.71
Qw;rep 45 graden (+y, +x),	y	-0.00	0.00	0.71	0.71
Qw;rep 45 graden (-y, +x),	x	1.36	0.74	0.71	0.71
Qw;rep 45 graden (-y, +x),	y	-0.00	0.00	-0.71	-0.71
BIJ MINIMUM LIJNHOEKEN - BEIJSD					
Qw;rep loodrecht lijn,	x	6.94	3.79	1.00	1.00
Qw;rep loodrecht lijn,	y	-0.00	-0.16	-0.00	-0.00
Qw;rep in lijnrichting,	x	0.00	-0.01	0.00	0.00
Qw;rep in lijnrichting,	y	-0.00	0.00	1.00	1.00
Qw;rep 45 graden (+y, +x),	x	3.47	1.74	0.71	0.71
Qw;rep 45 graden (+y, +x),	y	-0.00	-0.07	0.71	0.71
Qw;rep 45 graden (-y, +x),	x	3.47	2.05	0.71	0.71
Qw;rep 45 graden (-y, +x),	y	-0.00	-0.08	-0.71	-0.71
BIJ MAXIMUM LIJNHOEKEN - BEIJSD					
Qw;rep loodrecht lijn,	x	6.94	3.80	1.00	1.00
Qw;rep loodrecht lijn,	y	-0.00	0.00	-0.00	-0.00
Qw;rep in lijnrichting,	x	0.00	0.00	0.00	0.00
Qw;rep in lijnrichting,	y	-0.00	0.00	1.00	1.00
Qw;rep 45 graden (+y, +x),	x	3.47	1.90	0.71	0.71
Qw;rep 45 graden (+y, +x),	y	-0.00	0.00	0.71	0.71
Qw;rep 45 graden (-y, +x),	x	3.47	1.90	0.71	0.71
Qw;rep 45 graden (-y, +x),	y	-0.00	0.00	-0.71	-0.71

Mastnummer : 52
Draadnummer : 1
Geleidersoort + plaats : fasedraad boven
Geleiders veld 1 en 2 : CU185

DRAADTREKKRACHTEN - "Ultimate Limit State" (inclusief veiligheidsfactor, table 4.2.11/NL.1)

		VELD 1		VELD 2	
	Hoek t.o.v. lijnrichting	Min.lijnhoek	Max.lijnhoek	Min.lijnhoek	Max.lijnhoek
jTrep bij combinatie (1a)	90°	29.10	29.10	28.02	28.03
	0°	21.41	21.41	21.46	21.45
	45°	25.58	25.58	24.76	25.03
	-45°	25.58	25.58	25.29	25.03
jTrep bij combinatie (1b)	90°	22.53	22.53	24.04	24.04
	0°	22.15	22.15	23.71	23.71
	45°	22.34	22.34	23.86	23.88
	-45°	22.34	22.34	23.89	23.88
jTrep bij combinatie (3)	90°	36.58	36.58	35.79	35.79
	0°	33.36	33.36	33.15	33.14
	45°	35.01	35.01	34.40	34.50
	-45°	35.01	35.01	34.61	34.50
jTrep bij combinatie (4)	90°	26.97	26.97	26.16	26.16
	0°	26.56	26.56	25.78	25.78
	45°	26.77	26.77	25.96	25.97
	-45°	26.77	26.77	25.99	25.97
jTrep bij combinatie (5a)	90°	17.84		17.87	
jTrep bij combinatie (6)	90°	24.08		24.13	

Mastnummer : 52
Draadnummer : 2
Geleidersoort + plaats : fasedraad onder
Geleiders veld 1 en 2 : CU185
Veldlengte voor gewicht [m] : 407.47

BELASTING COMPONENTEN [kN]

		GELEIDER		ISOLATOR	
		VELD 1	VELD 2	VELD 1	VELD 2
Grep		- 3.57	- 3.24	- 2.50	- 2.50
Qijs;rep		- 1.62	- 1.47	0.00	0.00
Qonderhoud;rep		- 1.00	- 1.00		
BIJ MINIMUM LIJNHOEKEN-					
Qw;rep loodrecht lijn,	x	2.38	1.37	0.94	0.94
Qw;rep loodrecht lijn,	y	-0.00	-0.06	-0.00	-0.00
Qw;rep in lijnrichting,	x	0.00	-0.00	0.00	0.00
Qw;rep in lijnrichting,	y	-0.00	0.00	0.94	0.94
Qw;rep 45 graden (+y, +x),	x	1.19	0.63	0.66	0.66
Qw;rep 45 graden (+y, +x),	y	-0.00	-0.03	0.66	0.66
Qw;rep 45 graden (-y, +x),	x	1.19	0.74	0.66	0.66
Qw;rep 45 graden (-y, +x),	y	-0.00	-0.03	-0.66	-0.66
BIJ MAXIMUM LIJNHOEKEN-					
Qw;rep loodrecht lijn,	x	2.38	1.37	0.94	0.94
Qw;rep loodrecht lijn,	y	-0.00	0.00	-0.00	-0.00
Qw;rep in lijnrichting,	x	0.00	0.00	0.00	0.00
Qw;rep in lijnrichting,	y	-0.00	0.00	0.94	0.94
Qw;rep 45 graden (+y, +x),	x	1.19	0.68	0.66	0.66
Qw;rep 45 graden (+y, +x),	y	-0.00	0.00	0.66	0.66
Qw;rep 45 graden (-y, +x),	x	1.19	0.68	0.66	0.66
Qw;rep 45 graden (-y, +x),	y	-0.00	0.00	-0.66	-0.66
BIJ MINIMUM LIJNHOEKEN - BEIJSD					
Qw;rep loodrecht lijn,	x	6.08	3.49	0.94	0.94
Qw;rep loodrecht lijn,	y	-0.00	-0.14	-0.00	-0.00
Qw;rep in lijnrichting,	x	0.00	-0.01	0.00	0.00
Qw;rep in lijnrichting,	y	-0.00	0.00	0.94	0.94
Qw;rep 45 graden (+y, +x),	x	3.04	1.61	0.66	0.66
Qw;rep 45 graden (+y, +x),	y	-0.00	-0.07	0.66	0.66
Qw;rep 45 graden (-y, +x),	x	3.04	1.89	0.66	0.66
Qw;rep 45 graden (-y, +x),	y	-0.00	-0.08	-0.66	-0.66
BIJ MAXIMUM LIJNHOEKEN - BEIJSD					
Qw;rep loodrecht lijn,	x	6.08	3.50	0.94	0.94
Qw;rep loodrecht lijn,	y	-0.00	0.00	-0.00	-0.00
Qw;rep in lijnrichting,	x	0.00	0.00	0.00	0.00
Qw;rep in lijnrichting,	y	-0.00	0.00	0.94	0.94
Qw;rep 45 graden (+y, +x),	x	3.04	1.75	0.66	0.66
Qw;rep 45 graden (+y, +x),	y	-0.00	0.00	0.66	0.66
Qw;rep 45 graden (-y, +x),	x	3.04	1.75	0.66	0.66
Qw;rep 45 graden (-y, +x),	y	-0.00	0.00	-0.66	-0.66

Mastnummer : 52
Draadnummer : 2
Geleidersoort + plaats : fasedraad onder
Geleiders veld 1 en 2 : CU185

DRAADTREKKRACHTEN - "Ultimate Limit State" (inclusief veiligheidsfactor, table 4.2.11/NL.1)

		VELD 1		VELD 2	
	Hoek t.o.v. lijnrichting	Min.lijnhoek	Max.lijnhoek	Min.lijnhoek	Max.lijnhoek
jTrep bij combinatie (1a)	90°	27.54	27.54	26.99	27.00
	0°	21.41	21.41	21.32	21.31
	45°	24.69	24.69	24.15	24.38
	-45°	24.69	24.69	24.61	24.38
jTrep bij combinatie (1b)	90°	22.44	22.44	23.85	23.85
	0°	22.15	22.15	23.56	23.56
	45°	22.30	22.30	23.70	23.71
	-45°	22.30	22.30	23.72	23.71
jTrep bij combinatie (3)	90°	35.86	35.86	35.18	35.19
	0°	33.36	33.36	32.94	32.93
	45°	34.64	34.64	33.99	34.09
	-45°	34.64	34.64	34.18	34.09
jTrep bij combinatie (4)	90°	26.88	26.88	26.94	26.94
	0°	26.56	26.56	26.63	26.62
	45°	26.72	26.72	26.77	26.79
	-45°	26.72	26.72	26.80	26.79
jTrep bij combinatie (5a)	90°	17.84		17.76	
jTrep bij combinatie (6)	90°	24.08		23.98	

Bijlage B Berekening Mast 52; Scia Engineer

Project	150 kV lijn Leiden - Zoetermeer
Onderdeel	Berekening Mast 52
Omschrijving	Controle berekening
Auteur	MG
Datum	11-02-2014
Constructie	Algemeen XYZ
Nationale norm	EC - EN

1. Inhoudsopgave

1. Inhoudsopgave	2
2. Overzicht rekenmodel	3
3. Knoop	4
4. Knoopnummers steunpunten	6
5. 1D-staaf	7
6. Staafnummers mastlichaam	12
6.1. Vak 1	12
6.2. Vak 2 en 3	13
6.3. Vak 4 en 5	14
6.4. Vak 6 en 7	15
6.5. Vak 8 links en rechts	16
6.6. Vak 9	16
6.7. Vak 10 en 11 - rechts	17
6.8. Vak 10l en 11l - links	18
6.9. Vak 12 a,12b,	18
6.10. Vak 12a, 12b,	19
7. Staafnummers traverses	19
7.1. Traverse 1	19
7.2. Traverse 2	20
7.3. Traverse 3	20
7.4. Traverse 4	21
7.5. Traverse 5	21
7.6. Traverse 6	22
8. Staafnummers horizontale verbanden	22
8.1. Horizontaal verband 1	22
8.2. Horizontaal verband 2	23
9. Belastingsgevallen	24
10. Combinaties	24
11. Resultaten	40
11.1. Interne krachten in staaf	40
11.2. Reacties	49
11.3. Resultante op Fundering	49
11.4. Controle UNP profilen	50
11.4.1. Traverse 1 en 2 - onderrand	50
11.4.2. Traverse 2 en 3 - onderrand	52
11.4.3. Vak 9 - onderrand	55
11.4.4. Vak 12 - onderrand	58
11.5. Controle verzwaarde randstaaf van Vak 2	61
11.5.1. Randen : Vak 2	61
11.5.2. Randen : Vak 2	61

2. Overzicht rekenmodel

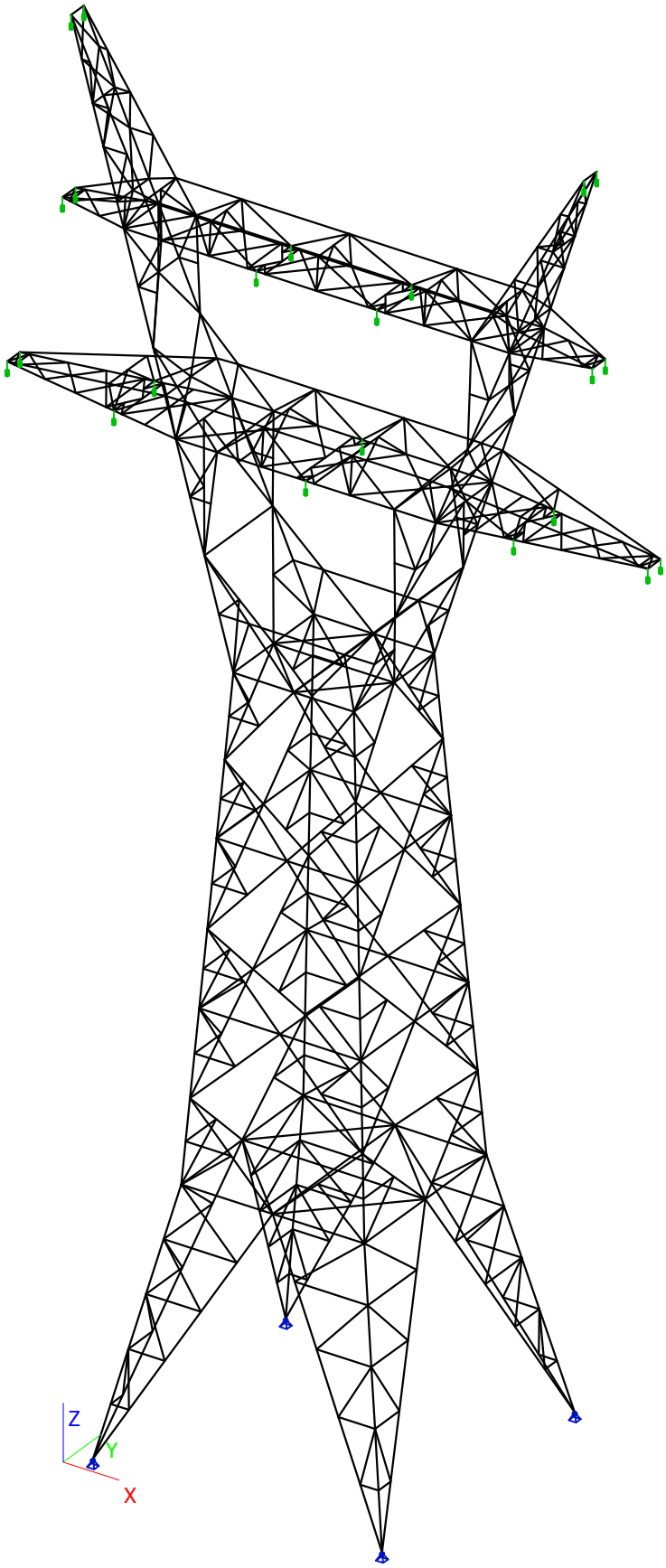

D&C ENGINEERING	Project	150 kV lijn Leiden - Zoetermeer
	Onderdeel	Berekening Mast 52
	Omschrijving	Controle berekening
	Nationale norm	EC - EN
	Auteur	MG

3. Knoop

Naam	Coördinaat X [m]	Coördinaat Y [m]	Coördinaat Z [m]
K1	-8,904	-0,682	49,980
K2	-9,553	0,000	49,980
K3	-10,100	-0,541	51,489
K5	-9,553	0,682	49,980
K7	-10,100	0,541	51,489
K9	-9,553	-0,682	49,980
K13	-9,014	0,821	48,490
K15	-8,333	0,000	46,609
K17	-9,014	-0,821	48,490
K21	-9,764	0,543	51,470
K24	-8,905	0,682	49,980
K28	-8,045	0,821	48,490
K29	-8,333	0,996	46,609
K31	-9,764	-0,543	51,470
K38	-8,045	-0,821	48,490
K39	-8,333	-0,996	46,609
K43	-8,004	-1,081	45,700
K47	-7,279	0,000	43,700
K55	-7,279	-1,268	43,700
K56	-7,279	1,268	43,700
K61	-5,929	1,616	39,971
K63	-5,397	-1,753	38,500
K65	-5,929	-1,616	39,971
K67	-5,938	0,000	39,994
K69	-3,952	2,126	34,509
K70	-5,397	0,000	38,500
K72	-4,676	1,060	36,510
K75	-3,952	-2,126	34,509
K77	-4,678	-1,939	36,515
K78	-4,676	-1,060	36,510
K81	4,678	1,939	36,515
K82	3,814	1,939	36,514
K83	3,677	1,753	38,500
K90	-3,226	2,313	32,505
K91	-2,500	2,500	30,500
K93	0,000	2,500	30,500
K95	-3,226	1,063	32,505
K99	-2,500	0,000	30,500
K102	-2,500	-2,500	30,500
K103	-3,226	-1,063	32,505
K104	-3,226	-2,313	32,505
K109	0,000	-2,500	30,500
K111	3,226	2,313	32,505
K112	2,500	2,500	30,500
K115	8,904	0,682	49,980
K116	9,553	0,000	49,980
K117	8,904	-0,682	49,980
K118	10,100	-0,541	51,489
K120	9,553	0,682	49,980
K122	10,100	0,541	51,489
K124	9,553	-0,682	49,980
K128	9,014	0,821	48,490
K130	8,333	0,000	46,609
K132	9,014	-0,821	48,490
K136	9,764	0,543	51,470
K143	8,045	0,821	48,490
K144	8,333	0,996	46,609
K146	9,764	-0,543	51,470
K153	8,045	-0,821	48,490
K154	8,333	-0,997	46,609
K156	8,004	1,081	45,700
K158	8,004	-1,081	45,700
K162	7,279	0,000	43,700
K170	7,279	-1,268	43,700
K171	7,279	1,268	43,700
K173	-7,185	0,001	47,000

Naam	Coördinaat X [m]	Coördinaat Y [m]	Coördinaat Z [m]
K176	6,434	-1,080	45,700
K177	7,185	0,001	47,000
K186	-2,498	1,081	45,700
K190	-4,465	1,081	45,700
K191	-4,465	0,000	47,000
K194	-4,465	-1,081	45,700
K198	-6,435	-1,081	45,700
K201	-2,498	-1,081	45,700
K205	4,465	0,960	47,000
K206	6,435	1,081	45,700
K207	2,498	1,081	45,700
K211	4,465	1,081	45,700
K212	4,465	0,000	47,000
K215	4,465	-1,081	45,700
K217	4,465	-0,960	47,000
K219	6,435	-1,081	45,700
K222	2,498	-1,081	45,700
K224	0,000	1,081	45,700
K226	0,000	0,000	47,000
K227	0,000	-1,081	45,700
K233	-7,185	0,960	47,000
K235	-7,185	-0,960	47,000
K243	-6,480	1,268	43,700
K245	-6,480	-1,268	43,700
K254	-11,000	-0,400	45,700
K256	-10,647	0,400	53,000
K261	7,185	0,960	47,000
K264	11,000	0,400	45,700
K267	7,185	-0,960	47,000
K269	6,480	1,268	43,700
K271	6,480	-1,268	43,700
K282	11,000	-0,400	45,700
K284	10,647	0,400	53,000
K291	-3,677	1,753	38,500
K294	-5,042	1,614	39,996
K298	5,929	1,616	39,971
K301	5,397	1,753	38,500
K302	5,042	1,614	39,996
K306	-5,042	-1,614	39,996
K307	-3,677	-1,753	38,500
K311	-9,194	-0,811	45,700
K312	-10,645	0,481	45,700
K314	-9,194	0,811	45,700
K315	-10,645	-0,481	45,700
K325	-10,647	-0,400	53,000
K329	-2,145	-1,081	45,700
K332	-2,145	1,081	45,700
K335	-6,435	1,081	45,700
K337	-4,471	-1,081	45,700
K339	-2,861	1,081	45,700
K343	-2,861	-1,081	45,700
K345	-2,145	0,000	45,700
K352	9,194	-0,811	45,700
K353	10,645	0,481	45,700
K355	9,194	0,811	45,700
K356	10,645	-0,481	45,700
K372	2,855	1,081	45,700
K376	2,855	-1,081	45,700
K378	2,145	0,000	45,700
K382	2,145	-1,081	45,700
K384	2,145	1,081	45,700
K388	-8,004	1,081	45,700
K394	-1,837	1,753	38,500
K395	-1,840	0,000	39,996
K396	1,837	1,753	38,500
K397	1,840	0,000	39,996

Naam	Coördinaat X [m]	Coördinaat Y [m]	Coördinaat Z [m]
K400	-8,543	-0,008	39,449
K401	-8,297	-1,256	38,500
K403	-8,297	1,256	38,500
K404	-1,837	-1,753	38,500
K406	1,837	-1,753	38,500
K408	-1,840	-1,614	39,996
K409	-1,840	1,614	39,996
K410	1,840	-1,614	39,996
K411	1,840	1,614	39,996
K414	0,000	1,753	38,500
K420	-13,297	0,400	38,500
K423	-8,543	1,185	39,449
K424	13,297	0,400	38,500
K426	8,297	1,256	38,500
K428	8,543	1,185	39,449
K429	-13,297	-0,400	38,500
K433	-8,543	-1,185	39,449
K434	0,000	-1,753	38,500
K438	3,677	-1,753	38,500
K444	5,397	-1,753	38,500
K447	5,397	0,000	38,500
K448	4,676	1,060	36,510
K451	3,226	1,063	32,505
K456	3,952	-2,126	34,509
K458	13,297	-0,400	38,500
K459	5,929	-1,616	39,971
K460	8,297	-1,256	38,500
K462	8,543	-1,185	39,449
K469	4,678	-1,939	36,515
K470	4,676	-1,060	36,510
K473	-3,677	0,000	38,500
K493	-11,512	0,706	38,500
K494	-12,942	-0,461	38,500
K495	-10,082	0,951	38,500
K496	-11,512	-0,706	38,500
K497	-8,652	1,196	38,500
K498	-10,082	-0,951	38,500
K504	-12,942	0,461	38,500
K507	-8,652	-1,196	38,500
K515	-7,942	0,000	38,500
K519	-7,942	-1,317	38,500
K520	-7,942	1,317	38,500
K521	-6,838	-1,506	38,500
K522	-6,838	1,507	38,500
K527	3,677	0,000	38,500
K531	0,352	0,000	38,500
K532	-0,358	-0,886	38,500
K534	0,352	-1,753	38,500
K538	8,543	-0,008	39,449
K544	-0,358	1,753	38,500
K545	-0,358	-1,753	38,500
K546	5,938	0,000	39,994
K550	11,512	-0,706	38,500
K551	12,942	0,461	38,500
K552	10,082	-0,951	38,500
K553	11,512	0,706	38,500
K554	8,652	-1,196	38,500
K555	10,082	0,951	38,500
K561	12,942	-0,461	38,500
K564	8,652	1,196	38,500
K572	7,942	0,000	38,500
K576	7,942	1,317	38,500
K577	7,942	-1,317	38,500
K578	6,837	1,506	38,500
K579	6,837	-1,506	38,500
K589	-0,358	0,886	38,500

D&C ENGINEERING	Project	150 kV lijn Leiden - Zoetermeer
	Onderdeel	Berekening Mast 52
	Omschrijving	Controle berekening
	Nationale norm	EC - EN
	Auteur	MG

Naam	Coördinaat X [m]	Coördinaat Y [m]	Coördinaat Z [m]
K591	0,352	1,753	38,500
K598	5,042	-1,614	39,996
K601	3,813	-1,939	36,514
K605	3,226	-1,063	32,505
K606	3,226	-2,313	32,505
K618	10,647	-0,400	53,000
K619	-6,526	-1,462	41,620
K620	-6,526	1,462	41,620
K621	6,526	1,462	41,620
K622	6,527	-1,462	41,621
K623	-4,465	0,960	47,000
N1	-6,000	-6,000	0,000
N2	-3,800	-3,800	10,500
N3	6,000	-6,000	0,000
N4	3,800	-3,800	10,500
N5	-3,800	3,800	10,500
N6	-6,000	6,000	0,000
N7	6,000	6,000	0,000
N8	3,800	3,800	10,500
N20	-5,560	-5,560	2,100
N21	-5,120	-5,120	4,200
N22	-4,680	-4,680	6,300
N55	-5,120	-3,600	4,200
N57	-4,240	-1,200	8,400
N59	-3,582	-3,582	13,860
N61	3,582	-3,582	13,860
N62	-3,582	3,582	13,860
N65	3,582	3,582	13,860
N9	0,000	-3,800	10,500
N66	3,800	0,000	10,500
N67	0,000	3,800	10,500
N68	-3,800	0,000	10,500
N69	-3,691	-3,691	12,180
N14	-1,791	-3,691	12,180
N15	3,691	-3,691	12,180
N16	1,791	-3,691	12,180
N17	3,691	-1,791	12,180
N18	3,691	1,791	12,180
N19	3,691	3,691	12,180
N70	1,791	3,691	12,180
N71	-1,791	3,691	12,180
N72	-3,691	3,691	12,180
N73	-3,691	1,791	12,180
N74	-3,691	-1,791	12,180
N76	-3,151	-3,151	20,480
N78	3,151	-3,151	20,480
N79	-3,151	3,151	20,480
N82	3,151	3,151	20,480
N83	-3,353	-3,353	17,382
N84	3,353	-3,353	17,382
N85	3,353	3,353	17,382
N86	-3,353	3,353	17,382
N87	1,791	-3,467	15,621
N88	3,467	-3,467	15,621
N89	3,467	-1,791	15,621
N90	3,467	1,791	15,621
N91	3,467	3,467	15,621
N92	1,791	3,467	15,621
N93	-1,791	3,467	15,621
N94	-3,467	3,467	15,621
N95	-3,467	1,791	15,621
N96	-3,467	-1,791	15,621
N97	-3,467	-3,467	15,621
N98	-1,791	-3,467	15,621
N99	1,576	-3,252	18,931
N100	3,252	-3,252	18,931
N101	3,252	-1,576	18,931
N102	3,252	1,575	18,931

Naam	Coördinaat X [m]	Coördinaat Y [m]	Coördinaat Z [m]
N33	3,252	3,252	18,931
N103	1,576	3,252	18,931
N104	-1,576	3,252	18,931
N105	-3,252	3,252	18,931
N106	-3,252	1,575	18,931
N38	-3,252	-1,576	18,931
N107	-3,252	-3,252	18,931
N108	-1,576	-3,252	18,931
N114	-2,720	-2,721	27,100
N116	2,721	-2,721	27,100
N117	-2,720	2,720	27,100
N120	2,721	2,720	27,100
N121	-2,920	-2,920	24,033
N122	2,920	-2,920	24,033
N123	2,920	2,920	24,033
N124	-2,920	2,920	24,033
N125	1,576	-3,036	22,256
N126	3,036	-3,036	22,256
N127	3,036	-1,576	22,256
N128	3,036	1,575	22,256
N129	3,036	3,035	22,256
N130	1,576	3,035	22,256
N131	-1,576	3,035	22,256
N132	-3,036	3,035	22,256
N133	-3,036	1,575	22,256
N134	-3,036	-1,576	22,256
N135	-3,036	-3,036	22,256
N136	-1,576	-3,036	22,256
N137	1,361	-2,821	25,566
N138	2,821	-2,821	25,566
N139	2,821	-1,361	25,566
N140	2,821	1,360	25,566
N141	2,821	2,820	25,566
N142	1,361	2,820	25,566
N143	-1,360	2,820	25,566
N144	-2,820	2,820	25,566
N145	-2,820	1,360	25,566
N146	-2,820	-1,361	25,566
N147	-2,820	-2,821	25,566
N148	-1,360	-2,821	25,566
N149	2,920	0,000	24,033
N150	0,000	2,920	24,033
N151	-2,920	0,000	24,033
N152	0,000	-2,920	24,033
N156	2,500	-2,500	30,500
N165	-2,610	-2,611	28,800
N166	-1,360	-2,611	28,800
N167	1,360	-2,611	28,800
N168	2,610	-2,611	28,800
N169	2,610	-1,361	28,800
N170	2,610	1,360	28,800
N171	2,610	2,610	28,800
N172	1,361	2,610	28,800
N173	-1,360	2,610	28,800
N174	-2,610	2,610	28,800
N175	-2,610	1,360	28,800
N176	-2,610	-1,361	28,800
K624	-0,358	0,000	38,500
K625	2,500	-0,001	30,500
K626	-5,397	1,753	38,500
K627	-4,464	-0,960	47,000
K628	3,952	2,126	34,509
K629	-3,814	-1,939	36,515
K630	-3,814	1,939	36,515
N12	0,000	0,000	10,500
N183	0,000	0,000	30,500
N191	0,000	0,960	47,000
N192	0,000	-0,960	47,000

Naam	Coördinaat X [m]	Coördinaat Y [m]	Coördinaat Z [m]
K631	-11,000	0,400	45,700
K661	-5,560	-4,800	2,100
K662	-4,800	-5,560	2,100
K663	-3,600	-5,120	4,200
K665	-2,400	-4,680	6,300
K666	-4,680	-2,400	6,300
K667	-1,200	-4,240	8,400
K668	-4,240	-4,240	8,400
K669	4,240	-1,200	8,400
K670	4,240	-4,240	8,400
K671	4,680	-2,400	6,300
K672	4,680	-4,680	6,300
K673	5,120	-3,600	4,200
K674	5,560	-4,800	2,100
K675	5,120	-5,120	4,200
K676	5,560	-5,560	2,100
K677	4,800	-5,560	2,100
K678	3,600	-5,120	4,200
K679	2,400	-4,680	6,300
K680	1,200	-4,240	8,400
K681	1,200	4,240	8,400
K682	4,240	4,240	8,400
K683	2,400	4,680	6,300
K684	4,680	4,680	6,300
K685	3,600	5,120	4,200
K686	4,800	5,560	2,100
K687	5,120	5,120	4,200
K688	5,560	5,560	2,100
K689	5,560	4,800	2,100
K690	5,120	3,600	4,200
K691	4,680	2,400	6,300
K692	4,240	1,200	8,400
K693	-4,240	1,200	8,400
K694	-4,240	4,240	8,400
K695	-4,680	2,400	6,300
K696	-4,680	4,680	6,300
K697	-5,120	3,600	4,200
K698	-5,560	4,800	2,100
K699	-5,120	5,120	4,200
K700	-5,560	5,560	2,100
K701	-4,800	5,560	2,100
K702	-3,600	5,120	4,200
K703	-2,400	4,680	6,300
K704	-1,200	4,240	8,400
N247	0,000	-3,353	17,382
K706	3,353	0,000	17,382
K709	0,000	3,353	17,382
K712	-3,353	0,000	17,382
K714	-6,838	0,000	38,500
K715	6,837	0,000	38,500
K716	1,976	2,313	32,505
K717	-1,976	2,313	32,505
K718	-1,976	-2,313	32,505
K719	1,976	-2,313	32,505
K720	-4,678	1,939	36,515
K721	6,526	-1,462	41,620
K728	6,527	1,462	41,621
K729	8,684	0,000	45,700
K730	8,684	0,000	45,700
K731	8,297	-0,598	38,500
K732	8,297	0,598	38,500
K733	-0,003	-1,320	38,500
K734	-0,003	1,320	38,500
K735	-8,297	-0,598	38,500
K736	-8,297	0,598	38,500
K737	-2,498	-1,081	45,700
K738	-2,503	-0,541	45,700
K739	-2,503	0,541	45,700

Naam	Coördinaat X [m]	Coördinaat Y [m]	Coördinaat Z [m]
K740	-2,145	1,081	45,700
K741	2,498	-1,081	45,700

Naam	Coördinaat X [m]	Coördinaat Y [m]	Coördinaat Z [m]
K742	2,500	-0,541	45,700
K743	2,500	0,541	45,700

4. Knoopnummers steunpunten

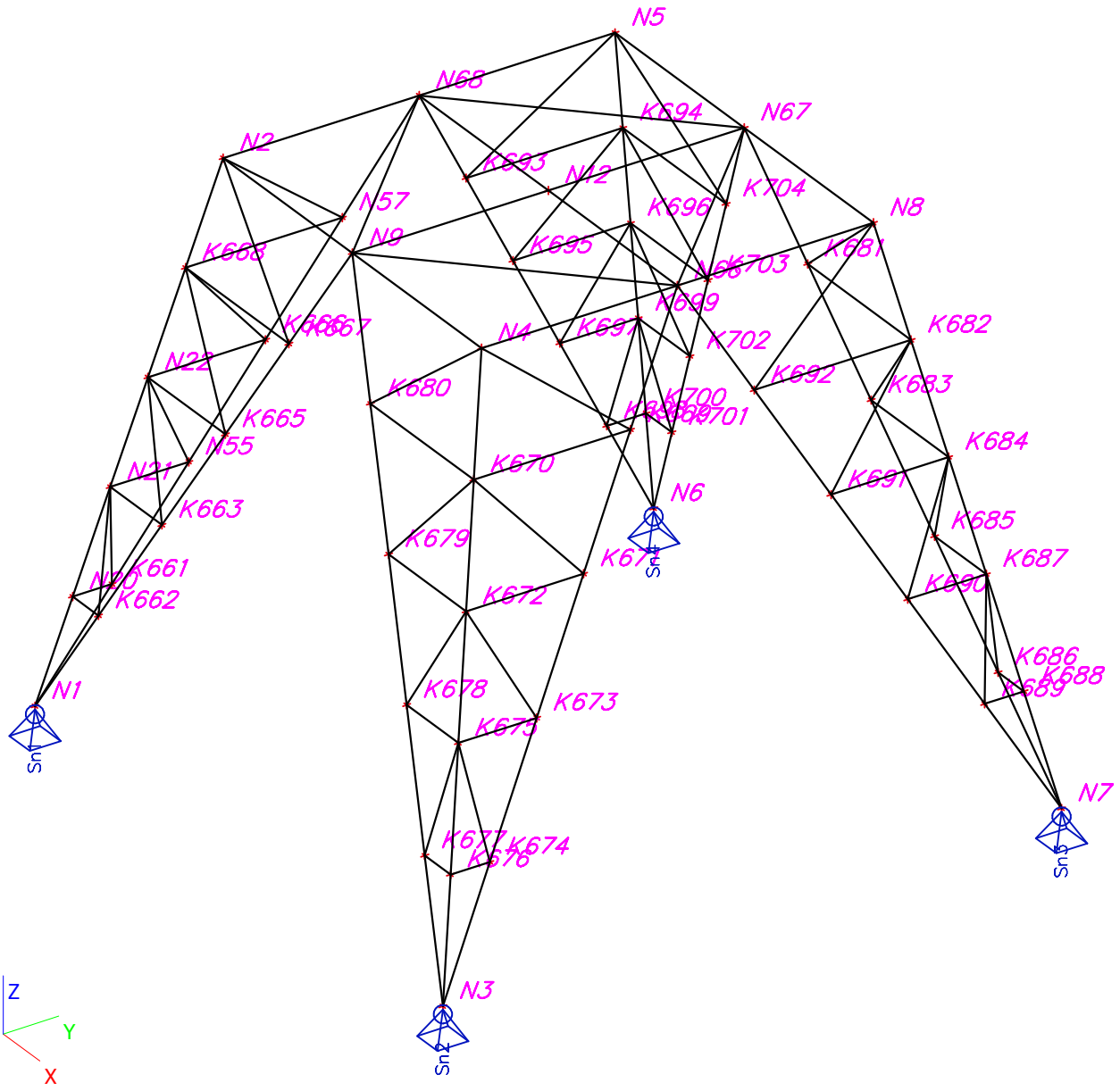

5. 1D-staaf

Naam	Laag	Doorsnede	Lengte [m]
B7	HorVerb1	CS75 - L120X11	7,600
B8	Vak2	CS100 - L100X75X7	4,916
B9	Vak1	CS3 - HFLue180x90x10	12,292
B10	Vak2	CS100 - L100X75X7	4,916
B11	HorVerb1	CS39 - ISEA80/80/6	5,374
B12	Vak2	CS100 - L100X75X7	4,916
B13	HorVerb1	CS39 - ISEA80/80/6	5,374
B14	Vak1	CS3 - HFLue180x90x10	12,292
B16	Vak1	CS3 - HFLue180x90x10	12,292
B17	HorVerb1	CS46 - ISEA70/70/5	3,800
B18	Vak1	CS3 - HFLue180x90x10	12,292
B22	Vak3	CS68 - L100X75X7	9,452
B26	Vak3	CS68 - L100X75X7	9,452
B31	Vak2	CS100 - L100X75X7	4,916
B32	Vak2	CS100 - L100X75X7	4,916
B33	Vak2	CS100 - L100X75X7	4,916
B34	Vak2	CS100 - L100X75X7	4,916
B36	Vak5	CS73 - L100X75X7	4,360
B37	Vak5	CS73 - L100X75X7	4,360
B38	Vak5	CS73 - L100X75X7	4,360
B39	Vak5	CS73 - L100X75X7	4,360
B73	Vak3	CS68 - L100X75X7	9,452
B74	Vak3	CS68 - L100X75X7	9,452
B75	Vak3	CS68 - L100X75X7	9,452
B76	Vak3	CS68 - L100X75X7	9,452
B89	Vak1	CS3 - HFLue180x90x10	12,292
B90	Vak1	CS3 - HFLue180x90x10	12,292
B91	Vak1	CS3 - HFLue180x90x10	12,292
B92	Vak1	CS3 - HFLue180x90x10	12,292
B93	Vak2	CS100 - L100X75X7	4,916
B94	Vak3	CS68 - L100X75X7	9,452
B95	Vak3	CS68 - L100X75X7	9,452
B98	Vak4	CS70 - L100X75X7	8,859
B99	Vak4	CS70 - L100X75X7	8,860
B100	Vak4	CS70 - L100X75X7	8,860
B101	Vak4	CS70 - L100X75X7	8,859
B102	Vak4	CS81 - L60X5	2,920
B103	Vak4	CS81 - L60X5	2,920
B104	Vak4	CS81 - L60X5	2,920
B105	Vak4	CS81 - L60X5	2,920
B106	Vak4	CS70 - L100X75X7	8,859
B107	Vak4	CS70 - L100X75X7	8,859
B108	Vak4	CS70 - L100X75X7	8,860
B109	Vak4	CS70 - L100X75X7	8,860
B110	Vak4	CS81 - L60X5	2,920
B111	Vak4	CS81 - L60X5	2,920
B112	Vak4	CS81 - L60X5	2,920
B113	Vak4	CS81 - L60X5	2,920
B114	Vak5	CS73 - L100X75X7	4,360
B115	Vak5	CS73 - L100X75X7	4,360
B116	Vak5	CS73 - L100X75X7	4,360
B117	Vak5	CS73 - L100X75X7	4,360
B118	HorVerb1	CS75 - L120X11	7,600
B119	HorVerb1	CS75 - L120X11	7,600
B120	HorVerb1	CS75 - L120X11	7,600
B121	HorVerb1	CS39 - ISEA80/80/6	5,374
B122	HorVerb1	CS39 - ISEA80/80/6	5,374
B123	HorVerb1	CS46 - ISEA70/70/5	7,600
B124	HorVerb1	CS46 - ISEA70/70/5	3,800
B129	HorVerb2	CS79 - L100X8	3,536
B130	HorVerb2	CS79 - L100X8	3,536
B131	HorVerb2	CS79 - L100X8	3,535
B132	HorVerb2	CS79 - L100X8	3,536
B133	HorVerb2	CS77 - L60X5	5,000
B134	HorVerb2	CS77 - L60X5	2,500
B135	HorVerb2	CS77 - L60X5	2,500
C1	Vak1	CS2 - L150X14	10,951

Naam	Laag	Doorsnede	Lengte [m]
C2	Vak1	CS2 - L150X14	10,951
C3	Vak1	CS2 - L150X14	10,951
C4	Vak1	CS2 - L150X14	10,951
C5	Vak2	CS167 - 2LX (L140X13; 15)	3,374
C6	Vak2	CS167 - 2LX (L140X13; 15)	3,374
C7	Vak2	CS167 - 2LX (L140X13; 15)	3,374
C8	Vak2	CS167 - 2LX (L140X13; 15)	3,374
C9	Vak3	CS103 - HFLeq140x140x13	6,648
C10	Vak3	CS103 - HFLeq140x140x13	6,648
C11	Vak3	CS103 - HFLeq140x140x13	6,648
C12	Vak3	CS103 - HFLeq140x140x13	6,648
C13	Vak4	CS13 - HFLeq130x130x12	6,648
C14	Vak4	CS13 - HFLeq130x130x12	6,648
C15	Vak4	CS13 - HFLeq130x130x12	6,648
C16	Vak4	CS13 - HFLeq130x130x12	6,648
C17	Vak5	CS112 - HFLeq130x130x12	3,414
C18	Vak5	CS112 - HFLeq130x130x12	3,414
C19	Vak5	CS112 - HFLeq130x130x12	3,414
C20	Vak5	CS112 - HFLeq130x130x12	3,414
S1	CrossArm6	CS140 - L45X30X5	0,941
S2	CrossArm6	CS138 - L45X5	1,862
S3	CrossArm6	CS137 - L45X30X5	2,018
S4	CrossArm6	CS138 - L45X5	1,862
S5	CrossArm6	CS137 - L45X30X5	2,018
S6	CrossArm6	CS136 - L45X5	1,364
S7	CrossArm6	CS135 - L45X30X5	2,184
S8	CrossArm6	CS134 - L45X5	2,162
S9	CrossArm6	CS135 - L45X30X5	2,184
S10	CrossArm6	CS134 - L45X5	2,162
S11	CrossArm6	CS140 - L45X30X5	1,511
S12	CrossArm6	CS140 - L45X30X5	0,336
S13	CrossArm6	CS140 - L45X30X5	1,501
S14	CrossArm6	CS138 - L45X5	0,649
S15	CrossArm6	CS139 - L50X40X5	1,911
S16	CrossArm6	CS140 - L45X30X5	0,969
S17	CrossArm6	CS140 - L45X30X5	1,511
S18	CrossArm6	CS140 - L45X30X5	0,336
S19	CrossArm6	CS140 - L45X30X5	1,501
S20	CrossArm6	CS138 - L45X5	0,649
S21	CrossArm6	CS139 - L50X40X5	1,911
S22	CrossArm6	CS140 - L45X30X5	0,969
S23	Vak11	CS130 - L45X30X5	1,450
S24	Vak11	CS130 - L45X30X5	1,451
S25	Vak11	CS131 - L45X5	1,993
S26	Vak10	CS121 - L80X6	2,386
S27	Vak10	CS121 - L80X6	2,652
S28	Vak10	CS121 - L80X6	2,386
S29	Vak10	CS121 - L80X6	2,651
S30	Vak10	CS123 - L45X5	2,536
S31	Vak8	CS93 - L70x70x5	2,265
S33	Vak8	CS4 - L50X40X5	1,616
S34	Vak8	CS93 - L70x70x5	2,366
S35	Vak8	CS4 - L50X40X5	1,616
S36	Vak8	CS93 - L70x70x5	2,265
S38	Vak7	CS4 - L50X40X5	0,879
S41	Vak7	CS4 - L50X40X5	0,879
S42	Vak7	CS92 - L50X40X5	2,227
S43	Vak7l	CS4 - L50X40X5	0,864
S44	Vak7l	CS92 - L50X40X5	2,231
S46	Vak6	CS86 - L130X12	3,952
S47	Vak6	CS86 - L130X12	3,952
S49	Vak6	CS84 - L100x100x6	2,080
S51	Vak6	CS88 - L50X40X5	2,571
S52	Vak6	CS88 - L50X40X5	1,250
S54	Vak7	CS37 - HFLeq75x75x8	4,252
S55	Vak6	CS88 - L50X40X5	2,571
S56	Vak6	CS88 - L50X40X5	1,250

D&C ENGINEERING	Project	150 kV lijn Leiden - Zoetermeer
	Onderdeel	Berekening Mast 52
	Omschrijving	Controle berekening
	Nationale norm	EC - EN
	Auteur	MG

Naam	Laag	Doorsnede	Lengte [m]
S61	Vak6	CS84 - L100x100x6	2,080
S63	CrossArm5	CS140 - L45X30X5	0,941
S64	CrossArm5	CS140 - L45X30X5	0,941
S65	CrossArm5	CS138 - L45X5	1,862
S66	CrossArm5	CS137 - L45X30X5	2,018
S67	CrossArm5	CS138 - L45X5	1,862
S68	CrossArm5	CS137 - L45X30X5	2,018
S69	CrossArm5	CS136 - L45X5	1,364
S70	CrossArm5	CS135 - L45X30X5	2,184
S71	CrossArm5	CS134 - L45X5	2,162
S72	CrossArm5	CS135 - L45X30X5	2,184
S73	CrossArm5	CS134 - L45X5	2,162
S74	CrossArm5	CS140 - L45X30X5	1,511
S75	CrossArm5	CS140 - L45X30X5	0,336
S76	CrossArm5	CS140 - L45X30X5	1,501
S77	CrossArm5	CS138 - L45X5	0,649
S78	CrossArm5	CS139 - L50X40X5	1,911
S79	CrossArm5	CS140 - L45X30X5	0,969
S80	CrossArm5	CS140 - L45X30X5	1,511
S81	CrossArm5	CS140 - L45X30X5	0,336
S82	CrossArm5	CS140 - L45X30X5	1,501
S83	CrossArm5	CS138 - L45X5	0,649
S84	CrossArm5	CS139 - L50X40X5	1,911
S85	CrossArm5	CS140 - L45X30X5	0,969
S86	Vak11l	CS130 - L45X30X5	1,450
S87	Vak11l	CS130 - L45X30X5	1,451
S88	Vak11l	CS131 - L45X5	1,993
S89	Vak10l	CS121 - L80X6	2,386
S90	Vak10l	CS121 - L80X6	2,652
S91	Vak10l	CS121 - L80X6	2,386
S92	Vak10l	CS121 - L80X6	2,651
S93	Vak10l	CS123 - L45X5	2,536
S94	Vak11	CS128 - L60X6	1,851
S95	Vak11	CS128 - L60X6	1,849
S96	Vak11l	CS128 - L60X6	1,850
S97	Vak11l	CS128 - L60X6	1,849
S98	Vak11	CS127 - L50X5	1,920
S99	Vak11l	CS127 - L50X5	1,920
S100	Vak12d	CS24 - LS100X6	2,364
S101	Vak12c	CS146 - L50X40X5	2,361
S102	Vak12c	CS145 - L90x90x6	2,818
S103	Vak12c	CS149 - L50X40X5	1,691
S104	Vak12c	CS148 - L50X5	1,306
S105	Vak12c	CS149 - L50X40X5	1,691
S106	Vak12c	CS148 - L50X5	1,920
S107	Vak12d	CS24 - LS100X6	2,364
S108	Vak12c	CS148 - L50X5	1,306
S109	Vak12c	CS146 - L50X40X5	2,360
S110	Vak12c	CS145 - L90x90x6	2,819
S111	Vak12a	CS24 - LS100X6	2,363
S112	Vak12b	CS146 - L50X40X5	2,361
S113	Vak12b	CS145 - L90x90x6	2,819
S114	Vak12b	CS149 - L50X40X5	1,691
S115	Vak12b	CS148 - L50X5	1,306
S116	Vak12b	CS149 - L50X40X5	1,691
S117	Vak12b	CS148 - L50X5	1,920
S118	Vak12a	CS24 - LS100X6	2,363
S119	Vak12b	CS148 - L50X5	1,306
S120	Vak12b	CS146 - L50X40X5	2,361
S121	Vak12b	CS148 - L50X5	1,306
S122	Vak12b	CS149 - L50X40X5	1,691
S123	Vak12b	CS149 - L50X40X5	1,691
S124	Vak12b	CS148 - L50X5	1,920
S125	Vak12b	CS148 - L50X5	1,306
S126	Vak12b	CS145 - L90x90x6	2,819
S127	Vak12d	CS97 - L100X8	2,721
S129	Vak11	CS132 - L50X40X5	1,213
S130	CrossArm4	CS147 - L50X40X5	2,880
S131	Vak11	CS126 - L80x80x6	1,541

Naam	Laag	Doorsnede	Lengte [m]
S132	Vak11	CS126 - L80x80x6	1,541
S133	Vak10	CS7 - L45X30X5	0,799
S134	Vak10	CS7 - L45X30X5	0,800
S135	Vak10	CS96 - L120X80X8	4,098
S136	Vak10	CS122 - L50X40X5	2,179
S137	Vak11	CS132 - L50X40X5	1,213
S138	CrossArm4	CS147 - L50X40X5	2,880
S139	Vak11	CS125 - L75x75x6	1,506
S140	Vak10	CS96 - L120X80X8	4,099
S141	Vak11	CS125 - L75x75x6	1,506
S142	Vak11l	CS132 - L50X40X5	1,213
S143	CrossArm3	CS147 - L50X40X5	2,880
S144	Vak11l	CS126 - L80x80x6	1,541
S145	Vak11l	CS126 - L80x80x6	1,541
S146	Vak10l	CS7 - L45X30X5	0,800
S147	Vak10l	CS7 - L45X30X5	0,800
S148	Vak10l	CS96 - L120X80X8	4,098
S149	Vak10l	CS122 - L50X40X5	2,179
S150	Vak10l	CS122 - L50X40X5	2,179
S151	Vak11l	CS132 - L50X40X5	1,213
S152	CrossArm3	CS147 - L50X40X5	2,880
S153	Vak11l	CS125 - L75x75x6	1,506
S154	Vak10l	CS96 - L120X80X8	4,099
S155	Vak11l	CS125 - L75x75x6	1,506
S156	Vak8l	CS93 - L70x70x5	2,264
S159	Vak8	CS120 - ISEA130/130/10	0,888
S160	Vak8l	CS120 - ISEA130/130/10	0,888
S161	Vak9b	CS151 - HFLeq130x130x12	3,202
S162	Vak8l	CS155 - HFLue120x80x8	1,544
S164	Vak8	CS155 - HFLue120x80x8	1,544
S166	Vak8	CS120 - ISEA130/130/10	0,888
S167	CrossArm4	CS150 - L55x55x5	1,943
S168	CrossArm4	CS148 - L50X5	2,235
S169	CrossArm4	CS150 - L55x55x5	1,943
S170	CrossArm4	CS148 - L50X5	2,235
S171	CrossArm4	CS101 - UNP120	3,073
S172	CrossArm4	CS101 - UNP120	3,073
S173	CrossArm4	CS30 - UNP140	0,961
S175	CrossArm6	CS148 - L50X5	0,800
S177	Vak6	CS82 - L130X12	4,280
S178	Vak12c	CS15 - HFLeq60x60x5	3,046
S179	Vak12c	CS15 - HFLeq60x60x5	3,046
S180	Vak12d	CS150 - L55x55x5	2,672
S181	Vak12d	CS150 - L55x55x5	2,671
S182	Vak12d	CS15 - HFLeq60x60x5	2,921
S183	Vak12c	CS15 - HFLeq60x60x5	2,696
S184	Vak12d	CS15 - HFLeq60x60x5	2,925
S185	Vak12c	CS15 - HFLeq60x60x5	2,692
S186	Vak12c	CS149 - L50X40X5	1,297
S187	Vak12c	CS149 - L50X40X5	1,297
S188	Vak12c	CS30 - UNP140	2,163
S189	Vak12c	CS30 - UNP140	2,163
S190	CrossArm3	CS150 - L55x55x5	1,943
S191	CrossArm3	CS148 - L50X5	2,235
S192	CrossArm3	CS150 - L55x55x5	1,943
S193	CrossArm3	CS148 - L50X5	2,235
S194	CrossArm3	CS101 - UNP120	3,073
S195	CrossArm3	CS101 - UNP120	3,073
S196	CrossArm3	CS30 - UNP140	0,961
S198	Vak12a	CS150 - L55x55x5	2,672
S199	Vak12a	CS150 - L55x55x5	2,672
S200	Vak12a	CS15 - HFLeq60x60x5	2,925
S201	Vak12b	CS15 - HFLeq60x60x5	2,696
S202	Vak12a	CS15 - HFLeq60x60x5	2,925
S203	Vak12b	CS15 - HFLeq60x60x5	2,696
S204	Vak12b	CS149 - L50X40X5	1,294
S205	Vak12b	CS149 - L50X40X5	1,294
S206	Vak12b	CS15 - HFLeq60x60x5	3,046
S207	Vak12b	CS15 - HFLeq60x60x5	3,046

D&C ENGINEERING	Project	150 kV lijn Leiden - Zoetermeer
	Onderdeel	Berekening Mast 52
	Omschrijving	Controle berekening
	Nationale norm	EC - EN
	Auteur	MG

Naam	Laag	Doorsnede	Lengte [m]
S208	Vak12b	CS30 - UNP140	2,163
S209	Vak12b	CS30 - UNP140	2,163
S210	Vak12a	CS101 - UNP120	1,569
S211	Vak11l	CS129 - L65x65x6	2,163
S212	Vak11	CS129 - L65x65x6	2,163
S213	Vak12a	CS101 - UNP120	1,569
S214	Vak9c	CS156 - L50X5	2,305
S215	Vak9c	CS156 - L50X5	2,305
S216	CrossArm2	CS156 - L50X5	2,369
S217	CrossArm2	CS158 - L50X40X5	1,587
S218	CrossArm2	CS158 - L50X40X5	1,600
S219	Vak9c	CS156 - L50X5	2,305
S220	Vak9c	CS156 - L50X5	2,305
S221	Vak9c	CS156 - L50X5	3,227
S222	Vak9c	CS156 - L50X5	3,227
S223	CrossArm1	CS156 - L50X5	2,369
S224	Vak9c	CS154 - L100x100x8	2,376
S225	Vak9b	CS153 - L120x120x8	2,373
S226	Vak9c	CS154 - L100x100x8	2,376
S227	Vak9a	CS153 - L120x120x8	2,373
S228	CrossArm2	CS40 - L65X50X5	7,610
S229	CrossArm2	CS157 - L45X5	0,983
S231	CrossArm1	CS40 - L65X50X5	7,611
S232	CrossArm1	CS158 - L50X40X5	2,810
S233	CrossArm1	CS157 - L45X5	0,983
S235	CrossArm2	CS40 - L65X50X5	7,611
S236	CrossArm2	CS158 - L50X40X5	2,811
S237	CrossArm2	CS157 - L45X5	0,983
S239	Vak9c	CS154 - L100x100x8	2,376
S240	Vak9b	CS153 - L120x120x8	2,373
S241	Vak9c	CS154 - L100x100x8	2,376
S242	Vak9a	CS153 - L120x120x8	2,373
S243	Vak8l	CS93 - L70x70x5	2,366
S244	Vak8l	CS4 - L50X40X5	1,616
S245	Vak8l	CS93 - L70x70x5	2,366
S247	Vak7l	CS4 - L50X40X5	0,879
S248	Vak7l	CS92 - L50X40X5	2,227
S249	Vak6	CS88 - L50X40X5	2,571
S250	Vak6	CS88 - L50X40X5	1,250
S252	Vak7l	CS161 - L120X80X8	4,747
S253	CrossArm1	CS40 - L65X50X5	7,611
S254	CrossArm1	CS158 - L50X40X5	2,810
S255	CrossArm1	CS157 - L45X5	0,983
S257	Vak8l	CS4 - L50X40X5	1,616
S258	Vak8l	CS120 - ISEA130/130/10	0,888
S260	Vak7l	CS4 - L50X40X5	0,879
S263	Vak9b	CS95 - L75x75x6	2,542
S264	Vak9c	CS95 - L75x75x6	2,294
S265	Vak9b	CS95 - L75x75x6	2,456
S266	Vak9b	CS95 - L75x75x6	2,542
S267	Vak9c	CS95 - L75x75x6	2,294
S268	Vak9b	CS43 - L75x75x6	3,507
S270	Vak8	CS36 - ISEA70/70/5	1,753
S273	CrossArm2	CS159 - L55x55x5	1,845
S274	CrossArm2	CS159 - L55x55x5	2,188
S275	CrossArm2	CS159 - L55x55x5	2,579
S278	CrossArm2	CS159 - L55x55x5	1,845
S279	CrossArm2	CS159 - L55x55x5	2,188
S280	CrossArm2	CS159 - L55x55x5	2,579
S282	CrossArm2	CS152 - UNP140	0,921
S283	CrossArm2	CS152 - UNP140	2,391
S284	CrossArm2	CS94 - L50X5	1,390
S285	CrossArm2	CS94 - L50X5	1,391
S286	CrossArm2	CS152 - UNP140	2,635
S287	CrossArm2	CS43 - L75x75x6	3,013
S288	CrossArm2	CS95 - L75x75x6	2,269
S289	CrossArm2	CS144 - UNP160	8,015
S290	Vak9a	CS95 - L75x75x6	2,456
S291	Vak9a	CS95 - L75x75x6	2,542

Naam	Laag	Doorsnede	Lengte [m]
S292	Vak9c	CS95 - L75x75x6	2,298
S293	Vak9c	CS4 - L50X40X5	1,135
S294	Vak9c	CS4 - L50X40X5	1,121
S295	CrossArm1	CS144 - UNP160	8,015
S296	CrossArm1	CS158 - L50X40X5	1,587
S297	CrossArm1	CS158 - L50X40X5	1,600
S298	Vak8l	CS36 - ISEA70/70/5	3,507
S299	Vak9c	CS44 - UNP160	3,507
S300	Vak8l	CS93 - L70x70x5	2,265
S301	Vak7l	CS92 - L50X40X5	2,227
S302	CrossArm1	CS159 - L55x55x5	1,845
S303	CrossArm1	CS159 - L55x55x5	2,188
S304	CrossArm1	CS159 - L55x55x5	2,579
S307	CrossArm1	CS159 - L55x55x5	1,845
S308	CrossArm1	CS159 - L55x55x5	2,188
S309	CrossArm1	CS159 - L55x55x5	2,579
S311	CrossArm1	CS152 - UNP140	0,921
S312	CrossArm1	CS152 - UNP140	2,391
S313	CrossArm1	CS94 - L50X5	1,390
S314	CrossArm1	CS94 - L50X5	1,391
S315	CrossArm1	CS152 - UNP140	2,634
S316	CrossArm1	CS43 - L75x75x6	3,013
S317	CrossArm1	CS95 - L75x75x6	2,269
S318	Vak9a	CS95 - L75x75x6	2,456
S319	Vak9a	CS95 - L75x75x6	2,542
S320	Vak9c	CS95 - L75x75x6	2,298
S321	Vak9a	CS43 - L75x75x6	3,507
S322	Vak9c	CS4 - L50X40X5	1,135
S323	Vak9c	CS4 - L50X40X5	1,121
S324	Vak9c	CS44 - UNP160	3,507
S328	Vak8l	CS155 - HFLue120x80x8	1,544
S330	Vak7l	CS4 - L50X40X5	0,864
S331	Vak7l	CS92 - L50X40X5	2,231
S333	Vak6	CS88 - L50X40X5	2,571
S334	Vak6	CS88 - L50X40X5	1,250
S336	Vak6	CS84 - L100x100x6	2,080
S340	CrossArm1	CS144 - UNP160	8,015
S343	CrossArm5	CS12 - L50X5	0,800
S355	Vak6	CS82 - L130X12	4,280
S359	Vak10	CS90 - L100x100x6	4,356
S361	Vak11	CS124 - L80X6	0,970
S368	Vak8	CS143 - L130X12	3,331
S370	Vak10	CS90 - L100x100x6	4,356
S372	Vak11	CS124 - L80X6	0,970
S373	CrossArm6	CS133 - L80X6	6,823
S377	Vak8	CS141 - L120X80X8	2,030
S378	Vak8	CS141 - L120X80X8	2,206
S379	Vak8	CS141 - L120X80X8	2,030
S380	Vak8	CS141 - L120X80X8	2,205
S381	Vak8l	CS141 - L120X80X8	2,030
S382	Vak8l	CS141 - L120X80X8	2,206
S383	Vak8l	CS141 - L120X80X8	2,030
S384	Vak8l	CS141 - L120X80X8	2,205
S388	Vak9c	CS144 - UNP160	3,674
S390	Vak9a	CS144 - UNP160	1,840
S397	Vak7	CS92 - L50X40X5	2,227
S399	Vak8	CS36 - ISEA70/70/5	1,753
S400	Vak9b	CS95 - L75x75x6	2,456
S401	Vak8	CS93 - L70x70x5	2,366
S402	Vak8	CS143 - L130X12	3,331
S411	Vak10l	CS90 - L100x100x6	4,356
S413	Vak11l	CS124 - L80X6	0,970
S417	CrossArm5	CS133 - L80X6	6,823
S418	Vak6	CS82 - L130X12	4,280
S421	Vak8l	CS143 - L130X12	3,332
S425	Vak11l	CS124 - L80X6	0,970
S426	CrossArm5	CS133 - L80X6	6,823
S430	Vak7l	CS37 - HFLeq75x75x8	4,252
S441	Vak12a	CS101 - UNP120	1,970

D&C ENGINEERING	Project	150 kV lijn Leiden - Zoetermeer
	Onderdeel	Berekening Mast 52
	Omschrijving	Controle berekening
	Nationale norm	EC - EN
	Auteur	MG

Naam	Laag	Doorsnede	Lengte [m]
S446	Vak12d	CS101 - UNP120	1,970
S447	Vak12d	CS101 - UNP120	1,568
S448	CrossArm2	CS158 - L50X40X5	2,810
S449	CrossArm6	CS140 - L45X30X5	0,941
S450	Vak7	CS4 - L50X40X5	0,864
S453	Vak7	CS4 - L50X40X5	0,864
S456	Vak10	CS122 - L50X40X5	2,179
S457	Vak8	CS155 - HFLue120x80x8	1,544
S458	Vak7	CS92 - L50X40X5	2,231
S459	Vak7	CS92 - L50X40X5	2,231
S460	Vak6	CS84 - L100x100x6	2,080
S461	Vak9c	CS156 - L50X5	1,503
S462	Vak9c	CS156 - L50X5	1,503
S463	Vak9c	CS156 - L50X5	1,503
S464	Vak9c	CS156 - L50X5	1,503
S465	CrossArm2	CS95 - L75x75x6	1,719
S466	CrossArm1	CS95 - L75x75x6	2,269
S467	HorVerb2	CS78 - L110X10	5,000
S470	HorVerb2	CS113 - L80X6	5,000
S472	HorVerb2	CS78 - L110X10	5,000
S474	HorVerb2	CS113 - L80X6	5,000
S482	CrossArm5	CS21 - ISUA65/50/6	6,950
S483	CrossArm5	CS21 - ISUA65/50/6	6,950
S484	CrossArm6	CS21 - ISUA65/50/6	6,950
S485	CrossArm6	CS21 - ISUA65/50/6	6,950
S486	CrossArm6	CS133 - L80X6	6,823
S491	Vak9b	CS151 - HFLeq130x130x12	3,201
S492	Vak9a	CS144 - UNP160	1,720
S493	Vak9a	CS144 - UNP160	3,674
S495	Vak12d	CS101 - UNP120	1,970
S497	Vak12d	CS101 - UNP120	1,568
S503	Vak12d	CS97 - L100X8	2,721
S508	CrossArm3	CS30 - UNP140	0,800
S509	CrossArm3	CS36 - ISEA70/70/5	0,950
S510	CrossArm3	CS36 - ISEA70/70/5	0,950
S511	CrossArm4	CS30 - UNP140	0,800
S513	CrossArm4	CS36 - ISEA70/70/5	0,950
S514	CrossArm4	CS36 - ISEA70/70/5	0,950
S547	Vak9b	CS144 - UNP160	1,840
S548	CrossArm2	CS38 - HFLeq80x80x8	0,799
S549	CrossArm2	CS38 - HFLeq80x80x8	0,931
S550	CrossArm2	CS38 - HFLeq80x80x8	0,931
S551	CrossArm1	CS38 - HFLeq80x80x8	0,799
S552	CrossArm1	CS38 - HFLeq80x80x8	0,931
S553	CrossArm1	CS38 - HFLeq80x80x8	0,931
S588	Vak3	CS104 - L70X6	3,353
S589	Vak3	CS104 - L70X6	3,353
S590	Vak3	CS104 - L70X6	3,353
S591	Vak3	CS104 - L70X6	3,353
S592	Vak3	CS104 - L70X6	3,353
S593	Vak3	CS104 - L70X6	3,353
S594	Vak3	CS104 - L70X6	3,353
S595	Vak3	CS104 - L70X6	3,353
S596	CrossArm2	CS95 - L75x75x6	1,719
S597	CrossArm2	CS95 - L75x75x6	2,269
S598	CrossArm1	CS95 - L75x75x6	1,719
S599	CrossArm1	CS95 - L75x75x6	1,719
S600	CrossArm2	CS144 - UNP160	8,015
S601	Vak9b	CS144 - UNP160	1,720
S602	Vak6	CS160 - L150X14	5,642
S603	Vak6	CS160 - L150X14	5,642
S604	Vak6	CS160 - L150X14	5,642
S605	Vak6	CS160 - L150X14	5,642
S606	Vak6	CS88 - L50X40X5	1,250
S607	Vak6	CS88 - L50X40X5	1,250
S608	Vak6	CS88 - L50X40X5	1,250
S609	Vak6	CS88 - L50X40X5	1,250
S610	Vak6	CS83 - L100X75X7	4,765
S611	Vak6	CS82 - L130X12	4,280

Naam	Laag	Doorsnede	Lengte [m]
S612	Vak6	CS83 - L100X75X7	4,764
S613	Vak6	CS83 - L100X75X7	4,765
S614	Vak6	CS83 - L100X75X7	4,765
S615	Vak7l	CS89 - L130X12	4,261
S616	Vak7l	CS89 - L130X12	4,261
S617	Vak7	CS89 - L130X12	4,261
S618	Vak7	CS89 - L130X12	4,261
S619	Vak7	CS142 - L120X80X8	4,017
S620	Vak7l	CS142 - L120X80X8	4,017
S621	Vak7l	CS142 - L120X80X8	4,017
S622	Vak7	CS142 - L120X80X8	4,017
S623	Vak7l	CS161 - L120X80X8	4,747
S624	Vak7	CS161 - L120X80X8	4,747
S625	Vak7	CS161 - L120X80X8	4,747
S626	Vak10l	CS90 - L100x100x6	4,356
S627	Vak12a	CS97 - L100X8	2,720
S628	Vak12b	CS97 - L100X8	4,465
S629	Vak12c	CS97 - L100X8	4,464
S630	Vak12a	CS101 - UNP120	1,970
S631	Vak12b	CS101 - UNP120	4,465
S632	Vak12c	CS101 - UNP120	4,465
S633	Vak12c	CS101 - UNP120	4,465
S634	Vak12b	CS101 - UNP120	4,465
S635	Vak12a	CS97 - L100X8	2,720
S636	Vak12b	CS97 - L100X8	4,465
S637	Vak12c	CS97 - L100X8	4,464
S638	Vak9a	CS151 - HFLeq130x130x12	3,202
S639	Vak9c	CS151 - HFLeq130x130x12	3,680
S640	Vak9c	CS151 - HFLeq130x130x12	3,680
S641	Vak9a	CS151 - HFLeq130x130x12	3,202
S642	Vak9b	CS144 - UNP160	1,840
S643	Vak9b	CS144 - UNP160	1,720
S644	Vak9a	CS144 - UNP160	1,720
S645	Vak9a	CS144 - UNP160	1,840
S646	Vak8l	CS143 - L130X12	3,332
S647	CrossArm1	CS169 - RO10.2X1	0,000
SB1	Vak1	CS4 - L50X40X5	0,760
SB2	Vak1	CS4 - L50X40X5	0,760
SB3	Vak1	CS4 - L50X40X5	2,169
SB4	Vak1	CS4 - L50X40X5	2,169
SB17	Vak1	CS4 - L50X40X5	1,520
SB18	Vak1	CS4 - L50X40X5	1,520
SB19	Vak1	CS4 - L50X40X5	2,402
SB20	Vak1	CS4 - L50X40X5	2,402
SB33	Vak1	CS102 - L50X5	2,280
SB34	Vak1	CS102 - L50X5	2,280
SB35	Vak1	CS60 - L50X5	3,371
SB36	Vak1	CS60 - L50X5	3,371
SB49	Vak2	CS63 - L50X40X5	1,900
SB50	Vak2	CS65 - L50X40X5	2,621
SB51	Vak2	CS63 - L50X40X5	1,900
SB52	Vak2	CS65 - L50X40X5	2,621
SB53	Vak2	CS63 - L50X40X5	1,900
SB54	Vak2	CS65 - L50X40X5	2,621
SB55	Vak2	CS63 - L50X40X5	1,900
SB56	Vak2	CS65 - L50X40X5	2,621
SB57	Vak2	CS63 - L50X40X5	1,900
SB58	Vak2	CS65 - L50X40X5	2,621
SB59	Vak2	CS63 - L50X40X5	1,900
SB60	Vak2	CS65 - L50X40X5	2,621
SB61	Vak2	CS63 - L50X40X5	1,900
SB62	Vak2	CS65 - L50X40X5	2,621
SB63	Vak2	CS63 - L50X40X5	1,900
SB64	Vak2	CS65 - L50X40X5	2,621
SB65	Vak3	CS67 - L50X40X5	1,676
SB66	Vak3	CS67 - L50X40X5	1,676
SB67	Vak3	CS67 - L50X40X5	1,676
SB68	Vak3	CS67 - L50X40X5	1,676
SB69	Vak3	CS67 - L50X40X5	1,676

D&C ENGINEERING	Project	150 kV lijn Leiden - Zoetermeer
	Onderdeel	Berekening Mast 52
	Omschrijving	Controle berekening
	Nationale norm	EC - EN
	Auteur	MG

Naam	Laag	Doorsnede	Lengte [m]
SB70	Vak3	CS67 - L50X40X5	1,676
SB71	Vak3	CS67 - L50X40X5	1,676
SB72	Vak3	CS67 - L50X40X5	1,676
SB73	Vak3	CS66 - L50X40X5	2,356
SB74	Vak3	CS66 - L50X40X5	2,356
SB75	Vak3	CS66 - L50X40X5	2,356
SB76	Vak3	CS66 - L50X40X5	2,356
SB77	Vak3	CS66 - L50X40X5	2,356
SB78	Vak3	CS66 - L50X40X5	2,356
SB79	Vak3	CS66 - L50X40X5	2,356
SB80	Vak3	CS66 - L50X40X5	2,356
SB81	Vak3	CS66 - L50X40X5	2,360
SB82	Vak3	CS67 - L50X40X5	1,676
SB83	Vak3	CS66 - L50X40X5	2,360
SB84	Vak3	CS67 - L50X40X5	1,676
SB85	Vak3	CS66 - L50X40X5	2,360
SB86	Vak3	CS67 - L50X40X5	1,676
SB87	Vak3	CS66 - L50X40X5	2,360
SB88	Vak3	CS67 - L50X40X5	1,676
SB89	Vak3	CS66 - L50X40X5	2,360
SB90	Vak3	CS67 - L50X40X5	1,676
SB91	Vak3	CS66 - L50X40X5	2,360
SB92	Vak3	CS67 - L50X40X5	1,676
SB93	Vak3	CS66 - L50X40X5	2,360
SB94	Vak3	CS67 - L50X40X5	1,676
SB95	Vak3	CS66 - L50X40X5	2,360
SB96	Vak3	CS67 - L50X40X5	1,676
SB97	Vak4	CS69 - L50X40X5	1,460
SB98	Vak4	CS69 - L50X40X5	1,460
SB99	Vak4	CS69 - L50X40X5	1,460
SB100	Vak4	CS69 - L50X40X5	1,460
SB101	Vak4	CS69 - L50X40X5	1,460
SB102	Vak4	CS69 - L50X40X5	1,460
SB103	Vak4	CS69 - L50X40X5	1,460
SB104	Vak4	CS69 - L50X40X5	1,460
SB105	Vak4	CS71 - L50X40X5	2,231
SB106	Vak4	CS71 - L50X40X5	2,231
SB107	Vak4	CS71 - L50X40X5	2,231
SB108	Vak4	CS71 - L50X40X5	2,231
SB109	Vak4	CS71 - L50X40X5	2,231
SB110	Vak4	CS71 - L50X40X5	2,231
SB111	Vak4	CS71 - L50X40X5	2,231
SB112	Vak4	CS71 - L50X40X5	2,231
SB113	Vak4	CS71 - L50X40X5	2,190
SB114	Vak4	CS69 - L50X40X5	1,460
SB115	Vak4	CS71 - L50X40X5	2,190
SB116	Vak4	CS69 - L50X40X5	1,460
SB117	Vak4	CS71 - L50X40X5	2,190
SB118	Vak4	CS69 - L50X40X5	1,460
SB119	Vak4	CS71 - L50X40X5	2,190
SB120	Vak4	CS69 - L50X40X5	1,460
SB121	Vak4	CS71 - L50X40X5	2,190
SB122	Vak4	CS69 - L50X40X5	1,460
SB123	Vak4	CS71 - L50X40X5	2,190
SB124	Vak4	CS69 - L50X40X5	1,460
SB125	Vak4	CS71 - L50X40X5	2,190
SB126	Vak4	CS69 - L50X40X5	1,460
SB127	Vak4	CS71 - L50X40X5	2,190
SB128	Vak4	CS69 - L50X40X5	1,460
SB129	Vak5	CS20 - L50X40X5	1,250
SB130	Vak5	CS72 - L50X40X5	2,050
SB131	Vak5	CS20 - L50X40X5	1,250
SB132	Vak5	CS72 - L50X40X5	2,050
SB133	Vak5	CS20 - L50X40X5	1,250

Naam	Laag	Doorsnede	Lengte [m]
SB134	Vak5	CS72 - L50X40X5	2,049
SB135	Vak5	CS20 - L50X40X5	1,250
SB136	Vak5	CS72 - L50X40X5	2,050
SB137	Vak5	CS20 - L50X40X5	1,250
SB138	Vak5	CS72 - L50X40X5	2,050
SB139	Vak5	CS20 - L50X40X5	1,250
SB140	Vak5	CS72 - L50X40X5	2,050
SB141	Vak5	CS20 - L50X40X5	1,250
SB142	Vak5	CS72 - L50X40X5	2,050
SB143	Vak5	CS20 - L50X40X5	1,250
SB144	Vak5	CS72 - L50X40X5	2,050
SB145	Vak1	CS61 - L60X6	3,040
SB146	Vak1	CS61 - L60X6	3,040
SB147	Vak1	CS4 - L50X40X5	2,827
SB148	Vak1	CS4 - L50X40X5	2,827
SB149	Vak1	CS60 - L50X5	3,371
SB150	Vak1	CS61 - L60X6	3,040
SB151	Vak1	CS102 - L50X5	2,280
SB152	Vak1	CS4 - L50X40X5	2,827
SB153	Vak1	CS4 - L50X40X5	2,402
SB154	Vak1	CS4 - L50X40X5	2,169
SB155	Vak1	CS4 - L50X40X5	1,520
SB156	Vak1	CS4 - L50X40X5	0,760
SB157	Vak1	CS4 - L50X40X5	0,760
SB158	Vak1	CS4 - L50X40X5	1,520
SB159	Vak1	CS4 - L50X40X5	2,169
SB160	Vak1	CS102 - L50X5	2,280
SB161	Vak1	CS4 - L50X40X5	2,402
SB162	Vak1	CS61 - L60X6	3,040
SB163	Vak1	CS4 - L50X40X5	2,827
SB164	Vak1	CS60 - L50X5	3,371
SB165	Vak1	CS60 - L50X5	3,371
SB166	Vak1	CS61 - L60X6	3,040
SB167	Vak1	CS102 - L50X5	2,280
SB168	Vak1	CS4 - L50X40X5	2,827
SB169	Vak1	CS4 - L50X40X5	2,402
SB170	Vak1	CS4 - L50X40X5	2,169
SB171	Vak1	CS4 - L50X40X5	1,520
SB172	Vak1	CS4 - L50X40X5	0,760
SB173	Vak1	CS4 - L50X40X5	0,760
SB174	Vak1	CS4 - L50X40X5	1,520
SB175	Vak1	CS4 - L50X40X5	2,169
SB176	Vak1	CS102 - L50X5	2,280
SB177	Vak1	CS4 - L50X40X5	2,402
SB178	Vak1	CS61 - L60X6	3,040
SB179	Vak1	CS4 - L50X40X5	2,827
SB180	Vak1	CS60 - L50X5	3,371
SB181	Vak1	CS60 - L50X5	3,371
SB182	Vak1	CS61 - L60X6	3,040
SB183	Vak1	CS102 - L50X5	2,280
SB184	Vak1	CS4 - L50X40X5	2,827
SB185	Vak1	CS4 - L50X40X5	2,402
SB186	Vak1	CS4 - L50X40X5	2,169
SB187	Vak1	CS4 - L50X40X5	1,520
SB188	Vak1	CS4 - L50X40X5	0,760
SB189	Vak1	CS4 - L50X40X5	0,760
SB190	Vak1	CS4 - L50X40X5	1,520
SB191	Vak1	CS4 - L50X40X5	2,169
SB192	Vak1	CS102 - L50X5	2,280
SB193	Vak1	CS4 - L50X40X5	2,402
SB194	Vak1	CS61 - L60X6	3,040
SB195	Vak1	CS4 - L50X40X5	2,827
SB196	Vak1	CS60 - L50X5	3,371

6. Staafnummers mastlichaam

6.1. Vak 1

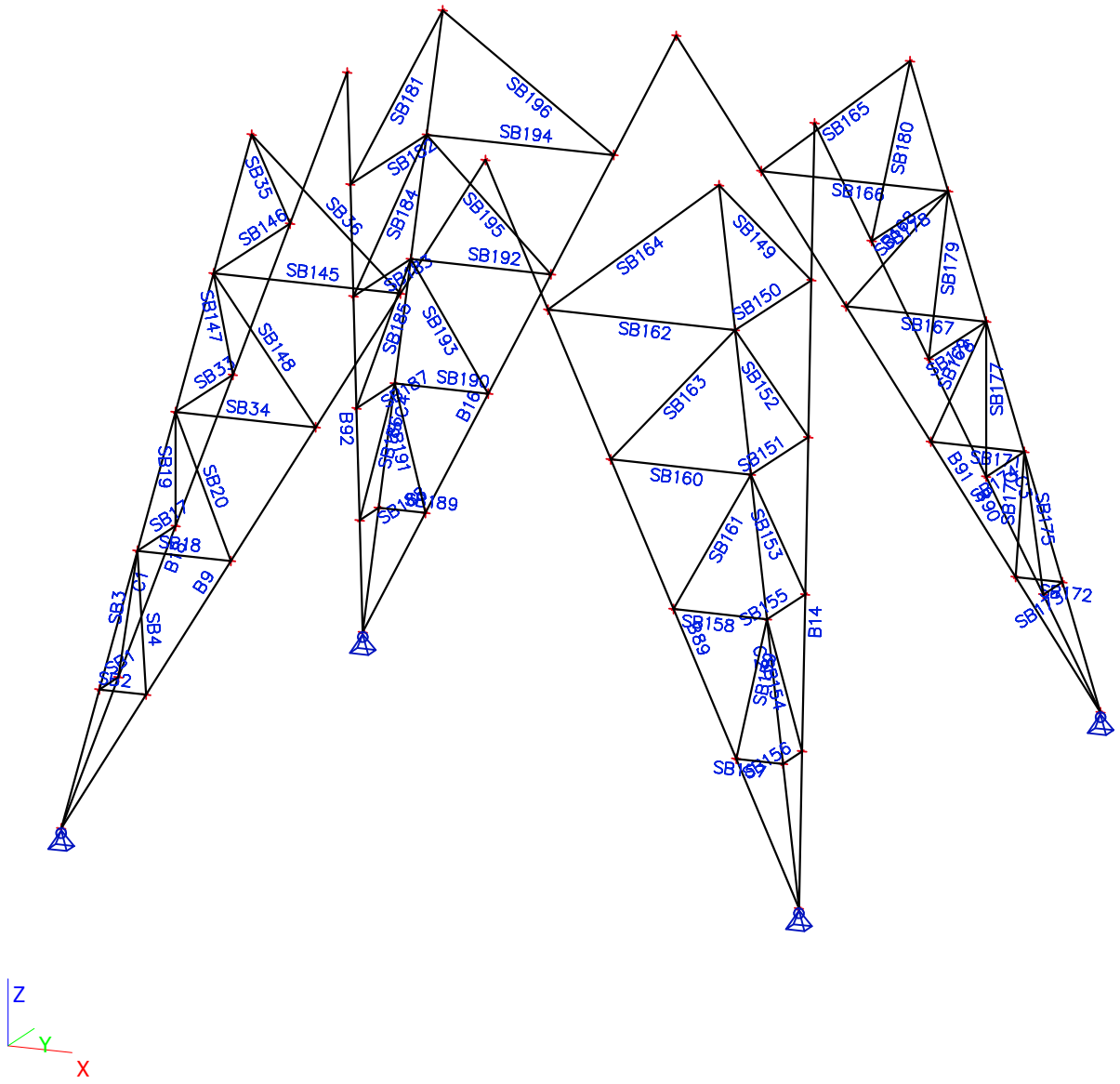

6.2. Vak 2 en 3

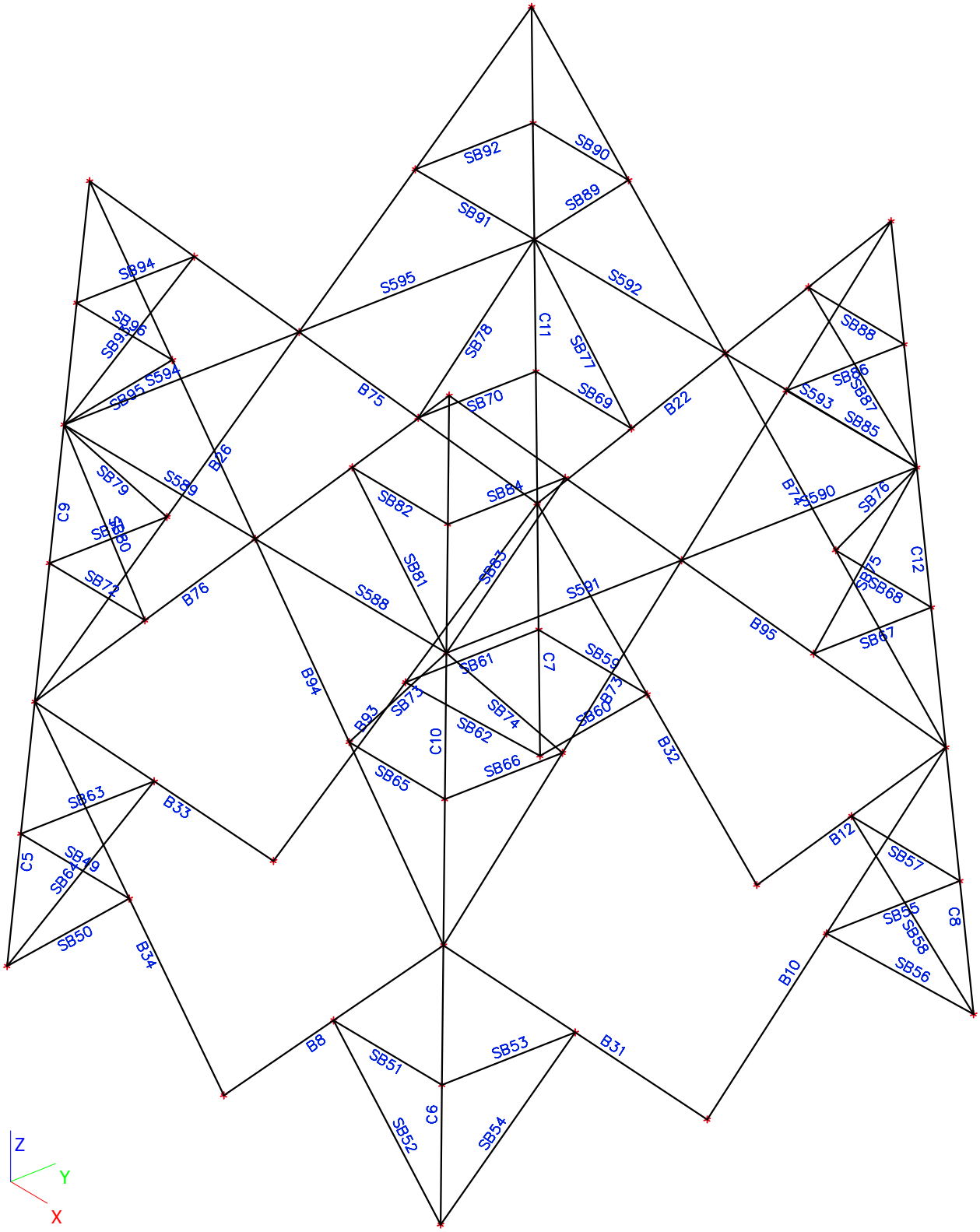
SB92
SB90
SB91
SB89
SB94
S595
S592
SB96
SB93
SB78
C11
SB77
SB88
SB95
S594
B75
SB70
SB69
B22
SB86
SB87
S593
SB85
B26
SB79
S589
SB82
SB84
B74
S590
SB76
C9
SB80
SB81
SB83
C12
SB72
B76
S588
S591
SB68
B95
SB67
SB61
C7
SB59
B94
SB73
SB74
SB60
B73
B93
C10
SB62
B32
SB65
SB66
SB63
B33
B12
SB57
C5
SB49
SB64
SB55
SB58
C8
SB50
B34
B10
SB56
B8
SB51
SB53
B31
C6
SB52
SB54
Z
Y
X

6.3. Vak 4 en 5

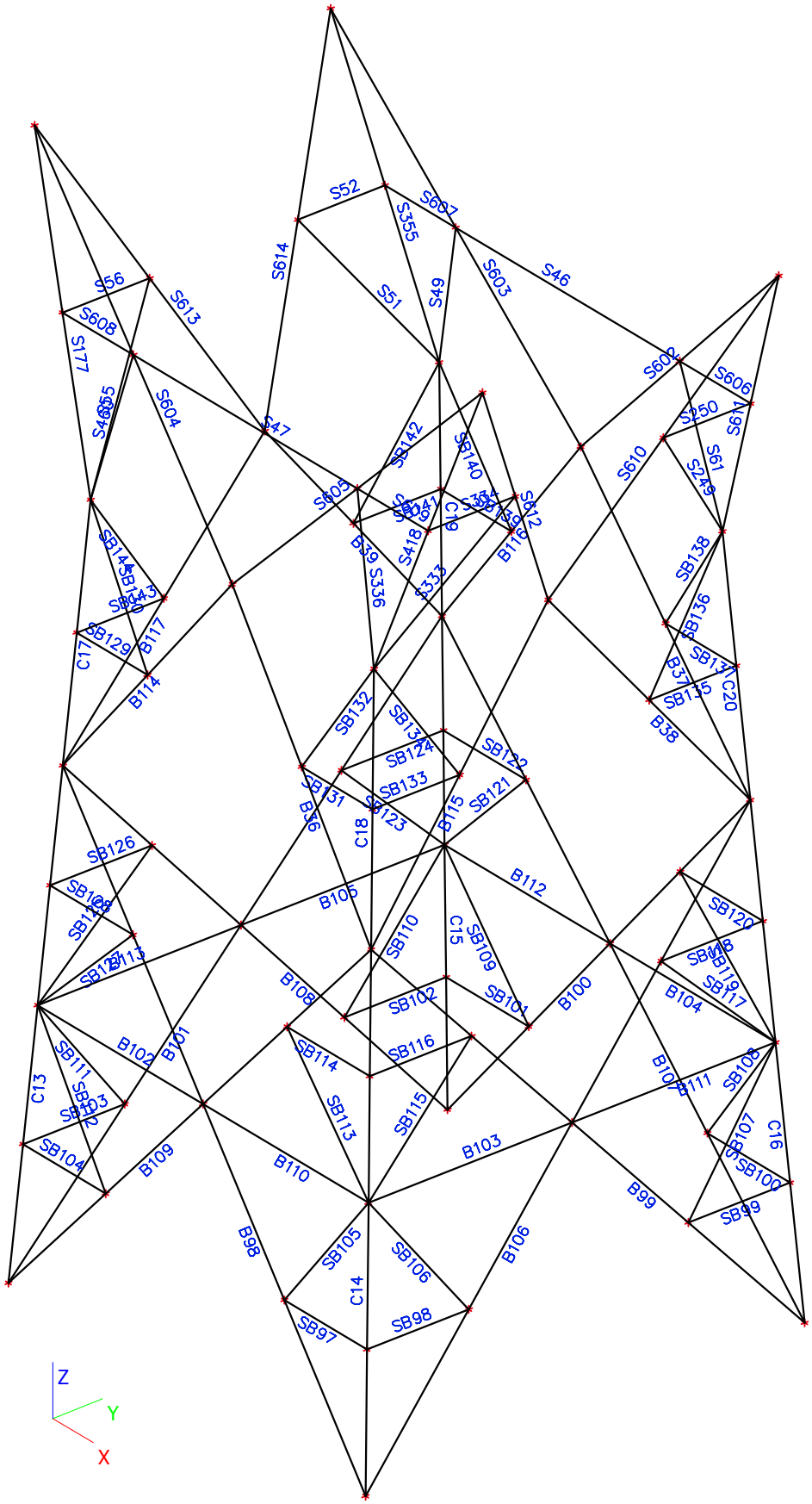
S52
S687
S355
S614
S51
S49
S603
S46
S56
S613
S608
S177
S604
S47
S609
S606
S250
S610
S61
S249
S142
S140
S605
S612
S418
S336
S333
B39
B119
S138
S136
S137
B37
B115
C20
B38
S143
S129
B117
C17
B114
SB132
SB131
SB124
SB133
SB123
SB122
SB121
B36
C18
B115
B112
B105
SB126
SB110
C15
SB109
SB120
SB118
B119
SB117
B104
B108
SB102
SB101
B100
B102
B101
SB116
SB114
SB113
SB115
B103
B111
SB108
SB107
C16
SB100
SB99
C13
SB111
SB104
B109
B110
B99
B98
SB105
SB106
B106
C14
SB97
SB98
Z
Y
X

6.4. Vak 6 en 7

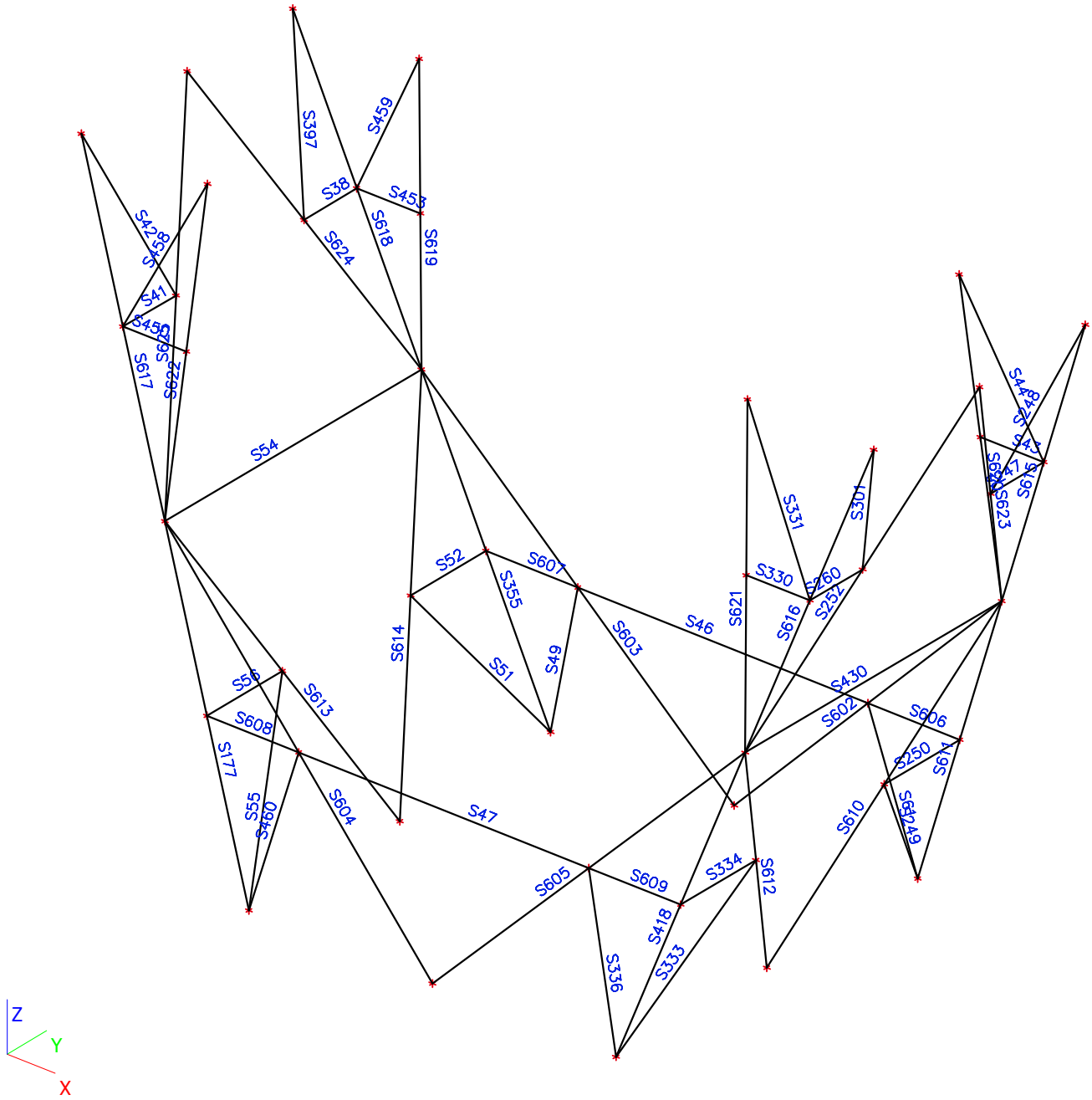
S397
S459
S38
S454
S618
S619
S624
S4228
S41
S617
S622
S54
S52
S607
S355
S614
S51
S49
S603
S46
S621
S331
S301
S330
S260
S252
S616
S430
S602
S606
S613
S608
S177
S55
S460
S604
S47
S605
S609
S334
S612
S418
S333
S336
S610
S249
S250
S611
S448
S623
S615

6.5. Vak 8 links en rechts

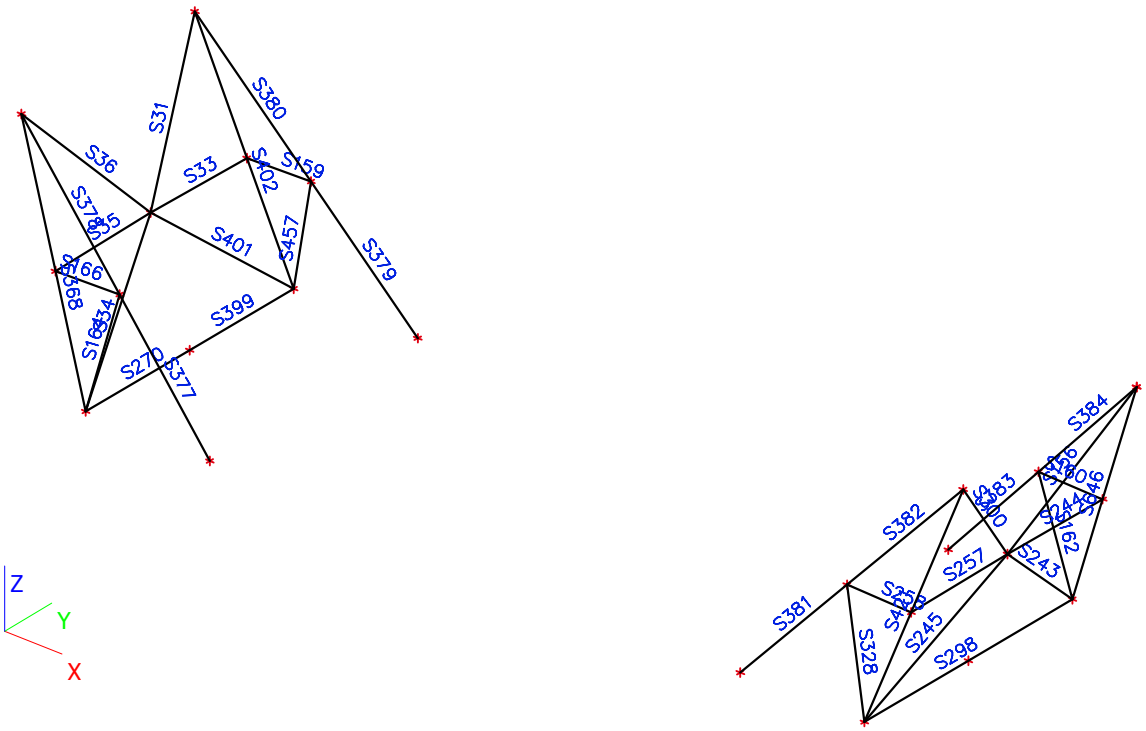

6.6. Vak 9

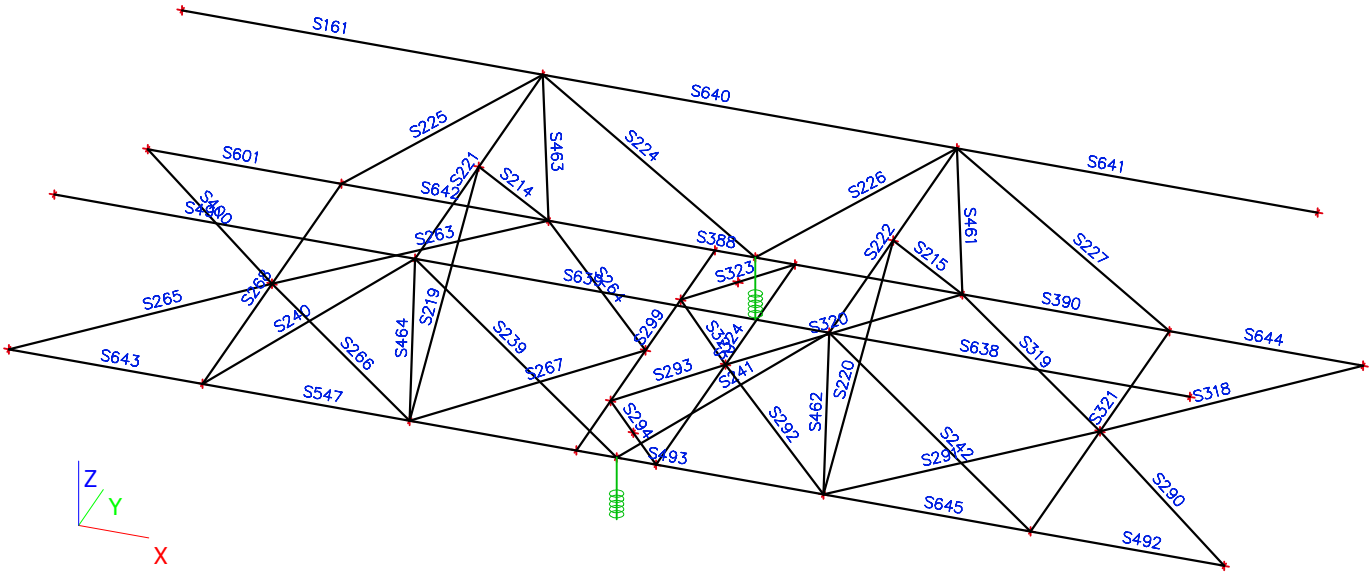

6.7. Vak 10 en 11 - rechts

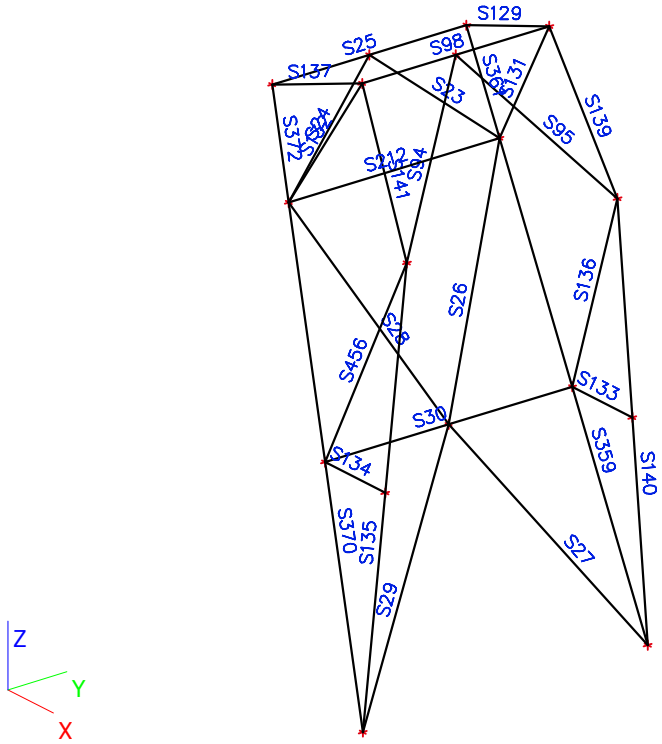

6.8. Vak 10l en 11l - links

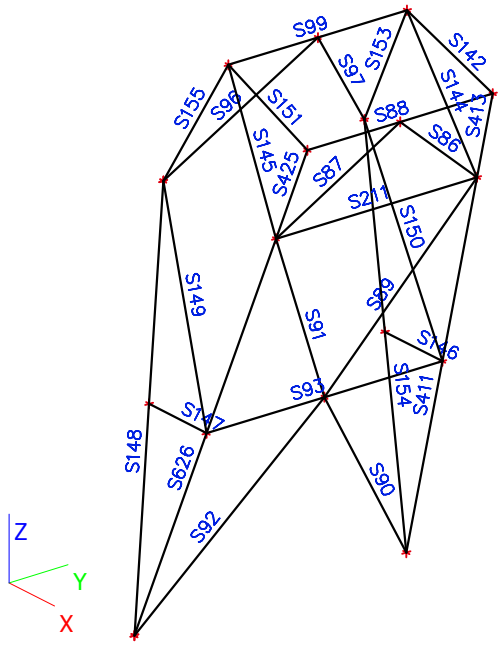

6.9. Vak 12 a,12b,

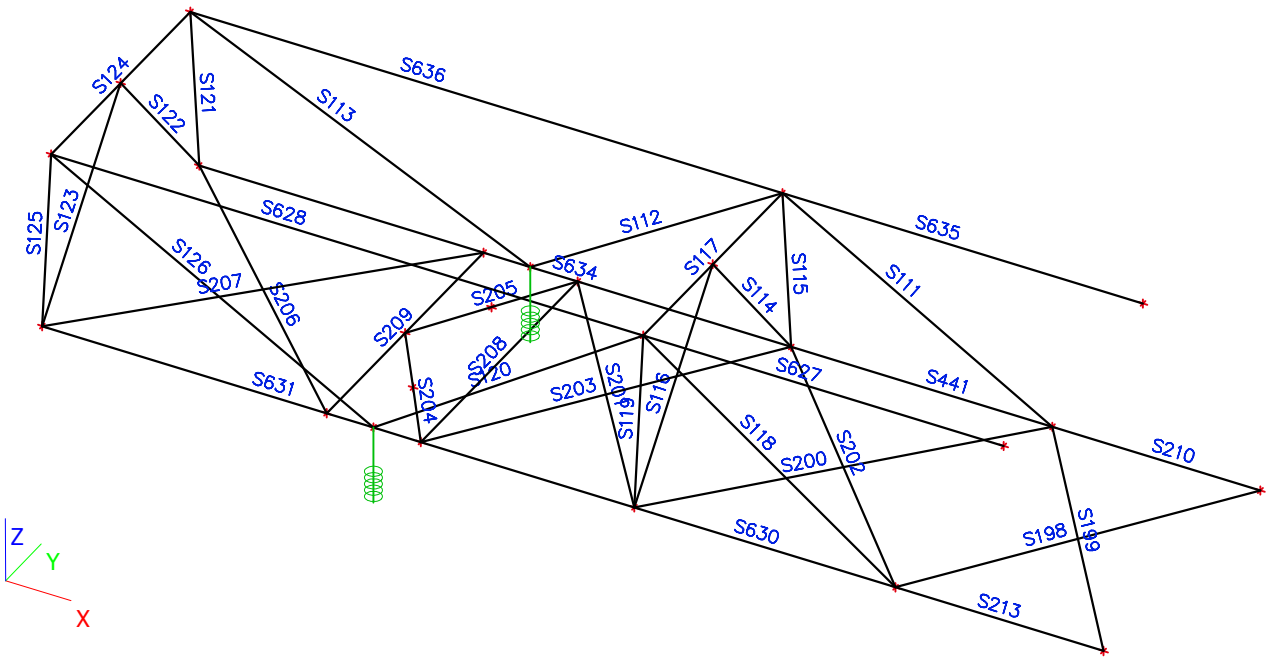

6.10. Vak 12a, 12b,

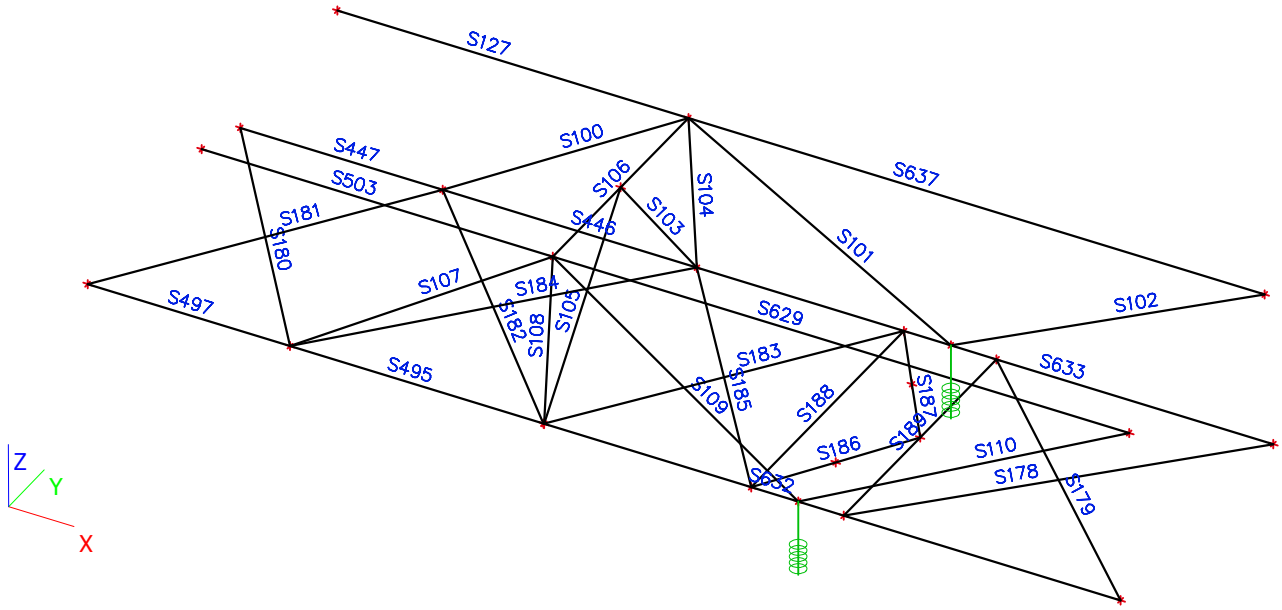

7. Staafnummers traverses

7.1. Traverse 1

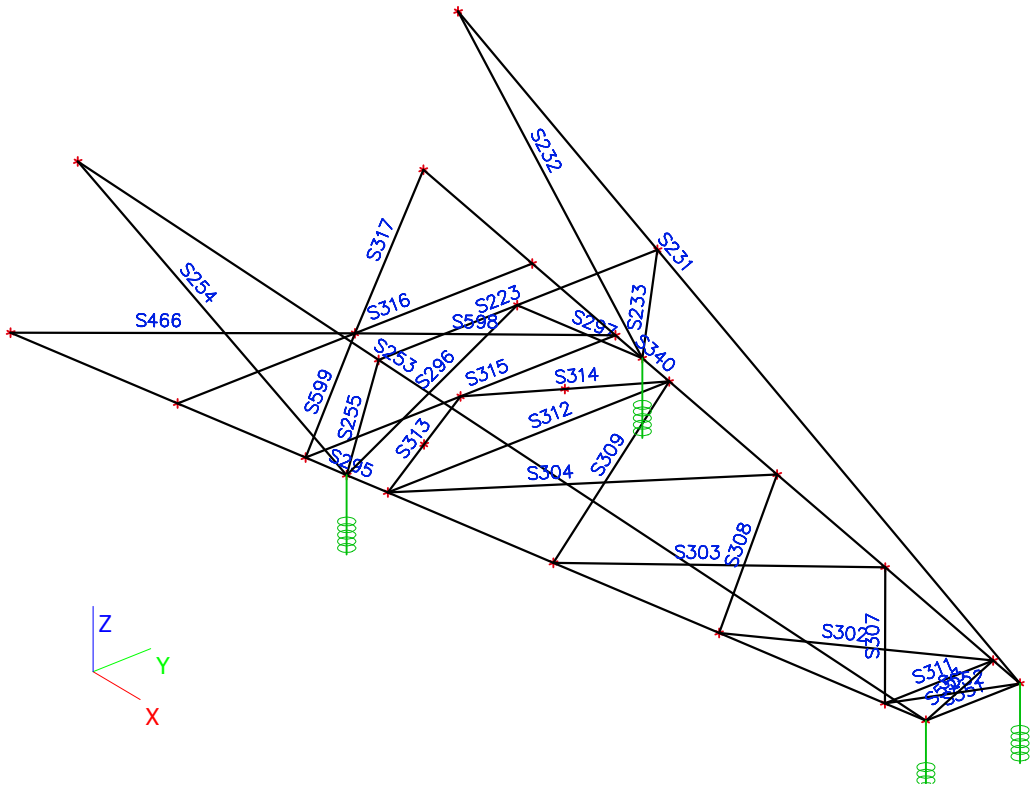

7.2. Traverse 2

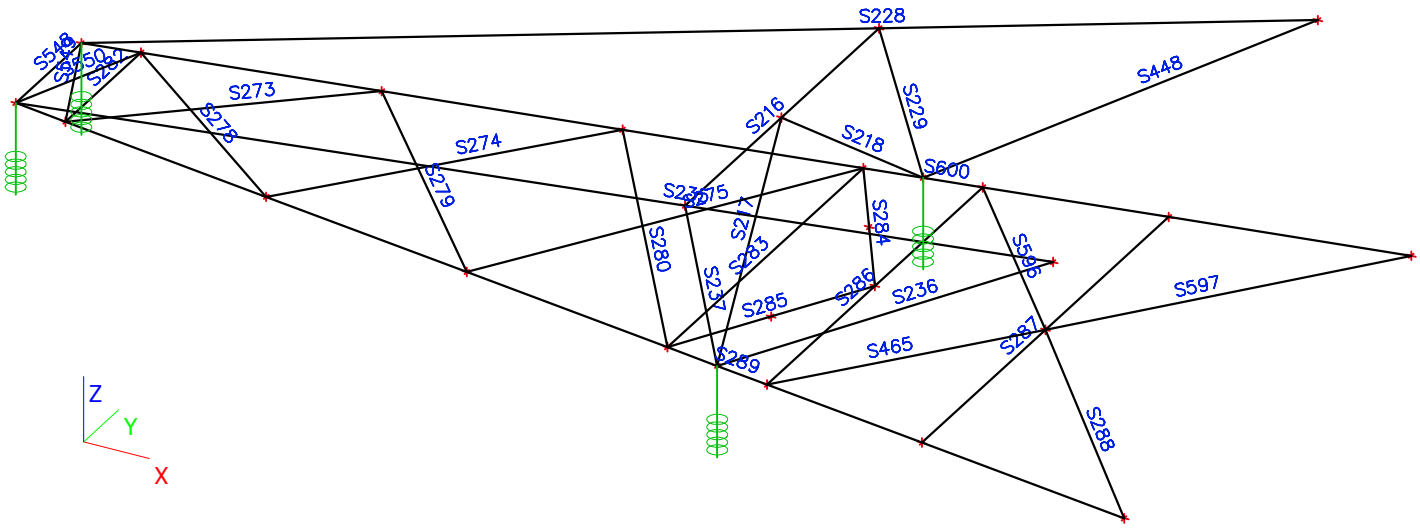

7.3. Traverse 3

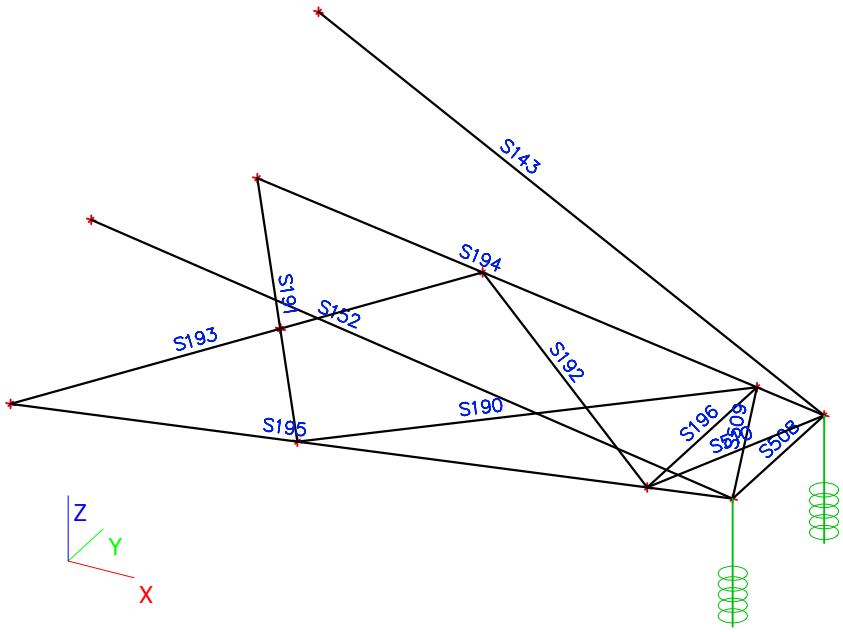

7.4. Traverse 4

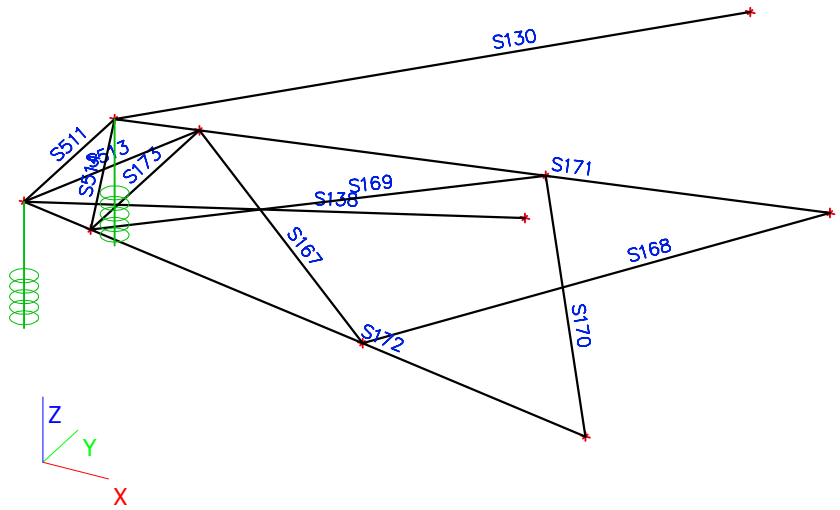

7.5. Traverse 5

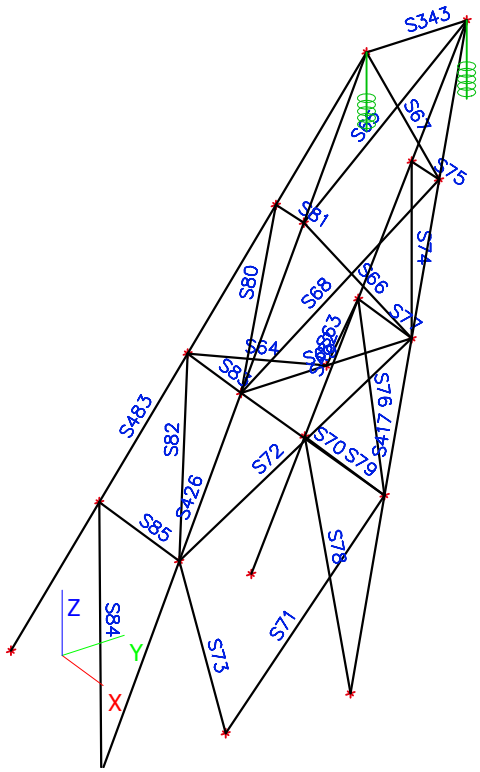

7.6. Traverse 6

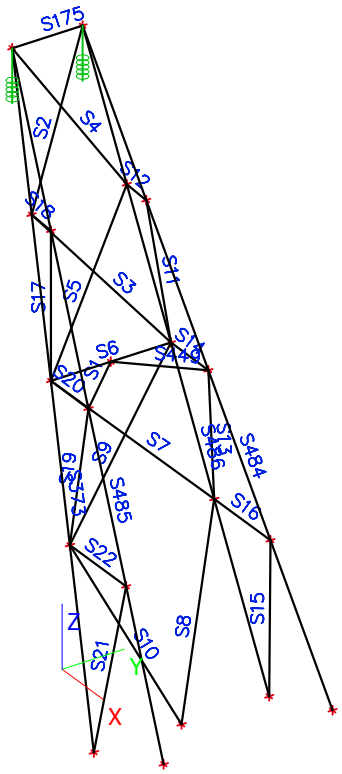

8. Staafnummers horizontale verbanden

8.1. Horizontaal verband 1

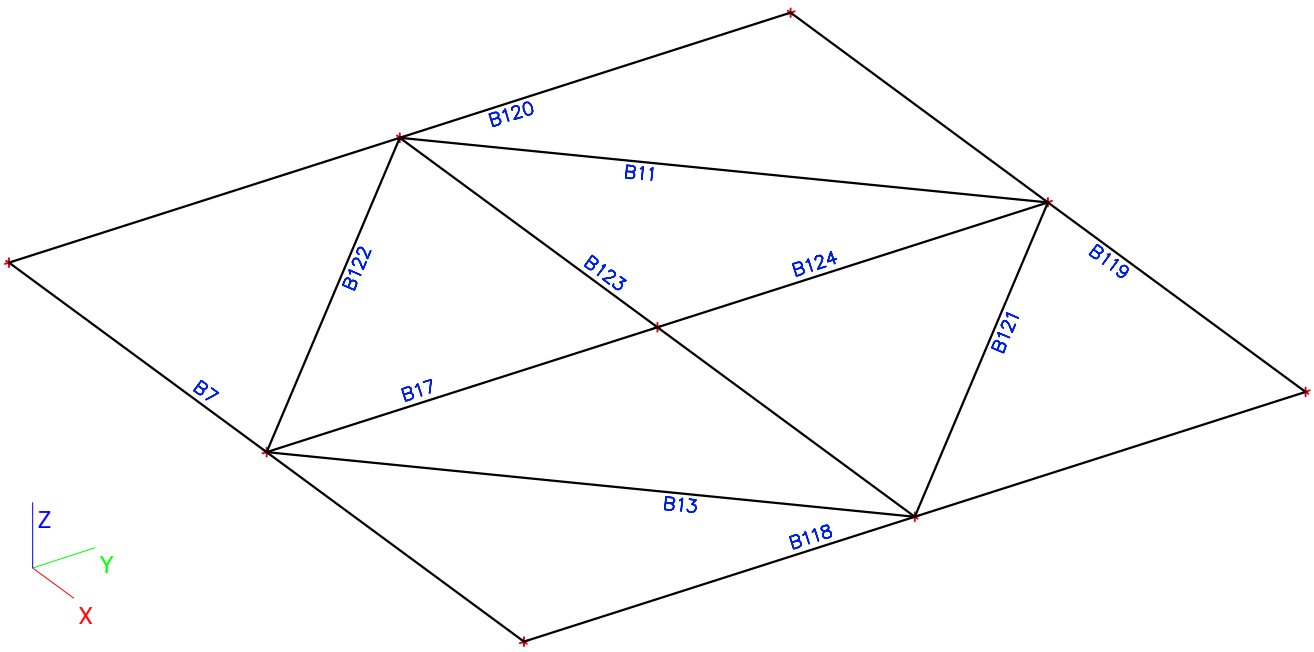

8.2. Horizontaal verband 2

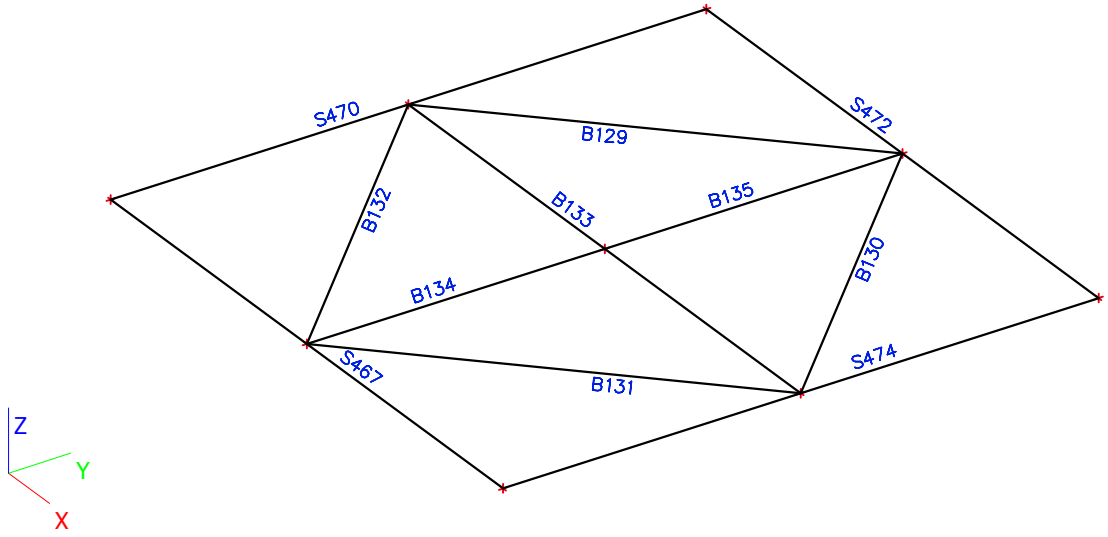

9. Belastingsgevallen

Naam	Omschrijving	Actie type	Lastgroep	Belastingtype	Spec	Richting
6T	self weight of tower	Permanent	Perm	Eigen gewicht		-Z
6C	self weight of conductor	Permanent	Perm	Standaard		
W_x-y+	Wind	Variabel	LTA WIND	Statisch	Standaard	
W_x+y-	Wind	Variabel	LTA WIND	Statisch	Standaard	
W_x-y-	Wind	Variabel	LTA WIND	Statisch	Standaard	
W_x+y+	Wind	Variabel	LTA WIND	Statisch	Standaard	
W_y-	Wind	Variabel	LTA WIND	Statisch	Standaard	
W_y+	Wind	Variabel	LTA WIND	Statisch	Standaard	
W_x-	Wind	Variabel	LTA WIND	Statisch	Standaard	
W_x+	Wind	Variabel	LTA WIND	Statisch	Standaard	
WI_x+	Wind on tower and iced conductor line	Variabel	WindIce	Statisch	Standaard	
WI_x-	Wind on tower and iced conductor line	Variabel	WindIce	Statisch	Standaard	
WI_x+y+	Wind on tower and iced conductor line	Variabel	WindIce	Statisch	Standaard	
WI_x-y+	Wind on tower and iced conductor line	Variabel	WindIce	Statisch	Standaard	
WI_x+y-	Wind on tower and iced conductor line	Variabel	WindIce	Statisch	Standaard	
WI_x-y-	Wind on tower and iced conductor line	Variabel	WindIce	Statisch	Standaard	
WI_y+	Wind on tower and iced conductor line	Variabel	WindIce	Statisch	Standaard	
WI_y-	Wind on tower and iced conductor line	Variabel	WindIce	Statisch	Standaard	
Ice	IJs	Variabel	Ice	Statisch	Standaard	
4M	Maintenance	Variabel	Maint	Statisch	Onderhoudslasten	
4C0	Construction	Variabel	Construction	Statisch	Standaard	
4C1	Construction	Variabel	Construction	Statisch	Standaard	
4C2	Construction	Variabel	Construction	Statisch	Standaard	
4C3	Construction	Variabel	Construction	Statisch	Standaard	
4C4	Construction	Variabel	Construction	Statisch	Standaard	
4C5	Construction	Variabel	Construction	Statisch	Standaard	
4C6	Construction	Variabel	Construction	Statisch	Standaard	
4C7	Construction	Variabel	Construction	Statisch	Standaard	
4C8	Construction	Variabel	Construction	Statisch	Standaard	
4C9	Construction	Variabel	Construction	Statisch	Standaard	
4C10	Construction	Variabel	Construction	Statisch	Standaard	
4C11	Construction	Variabel	Construction	Statisch	Standaard	
SBS	SBS-load	Variabel	SBS	Statisch	Knikverkorterlasten	
Tuls-1a	Conductor tension	Permanent	Perm	Standaard		
Tuls-1b	Conductor tension	Permanent	Perm	Standaard		
Tuls-3	Conductor tension	Permanent	Perm	Standaard		
Tuls-4	Conductor tension	Permanent	Perm	Standaard		
Tuls-6	Conductor tension	Permanent	Perm	Standaard		
Tuls-5a_CI1	Conductor tension	Variabel	5a_CI	Statisch	Standaard	
Tuls-5a_CI2	Conductor tension	Variabel	5a_CI	Statisch	Standaard	
Tuls-5a_CI3	Conductor tension	Variabel	5a_CI	Statisch	Standaard	
Tuls-5a_CI4	Conductor tension	Variabel	5a_CI	Statisch	Standaard	
Tuls-5a_CI5	Conductor tension	Variabel	5a_CI	Statisch	Standaard	
Tuls-5a_CI6	Conductor tension	Variabel	5a_CI	Statisch	Standaard	
Tuls-5a_CI7	Conductor tension	Variabel	5a_CI	Statisch	Standaard	
Tuls-5a_CI8	Conductor tension	Variabel	5a_CI	Statisch	Standaard	
Tuls-5a_CI9	Conductor tension	Variabel	5a_CI	Statisch	Standaard	
Tuls-5a_CI10	Conductor tension	Variabel	5a_CI	Statisch	Standaard	
Tuls-5a_CI11	Conductor tension	Variabel	5a_CI	Statisch	Standaard	
Tuls-5a_CI12	Conductor tension	Variabel	5a_CI	Statisch	Standaard	
Tuls-5a_CI13	Conductor tension	Variabel	5a_CI	Statisch	Standaard	
Tuls-5a_CI14	Conductor tension	Variabel	5a_CI	Statisch	Standaard	
Tuls-5a_CI15	Conductor tension	Variabel	5a_CI	Statisch	Standaard	
Tuls-5a_CI16	Conductor tension	Variabel	5a_CI	Statisch	Standaard	
Tuls-5a_CI17	Conductor tension	Variabel	5a_CI	Statisch	Standaard	
Tuls-5a_CI18	Conductor tension	Variabel	5a_CI	Statisch	Standaard	
Tuls-5a_CI19	Conductor tension	Variabel	5a_CI	Statisch	Standaard	
Tuls-5a_CI20	Conductor tension	Variabel	5a_CI	Statisch	Standaard	
Tuls-5a_CI21	Conductor tension	Variabel	5a_CI	Statisch	Standaard	
Tuls-5a_CI22	Conductor tension	Variabel	5a_CI	Statisch	Standaard	

10. Combinaties

Naam	Omschrijving	Type	Belastingsgevallen	Coëff. [-]
1a	wind;10	Omhullende -	W_x-y+ - Wind	1,50
			W_x+y- - Wind	1,50

D&C ENGINEERING	Project	150 kV lijn Leiden - Zoetermeer
	Onderdeel	Berekening Mast 52
	Omschrijving	Controle berekening
	Nationale norm	EC - EN
	Auteur	MG

Naam	Omschrijving	Type	Belastingsgevallen	Coëff. [-]
1a	wind;10	Omhullende - uiterst	W_x-y- - Wind	1,50
			W_x+y+ - Wind	1,50
			W_y- - Wind	1,50
			W_y+ - Wind	1,50
			W_x- - Wind	1,50
			W_x+ - Wind	1,50
			6T - self weight of tower	1,44
			6C - self weight of conductor	1,20
			Tuls-1a - Conductor tension	1,00
1a-p	wind;10	Omhullende - uiterst	W_x-y+ - Wind	1,50
			W_x+y- - Wind	1,50
			W_x-y- - Wind	1,50
			W_x+y+ - Wind	1,50
			W_y- - Wind	1,50
			W_y+ - Wind	1,50
			W_x- - Wind	1,50
			W_x+ - Wind	1,50
			6T - self weight of tower	1,08
			6C - self weight of conductor	0,90
			Tuls-1a - Conductor tension	1,00
1b	wind;-20	Omhullende - uiterst	W_x-y+ - Wind	0,30
			W_x+y- - Wind	0,30
			W_x-y- - Wind	0,30
			W_x+y+ - Wind	0,30
			W_y- - Wind	0,30
			W_y+ - Wind	0,30
			W_x- - Wind	0,30
			W_x+ - Wind	0,30
			6T - self weight of tower	1,44
			6C - self weight of conductor	1,20
			Tuls-1b - Conductor tension	1,00
1b-p	wind;-20	Omhullende - uiterst	W_x-y+ - Wind	0,30
			W_x+y- - Wind	0,30
			W_x-y- - Wind	0,30
			W_x+y+ - Wind	0,30
			W_y- - Wind	0,30
			W_y+ - Wind	0,30
			W_x- - Wind	0,30
			W_x+ - Wind	0,30
			6T - self weight of tower	1,08
			6C - self weight of conductor	0,90
			Tuls-1b - Conductor tension	1,00
3	wind+ice	Omhullende - uiterst	Ice - IJs	1,50
			WI_x+ - Wind on tower and iced conductor line	0,45
			WI_x- - Wind on tower and iced conductor line	0,45
			WI_x+y+ - Wind on tower and iced conductor line	0,45
			WI_x+y- - Wind on tower and iced conductor line	0,45
			WI_x-y+ - Wind on tower and iced conductor line	0,45
			WI_x-y- - Wind on tower and iced conductor line	0,45
			WI_y+ - Wind on tower and iced conductor line	0,45
			WI_y- - Wind on tower and iced conductor line	0,45
			6T - self weight of tower	1,44
			6C - self weight of conductor	1,20
			Tuls-3 - Conductor tension	1,00
3-p	wind+ice	Omhullende -	Ice - IJs	1,50
			WI_x+ - Wind on tower and iced conductor line	0,45
			WI_x- - Wind on tower and iced conductor line	0,45
			WI_x+y+ - Wind on tower and iced conductor line	0,45
			WI_x+y- - Wind on tower and iced conductor line	0,45
			WI_x-y+ - Wind on tower and iced conductor line	0,45
			WI_x-y- - Wind on tower and iced conductor line	0,45
			WI_y+ - Wind on tower and iced conductor line	0,45
			WI_y- - Wind on tower and iced conductor line	0,45
			6T - self weight of tower	1,08
			6C - self weight of conductor	0,90

D&C ENGINEERING	Project	150 kV lijn Leiden - Zoetermeer
	Onderdeel	Berekening Mast 52
	Omschrijving	Controle berekening
	Nationale norm	EC - EN
	Auteur	MG

Naam	Omschrijving	Type	Belastingsgevallen	Coëff. [-]
3-p	wind+ice	Omhullende - uiterst	Tuls-3 - Conductor tension	1,00
4	maintenance	Omhullende - uiterst	W_x-y+ - Wind	0,30
			W_x+y- - Wind	0,30
			W_x-y- - Wind	0,30
			W_x+y+ - Wind	0,30
			W_y- - Wind	0,30
			W_y+ - Wind	0,30
			W_x- - Wind	0,30
			W_x+ - Wind	0,30
			6T - self weight of tower	1,44
			6C - self weight of conductor	1,20
			Tuls-4 - Conductor tension	1,00
			4C0 - Construction	1,50
			4C1 - Construction	1,50
			4C2 - Construction	1,50
			4C3 - Construction	1,50
			4C4 - Construction	1,50
			4C5 - Construction	1,50
			4C6 - Construction	1,50
			4C7 - Construction	1,50
			4C8 - Construction	1,50
			4C9 - Construction	1,50
			4C10 - Construction	1,50
			4C11 - Construction	1,50
4-p	maintenance	Omhullende - uiterst	W_x-y+ - Wind	0,30
			W_x+y- - Wind	0,30
			W_x-y- - Wind	0,30
			W_x+y+ - Wind	0,30
			W_y- - Wind	0,30
			W_y+ - Wind	0,30
			W_x- - Wind	0,30
			W_x+ - Wind	0,30
			6T - self weight of tower	1,08
			6C - self weight of conductor	0,90
			Tuls-4 - Conductor tension	1,00
			4C0 - Construction	1,50
			4C1 - Construction	1,50
			4C2 - Construction	1,50
			4C3 - Construction	1,50
			4C4 - Construction	1,50
			4C5 - Construction	1,50
			4C6 - Construction	1,50
			4C7 - Construction	1,50
			4C8 - Construction	1,50
			4C9 - Construction	1,50
			4C10 - Construction	1,50
			4C11 - Construction	1,50
6	permanent	Omhullende - uiterst	6T - self weight of tower	1,35
			6C - self weight of conductor	1,35
			Tuls-6 - Conductor tension	1,00
5a1	safety	Omhullende -	6T - self weight of tower	1,20
			6C - self weight of conductor	1,00
			Tuls-6 - Conductor tension	1,00
			4C0 - Construction	1,00
			4C1 - Construction	1,00
			4C2 - Construction	1,00
			4C3 - Construction	1,00
			4C4 - Construction	1,00
			4C5 - Construction	1,00
			4C6 - Construction	1,00
			4C7 - Construction	1,00
			4C8 - Construction	1,00
			4C9 - Construction	1,00
			4C10 - Construction	1,00
			Tuls-5a_CI2 - Conductor tension	0,80

D&C ENGINEERING	Project	150 kV lijn Leiden - Zoetermeer
	Onderdeel	Berekening Mast 52
	Omschrijving	Controle berekening
	Nationale norm	EC - EN
	Auteur	MG

Naam	Omschrijving	Type	Belastingsgevallen	Coëff. [-]
5a1	safety	Omhullende - uiterst	Tuls-5a_CI3 - Conductor tension	1,00
			Tuls-5a_CI5 - Conductor tension	1,00
			Tuls-5a_CI6 - Conductor tension	1,00
			Tuls-5a_CI7 - Conductor tension	1,00
			Tuls-5a_CI8 - Conductor tension	1,00
			Tuls-5a_CI11 - Conductor tension	1,00
			Tuls-5a_CI9 - Conductor tension	1,00
			Tuls-5a_CI4 - Conductor tension	1,00
			Tuls-5a_CI12 - Conductor tension	1,00
			Tuls-5a_CI10 - Conductor tension	1,00
			Tuls-5a_CI13 - Conductor tension	1,00
			Tuls-5a_CI14 - Conductor tension	1,00
			Tuls-5a_CI15 - Conductor tension	1,00
			Tuls-5a_CI16 - Conductor tension	1,00
			Tuls-5a_CI17 - Conductor tension	1,00
			Tuls-5a_CI18 - Conductor tension	1,00
			Tuls-5a_CI19 - Conductor tension	1,00
			Tuls-5a_CI20 - Conductor tension	1,00
			Tuls-5a_CI21 - Conductor tension	1,00
			Tuls-5a_CI22 - Conductor tension	1,00
			4C11 - Construction	1,00
5a2	safety	Omhullende - uiterst	6T - self weight of tower	1,20
			6C - self weight of conductor	1,00
			Tuls-6 - Conductor tension	1,00
			4C0 - Construction	1,00
			4C1 - Construction	1,00
			4C2 - Construction	1,00
			4C3 - Construction	1,00
			4C4 - Construction	1,00
			4C5 - Construction	1,00
			4C6 - Construction	1,00
			4C7 - Construction	1,00
			4C8 - Construction	1,00
			4C9 - Construction	1,00
			4C10 - Construction	1,00
			Tuls-5a_CI1 - Conductor tension	0,80
			Tuls-5a_CI3 - Conductor tension	1,00
			Tuls-5a_CI5 - Conductor tension	1,00
			Tuls-5a_CI6 - Conductor tension	1,00
			Tuls-5a_CI7 - Conductor tension	1,00
			Tuls-5a_CI8 - Conductor tension	1,00
			Tuls-5a_CI11 - Conductor tension	1,00
			Tuls-5a_CI9 - Conductor tension	1,00
			Tuls-5a_CI4 - Conductor tension	1,00
			Tuls-5a_CI12 - Conductor tension	1,00
			Tuls-5a_CI10 - Conductor tension	1,00
			Tuls-5a_CI13 - Conductor tension	1,00
			Tuls-5a_CI14 - Conductor tension	1,00
			Tuls-5a_CI15 - Conductor tension	1,00
			Tuls-5a_CI16 - Conductor tension	1,00
			Tuls-5a_CI17 - Conductor tension	1,00
			Tuls-5a_CI18 - Conductor tension	1,00
			Tuls-5a_CI19 - Conductor tension	1,00
			Tuls-5a_CI20 - Conductor tension	1,00
			Tuls-5a_CI21 - Conductor tension	1,00
			Tuls-5a_CI22 - Conductor tension	1,00
			4C11 - Construction	1,00
5a3	safety	Omhullende -	6T - self weight of tower	1,20
			6C - self weight of conductor	1,00
			Tuls-6 - Conductor tension	1,00
			4C0 - Construction	1,00
			4C1 - Construction	1,00
			4C2 - Construction	1,00
			4C3 - Construction	1,00
			4C4 - Construction	1,00

D&C ENGINEERING	Project	150 kV lijn Leiden - Zoetermeer
	Onderdeel	Berekening Mast 52
	Omschrijving	Controle berekening
	Nationale norm	EC - EN
	Auteur	MG

Naam	Omschrijving	Type	Belastingsgevallen	Coëff. [-]
5a3	safety	Omhullende - uiterst	4C5 - Construction	1,00
			4C6 - Construction	1,00
			4C7 - Construction	1,00
			4C8 - Construction	1,00
			4C9 - Construction	1,00
			4C10 - Construction	1,00
			Tuls-5a_CI2 - Conductor tension	1,00
			Tuls-5a_CI1 - Conductor tension	1,00
			Tuls-5a_CI5 - Conductor tension	1,00
			Tuls-5a_CI6 - Conductor tension	1,00
			Tuls-5a_CI7 - Conductor tension	1,00
			Tuls-5a_CI8 - Conductor tension	1,00
			Tuls-5a_CI11 - Conductor tension	1,00
			Tuls-5a_CI9 - Conductor tension	1,00
			Tuls-5a_CI4 - Conductor tension	0,80
			Tuls-5a_CI12 - Conductor tension	1,00
			Tuls-5a_CI10 - Conductor tension	1,00
			Tuls-5a_CI13 - Conductor tension	1,00
			Tuls-5a_CI14 - Conductor tension	1,00
			Tuls-5a_CI15 - Conductor tension	1,00
			Tuls-5a_CI16 - Conductor tension	1,00
			Tuls-5a_CI17 - Conductor tension	1,00
			Tuls-5a_CI18 - Conductor tension	1,00
			Tuls-5a_CI19 - Conductor tension	1,00
			Tuls-5a_CI20 - Conductor tension	1,00
			Tuls-5a_CI21 - Conductor tension	1,00
			Tuls-5a_CI22 - Conductor tension	1,00
			4C11 - Construction	1,00
5a4	safety	Omhullende - uiterst	6T - self weight of tower	1,20
			6C - self weight of conductor	1,00
			Tuls-6 - Conductor tension	1,00
			4C0 - Construction	1,00
			4C1 - Construction	1,00
			4C2 - Construction	1,00
			4C3 - Construction	1,00
			4C4 - Construction	1,00
			4C5 - Construction	1,00
			4C6 - Construction	1,00
			4C7 - Construction	1,00
			4C8 - Construction	1,00
			4C9 - Construction	1,00
			4C10 - Construction	1,00
			Tuls-5a_CI2 - Conductor tension	1,00
			Tuls-5a_CI1 - Conductor tension	1,00
			Tuls-5a_CI3 - Conductor tension	0,80
			Tuls-5a_CI5 - Conductor tension	1,00
			Tuls-5a_CI6 - Conductor tension	1,00
			Tuls-5a_CI7 - Conductor tension	1,00
			Tuls-5a_CI8 - Conductor tension	1,00
			Tuls-5a_CI11 - Conductor tension	1,00
			Tuls-5a_CI9 - Conductor tension	1,00
			Tuls-5a_CI12 - Conductor tension	1,00
			Tuls-5a_CI10 - Conductor tension	1,00
			Tuls-5a_CI13 - Conductor tension	1,00
			Tuls-5a_CI14 - Conductor tension	1,00
			Tuls-5a_CI15 - Conductor tension	1,00
			Tuls-5a_CI16 - Conductor tension	1,00
			Tuls-5a_CI17 - Conductor tension	1,00
			Tuls-5a_CI18 - Conductor tension	1,00
			Tuls-5a_CI19 - Conductor tension	1,00
			Tuls-5a_CI20 - Conductor tension	1,00
			Tuls-5a_CI21 - Conductor tension	1,00
			Tuls-5a_CI22 - Conductor tension	1,00
			4C11 - Construction	1,00
5a5	safety	Omhullende -	6T - self weight of tower	1,20

D&C ENGINEERING	Project	150 kV lijn Leiden - Zoetermeer
	Onderdeel	Berekening Mast 52
	Omschrijving	Controle berekening
	Nationale norm	EC - EN
	Auteur	MG

Naam	Omschrijving	Type	Belastingsgevallen	Coëff. [-]
5a5	safety	Omhullende -	6C - self weight of conductor	1,00
			Tuls-6 - Conductor tension	1,00
			4C0 - Construction	1,00
			4C1 - Construction	1,00
			4C2 - Construction	1,00
			4C3 - Construction	1,00
			4C4 - Construction	1,00
			4C5 - Construction	1,00
			4C6 - Construction	1,00
			4C7 - Construction	1,00
			4C8 - Construction	1,00
			4C9 - Construction	1,00
			4C10 - Construction	1,00
			Tuls-5a_CI2 - Conductor tension	1,00
			Tuls-5a_CI1 - Conductor tension	1,00
			Tuls-5a_CI3 - Conductor tension	1,00
			Tuls-5a_CI6 - Conductor tension	0,80
			Tuls-5a_CI7 - Conductor tension	1,00
			Tuls-5a_CI8 - Conductor tension	1,00
			Tuls-5a_CI11 - Conductor tension	1,00
			Tuls-5a_CI9 - Conductor tension	1,00
			Tuls-5a_CI4 - Conductor tension	1,00
			Tuls-5a_CI12 - Conductor tension	1,00
			Tuls-5a_CI10 - Conductor tension	1,00
			Tuls-5a_CI13 - Conductor tension	1,00
			Tuls-5a_CI14 - Conductor tension	1,00
			Tuls-5a_CI15 - Conductor tension	1,00
			Tuls-5a_CI16 - Conductor tension	1,00
			Tuls-5a_CI17 - Conductor tension	1,00
			Tuls-5a_CI18 - Conductor tension	1,00
			Tuls-5a_CI19 - Conductor tension	1,00
			Tuls-5a_CI20 - Conductor tension	1,00
			Tuls-5a_CI21 - Conductor tension	1,00
			Tuls-5a_CI22 - Conductor tension	1,00
			4C11 - Construction	1,00
5a6	safety	Omhullende -	6T - self weight of tower	1,20
			6C - self weight of conductor	1,00
			Tuls-6 - Conductor tension	1,00
			4C0 - Construction	1,00
			4C1 - Construction	1,00
			4C2 - Construction	1,00
			4C3 - Construction	1,00
			4C4 - Construction	1,00
			4C5 - Construction	1,00
			4C6 - Construction	1,00
			4C7 - Construction	1,00
			4C8 - Construction	1,00
			4C9 - Construction	1,00
			4C10 - Construction	1,00
			Tuls-5a_CI2 - Conductor tension	1,00
			Tuls-5a_CI1 - Conductor tension	1,00
			Tuls-5a_CI3 - Conductor tension	1,00
			Tuls-5a_CI5 - Conductor tension	0,80
			Tuls-5a_CI7 - Conductor tension	1,00
			Tuls-5a_CI8 - Conductor tension	1,00
			Tuls-5a_CI11 - Conductor tension	1,00
			Tuls-5a_CI9 - Conductor tension	1,00
			Tuls-5a_CI4 - Conductor tension	1,00
			Tuls-5a_CI12 - Conductor tension	1,00
			Tuls-5a_CI10 - Conductor tension	1,00
			Tuls-5a_CI13 - Conductor tension	1,00
			Tuls-5a_CI14 - Conductor tension	1,00
			Tuls-5a_CI15 - Conductor tension	1,00
			Tuls-5a_CI16 - Conductor tension	1,00
			Tuls-5a_CI17 - Conductor tension	1,00

D&C ENGINEERING	Project	150 kV lijn Leiden - Zoetermeer
	Onderdeel	Berekening Mast 52
	Omschrijving	Controle berekening
	Nationale norm	EC - EN
	Auteur	MG

Naam	Omschrijving	Type	Belastingsgevallen	Coëff. [-]
5a6	safety	Omhullende - uiterst	Tuls-5a_CI18 - Conductor tension	1,00
			Tuls-5a_CI19 - Conductor tension	1,00
			Tuls-5a_CI20 - Conductor tension	1,00
			Tuls-5a_CI21 - Conductor tension	1,00
			Tuls-5a_CI22 - Conductor tension	1,00
			4C11 - Construction	1,00
5a7	safety	Omhullende - uiterst	6T - self weight of tower	1,20
			6C - self weight of conductor	1,00
			Tuls-6 - Conductor tension	1,00
			4C0 - Construction	1,00
			4C1 - Construction	1,00
			4C2 - Construction	1,00
			4C3 - Construction	1,00
			4C4 - Construction	1,00
			4C5 - Construction	1,00
			4C6 - Construction	1,00
			4C7 - Construction	1,00
			4C8 - Construction	1,00
			4C9 - Construction	1,00
			4C10 - Construction	1,00
			Tuls-5a_CI2 - Conductor tension	1,00
			Tuls-5a_CI1 - Conductor tension	1,00
			Tuls-5a_CI3 - Conductor tension	1,00
			Tuls-5a_CI5 - Conductor tension	1,00
			Tuls-5a_CI6 - Conductor tension	1,00
			Tuls-5a_CI8 - Conductor tension	0,80
			Tuls-5a_CI11 - Conductor tension	1,00
			Tuls-5a_CI9 - Conductor tension	1,00
			Tuls-5a_CI4 - Conductor tension	1,00
			Tuls-5a_CI12 - Conductor tension	1,00
			Tuls-5a_CI10 - Conductor tension	1,00
			Tuls-5a_CI13 - Conductor tension	1,00
			Tuls-5a_CI14 - Conductor tension	1,00
			Tuls-5a_CI15 - Conductor tension	1,00
			Tuls-5a_CI16 - Conductor tension	1,00
			Tuls-5a_CI17 - Conductor tension	1,00
			Tuls-5a_CI18 - Conductor tension	1,00
			Tuls-5a_CI19 - Conductor tension	1,00
			Tuls-5a_CI20 - Conductor tension	1,00
			Tuls-5a_CI21 - Conductor tension	1,00
			Tuls-5a_CI22 - Conductor tension	1,00
			4C11 - Construction	1,00
5a8	safety	Omhullende -	6T - self weight of tower	1,20
			6C - self weight of conductor	1,00
			Tuls-6 - Conductor tension	1,00
			4C0 - Construction	1,00
			4C1 - Construction	1,00
			4C2 - Construction	1,00
			4C3 - Construction	1,00
			4C4 - Construction	1,00
			4C5 - Construction	1,00
			4C6 - Construction	1,00
			4C7 - Construction	1,00
			4C8 - Construction	1,00
			4C9 - Construction	1,00
			4C10 - Construction	1,00
			Tuls-5a_CI2 - Conductor tension	1,00
			Tuls-5a_CI1 - Conductor tension	1,00
			Tuls-5a_CI3 - Conductor tension	1,00
			Tuls-5a_CI5 - Conductor tension	1,00
			Tuls-5a_CI6 - Conductor tension	1,00
			Tuls-5a_CI7 - Conductor tension	0,80
			Tuls-5a_CI11 - Conductor tension	1,00
			Tuls-5a_CI9 - Conductor tension	1,00
			Tuls-5a_CI4 - Conductor tension	1,00

D&C ENGINEERING	Project	150 kV lijn Leiden - Zoetermeer
	Onderdeel	Berekening Mast 52
	Omschrijving	Controle berekening
	Nationale norm	EC - EN
	Auteur	MG

Naam	Omschrijving	Type	Belastingsgevallen	Coëff. [-]
5a8	safety	Omhullende - uiterst	Tuls-5a_CI12 - Conductor tension	1,00
			Tuls-5a_CI10 - Conductor tension	1,00
			Tuls-5a_CI13 - Conductor tension	1,00
			Tuls-5a_CI14 - Conductor tension	1,00
			Tuls-5a_CI15 - Conductor tension	1,00
			Tuls-5a_CI16 - Conductor tension	1,00
			Tuls-5a_CI17 - Conductor tension	1,00
			Tuls-5a_CI18 - Conductor tension	1,00
			Tuls-5a_CI19 - Conductor tension	1,00
			Tuls-5a_CI20 - Conductor tension	1,00
			Tuls-5a_CI21 - Conductor tension	1,00
			Tuls-5a_CI22 - Conductor tension	1,00
			4C11 - Construction	1,00
5a9	safety	Omhullende - uiterst	6T - self weight of tower	1,20
			6C - self weight of conductor	1,00
			Tuls-6 - Conductor tension	1,00
			4C0 - Construction	1,00
			4C1 - Construction	1,00
			4C2 - Construction	1,00
			4C3 - Construction	1,00
			4C4 - Construction	1,00
			4C5 - Construction	1,00
			4C6 - Construction	1,00
			4C7 - Construction	1,00
			4C8 - Construction	1,00
			4C9 - Construction	1,00
			4C10 - Construction	1,00
			Tuls-5a_CI2 - Conductor tension	1,00
			Tuls-5a_CI1 - Conductor tension	1,00
			Tuls-5a_CI3 - Conductor tension	1,00
			Tuls-5a_CI5 - Conductor tension	1,00
			Tuls-5a_CI6 - Conductor tension	1,00
			Tuls-5a_CI7 - Conductor tension	1,00
			Tuls-5a_CI8 - Conductor tension	1,00
			Tuls-5a_CI11 - Conductor tension	1,00
			Tuls-5a_CI4 - Conductor tension	1,00
			Tuls-5a_CI12 - Conductor tension	1,00
			Tuls-5a_CI10 - Conductor tension	0,80
			Tuls-5a_CI13 - Conductor tension	1,00
			Tuls-5a_CI14 - Conductor tension	1,00
			Tuls-5a_CI15 - Conductor tension	1,00
			Tuls-5a_CI16 - Conductor tension	1,00
			Tuls-5a_CI17 - Conductor tension	1,00
			Tuls-5a_CI18 - Conductor tension	1,00
			Tuls-5a_CI19 - Conductor tension	1,00
			Tuls-5a_CI20 - Conductor tension	1,00
			Tuls-5a_CI21 - Conductor tension	1,00
			Tuls-5a_CI22 - Conductor tension	1,00
			4C11 - Construction	1,00
5a10	safety	Omhullende -	6T - self weight of tower	1,20
			6C - self weight of conductor	1,00
			Tuls-6 - Conductor tension	1,00
			4C0 - Construction	1,00
			4C1 - Construction	1,00
			4C2 - Construction	1,00
			4C3 - Construction	1,00
			4C4 - Construction	1,00
			4C5 - Construction	1,00
			4C6 - Construction	1,00
			4C7 - Construction	1,00
			4C8 - Construction	1,00
			4C9 - Construction	1,00
			4C10 - Construction	1,00
			Tuls-5a_CI2 - Conductor tension	1,00
			Tuls-5a_CI1 - Conductor tension	1,00

D&C ENGINEERING	Project	150 kV lijn Leiden - Zoetermeer
	Onderdeel	Berekening Mast 52
	Omschrijving	Controle berekening
	Nationale norm	EC - EN
	Auteur	MG

Naam	Omschrijving	Type	Belastingsgevallen	Coëff. [-]
5a10	safety	Omhullende - uiterst	Tuls-5a_CI3 - Conductor tension	1,00
			Tuls-5a_CI5 - Conductor tension	1,00
			Tuls-5a_CI6 - Conductor tension	1,00
			Tuls-5a_CI7 - Conductor tension	1,00
			Tuls-5a_CI8 - Conductor tension	1,00
			Tuls-5a_CI11 - Conductor tension	1,00
			Tuls-5a_CI9 - Conductor tension	0,80
			Tuls-5a_CI4 - Conductor tension	1,00
			Tuls-5a_CI12 - Conductor tension	1,00
			Tuls-5a_CI13 - Conductor tension	1,00
			Tuls-5a_CI14 - Conductor tension	1,00
			Tuls-5a_CI15 - Conductor tension	1,00
			Tuls-5a_CI16 - Conductor tension	1,00
			Tuls-5a_CI17 - Conductor tension	1,00
			Tuls-5a_CI18 - Conductor tension	1,00
			Tuls-5a_CI19 - Conductor tension	1,00
			Tuls-5a_CI20 - Conductor tension	1,00
			Tuls-5a_CI21 - Conductor tension	1,00
			Tuls-5a_CI22 - Conductor tension	1,00
			4C11 - Construction	1,00
5a11	safety	Omhullende - uiterst	6T - self weight of tower	1,20
			6C - self weight of conductor	1,00
			Tuls-6 - Conductor tension	1,00
			4C0 - Construction	1,00
			4C1 - Construction	1,00
			4C2 - Construction	1,00
			4C3 - Construction	1,00
			4C4 - Construction	1,00
			4C5 - Construction	1,00
			4C6 - Construction	1,00
			4C7 - Construction	1,00
			4C8 - Construction	1,00
			4C9 - Construction	1,00
			4C10 - Construction	1,00
			Tuls-5a_CI2 - Conductor tension	1,00
			Tuls-5a_CI1 - Conductor tension	1,00
			Tuls-5a_CI3 - Conductor tension	1,00
			Tuls-5a_CI5 - Conductor tension	1,00
			Tuls-5a_CI6 - Conductor tension	1,00
			Tuls-5a_CI7 - Conductor tension	1,00
			Tuls-5a_CI8 - Conductor tension	1,00
			Tuls-5a_CI9 - Conductor tension	1,00
			Tuls-5a_CI4 - Conductor tension	1,00
			Tuls-5a_CI12 - Conductor tension	0,80
			Tuls-5a_CI10 - Conductor tension	1,00
			Tuls-5a_CI13 - Conductor tension	1,00
			Tuls-5a_CI14 - Conductor tension	1,00
			Tuls-5a_CI15 - Conductor tension	1,00
			Tuls-5a_CI16 - Conductor tension	1,00
			Tuls-5a_CI17 - Conductor tension	1,00
			Tuls-5a_CI18 - Conductor tension	1,00
			Tuls-5a_CI19 - Conductor tension	1,00
			Tuls-5a_CI20 - Conductor tension	1,00
			Tuls-5a_CI21 - Conductor tension	1,00
			Tuls-5a_CI22 - Conductor tension	1,00
			4C11 - Construction	1,00
5a12	safety	Omhullende -	6T - self weight of tower	1,20
			6C - self weight of conductor	1,00
			Tuls-6 - Conductor tension	1,00
			4C0 - Construction	1,00
			4C1 - Construction	1,00
			4C2 - Construction	1,00
			4C3 - Construction	1,00
			4C4 - Construction	1,00
			4C5 - Construction	1,00

D&C ENGINEERING	Project	150 kV lijn Leiden - Zoetermeer
	Onderdeel	Berekening Mast 52
	Omschrijving	Controle berekening
	Nationale norm	EC - EN
	Auteur	MG

Naam	Omschrijving	Type	Belastingsgevallen	Coëff. [-]
5a12	safety	Omhullende - uiterst	4C6 - Construction	1,00
			4C7 - Construction	1,00
			4C8 - Construction	1,00
			4C9 - Construction	1,00
			4C10 - Construction	1,00
			Tuls-5a_CI2 - Conductor tension	1,00
			Tuls-5a_CI1 - Conductor tension	1,00
			Tuls-5a_CI3 - Conductor tension	1,00
			Tuls-5a_CI5 - Conductor tension	1,00
			Tuls-5a_CI6 - Conductor tension	1,00
			Tuls-5a_CI7 - Conductor tension	1,00
			Tuls-5a_CI8 - Conductor tension	1,00
			Tuls-5a_CI11 - Conductor tension	0,80
			Tuls-5a_CI9 - Conductor tension	1,00
			Tuls-5a_CI4 - Conductor tension	1,00
			Tuls-5a_CI10 - Conductor tension	1,00
			Tuls-5a_CI13 - Conductor tension	1,00
			Tuls-5a_CI14 - Conductor tension	1,00
			Tuls-5a_CI15 - Conductor tension	1,00
			Tuls-5a_CI16 - Conductor tension	1,00
			Tuls-5a_CI17 - Conductor tension	1,00
			Tuls-5a_CI18 - Conductor tension	1,00
			Tuls-5a_CI19 - Conductor tension	1,00
			Tuls-5a_CI20 - Conductor tension	1,00
			Tuls-5a_CI21 - Conductor tension	1,00
			Tuls-5a_CI22 - Conductor tension	1,00
			4C11 - Construction	1,00
5a13	safety	Omhullende - uiterst	6T - self weight of tower	1,20
			6C - self weight of conductor	1,00
			Tuls-6 - Conductor tension	1,00
			4C0 - Construction	1,00
			4C1 - Construction	1,00
			4C2 - Construction	1,00
			4C3 - Construction	1,00
			4C4 - Construction	1,00
			4C5 - Construction	1,00
			4C6 - Construction	1,00
			4C7 - Construction	1,00
			4C8 - Construction	1,00
			4C9 - Construction	1,00
			4C10 - Construction	1,00
			Tuls-5a_CI2 - Conductor tension	1,00
			Tuls-5a_CI1 - Conductor tension	1,00
			Tuls-5a_CI3 - Conductor tension	1,00
			Tuls-5a_CI5 - Conductor tension	1,00
			Tuls-5a_CI6 - Conductor tension	1,00
			Tuls-5a_CI7 - Conductor tension	1,00
			Tuls-5a_CI8 - Conductor tension	1,00
			Tuls-5a_CI11 - Conductor tension	1,00
			Tuls-5a_CI9 - Conductor tension	1,00
			Tuls-5a_CI4 - Conductor tension	1,00
			Tuls-5a_CI12 - Conductor tension	1,00
			Tuls-5a_CI10 - Conductor tension	1,00
			Tuls-5a_CI14 - Conductor tension	0,80
			Tuls-5a_CI15 - Conductor tension	1,00
			Tuls-5a_CI16 - Conductor tension	1,00
			Tuls-5a_CI17 - Conductor tension	1,00
			Tuls-5a_CI18 - Conductor tension	1,00
			Tuls-5a_CI19 - Conductor tension	1,00
			Tuls-5a_CI20 - Conductor tension	1,00
			Tuls-5a_CI21 - Conductor tension	1,00
			Tuls-5a_CI22 - Conductor tension	1,00
			4C11 - Construction	1,00
5a14	safety	Omhullende -	6T - self weight of tower	1,20
			6C - self weight of conductor	1,00

D&C ENGINEERING	Project	150 kV lijn Leiden - Zoetermeer
	Onderdeel	Berekening Mast 52
	Omschrijving	Controle berekening
	Nationale norm	EC - EN
	Auteur	MG

Naam	Omschrijving	Type	Belastingsgevallen	Coëff. [-]
5a14	safety	Omhullende -	Tuls-6 - Conductor tension	1,00
			4C0 - Construction	1,00
			4C1 - Construction	1,00
			4C2 - Construction	1,00
			4C3 - Construction	1,00
			4C4 - Construction	1,00
			4C5 - Construction	1,00
			4C6 - Construction	1,00
			4C7 - Construction	1,00
			4C8 - Construction	1,00
			4C9 - Construction	1,00
			4C10 - Construction	1,00
			Tuls-5a_CI2 - Conductor tension	1,00
			Tuls-5a_CI1 - Conductor tension	1,00
			Tuls-5a_CI3 - Conductor tension	1,00
			Tuls-5a_CI5 - Conductor tension	1,00
			Tuls-5a_CI6 - Conductor tension	1,00
			Tuls-5a_CI7 - Conductor tension	1,00
			Tuls-5a_CI8 - Conductor tension	1,00
			Tuls-5a_CI11 - Conductor tension	1,00
			Tuls-5a_CI9 - Conductor tension	1,00
			Tuls-5a_CI4 - Conductor tension	1,00
			Tuls-5a_CI12 - Conductor tension	1,00
			Tuls-5a_CI10 - Conductor tension	1,00
			Tuls-5a_CI13 - Conductor tension	0,80
			Tuls-5a_CI15 - Conductor tension	1,00
			Tuls-5a_CI16 - Conductor tension	1,00
			Tuls-5a_CI17 - Conductor tension	1,00
			Tuls-5a_CI18 - Conductor tension	1,00
			Tuls-5a_CI19 - Conductor tension	1,00
			Tuls-5a_CI20 - Conductor tension	1,00
			Tuls-5a_CI21 - Conductor tension	1,00
			Tuls-5a_CI22 - Conductor tension	1,00
			4C11 - Construction	1,00
5a15	safety	Omhullende -	6T - self weight of tower	1,20
			6C - self weight of conductor	1,00
			Tuls-6 - Conductor tension	1,00
			4C0 - Construction	1,00
			4C1 - Construction	1,00
			4C2 - Construction	1,00
			4C3 - Construction	1,00
			4C4 - Construction	1,00
			4C5 - Construction	1,00
			4C6 - Construction	1,00
			4C7 - Construction	1,00
			4C8 - Construction	1,00
			4C9 - Construction	1,00
			4C10 - Construction	1,00
			Tuls-5a_CI2 - Conductor tension	1,00
			Tuls-5a_CI1 - Conductor tension	1,00
			Tuls-5a_CI3 - Conductor tension	1,00
			Tuls-5a_CI5 - Conductor tension	1,00
			Tuls-5a_CI6 - Conductor tension	1,00
			Tuls-5a_CI7 - Conductor tension	1,00
			Tuls-5a_CI8 - Conductor tension	1,00
			Tuls-5a_CI11 - Conductor tension	1,00
			Tuls-5a_CI9 - Conductor tension	1,00
			Tuls-5a_CI4 - Conductor tension	1,00
			Tuls-5a_CI12 - Conductor tension	1,00
			Tuls-5a_CI10 - Conductor tension	1,00
			Tuls-5a_CI13 - Conductor tension	1,00
			Tuls-5a_CI14 - Conductor tension	1,00
			Tuls-5a_CI16 - Conductor tension	0,80
			Tuls-5a_CI17 - Conductor tension	1,00
			Tuls-5a_CI18 - Conductor tension	1,00

D&C ENGINEERING	Project	150 kV lijn Leiden - Zoetermeer
	Onderdeel	Berekening Mast 52
	Omschrijving	Controle berekening
	Nationale norm	EC - EN
	Auteur	MG

Naam	Omschrijving	Type	Belastingsgevallen	Coëff. [-]
5a15	safety	Omhullende - uiterst	Tuls-5a_CI19 - Conductor tension	1,00
			Tuls-5a_CI20 - Conductor tension	1,00
			Tuls-5a_CI21 - Conductor tension	1,00
			Tuls-5a_CI22 - Conductor tension	1,00
			4C11 - Construction	1,00
5a16	safety	Omhullende - uiterst	6T - self weight of tower	1,20
			6C - self weight of conductor	1,00
			Tuls-6 - Conductor tension	1,00
			4C0 - Construction	1,00
			4C1 - Construction	1,00
			4C2 - Construction	1,00
			4C3 - Construction	1,00
			4C4 - Construction	1,00
			4C5 - Construction	1,00
			4C6 - Construction	1,00
			4C7 - Construction	1,00
			4C8 - Construction	1,00
			4C9 - Construction	1,00
			4C10 - Construction	1,00
			Tuls-5a_CI2 - Conductor tension	1,00
			Tuls-5a_CI1 - Conductor tension	1,00
			Tuls-5a_CI3 - Conductor tension	1,00
			Tuls-5a_CI5 - Conductor tension	1,00
			Tuls-5a_CI6 - Conductor tension	1,00
			Tuls-5a_CI7 - Conductor tension	1,00
			Tuls-5a_CI8 - Conductor tension	1,00
			Tuls-5a_CI11 - Conductor tension	1,00
			Tuls-5a_CI9 - Conductor tension	1,00
			Tuls-5a_CI4 - Conductor tension	1,00
			Tuls-5a_CI12 - Conductor tension	1,00
			Tuls-5a_CI10 - Conductor tension	1,00
			Tuls-5a_CI13 - Conductor tension	1,00
			Tuls-5a_CI14 - Conductor tension	1,00
			Tuls-5a_CI15 - Conductor tension	0,80
			Tuls-5a_CI17 - Conductor tension	1,00
			Tuls-5a_CI18 - Conductor tension	1,00
			Tuls-5a_CI19 - Conductor tension	1,00
			Tuls-5a_CI20 - Conductor tension	1,00
			Tuls-5a_CI21 - Conductor tension	1,00
			Tuls-5a_CI22 - Conductor tension	1,00
			4C11 - Construction	1,00
5a17	safety	Omhullende -	6T - self weight of tower	1,20
			6C - self weight of conductor	1,00
			Tuls-6 - Conductor tension	1,00
			4C0 - Construction	1,00
			4C1 - Construction	1,00
			4C2 - Construction	1,00
			4C3 - Construction	1,00
			4C4 - Construction	1,00
			4C5 - Construction	1,00
			4C6 - Construction	1,00
			4C7 - Construction	1,00
			4C8 - Construction	1,00
			4C9 - Construction	1,00
			4C10 - Construction	1,00
			Tuls-5a_CI2 - Conductor tension	1,00
			Tuls-5a_CI1 - Conductor tension	1,00
			Tuls-5a_CI3 - Conductor tension	1,00
			Tuls-5a_CI5 - Conductor tension	1,00
			Tuls-5a_CI6 - Conductor tension	1,00
			Tuls-5a_CI7 - Conductor tension	1,00
			Tuls-5a_CI8 - Conductor tension	1,00
			Tuls-5a_CI11 - Conductor tension	1,00
			Tuls-5a_CI9 - Conductor tension	1,00
			Tuls-5a_CI4 - Conductor tension	1,00

D&C ENGINEERING	Project	150 kV lijn Leiden - Zoetermeer
	Onderdeel	Berekening Mast 52
	Omschrijving	Controle berekening
	Nationale norm	EC - EN
	Auteur	MG

Naam	Omschrijving	Type	Belastingsgevallen	Coëff. [-]
5a17	safety	Omhullende - uiterst	Tuls-5a_CI12 - Conductor tension	1,00
			Tuls-5a_CI10 - Conductor tension	1,00
			Tuls-5a_CI13 - Conductor tension	1,00
			Tuls-5a_CI14 - Conductor tension	1,00
			Tuls-5a_CI15 - Conductor tension	1,00
			Tuls-5a_CI16 - Conductor tension	1,00
			Tuls-5a_CI18 - Conductor tension	0,80
			Tuls-5a_CI19 - Conductor tension	1,00
			Tuls-5a_CI20 - Conductor tension	1,00
			Tuls-5a_CI21 - Conductor tension	1,00
			Tuls-5a_CI22 - Conductor tension	1,00
			4C11 - Construction	1,00
5a18	safety	Omhullende - uiterst	6T - self weight of tower	1,20
			6C - self weight of conductor	1,00
			Tuls-6 - Conductor tension	1,00
			4C0 - Construction	1,00
			4C1 - Construction	1,00
			4C2 - Construction	1,00
			4C3 - Construction	1,00
			4C4 - Construction	1,00
			4C5 - Construction	1,00
			4C6 - Construction	1,00
			4C7 - Construction	1,00
			4C8 - Construction	1,00
			4C9 - Construction	1,00
			4C10 - Construction	1,00
			Tuls-5a_CI2 - Conductor tension	1,00
			Tuls-5a_CI1 - Conductor tension	1,00
			Tuls-5a_CI3 - Conductor tension	1,00
			Tuls-5a_CI5 - Conductor tension	1,00
			Tuls-5a_CI6 - Conductor tension	1,00
			Tuls-5a_CI7 - Conductor tension	1,00
			Tuls-5a_CI8 - Conductor tension	1,00
			Tuls-5a_CI11 - Conductor tension	1,00
			Tuls-5a_CI9 - Conductor tension	1,00
			Tuls-5a_CI4 - Conductor tension	1,00
			Tuls-5a_CI12 - Conductor tension	1,00
			Tuls-5a_CI10 - Conductor tension	1,00
			Tuls-5a_CI13 - Conductor tension	1,00
			Tuls-5a_CI14 - Conductor tension	1,00
			Tuls-5a_CI15 - Conductor tension	1,00
			Tuls-5a_CI16 - Conductor tension	1,00
			Tuls-5a_CI17 - Conductor tension	0,80
			Tuls-5a_CI19 - Conductor tension	1,00
			Tuls-5a_CI20 - Conductor tension	1,00
			Tuls-5a_CI21 - Conductor tension	1,00
			Tuls-5a_CI22 - Conductor tension	1,00
			4C11 - Construction	1,00
5a19	safety	Omhullende -	6T - self weight of tower	1,20
			6C - self weight of conductor	1,00
			Tuls-6 - Conductor tension	1,00
			4C0 - Construction	1,00
			4C1 - Construction	1,00
			4C2 - Construction	1,00
			4C3 - Construction	1,00
			4C4 - Construction	1,00
			4C5 - Construction	1,00
			4C6 - Construction	1,00
			4C7 - Construction	1,00
			4C8 - Construction	1,00
			4C9 - Construction	1,00
			4C10 - Construction	1,00
			Tuls-5a_CI2 - Conductor tension	1,00
			Tuls-5a_CI1 - Conductor tension	1,00
			Tuls-5a_CI3 - Conductor tension	1,00

D&C ENGINEERING	Project	150 kV lijn Leiden - Zoetermeer
	Onderdeel	Berekening Mast 52
	Omschrijving	Controle berekening
	Nationale norm	EC - EN
	Auteur	MG

Naam	Omschrijving	Type	Belastingsgevallen	Coëff. [-]
5a19	safety	Omhullende - uiterst	Tuls-5a_CI5 - Conductor tension	1,00
			Tuls-5a_CI6 - Conductor tension	1,00
			Tuls-5a_CI7 - Conductor tension	1,00
			Tuls-5a_CI8 - Conductor tension	1,00
			Tuls-5a_CI11 - Conductor tension	1,00
			Tuls-5a_CI9 - Conductor tension	1,00
			Tuls-5a_CI4 - Conductor tension	1,00
			Tuls-5a_CI12 - Conductor tension	1,00
			Tuls-5a_CI10 - Conductor tension	1,00
			Tuls-5a_CI13 - Conductor tension	1,00
			Tuls-5a_CI14 - Conductor tension	1,00
			Tuls-5a_CI15 - Conductor tension	1,00
			Tuls-5a_CI16 - Conductor tension	1,00
			Tuls-5a_CI17 - Conductor tension	1,00
			Tuls-5a_CI18 - Conductor tension	1,00
			Tuls-5a_CI20 - Conductor tension	0,80
			Tuls-5a_CI21 - Conductor tension	1,00
			Tuls-5a_CI22 - Conductor tension	1,00
			4C11 - Construction	1,00
5a20	safety	Omhullende - uiterst	6T - self weight of tower	1,20
			6C - self weight of conductor	1,00
			Tuls-6 - Conductor tension	1,00
			4C0 - Construction	1,00
			4C1 - Construction	1,00
			4C2 - Construction	1,00
			4C3 - Construction	1,00
			4C4 - Construction	1,00
			4C5 - Construction	1,00
			4C6 - Construction	1,00
			4C7 - Construction	1,00
			4C8 - Construction	1,00
			4C9 - Construction	1,00
			4C10 - Construction	1,00
			Tuls-5a_CI2 - Conductor tension	1,00
			Tuls-5a_CI1 - Conductor tension	1,00
			Tuls-5a_CI3 - Conductor tension	1,00
			Tuls-5a_CI5 - Conductor tension	1,00
			Tuls-5a_CI6 - Conductor tension	1,00
			Tuls-5a_CI7 - Conductor tension	1,00
			Tuls-5a_CI8 - Conductor tension	1,00
			Tuls-5a_CI11 - Conductor tension	1,00
			Tuls-5a_CI9 - Conductor tension	1,00
			Tuls-5a_CI4 - Conductor tension	1,00
			Tuls-5a_CI12 - Conductor tension	1,00
			Tuls-5a_CI10 - Conductor tension	1,00
			Tuls-5a_CI13 - Conductor tension	1,00
			Tuls-5a_CI14 - Conductor tension	1,00
			Tuls-5a_CI15 - Conductor tension	1,00
			Tuls-5a_CI16 - Conductor tension	1,00
			Tuls-5a_CI17 - Conductor tension	1,00
			Tuls-5a_CI18 - Conductor tension	1,00
			Tuls-5a_CI19 - Conductor tension	0,80
			Tuls-5a_CI21 - Conductor tension	1,00
			Tuls-5a_CI22 - Conductor tension	1,00
			4C11 - Construction	1,00
5a21	safety	Omhullende - uiterst	6T - self weight of tower	1,20
			6C - self weight of conductor	1,00
			Tuls-6 - Conductor tension	1,00
			4C0 - Construction	1,00
			4C1 - Construction	1,00
			4C2 - Construction	1,00
			4C3 - Construction	1,00
			4C4 - Construction	1,00
			4C5 - Construction	1,00
			4C6 - Construction	1,00

D&C ENGINEERING	Project	150 kV lijn Leiden - Zoetermeer
	Onderdeel	Berekening Mast 52
	Omschrijving	Controle berekening
	Nationale norm	EC - EN
	Auteur	MG

Naam	Omschrijving	Type	Belastingsgevallen	Coëff. [-]
5a21	safety	Omhullende - uiterst	4C7 - Construction	1,00
			4C8 - Construction	1,00
			4C9 - Construction	1,00
			4C10 - Construction	1,00
			Tuls-5a_CI2 - Conductor tension	1,00
			Tuls-5a_CI1 - Conductor tension	1,00
			Tuls-5a_CI3 - Conductor tension	1,00
			Tuls-5a_CI5 - Conductor tension	1,00
			Tuls-5a_CI6 - Conductor tension	1,00
			Tuls-5a_CI7 - Conductor tension	1,00
			Tuls-5a_CI8 - Conductor tension	1,00
			Tuls-5a_CI11 - Conductor tension	1,00
			Tuls-5a_CI9 - Conductor tension	1,00
			Tuls-5a_CI4 - Conductor tension	1,00
			Tuls-5a_CI12 - Conductor tension	1,00
			Tuls-5a_CI10 - Conductor tension	1,00
			Tuls-5a_CI13 - Conductor tension	1,00
			Tuls-5a_CI14 - Conductor tension	1,00
			Tuls-5a_CI15 - Conductor tension	1,00
			Tuls-5a_CI16 - Conductor tension	1,00
			Tuls-5a_CI17 - Conductor tension	1,00
			Tuls-5a_CI18 - Conductor tension	1,00
			Tuls-5a_CI19 - Conductor tension	1,00
			Tuls-5a_CI20 - Conductor tension	1,00
			Tuls-5a_CI22 - Conductor tension	0,80
			4C11 - Construction	1,00
5a22	safety	Omhullende - uiterst	6T - self weight of tower	1,20
			6C - self weight of conductor	1,00
			Tuls-6 - Conductor tension	1,00
			4C0 - Construction	1,00
			4C1 - Construction	1,00
			4C2 - Construction	1,00
			4C3 - Construction	1,00
			4C4 - Construction	1,00
			4C5 - Construction	1,00
			4C6 - Construction	1,00
			4C7 - Construction	1,00
			4C8 - Construction	1,00
			4C9 - Construction	1,00
			4C10 - Construction	1,00
			Tuls-5a_CI2 - Conductor tension	1,00
			Tuls-5a_CI1 - Conductor tension	1,00
			Tuls-5a_CI3 - Conductor tension	1,00
			Tuls-5a_CI5 - Conductor tension	1,00
			Tuls-5a_CI6 - Conductor tension	1,00
			Tuls-5a_CI7 - Conductor tension	1,00
			Tuls-5a_CI8 - Conductor tension	1,00
			Tuls-5a_CI11 - Conductor tension	1,00
			Tuls-5a_CI9 - Conductor tension	1,00
			Tuls-5a_CI4 - Conductor tension	1,00
			Tuls-5a_CI12 - Conductor tension	1,00
			Tuls-5a_CI10 - Conductor tension	1,00
			Tuls-5a_CI13 - Conductor tension	1,00
			Tuls-5a_CI14 - Conductor tension	1,00
			Tuls-5a_CI15 - Conductor tension	1,00
			Tuls-5a_CI16 - Conductor tension	1,00
			Tuls-5a_CI17 - Conductor tension	1,00
			Tuls-5a_CI18 - Conductor tension	1,00
			Tuls-5a_CI19 - Conductor tension	1,00
			Tuls-5a_CI20 - Conductor tension	1,00
			Tuls-5a_CI21 - Conductor tension	0,80
			4C11 - Construction	1,00
5a23	safety	Omhullende - uiterst	6T - self weight of tower	1,20
			6C - self weight of conductor	1,00
			Tuls-6 - Conductor tension	1,00

D&C ENGINEERING	Project	150 kV lijn Leiden - Zoetermeer
	Onderdeel	Berekening Mast 52
	Omschrijving	Controle berekening
	Nationale norm	EC - EN
	Auteur	MG

Naam	Omschrijving	Type	Belastingsgevallen	Coëff. [-]
5a23	safety	Omhullende - uiterst	4C0 - Construction	1,00
			4C1 - Construction	1,00
			4C2 - Construction	1,00
			4C3 - Construction	1,00
			4C4 - Construction	1,00
			4C5 - Construction	1,00
			4C6 - Construction	1,00
			4C7 - Construction	1,00
			4C8 - Construction	1,00
			4C9 - Construction	1,00
			4C10 - Construction	1,00
			Tuls-5a_CI2 - Conductor tension	1,00
			Tuls-5a_CI1 - Conductor tension	1,00
			Tuls-5a_CI3 - Conductor tension	1,00
			Tuls-5a_CI5 - Conductor tension	1,00
			Tuls-5a_CI6 - Conductor tension	1,00
			Tuls-5a_CI7 - Conductor tension	1,00
			Tuls-5a_CI8 - Conductor tension	1,00
			Tuls-5a_CI11 - Conductor tension	1,00
			Tuls-5a_CI9 - Conductor tension	1,00
			Tuls-5a_CI4 - Conductor tension	1,00
			Tuls-5a_CI12 - Conductor tension	1,00
			Tuls-5a_CI10 - Conductor tension	1,00
			Tuls-5a_CI13 - Conductor tension	1,00
			Tuls-5a_CI14 - Conductor tension	1,00
			Tuls-5a_CI15 - Conductor tension	1,00
			Tuls-5a_CI16 - Conductor tension	1,00
			Tuls-5a_CI17 - Conductor tension	1,00
			Tuls-5a_CI18 - Conductor tension	1,00
			Tuls-5a_CI19 - Conductor tension	1,00
			Tuls-5a_CI20 - Conductor tension	1,00
			Tuls-5a_CI21 - Conductor tension	0,80
			4C11 - Construction	1,00

11. Resultaten

11.1. Interne krachten in staaf

Lineaire berekening, Extreem : Staaf, Systeem : Hoofd
Selectie : Alle
Klasse : All UGT

Staaf	BG	Geval beschrijving	N [kN]
B7	1a-p/28	wind;10	**83,51**
B7	1a/32	wind;10	**-120,07**
B8	1a-p/15	wind;10	**-57,19**
B8	1a/5	wind;10	**65,16**
B9	1a/7	wind;10	**55,29**
B9	1a/5	wind;10	**-60,06**
B10	1a-p/17	wind;10	**-50,68**
B10	1a/16	wind;10	**48,92**
B11	5a12/128	safety	**1,80**
B11	5a11/122	safety	**-2,57**
B12	1a-p/15	wind;10	**-54,22**
B12	1a/5	wind;10	**62,27**
B13	5a5/129	safety	**1,74**
B13	5a6/130	safety	**-2,63**
B14	1a-p/17	wind;10	**36,01**
B14	5a5/121	safety	**-47,82**
B16	1a/7	wind;10	**59,16**
B16	1a/5	wind;10	**-63,81**
B17	3/4	wind+ice	**0,34**
B17	1a-p/35	wind;10	**0,09**
B18	5a11/122	safety	**-47,83**
B18	1a-p/17	wind;10	**35,54**
B22	1a/7	wind;10	**-63,40**
B22	1a-p/14	wind;10	**56,92**
B26	1a/16	wind;10	**47,62**
B26	1a/38	wind;10	**-53,04**
B31	1a/38	wind;10	**51,93**
B31	1a-p/39	wind;10	**-47,75**
B32	1a/7	wind;10	**61,11**
B32	1a-p/14	wind;10	**-55,31**
B33	1a-p/39	wind;10	**-47,16**
B33	1a/38	wind;10	**52,16**
B34	1a/7	wind;10	**63,83**
B34	1a-p/14	wind;10	**-58,24**
B36	1a-p/15	wind;10	**66,75**
B36	1a/5	wind;10	**-80,82**
B37	1a-p/15	wind;10	**61,56**
B37	1a/5	wind;10	**-75,61**
B38	1a/16	wind;10	**-52,02**
B38	1a-p/17	wind;10	**55,33**
B39	1a-p/17	wind;10	**56,01**
B39	1a/16	wind;10	**-50,97**
B73	1a/38	wind;10	**-52,82**
B73	1a/16	wind;10	**48,37**
B74	1a/5	wind;10	**-64,83**
B74	1a-p/15	wind;10	**55,77**
B75	1a/38	wind;10	**52,21**
B75	1a/16	wind;10	**-48,63**
B76	1a/7	wind;10	**-66,59**
B76	1a-p/14	wind;10	**60,39**
B89	1a/5	wind;10	**57,86**
B89	1a/7	wind;10	**-57,71**
B90	1a/38	wind;10	**-43,12**
B90	5a5/55	safety	**41,45**
B91	1a/7	wind;10	**-61,36**
B91	1a/5	wind;10	**61,67**
B92	1a/38	wind;10	**-42,78**
B92	5a11/122	safety	**41,40**
B93	1a-p/17	wind;10	**-51,05**
B93	1a/16	wind;10	**48,32**

Staaf	BG	Geval beschrijving	N [kN]
B94	1a-p/15	wind;10	**59,11**
B94	1a/5	wind;10	**-68,15**
B95	1a/38	wind;10	**51,67**
B95	1a/16	wind;10	**-49,28**
B98	1a/7	wind;10	**69,75**
B98	1a-p/14	wind;10	**-63,63**
B99	1a/38	wind;10	**52,76**
B99	1a/16	wind;10	**-48,90**
B100	1a/5	wind;10	**67,53**
B100	1a-p/15	wind;10	**-57,94**
B101	1a/16	wind;10	**47,62**
B101	1a/38	wind;10	**-53,65**
B102	1a-p/35	wind;10	**0,27**
B102	1a/34	wind;10	**-0,31**
B103	1a-p/27	wind;10	**0,25**
B103	1a/26	wind;10	**-0,31**
B104	1a-p/28	wind;10	**0,24**
B104	1a/29	wind;10	**-0,33**
B105	1a-p/30	wind;10	**0,23**
B105	1a/32	wind;10	**-0,34**
B106	1a/16	wind;10	**48,54**
B106	1a/38	wind;10	**-53,29**
B107	1a/7	wind;10	**65,95**
B107	1a-p/14	wind;10	**-59,69**
B108	1a/38	wind;10	**53,17**
B108	1a/16	wind;10	**-48,25**
B109	1a/5	wind;10	**71,84**
B109	1a-p/15	wind;10	**-62,36**
B110	1a-p/14	wind;10	**0,00**
B110	1a/7	wind;10	**0,00**
B111	1a-p/39	wind;10	**0,00**
B111	1a/38	wind;10	**0,00**
B112	1a-p/15	wind;10	**0,00**
B112	1a/5	wind;10	**0,00**
B113	1a-p/17	wind;10	**0,00**
B113	1a/16	wind;10	**0,00**
B114	1a-p/14	wind;10	**68,68**
B114	1a/7	wind;10	**-78,56**
B115	1a-p/39	wind;10	**50,07**
B115	1a/38	wind;10	**-57,26**
B116	1a/7	wind;10	**-73,65**
B116	1a-p/14	wind;10	**63,56**
B117	1a/38	wind;10	**-57,64**
B117	1a-p/39	wind;10	**49,01**
B118	1a-p/35	wind;10	**90,99**
B118	1a/32	wind;10	**-120,06**
B119	1a-p/35	wind;10	**91,02**
B119	1a/34	wind;10	**-112,52**
B120	1a-p/27	wind;10	**90,94**
B120	1a/29	wind;10	**-119,99**
B121	5a5/129	safety	**-2,55**
B121	5a6/130	safety	**1,82**
B122	5a12/131	safety	**-2,60**
B122	5a11/132	safety	**1,77**
B123	3/4	wind+ice	**-0,74**
B123	1a-p/35	wind;10	**-0,48**
B124	3-p/9	wind+ice	**0,01**
B124	1a/29	wind;10	**-0,26**
B129	5a11/132	safety	**-11,50**
B129	5a12/128	safety	**11,56**

D&C ENGINEERING	Project	150 kV lijn Leiden - Zoetermeer
	Onderdeel	Berekening Mast 52
	Omschrijving	Controle berekening
	Nationale norm	EC - EN
	Auteur	MG

Staaf	BG	Geval beschrijving	N [kN]
B130	5a6/133	safety	**11,50**
B130	5a5/57	safety	**-11,54**
B131	5a5/121	safety	**11,50**
B131	5a6/56	safety	**-11,55**
B132	5a12/128	safety	**-11,64**
B132	5a11/132	safety	**11,41**
B133	3-p/134	wind+ice	**0,06**
B133	1a/7	wind;10	**0,30**
B134	1a/7	wind;10	**-0,20**
B134	3-p/135	wind+ice	**-0,03**
B135	3-p/135	wind+ice	**-0,19**
B135	1a/7	wind;10	**-0,42**
C1	1a/29	wind;10	**-904,67**
C1	1a-p/28	wind;10	**644,11**
C2	1a-p/30	wind;10	**625,50**
C2	1a/32	wind;10	**-905,23**
C3	1a/34	wind;10	**-850,73**
C3	1a-p/35	wind;10	**698,46**
C4	1a/26	wind;10	**-831,26**
C4	1a-p/27	wind;10	**698,07**
C5	1a/29	wind;10	**-865,21**
C5	1a-p/28	wind;10	**623,47**
C6	1a/32	wind;10	**-865,74**
C6	1a-p/30	wind;10	**605,55**
C7	1a-p/27	wind;10	**675,46**
C7	1a/26	wind;10	**-794,49**
C8	1a-p/35	wind;10	**675,83**
C8	1a/34	wind;10	**-813,25**
C9	1a-p/28	wind;10	**525,89**
C9	1a/29	wind;10	**-742,08**
C10	1a-p/30	wind;10	**509,47**
C10	1a/32	wind;10	**-741,00**
C11	1a-p/27	wind;10	**572,21**
C11	1a/26	wind;10	**-680,82**
C12	1a-p/35	wind;10	**571,36**
C12	1a/34	wind;10	**-695,64**
C13	1a/29	wind;10	**-594,28**
C13	1a-p/28	wind;10	**386,70**
C14	1a/32	wind;10	**-592,84**
C14	1a-p/30	wind;10	**373,22**
C15	1a/26	wind;10	**-544,98**
C15	1a-p/27	wind;10	**425,85**
C16	1a/34	wind;10	**-556,27**
C16	1a-p/35	wind;10	**424,24**
C17	1a/29	wind;10	**-453,34**
C17	1a-p/28	wind;10	**277,66**
C18	1a-p/30	wind;10	**266,73**
C18	1a/32	wind;10	**-449,33**
C19	1a/26	wind;10	**-419,48**
C19	1a-p/27	wind;10	**307,33**
C20	1a/34	wind;10	**-424,39**
C20	1a-p/35	wind;10	**303,78**
S1	1a-p/17	wind;10	**0,42**
S1	1a/16	wind;10	**-0,52**
S2	5a1/18	safety	**11,21**
S2	3/6	wind+ice	**-4,40**
S3	3/6	wind+ice	**2,98**
S3	5a1/18	safety	**-7,21**
S4	3-p/20	wind+ice	**7,84**
S4	5a1/19	safety	**-10,09**
S5	3-p/21	wind+ice	**-4,74**
S5	5a1/19	safety	**6,29**
S6	3/23	wind+ice	**2,03**
S6	3-p/22	wind+ice	**-1,44**
S7	3-p/22	wind+ice	**4,14**
S7	5a1/24	safety	**-4,89**
S8	5a1/25	safety	**6,43**

Staaf	BG	Geval beschrijving	N [kN]
S8	3/6	wind+ice	**-6,08**
S9	5a1/19	safety	**4,91**
S9	3/23	wind+ice	**-3,67**
S10	5a1/19	safety	**-6,74**
S10	3/23	wind+ice	**4,98**
S11	1a-p/27	wind;10	**0,53**
S11	1a/26	wind;10	**-1,46**
S12	3/6	wind+ice	**0,42**
S12	3-p/20	wind+ice	**-0,15**
S13	1a-p/27	wind;10	**0,39**
S13	1a/26	wind;10	**-1,30**
S14	1a-p/27	wind;10	**-0,14**
S14	1a/26	wind;10	**0,58**
S15	1a-p/27	wind;10	**0,62**
S15	1a/26	wind;10	**-1,77**
S16	1a/26	wind;10	**0,95**
S16	1a-p/27	wind;10	**-0,30**
S17	1a-p/27	wind;10	**0,49**
S17	3/6	wind+ice	**-2,39**
S18	3/6	wind+ice	**0,71**
S18	1a-p/28	wind;10	**-0,19**
S19	1a-p/28	wind;10	**0,72**
S19	1a/29	wind;10	**-1,62**
S20	1a/26	wind;10	**0,65**
S20	1a-p/27	wind;10	**-0,17**
S21	1a-p/28	wind;10	**0,55**
S21	1a/29	wind;10	**-1,70**
S22	1a-p/28	wind;10	**-0,43**
S22	1a/29	wind;10	**1,04**
S23	3/23	wind+ice	**4,67**
S23	1a-p/30	wind;10	**-4,62**
S24	1a-p/28	wind;10	**4,31**
S24	3/6	wind+ice	**-6,50**
S25	1a-p/17	wind;10	**-5,90**
S25	3/31	wind+ice	**-13,81**
S26	5a5/33	safety	**30,20**
S26	1a/32	wind;10	**-44,58**
S27	1a-p/35	wind;10	**31,72**
S27	1a/34	wind;10	**-34,74**
S28	1a-p/35	wind;10	**35,46**
S28	5a5/36	safety	**-37,99**
S29	1a-p/30	wind;10	**26,46**
S29	1a/32	wind;10	**-42,22**
S30	1a-p/27	wind;10	**0,15**
S30	1a/26	wind;10	**-0,20**
S31	1a/34	wind;10	**25,23**
S31	1a-p/35	wind;10	**-24,42**
S33	1a-p/28	wind;10	**-9,60**
S33	3/6	wind+ice	**-21,27**
S34	1a-p/35	wind;10	**-25,60**
S34	1a/34	wind;10	**29,11**
S35	1a-p/35	wind;10	**-10,00**
S35	3/37	wind+ice	**-22,72**
S36	1a-p/30	wind;10	**-21,57**
S36	1a/32	wind;10	**31,08**
S38	1a/26	wind;10	**0,00**
S38	1a/38	wind;10	**0,00**
S41	1a/5	wind;10	**0,00**
S41	1a/16	wind;10	**0,00**
S42	1a/34	wind;10	**-0,99**
S42	1a/29	wind;10	**0,90**
S43	1a/7	wind;10	**0,00**
S43	1a/7	wind;10	**0,00**
S44	1a/5	wind;10	**-0,55**
S44	1a/7	wind;10	**1,02**
S46	1a-p/14	wind;10	**0,00**
S46	1a/5	wind;10	**0,00**

D&C ENGINEERING	Project	150 kV lijn Leiden - Zoetermeer
	Onderdeel	Berekening Mast 52
	Omschrijving	Controle berekening
	Nationale norm	EC - EN
	Auteur	MG

Staaf	BG	Geval beschrijving	N [kN]
S47	1a/5	wind;10	**0,00**
S47	1a/32	wind;10	**0,00**
S49	1a/26	wind;10	**-0,26**
S49	1a/26	wind;10	**0,00**
S51	1a/29	wind;10	**-0,09**
S51	1a/16	wind;10	**0,00**
S52	1a/16	wind;10	**0,00**
S52	1a-p/17	wind;10	**0,00**
S54	1a-p/14	wind;10	**3,98**
S54	1a/7	wind;10	**-4,92**
S55	1a/26	wind;10	**-0,09**
S55	1a/38	wind;10	**0,00**
S56	1a/16	wind;10	**0,00**
S56	1a/38	wind;10	**0,00**
S61	1a/34	wind;10	**0,00**
S61	1a/32	wind;10	**-0,26**
S63	1a-p/39	wind;10	**0,45**
S63	1a/38	wind;10	**-0,55**
S64	1a-p/17	wind;10	**0,39**
S64	1a/16	wind;10	**-0,48**
S65	5a3/40	safety	**11,28**
S65	3/4	wind+ice	**-4,92**
S66	3/41	wind+ice	**2,61**
S66	5a3/40	safety	**-7,16**
S67	3-p/43	wind+ice	**7,62**
S67	5a3/42	safety	**-9,80**
S68	5a3/42	safety	**6,28**
S68	3-p/44	wind+ice	**-4,92**
S69	3/45	wind+ice	**2,04**
S69	3-p/9	wind+ice	**-1,31**
S70	3-p/9	wind+ice	**4,19**
S70	5a3/46	safety	**-4,83**
S71	5a3/46	safety	**6,47**
S71	3-p/9	wind+ice	**-5,90**
S72	5a3/47	safety	**4,82**
S72	3/45	wind+ice	**-3,64**
S73	3/45	wind+ice	**5,08**
S73	5a3/47	safety	**-6,54**
S74	1a-p/30	wind;10	**0,36**
S74	1a/32	wind;10	**-1,53**
S75	1a/34	wind;10	**0,42**
S75	1a-p/35	wind;10	**-0,15**
S76	1a-p/35	wind;10	**0,81**
S76	1a/34	wind;10	**-1,70**
S77	1a/32	wind;10	**0,67**
S77	1a-p/30	wind;10	**-0,19**
S78	1a-p/35	wind;10	**0,61**
S78	1a/34	wind;10	**-1,78**
S79	1a/34	wind;10	**1,09**
S79	1a-p/35	wind;10	**-0,47**
S80	1a-p/30	wind;10	**0,68**
S80	3/4	wind+ice	**-1,86**
S81	3/4	wind+ice	**0,59**
S81	1a-p/30	wind;10	**-0,18**
S82	1a-p/30	wind;10	**0,44**
S82	1a/32	wind;10	**-1,37**
S83	1a/32	wind;10	**0,61**
S83	1a-p/30	wind;10	**-0,17**
S84	1a-p/30	wind;10	**0,72**
S84	1a/32	wind;10	**-1,85**
S85	1a/32	wind;10	**1,00**
S85	1a-p/30	wind;10	**-0,35**
S86	3/45	wind+ice	**4,64**
S86	1a-p/28	wind;10	**-4,94**
S87	1a-p/30	wind;10	**4,55**
S87	3/4	wind+ice	**-6,55**
S88	3/31	wind+ice	**-13,87**

Staaf	BG	Geval beschrijving	N [kN]
S88	1a-p/17	wind;10	**-6,00**
S89	5a11/48	safety	**30,34**
S89	1a/29	wind;10	**-43,78**
S90	1a-p/27	wind;10	**31,51**
S90	1a/26	wind;10	**-34,48**
S91	1a-p/27	wind;10	**34,78**
S91	5a11/49	safety	**-37,87**
S92	1a-p/28	wind;10	**25,51**
S92	1a/29	wind;10	**-41,07**
S93	1a/26	wind;10	**0,30**
S93	1a-p/27	wind;10	**-0,18**
S94	1a-p/39	wind;10	**2,60**
S94	1a/38	wind;10	**-2,84**
S95	1a-p/17	wind;10	**2,66**
S95	1a/16	wind;10	**-2,77**
S96	1a-p/39	wind;10	**2,62**
S96	1a/38	wind;10	**-3,19**
S97	1a-p/17	wind;10	**2,94**
S97	1a/16	wind;10	**-2,87**
S98	1a-p/17	wind;10	**1,56**
S98	1a/16	wind;10	**-1,62**
S99	1a-p/17	wind;10	**1,68**
S99	1a/38	wind;10	**-1,84**
S100	1a-p/14	wind;10	**10,95**
S100	3/6	wind+ice	**-63,73**
S101	3/6	wind+ice	**59,90**
S101	1a-p/14	wind;10	**-13,79**
S102	1a/7	wind;10	**-42,12**
S102	1a-p/14	wind;10	**38,37**
S103	1a/16	wind;10	**-2,28**
S103	1a-p/17	wind;10	**2,09**
S104	1a-p/17	wind;10	**-0,66**
S104	1a/16	wind;10	**2,56**
S105	1a/38	wind;10	**-2,27**
S105	1a-p/39	wind;10	**2,11**
S106	1a-p/39	wind;10	**1,32**
S106	1a/16	wind;10	**-1,46**
S107	3/6	wind+ice	**-64,14**
S107	1a-p/14	wind;10	**12,94**
S108	1a-p/39	wind;10	**-0,71**
S108	1a/38	wind;10	**2,51**
S109	1a-p/14	wind;10	**-15,69**
S109	3/6	wind+ice	**60,44**
S110	1a-p/14	wind;10	**39,81**
S110	1a/7	wind;10	**-43,55**
S111	3/4	wind+ice	**-64,00**
S111	1a-p/15	wind;10	**10,32**
S112	3/4	wind+ice	**60,21**
S112	1a-p/15	wind;10	**-13,16**
S113	1a-p/15	wind;10	**37,61**
S113	1a/5	wind;10	**-42,90**
S114	1a-p/17	wind;10	**2,44**
S114	1a/16	wind;10	**-2,61**
S115	1a-p/17	wind;10	**-0,92**
S115	1a/16	wind;10	**2,79**
S116	1a-p/39	wind;10	**2,43**
S116	1a/38	wind;10	**-2,62**
S117	1a-p/17	wind;10	**1,53**
S117	1a/38	wind;10	**-1,68**
S118	1a-p/15	wind;10	**12,41**
S118	3/4	wind+ice	**-64,24**
S119	1a/38	wind;10	**2,76**
S119	1a-p/39	wind;10	**-0,94**
S120	3/4	wind+ice	**60,58**
S120	1a-p/15	wind;10	**-15,16**
S121	1a/16	wind;10	**3,15**
S121	1a-p/17	wind;10	**-0,99**

D&C ENGINEERING	Project	150 kV lijn Leiden - Zoetermeer
	Onderdeel	Berekening Mast 52
	Omschrijving	Controle berekening
	Nationale norm	EC - EN
	Auteur	MG

Staaf	BG	Geval beschrijving	N [kN]
S122	1a-p/17	wind;10	**2,64**
S122	1a/16	wind;10	**-2,83**
S123	1a-p/39	wind;10	**2,63**
S123	1a/38	wind;10	**-2,83**
S124	1a-p/17	wind;10	**1,64**
S124	1a/38	wind;10	**-1,83**
S125	1a/38	wind;10	**3,09**
S125	1a-p/39	wind;10	**-1,05**
S126	1a-p/15	wind;10	**39,16**
S126	1a/5	wind;10	**-44,20**
S127	1a/7	wind;10	**114,43**
S127	1a-p/14	wind;10	**-70,42**
S129	3/50	wind+ice	**56,84**
S129	1a-p/27	wind;10	**29,12**
S130	3/6	wind+ice	**56,80**
S130	1b-p/51	wind;-20	**30,27**
S131	1a-p/15	wind;10	**71,02**
S131	1a/5	wind;10	**-107,06**
S132	1a-p/15	wind;10	**75,18**
S132	1a/5	wind;10	**-109,87**
S133	1a/5	wind;10	**-0,20**
S133	1a-p/15	wind;10	**0,17**
S134	1a-p/14	wind;10	**-0,12**
S134	1a/7	wind;10	**0,14**
S135	1a/7	wind;10	**-90,56**
S135	1a-p/14	wind;10	**72,75**
S136	1a-p/15	wind;10	**-0,29**
S136	1a/5	wind;10	**0,98**
S137	1a-p/28	wind;10	**27,67**
S137	3/52	wind+ice	**53,98**
S138	3/31	wind+ice	**53,82**
S138	3-p/53	wind+ice	**28,85**
S139	1a-p/15	wind;10	**-66,90**
S139	1a/5	wind;10	**80,48**
S140	1a-p/14	wind;10	**73,72**
S140	1a/7	wind;10	**-93,22**
S141	1a/5	wind;10	**78,33**
S141	1a-p/15	wind;10	**-63,96**
S142	3/37	wind+ice	**56,88**
S142	1a-p/35	wind;10	**28,96**
S143	3/4	wind+ice	**56,75**
S143	1b-p/51	wind;-20	**30,24**
S144	1a-p/14	wind;10	**72,99**
S144	1a/7	wind;10	**-105,98**
S145	1a-p/14	wind;10	**76,05**
S145	1a/7	wind;10	**-108,33**
S146	1a-p/14	wind;10	**0,16**
S146	1a/7	wind;10	**-0,21**
S147	1a-p/14	wind;10	**0,16**
S147	1a/7	wind;10	**-0,20**
S148	1a-p/15	wind;10	**71,21**
S148	1a/5	wind;10	**-91,76**
S149	1a/7	wind;10	**1,10**
S149	1a-p/14	wind;10	**-0,35**
S150	1a/26	wind;10	**1,61**
S150	1a-p/27	wind;10	**-0,58**
S151	3/41	wind+ice	**53,99**
S151	1a-p/30	wind;10	**27,67**
S152	3-p/53	wind+ice	**28,88**
S152	3/31	wind+ice	**53,87**
S153	1a/7	wind;10	**78,82**
S153	1a-p/14	wind;10	**-68,14**
S154	1a-p/15	wind;10	**71,45**
S154	1a/5	wind;10	**-94,58**
S155	1a/7	wind;10	**76,85**
S155	1a-p/14	wind;10	**-64,79**
S156	1a/26	wind;10	**25,14**

Staaf	BG	Geval beschrijving	N [kN]
S156	1a-p/27	wind;10	**-24,40**
S159	3/6	wind+ice	**124,11**
S159	1a-p/27	wind;10	**65,72**
S160	3/4	wind+ice	**125,37**
S160	1a-p/35	wind;10	**65,32**
S161	1a/7	wind;10	**288,67**
S161	1a-p/14	wind;10	**-155,97**
S162	1a-p/14	wind;10	**178,66**
S162	1a/7	wind;10	**-198,75**
S164	1a-p/15	wind;10	**173,94**
S164	1a/5	wind;10	**-207,25**
S166	1a-p/28	wind;10	**69,36**
S166	3/6	wind+ice	**134,78**
S167	5a5/55	safety	**10,78**
S167	5a6/54	safety	**-17,76**
S168	5a5/55	safety	**-5,61**
S168	5a6/54	safety	**9,08**
S169	5a5/33	safety	**-17,88**
S169	5a6/56	safety	**10,66**
S170	5a5/33	safety	**9,14**
S170	5a6/56	safety	**-5,56**
S171	5a6/56	safety	**3,39**
S171	5a5/10	safety	**-72,52**
S172	5a5/57	safety	**5,15**
S172	5a6/11	safety	**-70,74**
S173	1a/5	wind;10	**1,14**
S173	3-p/43	wind+ice	**-3,84**
S175	3/6	wind+ice	**38,29**
S175	4-p/58	maintenance	**11,36**
S177	1a-p/28	wind;10	**296,68**
S177	1a/29	wind;10	**-475,06**
S178	5a9/60	safety	**6,94**
S178	5a7/59	safety	**-7,60**
S179	5a10/62	safety	**6,97**
S179	5a8/61	safety	**-7,61**
S180	5a8/64	safety	**12,27**
S180	5a7/63	safety	**-10,94**
S181	5a7/65	safety	**12,38**
S181	1a/38	wind;10	**-10,93**
S182	5a7/65	safety	**-13,55**
S182	5a8/66	safety	**11,83**
S183	5a7/65	safety	**12,18**
S183	5a8/66	safety	**-11,40**
S184	5a7/63	safety	**11,96**
S184	5a8/64	safety	**-13,45**
S185	5a8/64	safety	**12,06**
S185	5a7/63	safety	**-11,49**
S186	5a9/60	safety	**6,47**
S186	5a10/62	safety	**-46,89**
S187	5a10/62	safety	**6,42**
S187	5a9/60	safety	**-47,02**
S188	1b/67	wind;-20	**22,00**
S188	5a9/60	safety	**40,57**
S189	1b/68	wind;-20	**21,90**
S189	5a9/60	safety	**46,91**
S190	5a12/13	safety	**-17,60**
S190	5a11/69	safety	**10,78**
S191	5a12/71	safety	**9,03**
S191	5a11/70	safety	**-5,64**
S192	5a11/49	safety	**-17,74**
S192	5a12/72	safety	**10,68**
S193	5a11/12	safety	**9,07**
S193	5a12/73	safety	**-5,57**
S194	5a11/74	safety	**-69,47**
S194	5a12/73	safety	**3,38**
S195	5a12/75	safety	**-67,75**
S195	5a11/69	safety	**5,15**

D&C ENGINEERING	Project	150 kV lijn Leiden - Zoetermeer
	Onderdeel	Berekening Mast 52
	Omschrijving	Controle berekening
	Nationale norm	EC - EN
	Auteur	MG

Staaf	BG	Geval beschrijving	N [kN]
S196	3-p/20	wind+ice	**-3,84**
S196	3/6	wind+ice	**1,13**
S198	5a9/76	safety	**-10,94**
S198	1a-p/17	wind;10	**12,77**
S199	5a9/76	safety	**12,39**
S199	1a/38	wind;10	**-11,48**
S200	5a9/77	safety	**-13,59**
S200	5a10/78	safety	**11,83**
S201	5a9/77	safety	**12,20**
S201	5a10/78	safety	**-11,38**
S202	5a10/78	safety	**-13,47**
S202	5a9/77	safety	**11,96**
S203	5a9/77	safety	**-11,50**
S203	5a10/78	safety	**12,07**
S204	5a7/59	safety	**6,43**
S204	5a8/61	safety	**-46,99**
S205	5a7/59	safety	**-47,14**
S205	5a8/61	safety	**6,36**
S206	5a7/59	safety	**6,93**
S206	5a9/60	safety	**-7,61**
S207	5a8/61	safety	**6,94**
S207	5a10/62	safety	**-7,64**
S208	5a8/80	safety	**40,94**
S208	1b/79	wind;-20	**22,21**
S209	1b/68	wind;-20	**21,78**
S209	5a7/59	safety	**46,60**
S210	1a-p/15	wind;10	**47,49**
S210	1a/5	wind;10	**-82,09**
S211	3/6	wind+ice	**18,75**
S211	1a-p/14	wind;10	**-1,92**
S212	3/4	wind+ice	**18,91**
S212	1a-p/15	wind;10	**-1,82**
S213	1a-p/15	wind;10	**45,58**
S213	3/4	wind+ice	**-89,16**
S214	1a-p/17	wind;10	**2,60**
S214	1a/16	wind;10	**-2,36**
S215	1a-p/17	wind;10	**2,28**
S215	1a/16	wind;10	**-2,98**
S216	1a/38	wind;10	**-0,09**
S216	1a/38	wind;10	**0,06**
S217	1a/38	wind;10	**-0,27**
S217	1a-p/39	wind;10	**0,08**
S218	1a-p/17	wind;10	**0,12**
S218	1a/16	wind;10	**-0,23**
S219	1a-p/39	wind;10	**2,05**
S219	1a/38	wind;10	**-2,92**
S220	1a-p/39	wind;10	**2,64**
S220	1a/38	wind;10	**-2,57**
S221	1a/38	wind;10	**-2,27**
S221	1a-p/17	wind;10	**1,89**
S222	1a-p/39	wind;10	**1,89**
S222	1a/16	wind;10	**-2,35**
S223	1a/16	wind;10	**-0,09**
S223	1a-p/17	wind;10	**0,04**
S224	1a/7	wind;10	**146,94**
S224	1a-p/14	wind;10	**-133,19**
S225	1a-p/14	wind;10	**127,80**
S225	1a/7	wind;10	**-148,81**
S226	1a/5	wind;10	**151,21**
S226	1a-p/15	wind;10	**-129,09**
S227	1a/5	wind;10	**-152,88**
S227	1a-p/15	wind;10	**123,57**
S228	1a-p/28	wind;10	**43,83**
S228	3/52	wind+ice	**80,84**
S229	1a-p/27	wind;10	**-0,29**
S229	3/50	wind+ice	**-0,46**
S231	3/41	wind+ice	**80,95**

Staaf	BG	Geval beschrijving	N [kN]
S231	1a-p/39	wind;10	**43,79**
S232	3/50	wind+ice	**39,02**
S232	1a-p/27	wind;10	**21,79**
S233	1a-p/27	wind;10	**-0,26**
S233	1a/26	wind;10	**-0,46**
S235	1a-p/27	wind;10	**46,55**
S235	3/50	wind+ice	**86,63**
S236	3/41	wind+ice	**41,84**
S236	1a-p/30	wind;10	**23,21**
S237	1a-p/28	wind;10	**-0,29**
S237	3/52	wind+ice	**-0,46**
S239	1a/7	wind;10	**149,47**
S239	1a-p/14	wind;10	**-134,56**
S240	1a-p/14	wind;10	**128,06**
S240	1a/7	wind;10	**-150,52**
S241	1a/5	wind;10	**153,45**
S241	1a-p/15	wind;10	**-130,66**
S242	1a-p/15	wind;10	**124,09**
S242	1a/5	wind;10	**-154,27**
S243	1a/29	wind;10	**30,78**
S243	1a-p/28	wind;10	**-22,26**
S244	1a-p/39	wind;10	**-9,34**
S244	3/52	wind+ice	**-21,50**
S245	1a/26	wind;10	**25,93**
S245	1a-p/27	wind;10	**-23,24**
S247	1a/7	wind;10	**0,00**
S247	1a/38	wind;10	**0,00**
S248	1a/34	wind;10	**0,54**
S248	1a/7	wind;10	**-0,83**
S249	1a/16	wind;10	**0,00**
S249	1a/32	wind;10	**-0,09**
S250	1a/16	wind;10	**0,00**
S250	1a/38	wind;10	**0,00**
S252	1a-p/39	wind;10	**59,66**
S252	1a/38	wind;10	**-70,61**
S253	3/37	wind+ice	**86,62**
S253	1a-p/35	wind;10	**46,55**
S254	3/52	wind+ice	**41,77**
S254	1a-p/28	wind;10	**23,14**
S255	1a-p/28	wind;10	**-0,26**
S255	3/52	wind+ice	**-0,47**
S257	1a-p/35	wind;10	**-9,89**
S257	3/4	wind+ice	**-22,50**
S258	3/4	wind+ice	**132,55**
S258	1a-p/30	wind;10	**69,83**
S260	1a/16	wind;10	**0,00**
S260	1a/32	wind;10	**0,00**
S263	5a17/82	safety	**8,35**
S263	5a21/81	safety	**-13,47**
S264	5a13/83	safety	**-8,41**
S264	5a14/84	safety	**11,22**
S265	5a21/81	safety	**-12,98**
S265	5a17/82	safety	**8,17**
S266	5a18/85	safety	**8,48**
S266	5a13/83	safety	**-13,21**
S267	5a13/83	safety	**11,14**
S267	5a14/84	safety	**-8,49**
S268	1a/29	wind;10	**-2,97**
S268	1a-p/28	wind;10	**2,86**
S270	1a-p/39	wind;10	**-15,12**
S270	1a/38	wind;10	**46,76**
S273	5a13/83	safety	**-17,94**
S273	5a14/86	safety	**14,25**
S274	5a13/87	safety	**-8,20**
S274	5a14/84	safety	**10,53**
S275	5a13/83	safety	**-8,09**
S275	5a14/88	safety	**4,99**

D&C ENGINEERING	Project	150 kV lijn Leiden - Zoetermeer
	Onderdeel	Berekening Mast 52
	Omschrijving	Controle berekening
	Nationale norm	EC - EN
	Auteur	MG

Staaf	BG	Geval beschrijving	N [kN]
S278	5a14/84	safety	**-18,21**
S278	5a13/87	safety	**13,98**
S279	5a14/86	safety	**-8,35**
S279	5a13/83	safety	**10,38**
S280	5a13/89	safety	**4,88**
S280	5a14/84	safety	**-8,19**
S282	1b/67	wind;-20	**-4,83**
S282	5a21/90	safety	**-13,92**
S283	5a17/82	safety	**43,22**
S283	1b-p/91	wind;-20	**24,03**
S284	5a14/84	safety	**-36,35**
S284	5a15/92	safety	**7,62**
S285	5a16/93	safety	**7,86**
S285	5a13/83	safety	**-36,28**
S286	1b-p/94	wind;-20	**23,74**
S286	5a14/84	safety	**47,82**
S287	5a14/95	safety	**-1,22**
S287	1b/67	wind;-20	**-0,53**
S288	5a15/96	safety	**13,25**
S288	5a16/93	safety	**-17,59**
S289	5a13/97	safety	**24,69**
S289	5a14/2	safety	**-139,96**
S290	5a18/98	safety	**-9,62**
S290	5a21/81	safety	**11,55**
S291	5a13/83	safety	**11,64**
S291	5a17/99	safety	**-10,17**
S292	5a17/99	safety	**8,34**
S292	5a13/83	safety	**-11,83**
S293	5a13/83	safety	**2,97**
S293	5a14/84	safety	**-6,82**
S294	5a22/100	safety	**-42,03**
S294	5a21/81	safety	**8,92**
S295	5a21/102	safety	**24,67**
S295	5a22/101	safety	**-134,76**
S296	1a-p/39	wind;10	**0,10**
S296	1a/38	wind;10	**-0,26**
S297	1a-p/17	wind;10	**0,09**
S297	1a/16	wind;10	**-0,28**
S298	1a-p/17	wind;10	**-20,87**
S298	1a/38	wind;10	**45,43**
S299	5a14/84	safety	**53,53**
S299	1b/103	wind;-20	**21,60**
S300	1a/29	wind;10	**28,58**
S300	1a-p/28	wind;10	**-19,54**
S301	1a/32	wind;10	**0,54**
S301	1a/7	wind;10	**-0,83**
S302	5a21/105	safety	**14,01**
S302	5a22/104	safety	**-18,11**
S303	5a21/107	safety	**10,27**
S303	5a22/106	safety	**-8,36**
S304	5a21/81	safety	**4,88**
S304	5a22/108	safety	**-8,14**
S307	5a22/106	safety	**14,30**
S307	5a21/107	safety	**-17,82**
S308	5a22/104	safety	**10,43**
S308	5a21/105	safety	**-8,19**
S309	5a22/100	safety	**5,00**
S309	5a21/109	safety	**-8,02**
S311	1b/79	wind;-20	**-4,88**
S311	5a14/110	safety	**-14,04**
S312	5a13/111	safety	**43,18**
S312	1b-p/94	wind;-20	**24,04**
S313	5a20/113	safety	**7,86**
S313	5a21/112	safety	**-36,23**
S314	5a19/114	safety	**7,62**
S314	5a22/100	safety	**-36,34**
S315	5a22/116	safety	**48,23**

Staaf	BG	Geval beschrijving	N [kN]
S315	1b-p/115	wind;-20	**23,72**
S316	1b/79	wind;-20	**-0,51**
S316	5a22/108	safety	**-1,22**
S317	5a20/118	safety	**13,01**
S317	5a19/117	safety	**-17,69**
S318	5a22/100	safety	**11,64**
S318	5a17/99	safety	**-9,53**
S319	5a21/81	safety	**11,54**
S319	5a18/98	safety	**-10,16**
S320	5a18/98	safety	**8,54**
S320	5a21/81	safety	**-11,63**
S321	1a-p/30	wind;10	**2,19**
S321	1a/32	wind;10	**-2,22**
S322	5a14/84	safety	**2,91**
S322	5a13/83	safety	**-6,88**
S323	5a22/100	safety	**8,87**
S323	5a21/81	safety	**-41,90**
S324	5a22/100	safety	**43,30**
S324	1b-p/94	wind;-20	**20,43**
S328	1a-p/14	wind;10	**181,65**
S328	1a/7	wind;10	**-202,53**
S330	1a/5	wind;10	**0,00**
S330	1a-p/15	wind;10	**0,00**
S331	1a/7	wind;10	**1,02**
S331	1a/5	wind;10	**-0,55**
S333	1a/38	wind;10	**0,00**
S333	1a/29	wind;10	**-0,09**
S334	1a/38	wind;10	**0,00**
S334	1a-p/39	wind;10	**0,00**
S336	1a/32	wind;10	**0,00**
S336	1a/32	wind;10	**-0,26**
S340	5a22/119	safety	**28,81**
S340	5a21/112	safety	**-129,10**
S343	3/4	wind+ice	**38,41**
S343	4-p/120	maintenance	**11,32**
S355	1a-p/27	wind;10	**328,32**
S355	1a/26	wind;10	**-443,56**
S359	1a-p/35	wind;10	**47,66**
S359	1a/34	wind;10	**-85,47**
S361	3-p/20	wind+ice	**25,54**
S361	5a1/123	safety	**-49,25**
S368	1a/29	wind;10	**-195,12**
S368	1a-p/28	wind;10	**74,47**
S370	3/4	wind+ice	**-87,14**
S370	1a-p/30	wind;10	**48,17**
S372	3/6	wind+ice	**-58,86**
S372	5a1/124	safety	**36,25**
S373	3/6	wind+ice	**-57,78**
S373	5a1/124	safety	**36,99**
S377	1a/5	wind;10	**197,50**
S377	1a-p/15	wind;10	**-151,21**
S378	1a-p/14	wind;10	**-72,78**
S378	1a/7	wind;10	**86,24**
S379	1a-p/15	wind;10	**-146,71**
S379	1a/5	wind;10	**192,81**
S380	1a/7	wind;10	**91,17**
S380	1a-p/14	wind;10	**-74,22**
S381	1a/7	wind;10	**192,62**
S381	1a-p/14	wind;10	**-156,14**
S382	1a/5	wind;10	**91,34**
S382	1a-p/15	wind;10	**-71,67**
S383	1a/7	wind;10	**187,82**
S383	1a-p/14	wind;10	**-152,68**
S384	1a/5	wind;10	**91,83**
S384	1a-p/15	wind;10	**-72,24**
S388	1a-p/14	wind;10	**94,59**
S388	1a/5	wind;10	**-158,07**

Staaf	BG	Geval beschrijving	N [kN]
S390	1a-p/35	wind;10	**77,25**
S390	1a/5	wind;10	**-154,17**
S397	1a/26	wind;10	**0,90**
S397	1a/32	wind;10	**-0,99**
S399	1a-p/17	wind;10	**-21,00**
S399	1a/16	wind;10	**42,05**
S400	1a-p/17	wind;10	**8,57**
S400	5a13/83	safety	**-12,83**
S401	1a/32	wind;10	**29,71**
S401	1a-p/30	wind;10	**-21,16**
S402	1a/26	wind;10	**-194,47**
S402	1a-p/27	wind;10	**83,91**
S411	1a-p/27	wind;10	**47,38**
S411	1a/26	wind;10	**-84,82**
S413	3-p/43	wind+ice	**25,76**
S413	5a3/46	safety	**-46,85**
S417	3-p/43	wind+ice	**26,30**
S417	5a3/46	safety	**-46,10**
S418	1a-p/30	wind;10	**285,18**
S418	1a/32	wind;10	**-475,23**
S421	1a-p/30	wind;10	**75,76**
S421	1a/32	wind;10	**-196,86**
S425	5a3/47	safety	**36,25**
S425	3/4	wind+ice	**-58,72**
S426	5a3/47	safety	**36,97**
S426	3/4	wind+ice	**-57,71**
S430	1a-p/15	wind;10	**3,94**
S430	1a/5	wind;10	**-4,89**
S441	1a/7	wind;10	**79,09**
S441	1a-p/14	wind;10	**-67,93**
S446	1a-p/15	wind;10	**-66,06**
S446	1a/5	wind;10	**80,20**
S447	1a-p/14	wind;10	**48,43**
S447	1a/7	wind;10	**-80,45**
S448	3/37	wind+ice	**39,07**
S448	1a-p/35	wind;10	**21,83**
S449	1a-p/39	wind;10	**0,35**
S449	1a/38	wind;10	**-0,46**
S450	1a/5	wind;10	**0,00**
S450	1a/5	wind;10	**0,00**
S453	1a/26	wind;10	**0,00**
S453	1a-p/14	wind;10	**0,00**
S456	1a/5	wind;10	**1,17**
S456	1a-p/15	wind;10	**-0,48**
S457	1a-p/15	wind;10	**175,53**
S457	1a/5	wind;10	**-204,52**
S458	1a/5	wind;10	**1,08**
S458	1a/29	wind;10	**-0,84**
S459	1a/5	wind;10	**1,08**
S459	1a/26	wind;10	**-0,84**
S460	1a-p/28	wind;10	**0,12**
S460	1a/29	wind;10	**-4,58**
S461	1a/26	wind;10	**3,25**
S461	1a-p/27	wind;10	**-1,60**
S462	1a/29	wind;10	**3,87**
S462	1a-p/28	wind;10	**-2,17**
S463	1a/34	wind;10	**3,09**
S463	1a-p/35	wind;10	**-1,58**
S464	1a/32	wind;10	**3,75**
S464	1a-p/30	wind;10	**-1,87**
S465	5a16/125	safety	**14,25**
S465	5a15/92	safety	**-17,30**
S466	5a19/127	safety	**12,65**
S466	5a20/126	safety	**-18,05**
S467	1a-p/28	wind;10	**115,06**
S467	1a/32	wind;10	**-186,64**
S470	1a/29	wind;10	**16,00**

D&C ENGINEERING	Project	150 kV lijn Leiden - Zoetermeer
	Onderdeel	Berekening Mast 52
	Omschrijving	Controle berekening
	Nationale norm	EC - EN
	Auteur	MG

Staaf	BG	Geval beschrijving	N [kN]
S470	1a-p/27	wind;10	-12,09
S472	1a-p/27	wind;10	127,74
S472	1a/34	wind;10	-176,04
S474	1a/32	wind;10	15,89
S474	1a-p/35	wind;10	-11,97
S482	3/4	wind+ice	26,69
S482	3-p/43	wind+ice	-13,46
S483	3/4	wind+ice	38,93
S483	3-p/43	wind+ice	-23,20
S484	3/6	wind+ice	26,43
S484	3-p/20	wind+ice	-13,47
S485	3/6	wind+ice	39,02
S485	3-p/20	wind+ice	-23,10
S486	3-p/20	wind+ice	26,10
S486	5a1/123	safety	-48,49
S491	1a/7	wind;10	295,26
S491	1a-p/14	wind;10	-154,77
S492	1a-p/15	wind;10	24,97
S492	1a/5	wind;10	-172,41
S493	1a-p/14	wind;10	89,12
S493	1a/5	wind;10	-170,29
S495	1a/5	wind;10	81,49
S495	1a-p/15	wind;10	-68,12
S497	1a-p/14	wind;10	46,76
S497	3/6	wind+ice	-89,11
S503	1a/7	wind;10	116,93
S503	1a-p/14	wind;10	-75,22
S508	1b-p/94	wind;-20	41,81
S508	5a4/136	safety	75,21
S509	5a12/13	safety	18,98
S509	5a11/69	safety	-7,55
S510	5a11/49	safety	19,09
S510	5a12/72	safety	-7,45
S511	5a17/137	safety	75,26
S511	1b-p/91	wind;-20	41,81
S513	5a6/138	safety	18,98
S513	5a5/33	safety	-7,61
S514	5a6/54	safety	-7,50
S514	5a5/36	safety	19,09
S547	1a-p/14	wind;10	72,28
S547	1a/7	wind;10	-163,57
S548	1b-p/91	wind;-20	35,61
S548	5a22/119	safety	63,71
S549	5a13/139	safety	27,51
S549	5a14/84	safety	-0,49
S550	5a14/140	safety	27,74
S550	5a13/83	safety	-0,29
S551	5a12/73	safety	63,74
S551	1b-p/94	wind;-20	35,66
S552	5a21/102	safety	27,84
S552	5a22/119	safety	-0,69
S553	5a21/102	safety	-0,47
S553	5a22/119	safety	28,10
S588	1a/26	wind;10	0,00
S588	1a-p/14	wind;10	0,00
S589	1a/29	wind;10	0,00
S589	1a-p/15	wind;10	0,00
S590	1a-p/39	wind;10	0,00
S590	1a/29	wind;10	0,00
S591	1a/32	wind;10	0,00
S591	1a/38	wind;10	0,00
S592	1a-p/15	wind;10	0,00
S592	1a/32	wind;10	0,00
S593	1a/34	wind;10	0,00
S593	1a-p/14	wind;10	0,00
S594	1a-p/17	wind;10	0,00
S594	1a/34	wind;10	0,00

Staaf	BG	Geval beschrijving	N [kN]
S595	1a/26	wind;10	0,00
S595	1a-p/39	wind;10	0,00
S596	5a15/96	safety	13,84
S596	5a16/93	safety	-17,70
S597	5a15/92	safety	-17,19
S597	5a16/125	safety	13,66
S598	5a19/127	safety	13,25
S598	5a20/126	safety	-18,14
S599	5a20/118	safety	13,60
S599	5a19/117	safety	-17,79
S600	5a14/141	safety	28,71
S600	5a13/8	safety	-134,23
S601	1a-p/14	wind;10	42,16
S601	1a/7	wind;10	-160,06
S602	1a-p/14	wind;10	216,54
S602	1a/7	wind;10	-217,08
S603	1a-p/15	wind;10	209,96
S603	1a/5	wind;10	-223,71
S604	1a-p/15	wind;10	211,38
S604	1a/5	wind;10	-227,40
S605	1a-p/14	wind;10	219,84
S605	1a/7	wind;10	-220,87
S606	1a-p/15	wind;10	0,00
S606	1a/5	wind;10	0,00
S607	1a/7	wind;10	0,00
S607	1a-p/14	wind;10	0,00
S608	1a/5	wind;10	0,00
S608	1a/26	wind;10	0,00
S609	1a-p/15	wind;10	0,00
S609	1a/5	wind;10	0,00
S610	1a/16	wind;10	50,11
S610	1a-p/17	wind;10	-55,17
S611	1a-p/35	wind;10	324,53
S611	1a/34	wind;10	-448,75
S612	1a-p/39	wind;10	-49,15
S612	1a/38	wind;10	56,10
S613	1a-p/39	wind;10	-48,85
S613	1a/38	wind;10	58,25
S614	1a/16	wind;10	49,78
S614	1a-p/17	wind;10	-57,04
S615	1a-p/27	wind;10	83,08
S615	1a/26	wind;10	-231,86
S616	1a/29	wind;10	-245,34
S616	1a-p/28	wind;10	76,13
S617	1a-p/30	wind;10	77,77
S617	1a/32	wind;10	-247,14
S618	1a/34	wind;10	-233,83
S618	1a-p/35	wind;10	84,54
S619	1a-p/15	wind;10	-207,01
S619	1a/5	wind;10	224,08
S620	1a/7	wind;10	217,57
S620	1a-p/14	wind;10	-213,97
S621	1a-p/14	wind;10	-217,36
S621	1a/7	wind;10	221,48
S622	1a-p/15	wind;10	-211,06
S622	1a/5	wind;10	227,63
S623	1a/16	wind;10	-60,88
S623	1a-p/17	wind;10	69,35
S624	1a/16	wind;10	-60,45
S624	1a-p/17	wind;10	71,35
S625	1a-p/39	wind;10	59,51
S625	1a/38	wind;10	-72,26
S626	1a-p/28	wind;10	48,66
S626	3/6	wind+ice	-87,27
S627	1a-p/15	wind;10	-73,59
S627	1a/5	wind;10	117,77
S628	1a-p/14	wind;10	21,64

Staaf	BG	Geval beschrijving	N [kN]
S628	1a/7	wind;10	-55,95
S629	1a-p/15	wind;10	21,41
S629	1a/5	wind;10	-56,65
S630	1a-p/14	wind;10	-68,93
S630	1a/7	wind;10	79,78
S631	1a/7	wind;10	98,27
S631	1a-p/14	wind;10	-66,38
S632	1a/5	wind;10	99,95
S632	1a-p/15	wind;10	-65,83
S633	1a-p/15	wind;10	-66,16
S633	1a/5	wind;10	88,69
S634	1a-p/14	wind;10	-67,75
S634	1a/7	wind;10	87,57
S635	1a/5	wind;10	116,66
S635	1a-p/15	wind;10	-69,60
S636	1a-p/14	wind;10	20,75
S636	1a/7	wind;10	-55,50
S637	1a-p/15	wind;10	19,36
S637	1a/5	wind;10	-55,26
S638	1a-p/15	wind;10	-149,07
S638	1a/5	wind;10	301,64
S639	3/31	wind+ice	92,34
S639	1a-p/39	wind;10	34,03
S640	1a-p/17	wind;10	32,10
S640	3/142	wind+ice	82,71
S641	1a/5	wind;10	295,62
S641	1a-p/15	wind;10	-150,01
S642	1a-p/14	wind;10	80,57
S642	1a/7	wind;10	-151,33
S643	1a-p/14	wind;10	30,72
S643	1a/7	wind;10	-170,13
S644	1a/5	wind;10	-161,74
S644	1a-p/35	wind;10	36,56
S645	1a-p/15	wind;10	66,19
S645	1a/5	wind;10	-166,05
S646	1a-p/35	wind;10	81,08
S646	1a/34	wind;10	-188,73
S648	5a22/101	safety	61,03
S648	1b-p/143	wind;-20	31,82
S649	1b-p/143	wind;-20	-19,19
S649	5a22/119	safety	-36,78
S650	5a21/81	safety	60,73
S650	5a20/144	safety	33,72
S651	5a20/144	safety	-20,31
S651	5a21/81	safety	-36,63
S652	5a14/2	safety	63,85
S652	1b/68	wind;-20	32,94
S653	1b/68	wind;-20	-20,99
S653	5a14/2	safety	-40,70
S654	5a13/8	safety	63,63
S654	1b/145	wind;-20	35,35
S655	1b/146	wind;-20	-22,58
S655	5a13/8	safety	-40,61
S656	5a14/2	safety	61,07
S656	1b-p/143	wind;-20	31,83
S657	1b-p/143	wind;-20	-19,19
S657	5a14/2	safety	-36,83
S658	5a13/8	safety	60,74
S658	5a16/147	safety	33,69
S659	5a16/147	safety	-20,29
S659	5a13/8	safety	-36,61
S660	5a9/148	safety	70,71
S660	1b/103	wind;-20	36,98
S661	1b/103	wind;-20	-22,33
S661	5a9/148	safety	-42,76
S662	5a10/149	safety	70,85
S662	1b/146	wind;-20	39,39

D&C ENGINEERING	Project	150 kV lijn Leiden - Zoetermeer
	Onderdeel	Berekening Mast 52
	Omschrijving	Controle berekening
	Nationale norm	EC - EN
	Auteur	MG

Staaf	BG	Geval beschrijving	N [kN]
S663	1b/146	wind;-20	**-23,79**
S663	5a10/149	safety	**-42,84**
S664	5a7/151	safety	**70,49**
S664	1b/150	wind;-20	**36,86**
S665	1b/68	wind;-20	**-22,07**
S665	5a7/151	safety	**-42,19**
S666	1b/152	wind;-20	**39,27**
S666	5a8/153	safety	**70,64**
S667	1b/152	wind;-20	**-23,51**
S667	5a8/153	safety	**-42,28**
SB1	1a/38	wind;10	**0,00**
SB1	1a-p/28	wind;10	**0,00**
SB2	1a-p/35	wind;10	**0,00**
SB2	1a/7	wind;10	**0,00**
SB3	1a/29	wind;10	**-0,10**
SB3	1a-p/28	wind;10	**0,00**
SB4	1a/29	wind;10	**0,00**
SB4	1a/29	wind;10	**-0,10**
SB17	1a-p/28	wind;10	**0,00**
SB17	1a/38	wind;10	**0,00**
SB18	1a/7	wind;10	**0,00**
SB18	1a-p/35	wind;10	**0,00**
SB19	1a/29	wind;10	**-0,10**
SB19	1a/38	wind;10	**0,00**
SB20	1a/7	wind;10	**0,00**
SB20	1a/29	wind;10	**-0,10**
SB33	1a/38	wind;10	**0,00**
SB33	1a-p/28	wind;10	**0,00**
SB34	1a-p/35	wind;10	**0,00**
SB34	1a/7	wind;10	**0,00**
SB35	1a/38	wind;10	**0,00**
SB35	1a/29	wind;10	**-0,11**
SB36	1a/29	wind;10	**-0,11**
SB36	1a/7	wind;10	**0,00**
SB49	1a-p/28	wind;10	**0,00**
SB49	1a/29	wind;10	**0,00**
SB50	1a/29	wind;10	**0,00**
SB50	1a/29	wind;10	**-0,08**
SB51	1a/32	wind;10	**0,00**
SB51	1a/32	wind;10	**0,00**
SB52	1a/32	wind;10	**0,00**
SB52	1a/32	wind;10	**-0,08**
SB53	1a-p/30	wind;10	**0,00**
SB53	1a/32	wind;10	**0,00**
SB54	1a/32	wind;10	**0,00**
SB54	1a/32	wind;10	**-0,08**
SB55	1a/34	wind;10	**0,00**
SB55	1a/34	wind;10	**0,00**
SB56	1a/34	wind;10	**0,00**
SB56	1a/34	wind;10	**-0,08**
SB57	1a-p/35	wind;10	**0,00**
SB57	1a/34	wind;10	**0,00**
SB58	1a/34	wind;10	**0,00**
SB58	1a/34	wind;10	**-0,08**
SB59	1a/26	wind;10	**0,00**
SB59	1a/26	wind;10	**0,00**
SB60	1a/26	wind;10	**0,00**
SB60	1a/26	wind;10	**-0,08**
SB61	1a-p/27	wind;10	**0,00**
SB61	1a/26	wind;10	**0,00**
SB62	1a/26	wind;10	**0,00**
SB62	1a/26	wind;10	**-0,08**
SB63	1a/29	wind;10	**0,00**
SB63	1a/29	wind;10	**0,00**
SB64	1a/29	wind;10	**0,00**
SB64	1a/29	wind;10	**-0,08**
SB65	1a/32	wind;10	**0,00**

Staaf	BG	Geval beschrijving	N [kN]
SB65	1a-p/30	wind;10	**0,00**
SB66	1a/16	wind;10	**0,00**
SB66	1a-p/17	wind;10	**0,00**
SB67	1a/34	wind;10	**0,00**
SB67	1a-p/35	wind;10	**0,00**
SB68	1a/7	wind;10	**0,00**
SB68	1a-p/14	wind;10	**0,00**
SB69	1a/26	wind;10	**0,00**
SB69	1a-p/14	wind;10	**0,00**
SB70	1a/32	wind;10	**0,00**
SB70	1a-p/39	wind;10	**0,00**
SB71	1a/29	wind;10	**0,00**
SB71	1a-p/28	wind;10	**0,00**
SB72	1a/5	wind;10	**0,00**
SB72	1a-p/15	wind;10	**0,00**
SB73	1a/29	wind;10	**0,00**
SB73	1a/26	wind;10	**-0,08**
SB74	1a/34	wind;10	**0,00**
SB74	1a/26	wind;10	**-0,08**
SB75	1a/32	wind;10	**0,00**
SB75	1a/29	wind;10	**-0,08**
SB76	1a/26	wind;10	**0,00**
SB76	1a/29	wind;10	**-0,08**
SB77	1a/34	wind;10	**0,00**
SB77	1a/32	wind;10	**-0,08**
SB78	1a/29	wind;10	**0,00**
SB78	1a/32	wind;10	**-0,08**
SB79	1a/26	wind;10	**0,00**
SB79	1a/34	wind;10	**-0,08**
SB80	1a/32	wind;10	**0,00**
SB80	1a/34	wind;10	**-0,08**
SB81	1a/32	wind;10	**0,00**
SB81	1a/32	wind;10	**-0,07**
SB82	1a-p/14	wind;10	**0,00**
SB82	1a/7	wind;10	**0,00**
SB83	1a/32	wind;10	**0,00**
SB83	1a/32	wind;10	**-0,07**
SB84	1a-p/39	wind;10	**0,00**
SB84	1a/38	wind;10	**0,00**
SB85	1a/34	wind;10	**0,00**
SB85	1a/34	wind;10	**-0,07**
SB86	1a-p/39	wind;10	**0,00**
SB86	1a/38	wind;10	**0,00**
SB87	1a/34	wind;10	**0,00**
SB87	1a/34	wind;10	**-0,07**
SB88	1a-p/15	wind;10	**0,00**
SB88	1a/5	wind;10	**0,00**
SB89	1a/26	wind;10	**0,00**
SB89	1a/26	wind;10	**-0,07**
SB90	1a-p/15	wind;10	**0,00**
SB90	1a/5	wind;10	**0,00**
SB91	1a/26	wind;10	**0,00**
SB91	1a/26	wind;10	**-0,07**
SB92	1a-p/17	wind;10	**0,00**
SB92	1a/16	wind;10	**0,00**
SB93	1a/29	wind;10	**0,00**
SB93	1a/29	wind;10	**-0,07**
SB94	1a-p/17	wind;10	**0,00**
SB94	1a/16	wind;10	**0,00**
SB95	1a/29	wind;10	**0,00**
SB95	1a/29	wind;10	**-0,07**
SB96	1a-p/14	wind;10	**0,00**
SB96	1a/7	wind;10	**0,00**
SB97	1a-p/14	wind;10	**0,00**
SB97	1a/7	wind;10	**0,00**
SB98	1a/16	wind;10	**0,00**
SB98	1a-p/17	wind;10	**0,00**

Staaf	BG	Geval beschrijving	N [kN]
SB99	1a-p/39	wind;10	**0,00**
SB99	1a/38	wind;10	**0,00**
SB100	1a/7	wind;10	**0,00**
SB100	1a-p/14	wind;10	**0,00**
SB101	1a-p/15	wind;10	**0,00**
SB101	1a/5	wind;10	**0,00**
SB102	1a/38	wind;10	**0,00**
SB102	1a-p/39	wind;10	**0,00**
SB103	1a-p/17	wind;10	**0,00**
SB103	1a/16	wind;10	**0,00**
SB104	1a/5	wind;10	**0,00**
SB104	1a-p/15	wind;10	**0,00**
SB105	1a/29	wind;10	**0,00**
SB105	1a/29	wind;10	**-0,08**
SB106	1a/34	wind;10	**0,00**
SB106	1a/5	wind;10	**-0,08**
SB107	1a/32	wind;10	**0,00**
SB107	1a/32	wind;10	**-0,08**
SB108	1a/26	wind;10	**0,00**
SB108	1a/16	wind;10	**-0,08**
SB109	1a/34	wind;10	**0,00**
SB109	1a/34	wind;10	**-0,08**
SB110	1a/29	wind;10	**0,00**
SB110	1a/7	wind;10	**-0,08**
SB111	1a/26	wind;10	**0,00**
SB111	1a/26	wind;10	**-0,08**
SB112	1a/32	wind;10	**0,00**
SB112	1a/32	wind;10	**-0,08**
SB113	1a/5	wind;10	**0,00**
SB113	1a/5	wind;10	**-0,07**
SB114	1a/5	wind;10	**0,00**
SB114	1a-p/15	wind;10	**0,00**
SB115	1a/32	wind;10	**0,00**
SB115	1a/32	wind;10	**-0,07**
SB116	1a-p/39	wind;10	**0,00**
SB116	1a/38	wind;10	**0,00**
SB117	1a/34	wind;10	**0,00**
SB117	1a/16	wind;10	**-0,07**
SB118	1a/16	wind;10	**0,00**
SB118	1a-p/17	wind;10	**0,00**
SB119	1a/5	wind;10	**0,00**
SB119	1a/5	wind;10	**-0,07**
SB120	1a-p/15	wind;10	**0,00**
SB120	1a/5	wind;10	**0,00**
SB121	1a/7	wind;10	**0,00**
SB121	1a/7	wind;10	**-0,07**
SB122	1a/7	wind;10	**0,00**
SB122	1a-p/14	wind;10	**0,00**
SB123	1a/16	wind;10	**0,00**
SB123	1a/16	wind;10	**-0,07**
SB124	1a-p/17	wind;10	**0,00**
SB124	1a/16	wind;10	**0,00**
SB125	1a/29	wind;10	**0,00**
SB125	1a/38	wind;10	**-0,07**
SB126	1a/38	wind;10	**0,00**
SB126	1a-p/39	wind;10	**0,00**
SB127	1a/7	wind;10	**0,00**
SB127	1a/7	wind;10	**-0,07**
SB128	1a-p/14	wind;10	**0,00**
SB128	1a/7	wind;10	**0,00**
SB129	1a/5	wind;10	**0,00**
SB129	1a-p/15	wind;10	**0,00**
SB130	1a/32	wind;10	**0,00**
SB130	1a/29	wind;10	**-0,08**
SB131	1a/5	wind;10	**0,00**
SB131	1a-p/15	wind;10	**0,00**
SB132	1a/29	wind;10	**0,00**

D&C ENGINEERING	Project	150 kV lijn Leiden - Zoetermeer
	Onderdeel	Berekening Mast 52
	Omschrijving	Controle berekening
	Nationale norm	EC - EN
	Auteur	MG

Staaf	BG	Geval beschrijving	N [kN]
SB132	1a/32	wind;10	**-0,08**
SB133	1a/16	wind;10	**0,00**
SB133	1a-p/17	wind;10	**0,00**
SB134	1a/34	wind;10	**0,00**
SB134	1a/32	wind;10	**-0,08**
SB135	1a/16	wind;10	**0,00**
SB135	1a-p/17	wind;10	**0,00**
SB136	1a/32	wind;10	**0,00**
SB136	1a/34	wind;10	**-0,08**
SB137	1a/7	wind;10	**0,00**
SB137	1a/5	wind;10	**0,00**
SB138	1a/26	wind;10	**0,00**
SB138	1a/34	wind;10	**-0,08**
SB139	1a/7	wind;10	**0,00**
SB139	1a/5	wind;10	**0,00**
SB140	1a/34	wind;10	**0,00**
SB140	1a/26	wind;10	**-0,08**
SB141	1a/38	wind;10	**0,00**
SB141	1a-p/39	wind;10	**0,00**
SB142	1a/29	wind;10	**0,00**
SB142	1a/26	wind;10	**-0,08**
SB143	1a/38	wind;10	**0,00**
SB143	1a-p/39	wind;10	**0,00**
SB144	1a/26	wind;10	**0,00**
SB144	1a/29	wind;10	**-0,08**
SB145	1a/7	wind;10	**0,00**
SB145	1a-p/35	wind;10	**0,00**
SB146	1a/38	wind;10	**0,00**
SB146	1a-p/28	wind;10	**0,00**
SB147	1a/38	wind;10	**0,00**
SB147	1a/29	wind;10	**-0,10**
SB148	1a/7	wind;10	**0,00**
SB148	1a/29	wind;10	**-0,10**
SB149	1a/38	wind;10	**0,00**
SB149	1a/32	wind;10	**-0,11**
SB150	1a/38	wind;10	**0,00**
SB150	1a-p/27	wind;10	**0,00**
SB151	1a/38	wind;10	**0,00**
SB151	1a-p/27	wind;10	**0,00**
SB152	1a/38	wind;10	**0,00**
SB152	1a/32	wind;10	**-0,10**
SB153	1a/38	wind;10	**0,00**
SB153	1a/32	wind;10	**-0,10**

Staaf	BG	Geval beschrijving	N [kN]
SB154	1a/32	wind;10	**0,00**
SB154	1a/32	wind;10	**-0,10**
SB155	1a/38	wind;10	**0,00**
SB155	1a-p/27	wind;10	**0,00**
SB156	1a/38	wind;10	**0,00**
SB156	1a-p/27	wind;10	**0,00**
SB157	1a/26	wind;10	**0,00**
SB157	1a/5	wind;10	**0,00**
SB158	1a/26	wind;10	**0,00**
SB158	1a/5	wind;10	**0,00**
SB159	1a-p/15	wind;10	**0,00**
SB159	1a/32	wind;10	**-0,10**
SB160	1a/26	wind;10	**0,00**
SB160	1a/5	wind;10	**0,00**
SB161	1a/5	wind;10	**0,00**
SB161	1a/32	wind;10	**-0,10**
SB162	1a/26	wind;10	**0,00**
SB162	1a/5	wind;10	**0,00**
SB163	1a/5	wind;10	**0,00**
SB163	1a/32	wind;10	**-0,10**
SB164	1a/5	wind;10	**0,00**
SB164	1a/32	wind;10	**-0,11**
SB165	1a/5	wind;10	**0,00**
SB165	1a/34	wind;10	**-0,11**
SB166	1a/5	wind;10	**0,00**
SB166	1a/34	wind;10	**0,00**
SB167	1a/5	wind;10	**0,00**
SB167	1a/34	wind;10	**0,00**
SB168	1a/5	wind;10	**0,00**
SB168	1a/34	wind;10	**-0,10**
SB169	1a/5	wind;10	**0,00**
SB169	1a/34	wind;10	**-0,10**
SB170	1a/5	wind;10	**0,00**
SB170	1a/34	wind;10	**-0,10**
SB171	1a/5	wind;10	**0,00**
SB171	1a/34	wind;10	**0,00**
SB172	1a/5	wind;10	**0,00**
SB172	1a/34	wind;10	**0,00**
SB173	1a/29	wind;10	**0,00**
SB173	1a/16	wind;10	**0,00**
SB174	1a/29	wind;10	**0,00**
SB174	1a/16	wind;10	**0,00**
SB175	1a-p/35	wind;10	**0,00**

Staaf	BG	Geval beschrijving	N [kN]
SB175	1a/34	wind;10	**-0,10**
SB176	1a/29	wind;10	**0,00**
SB176	1a/16	wind;10	**0,00**
SB177	1a/16	wind;10	**0,00**
SB177	1a/34	wind;10	**-0,10**
SB178	1a/29	wind;10	**0,00**
SB178	1a/16	wind;10	**0,00**
SB179	1a/16	wind;10	**0,00**
SB179	1a/34	wind;10	**-0,10**
SB180	1a/16	wind;10	**0,00**
SB180	1a/34	wind;10	**-0,11**
SB181	1a/16	wind;10	**0,00**
SB181	1a/26	wind;10	**-0,11**
SB182	1a/16	wind;10	**0,00**
SB182	1a/26	wind;10	**0,00**
SB183	1a/16	wind;10	**0,00**
SB183	1a/26	wind;10	**0,00**
SB184	1a/16	wind;10	**0,00**
SB184	1a/26	wind;10	**-0,10**
SB185	1a/16	wind;10	**0,00**
SB185	1a/26	wind;10	**-0,10**
SB186	1a/16	wind;10	**0,00**
SB186	1a/26	wind;10	**-0,10**
SB187	1a/16	wind;10	**0,00**
SB187	1a/26	wind;10	**0,00**
SB188	1a/16	wind;10	**0,00**
SB188	1a/26	wind;10	**0,00**
SB189	1a-p/27	wind;10	**0,00**
SB189	1a/7	wind;10	**0,00**
SB190	1a-p/27	wind;10	**0,00**
SB190	1a/7	wind;10	**0,00**
SB191	1a-p/14	wind;10	**0,00**
SB191	1a/26	wind;10	**-0,10**
SB192	1a-p/27	wind;10	**0,00**
SB192	1a/7	wind;10	**0,00**
SB193	1a/7	wind;10	**0,00**
SB193	1a/26	wind;10	**-0,10**
SB194	1a-p/27	wind;10	**0,00**
SB194	1a/7	wind;10	**0,00**
SB195	1a/7	wind;10	**0,00**
SB195	1a/26	wind;10	**-0,10**
SB196	1a/7	wind;10	**0,00**
SB196	1a/26	wind;10	**-0,11**

11.2. Reacties

Lineaire berekening, Extreem : Knoop
Selectie : Alle
Klasse : All UGT

Steunpunt	BG	Rx [kN]	Ry [kN]	Rz [kN]	Mx [kNm]	My [kNm]	Mz [kNm]
Sn1/N1	1a-p/28	**-109,51**	**-117,80**	**-561,37**	0,00	0,00	0,00
Sn1/N1	1a/29	**162,34**	**169,61**	**822,87**	0,00	0,00	0,00
Sn1/N1	1a/154	29,16	28,67	143,91	**0,00**	**0,00**	**0,00**
Sn2/N3	1a/32	**-163,22**	**168,84**	**823,26**	0,00	0,00	0,00
Sn2/N3	1a-p/30	**107,06**	**-114,55**	**-545,81**	0,00	0,00	0,00
Sn2/N3	1a/154	-29,18	28,68	143,95	**0,00**	**0,00**	**0,00**
Sn3/N7	1a/34	**-153,53**	**-162,62**	**778,67**	0,00	0,00	0,00
Sn3/N7	1a-p/35	**118,87**	**124,20**	**-605,70**	0,00	0,00	0,00
Sn3/N7	1a/154	-20,87	-22,86	104,38	**0,00**	**0,00**	**0,00**
Sn4/N6	1a-p/27	**-117,96**	**124,94**	**-605,31**	0,00	0,00	0,00
Sn4/N6	1a/26	**149,34**	**-160,93**	**762,48**	0,00	0,00	0,00
Sn4/N6	1a/154	20,88	-22,89	104,42	**0,00**	**0,00**	**0,00**

11.3. Resultante op Fundering

Lineaire berekening, Extreem : Nee
Selectie : Alle
Klasse : All UGT

BG	Steunpunt	Extreem	horiz. component [kN]	resultante [kN]	Hoek [deg]	helling(afschot) [-]	Rx [kN]	Ry [kN]	Rz [kN]
1a-p/28	Sn1/N1	Rx	160,84	583,95	2,09	-3,49	-109,51	-117,80	-561,37
1a/29	Sn1/N1	Rx	234,78	855,71	-178,75	3,50	162,34	169,61	822,87
1a-p/28	Sn1/N1	Ry	160,84	583,95	2,09	-3,49	-109,51	-117,80	-561,37
1a/29	Sn1/N1	Ry	234,78	855,71	-178,75	3,50	162,34	169,61	822,87
1a-p/28	Sn1/N1	Rz	160,84	583,95	2,09	-3,49	-109,51	-117,80	-561,37
1a/29	Sn1/N1	Rz	234,78	855,71	-178,75	3,50	162,34	169,61	822,87
1a/32	Sn2/N3	Rx	195,78	550,71	-101,48	-2,63	-163,22	-108,11	-514,74
1a-p/30	Sn2/N3	Rx	194,51	815,72	101,61	4,07	107,06	162,40	792,19
1a-p/27	Sn2/N3	Ry	194,33	579,37	-98,88	-2,81	-156,97	-114,55	-545,81
1a/26	Sn2/N3	Ry	196,65	846,42	104,16	4,19	100,81	168,84	823,26
1a-p/27	Sn2/N3	Rz	194,33	579,37	-98,88	-2,81	-156,97	-114,55	-545,81
1a/26	Sn2/N3	Rz	196,65	846,42	104,16	4,19	100,81	168,84	823,26
1a/34	Sn3/N7	Rx	223,65	616,67	-178,35	-2,57	-153,53	-162,62	-574,69
1a-p/35	Sn3/N7	Rx	171,92	767,17	1,26	4,35	118,87	124,20	747,66
1a/34	Sn3/N7	Ry	223,65	616,67	-178,35	-2,57	-153,53	-162,62	-574,69
1a-p/35	Sn3/N7	Ry	171,92	767,17	1,26	4,35	118,87	124,20	747,66
1a-p/28	Sn3/N7	Rz	214,67	642,61	-178,32	-2,82	-147,28	-156,18	-605,70
1a/29	Sn3/N7	Rz	162,94	795,54	1,28	4,78	112,62	117,76	778,67
1a-p/27	Sn4/N6	Rx	194,37	635,75	97,63	-3,11	-117,96	-154,48	-605,31
1a/26	Sn4/N6	Rx	190,64	785,95	-96,57	4,00	149,34	118,49	762,48
1a/32	Sn4/N6	Ry	195,90	606,78	100,23	-2,93	-111,71	-160,93	-574,29
1a-p/30	Sn4/N6	Ry	189,95	755,72	-93,87	3,85	143,08	124,94	731,46
1a-p/27	Sn4/N6	Rz	194,37	635,75	97,63	-3,11	-117,96	-154,48	-605,31
1a/26	Sn4/N6	Rz	190,64	785,95	-96,57	4,00	149,34	118,49	762,48

11.4. Controle UNP profilen

11.4.1. Traverse 1 en 2 - onderrand

Lineaire berekening, Extreem : Doorsnede
Selectie : Benoemde selectie - Onderrand Trav. 1en 2
Klasse : All UGT

Staalcontrole							
Staaf	css	BG	mat	dx [m]	Algehele toetsing [-]	Doorsnedetoetsing [-]	Stabiliteittoetsing [-]
S289	CS144 - UNP160	5a14/2	S 235	2,943	0,83	0,64	0,83

Lineaire berekening, Extreem : Doorsnede
Selectie : Benoemde selectie - Onderrand Trav. 1en 2
Klasse : All UGT

Staalcontrole

EN 1993-1-1 Norm Controle
Nationale bijlage: Nederlandse NEN-EN NA

Staaf	**8,015**	**UNP160**	**S**	**5a14/2**	**0,83**
S289	**m**		**235**		**-**

Partiële veiligheidsfactoren	
Gamma M0 voor weerstand van doorsneden	1,00
Gamma M1 voor weerstand tegen instabiliteit	1,00
Gamma M2 voor weerstand van netto-doorsneden	1,25

Materiaal		
Vloeisterkte fy	235,0	MPa
Uiterste sterkte fu	360,0	MPa
Bouwwijze	Gewalst	

...::DOORSNEDE CONTROLE::...

Classificatie voor doorsnede-ontwerp
Volgens EN 1993-1-1 artikel 5.5.2
Classificatie van interne drukonderdelen
Volgens EN 1993-1-1 tabel 5.2 blad 1

Maximale breedte/dikte-verhouding	15,73
Grenswaarde klasse 1	33,00
Grenswaarde klasse 2	38,00
Grenswaarde klasse 3	43,99

=> Interne drukonderdelen klasse 1
Classificatie van uitkragende flenzen
Volgens EN 1993-1-1 tabel 5.2 blad 2

Maximale breedte/dikte-verhouding	4,48
Grenswaarde klasse 1	9,00
Grenswaarde klasse 2	10,00
Grenswaarde klasse 3	19,17

=> Uitkragende flenzen klasse 1
=> Doorsnede geclassificeerd als klasse 1 voor doorsnede-ontwerp
Kritische controle op positie 2.943 m

Interne krachten	Berekende	Eenheid
N,Ed	-95,83	kN
Vy,Ed	10,57	kN
Vz,Ed	1,72	kN
T,Ed	0,02	kNm
My,Ed	-3,69	kNm
Mz,Ed	-2,98	kNm

Drukcontrole
Volgens EN 1993-1-1 artikel 6.2.4 en formule (6.9)

A	2,4000e-03	m^2
Nc,Rd	564,00	kN
Eenheidscontrole	0,17	-

Torsiecontrole
Volgens EN 1993-1-1 artikel 6.2.7 en formule (6.23)

Tau,t,Ed	2,4	MPa
Tau,Rd	135,7	MPa
Eenheidscontrole	0,02	-

Opmerking: De eenheidscontrole voor torsie is lager dan de grenswaarde van 0,05. Hierdoor wordt torsie beschouwd als niet-significant en wordt deze genegeerd in de gecombineerde controles.

Staalcontrole

Afschuivingscontrole voor Vy

Volgens EN 1993-1-1 artikel 6.2.6 en formule (6.17)

Eta	1,20	
Av	1,3650e-03	m^2
Vpl,y,Rd	185,20	kN
Eenheidscontrole	0,06	-

Afschuivingscontrole voor Vz

Volgens EN 1993-1-1 artikel 6.2.6 en formule (6.17)

Eta	1,20	
Av	1,2240e-03	m^2
Vpl,z,Rd	166,07	kN
Eenheidscontrole	0,01	-

Controle buigend moment voor My

Volgens EN 1993-1-1 artikel 6.2.5 en formule (6.12),(6.13)

Wpl,y	1,3760e-04	m^3
Mpl,y,Rd	32,34	kNm
Eenheidscontrole	0,11	-

Controle buigend moment voor Mz

Volgens EN 1993-1-1 artikel 6.2.5 en formule (6.12),(6.13)

Wpl,z	3,5200e-05	m^3
Mpl,z,Rd	8,27	kNm
Eenheidscontrole	0,36	-

Controle gecombineerde buiging, axiale kracht en afschuifkracht

Volgens EN 1993-1-1 artikel 6.2.1 en formule (6.2)

Npl,Rd	564,00	kN
Mpl,y,Rd	32,34	kNm
Mpl,z,Rd	8,27	kNm

Eenheidscontrole (6.2) = 0,17 + 0,11 + 0,36 = 0,64 -

Opmerking: Er is geen specifieke interactieformule volgens EN 1993-1-1 artikel 6.2.9.1 van toepassing.
Daarom wordt de plastisch lineaire som volgens EN 1993-1-1 artikel 6.2.1(7) getoetst.
Opmerking: Aangezien de afschuifkrachten minder dan de helft van de plastische afschuifweerstanden bedragen, wordt het effect ervan op de momentweerstanden genegeerd.

De staaf voldoet aan de doorsnedecontrole.

...::STABILITEITSCONTROLE::...

Classificatie voor staafknikontwerp

Beslissende positie voor stabiliteitsclassificatie: 2,943 m

Classificatie van interne drukonderdelen

Volgens EN 1993-1-1 tabel 5.2 blad 1

Maximale breedte/dikte-verhouding	15,73
Grenswaarde klasse 1	33,00
Grenswaarde klasse 2	38,00
Grenswaarde klasse 3	43,99

=> Interne drukonderdelen klasse 1

Classificatie van uitkragende flenzen

Volgens EN 1993-1-1 tabel 5.2 blad 2

Maximale breedte/dikte-verhouding	4,48
Grenswaarde klasse 1	9,00
Grenswaarde klasse 2	10,00
Grenswaarde klasse 3	19,17

=> Uitkragende flenzen klasse 1
=> Doorsnede geclassificeerd als klasse 1 voor staafknikontwerp

Buigingsknik Controle

Volgens artikel EN 1993-1-1 : 6.3.1.1. en formule (6.46)

Knikparameters	yy	zz	
Zijd. flex. type	geschoord	geschoord	
Systeemlengte L	5.073	0.360	m
lef/lsys k	1.00	1.00	
Kniklengte Lcr	5.050	0.360	m
Kritische Euler belastingen Ncr	751.90	13647.68	kN
Slankheid	81.34	19.09	
Relatieve slankheid Lambda	0.87	0.20	
Limiet slankheid Lambda,0	0.20	0.20	
Knikkromme	c	c	
Imperfectie Alpha	0.49	0.49	
Reductie factor Chi	0.62	1.00	
Knikweerstand Nb,Rd	350.13	563.05	kN

Tabel van waarden		
A	2.4000e-03	m^2

Staalcontrole

Tabel van waarden		
Knikweerstand Nb,Rd	350.13	kN
Eenheidscontrole	0.27	-

Torsieknikcontrole

Volgens artikel EN 1993-1-1 : 6.3.1.1. en formule (6.46)

Tabel van waarden		
Torsieknik lengte	0.360	m
Ncr,T	11372.81	kN
Ncr,TF	737.76	kN
Relatieve slankheid Lambda,T	0.87	
Limiet slankheid Lambda,0	0.20	
Knikkromme	c	
Imperfectie Alpha	0.49	
A	2.4000e-03	m^2
Reductie factor Chi	0.62	
Knikweerstand Nb,Rd	347.24	kN
Eenheidscontrole	0.28	-

Kipcontrole

Volgens artikel EN 1993-1-1 : 6.3.2.1. en formule (6.54)

Kip Parameters		
Methode voor kipcurve	Art. 6.3.2.2.	
Wy	1.1600e-04	m^3
Elastisch critisch moment Mcr	1034.71	kNm
Relatieve slankheid Lambda,LT	0.16	
Limiet slankheid Lambda,LT,0	0.40	

Mcr Parameters		
Kiplengte	0.360	m
k	1.00	
kw	1.00	
C1	1.09	
C2	0.00	
C3	1.00	

De slankheid of het buigend moment is van die aard dat een kiptoetsing niet dient uitgevoerd te worden volgens EN 1993-1-1 artikel 6.3.2.2(4)

Controle druk en buiging

Volgens artikel EN 1993-1-1 : 6.3.3. en formule (6.61), (6.62)

Interactie Methode 2

Tabel van waarden		
kyy	0.457	
kyz	0.603	
kzy	0.997	
kzz	0.603	
Delta My	0.00	kNm
Delta Mz	0.00	kNm
A	2.4000e-03	m^2
Wy	1.1600e-04	m^3
Wz	1.8300e-05	m^3
NRk	564.00	kN
My,Rk	27.26	kNm
Mz,Rk	4.30	kNm
My,Ed	-3.69	kNm
Mz,Ed	-2.98	kNm
Interactie Methode 2		
Psi y	-0.012	
Psi z	-0.279	
Cmy	0.400	
Cmz	0.591	
CmLT	0.933	

Eenheidscontrole (6.61) = 0.27 + 0.06 + 0.42 = 0.75

Eenheidscontrole (6.62) = 0.28 + 0.13 + 0.42 = 0.83

Plooicontrole

in knikveld 1

Volgens artikel EN 1993-1-5 : 5. & 7.1. en formule (5.10) & (7.1)

Tabel van waarden	
hw/t	18.533

De slankheid van het lijf is van die aard dat de Plooicontrole niet dient uitgevoerd te worden.

De staaf voldoet aan de stabiliteitscontrole.

11.4.2. Traverse 2 en 3 - onderrand

Lineaire berekening, Extreem : Doorsnede
Selectie : Benoemde selectie - Onderrand Trav. 3 en 4
Klasse : All UGT

D&C ENGINEERING	Project	150 kV lijn Leiden - Zoetermeer
	Onderdeel	Berekening Mast 52
	Omschrijving	Controle berekening
	Nationale norm	EC - EN
	Auteur	MG

Staalcontrole							
Staaf	css	BG	mat	dx [m]	Algehele toetsing [-]	Doorsnedetoetsing [-]	Stabiliteittoetsing [-]
S171	CS101 - UNP120	5a5/10	S 235	0,000	0,30	0,20	0,30

Lineaire berekening, Extreem : Doorsnede
Selectie : Benoemde selectie - Onderrand Trav. 3 en 4
Klasse : All UGT

EN 1993-1-1 Norm Controle

Nationale bijlage: Nederlandse NEN-EN NA

Staaf	**3,073**	**UNP120**	**S**	**5a5/10**	**0,30**
S171	**m**		**235**		**-**

Partiële veiligheidsfactoren	
Gamma M0 voor weerstand van doorsneden	1,00
Gamma M1 voor weerstand tegen instabiliteit	1,00
Gamma M2 voor weerstand van netto-doorsneden	1,25

Materiaal		
Vloeisterkte fy	235,0	MPa
Uiterste sterkte fu	360,0	MPa
Bouwwijze	Gewalst	

...::DOORSNEDE CONTROLE::...

Classificatie voor doorsnede-ontwerp

Volgens EN 1993-1-1 artikel 5.5.2

Classificatie van interne drukonderdelen

Volgens EN 1993-1-1 tabel 5.2 blad 1

Maximale breedte/dikte-verhouding	12,00
Grenswaarde klasse 1	33,00
Grenswaarde klasse 2	38,00
Grenswaarde klasse 3	44,59

=> Interne drukonderdelen klasse 1

Classificatie van uitkragende flenzen

Volgens EN 1993-1-1 tabel 5.2 blad 2

Maximale breedte/dikte-verhouding	4,33
Grenswaarde klasse 1	9,00
Grenswaarde klasse 2	10,00
Grenswaarde klasse 3	13,89

=> Uitkragende flenzen klasse 1

=> Doorsnede geclassificeerd als klasse 1 voor doorsnede-ontwerp

Kritische controle op positie 0.000 m

Interne krachten	Berekende	Eenheid
N,Ed	-72,52	kN
Vy,Ed	0,00	kN
Vz,Ed	0,45	kN
T,Ed	0,00	kNm
My,Ed	-0,36	kNm
Mz,Ed	-0,01	kNm

Drukcontrole

Volgens EN 1993-1-1 artikel 6.2.4 en formule (6.9)

A	1,7000e-03	m^2
Nc,Rd	399,50	kN
Eenheidscontrole	0,18	-

Torsiecontrole

Volgens EN 1993-1-1 artikel 6.2.7 en formule (6.23)

Tau,t,Ed	0,9	MPa
Tau,Rd	135,7	MPa
Eenheidscontrole	0,01	-

Opmerking: De eenheidscontrole voor torsie is lager dan de grenswaarde van 0,05. Hierdoor wordt torsie beschouwd als niet-significant en wordt deze genegeerd in de gecombineerde controles.

Afschuivingscontrole voor Vy

Volgens EN 1993-1-1 artikel 6.2.6 en formule (6.17)

Eta	1,20	
Av	9,9000e-04	m^2
Vpl,y,Rd	134,32	kN
Eenheidscontrole	0,00	-

Afschuivingscontrole voor Vz

Volgens EN 1993-1-1 artikel 6.2.6 en formule (6.17)

Eta	1,20	
Av	8,5400e-04	m^2
Vpl,z,Rd	115,87	kN
Eenheidscontrole	0,00	-

Controle buigend moment voor My

Volgens EN 1993-1-1 artikel 6.2.5 en formule (6.12),(6.13)

Wpl,y	7,2600e-05	m^3
Mpl,y,Rd	17,06	kNm
Eenheidscontrole	0,02	-

Controle buigend moment voor Mz

Volgens EN 1993-1-1 artikel 6.2.5 en formule (6.12),(6.13)

Wpl,z	2,1200e-05	m^3
Mpl,z,Rd	4,98	kNm
Eenheidscontrole	0,00	-

Controle gecombineerde buiging, axiale kracht en afschuifkracht

Volgens EN 1993-1-1 artikel 6.2.1 en formule (6.2)

Npl,Rd	399,50	kN
Mpl,y,Rd	17,06	kNm
Mpl,z,Rd	4,98	kNm

Eenheidscontrole (6.2) = 0,18 + 0,02 + 0,00 = 0,20 -

Opmerking: Er is geen specifieke interactieformule volgens EN 1993-1-1 artikel 6.2.9.1 van toepassing.
Daarom wordt de plastisch lineaire som volgens EN 1993-1-1 artikel 6.2.1(7) getoetst.
Opmerking: Aangezien de afschuifkrachten minder dan de helft van de plastische afschuifweerstanden bedragen, wordt het effect ervan op de momentweerstanden genegeerd.

De staaf voldoet aan de doorsnedecontrole.

...::STABILITEITSCONTROLE::...

Classificatie voor staafknikontwerp

Beslissende positie voor stabiliteitsclassificatie: 0,000 m

Classificatie van interne drukonderdelen

Volgens EN 1993-1-1 tabel 5.2 blad 1

Maximale breedte/dikte-verhouding	12,00
Grenswaarde klasse 1	33,00
Grenswaarde klasse 2	38,00
Grenswaarde klasse 3	44,59

=> Interne drukonderdelen klasse 1

Classificatie van uitkragende flenzen

Volgens EN 1993-1-1 tabel 5.2 blad 2

Maximale breedte/dikte-verhouding	4,33
Grenswaarde klasse 1	9,00
Grenswaarde klasse 2	10,00
Grenswaarde klasse 3	13,89

=> Uitkragende flenzen klasse 1
=> Doorsnede geclassificeerd als klasse 1 voor staafknikontwerp

Buigingsknik Controle

Volgens artikel EN 1993-1-1 : 6.3.1.1. en formule (6.46)

Knikparameters	yy	zz	
Zijd. flex. type	geschoord	geschoord	
Systeemlengte L	3.073	1.220	m
lef/lsys k	1.00	0.69	
Kniklengte Lcr	3.068	0.843	m
Kritische Euler belastingen Ncr	801.34	1259.81	kN
Slankheid	66.31	52.88	
Relatieve slankheid Lambda	0.71	0.56	
Limiet slankheid Lambda,0	0.20	0.20	
Knikkromme	c	c	
Imperfectie Alpha	0.49	0.49	
Reductie factor Chi	0.72	0.81	
Knikweerstand Nb,Rd	288.01	322.40	kN

Tabel van waarden		
A	1.7000e-03	m^2
Knikweerstand Nb,Rd	288.01	kN
Eenheidscontrole	0.25	-

Torsieknikcontrole

Volgens artikel EN 1993-1-1 : 6.3.1.1. en formule (6.46)

Tabel van waarden		
Torsieknik lengte	1.220	m
Ncr,T	1349.67	kN

Staalcontrole

Tabel van waarden		
Ncr,TF	624.96	kN
Relatieve slankheid Lambda,T	0.80	
Limiet slankheid Lambda,0	0.20	
Knikkromme	c	
Imperfectie Alpha	0.49	
A	1.7000e-03	m^2
Reductie factor Chi	0.66	
Knikweerstand Nb,Rd	264.65	kN
Eenheidscontrole	0.27	-

Kipcontrole

Volgens artikel EN 1993-1-1 : 6.3.2.1. en formule (6.54)

Kip Parameters		
Methode voor kipcurve	Art. 6.3.2.2.	
Wy	6.0700e-05	m^3
Elastisch critisch moment Mcr	119.48	kNm
Relatieve slankheid Lambda,LT	0.35	
Limiet slankheid Lambda,LT,0	0.40	

Mcr Parameters		
Kiplengte	1.220	m
k	1.00	
kw	1.00	
C1	2.22	
C2	0.06	
C3	1.00	

De slankheid of het buigend moment is van die aard dat een kiptoetsing niet dient uitgevoerd te worden volgens EN 1993-1-1 artikel 6.3.2.2(4)

Controle druk en buiging

Volgens artikel EN 1993-1-1 : 6.3.3. en formule (6.61), (6.62)

Interactie Methode 2

Tabel van waarden		
kyy	0.443	
kyz	0.943	
kzy	0.970	
kzz	0.943	
Delta My	0.00	kNm
Delta Mz	0.00	kNm
A	1.7000e-03	m^2
Wy	6.0700e-05	m^3
Wz	1.1100e-05	m^3
NRk	399.50	kN
My,Rk	14.26	kNm
Mz,Rk	2.61	kNm
My,Ed	-0.36	kNm
Mz,Ed	-0.01	kNm
Interactie Methode 2		
Psi y	-0.071	
Psi z	0.690	
Cmy	0.400	
Cmz	0.876	
CmLT	0.458	

Eenheidscontrole (6.61) = 0.25 + 0.01 + 0.00 = 0.27

Eenheidscontrole (6.62) = 0.27 + 0.02 + 0.00 = 0.30

Plooicontrole

in knikveld 1

Volgens artikel EN 1993-1-5 : 5. & 7.1. en formule (5.10) & (7.1)

Tabel van waarden	
hw/t	14.571

De slankheid van het lijf is van die aard dat de Plooicontrole niet dient uitgevoerd te worden.

De staaf voldoet aan de stabiliteitscontrole.

11.4.3. Vak 9 - onderrand

Lineaire berekening, Extreem : Doorsnede
Selectie : Benoemde selectie - Onderrand: Vak 9
Klasse : All UGT

Staalcontrole							
Staaf	css	BG	mat	dx [m]	Algehele toetsing [-]	Doorsnedetoetsing [-]	Stabiliteittoetsing [-]
S492	CS144 - UNP160	1a/5	S 235	1,720	0,68	0,48	0,68

Lineaire berekening, Extreem : Doorsnede
Selectie : Benoemde selectie - Onderrand: Vak 9

Klasse : All UGT

Staalcontrole

EN 1993-1-1 Norm Controle

Nationale bijlage: Nederlandse NEN-EN NA

Staaf S492	**1,720 m**	**UNP160**	**S 235**	**1a/5**	**0,68 -**

Partiële veiligheidsfactoren	
Gamma M0 voor weerstand van doorsneden	1,00
Gamma M1 voor weerstand tegen instabiliteit	1,00
Gamma M2 voor weerstand van netto-doorsneden	1,25

Materiaal		
Vloeisterkte fy	235,0	MPa
Uiterste sterkte fu	360,0	MPa
Bouwwijze	Gewalst	

...::DOORSNEDE CONTROLE::...

Classificatie voor doorsnede-ontwerp

Volgens EN 1993-1-1 artikel 5.5.2

Classificatie van interne drukonderdelen

Volgens EN 1993-1-1 tabel 5.2 blad 1

Maximale breedte/dikte-verhouding	15,73
Grenswaarde klasse 1	33,00
Grenswaarde klasse 2	38,00
Grenswaarde klasse 3	55,22

=> Interne drukonderdelen klasse 1

Classificatie van uitkragende flenzen

Volgens EN 1993-1-1 tabel 5.2 blad 2

Maximale breedte/dikte-verhouding	4,48
Grenswaarde klasse 1	9,00
Grenswaarde klasse 2	10,00
Grenswaarde klasse 3	13,92

=> Uitkragende flenzen klasse 1

=> Doorsnede geclassificeerd als klasse 1 voor doorsnede-ontwerp

Kritische controle op positie 1.720 m

Interne krachten	Berekende	Eenheid
N,Ed	-172,41	kN
Vy,Ed	0,10	kN
Vz,Ed	-3,09	kN
T,Ed	0,00	kNm
My,Ed	-4,92	kNm
Mz,Ed	0,18	kNm

Drukcontrole

Volgens EN 1993-1-1 artikel 6.2.4 en formule (6.9)

A	2,4000e-03	m^2
Nc,Rd	564,00	kN
Eenheidscontrole	0,31	-

Torsiecontrole

Volgens EN 1993-1-1 artikel 6.2.7 en formule (6.23)

Tau,t,Ed	0,2	MPa
Tau,Rd	135,7	MPa
Eenheidscontrole	0,00	-

Opmerking: De eenheidscontrole voor torsie is lager dan de grenswaarde van 0,05. Hierdoor wordt torsie beschouwd als niet-significant en wordt deze genegeerd in de gecombineerde controles.

Afschuivingscontrole voor Vy

Volgens EN 1993-1-1 artikel 6.2.6 en formule (6.17)

Eta	1,20	
Av	1,3650e-03	m^2
Vpl,y,Rd	185,20	kN
Eenheidscontrole	0,00	-

Afschuivingscontrole voor Vz

Volgens EN 1993-1-1 artikel 6.2.6 en formule (6.17)

Eta	1,20	
Av	1,2240e-03	m^2
Vpl,z,Rd	166,07	kN
Eenheidscontrole	0,02	-

Controle buigend moment voor My

Volgens EN 1993-1-1 artikel 6.2.5 en formule (6.12),(6.13)

Wpl,y	1,3760e-04	m^3

Staalcontrole

Mpl,y,Rd	32,34	kNm
Eenheidscontrole	0,15	-

Controle buigend moment voor Mz
Volgens EN 1993-1-1 artikel 6.2.5 en formule (6.12),(6.13)

Wpl,z	3,5200e-05	m^3
Mpl,z,Rd	8,27	kNm
Eenheidscontrole	0,02	-

Controle gecombineerde buiging, axiale kracht en afschuifkracht
Volgens EN 1993-1-1 artikel 6.2.1 en formule (6.2)

Npl,Rd	564,00	kN
Mpl,y,Rd	32,34	kNm
Mpl,z,Rd	8,27	kNm

Eenheidscontrole (6.2) = 0,31 + 0,15 + 0,02 = 0,48 -

Opmerking: Er is geen specifieke interactieformule volgens EN 1993-1-1 artikel 6.2.9.1 van toepassing.
Daarom wordt de plastisch lineaire som volgens EN 1993-1-1 artikel 6.2.1(7) getoetst.
Opmerking: Aangezien de afschuifkrachten minder dan de helft van de plastische afschuifweerstanden bedragen, wordt het effect ervan op de momentweerstanden genegeerd.
De staaf voldoet aan de doorsnedecontrole.

...::STABILITEITSCONTROLE::...
Classificatie voor staafknikontwerp
Beslissende positie voor stabiliteitsclassificatie: 0,000 m
Classificatie van interne drukonderdelen
Volgens EN 1993-1-1 tabel 5.2 blad 1

Maximale breedte/dikte-verhouding	15,73
Grenswaarde klasse 1	33,00
Grenswaarde klasse 2	38,00
Grenswaarde klasse 3	42,00

=> Interne drukonderdelen klasse 1
Classificatie van uitkragende flenzen
Volgens EN 1993-1-1 tabel 5.2 blad 2

Maximale breedte/dikte-verhouding	4,48
Grenswaarde klasse 1	9,00
Grenswaarde klasse 2	10,00
Grenswaarde klasse 3	14,00

=> Uitkragende flenzen klasse 1
=> Doorsnede geclassificeerd als klasse 1 voor staafknikontwerp

Buigingsknik Controle
Volgens artikel EN 1993-1-1 : 6.3.1.1. en formule (6.46)

Knikparameters	yy	zz	
Zijd. flex. type	geschoord	geschoord	
Systeemlengte L	1.720	1.720	m
lef/lsys k	0.96	0.83	
Kniklengte Lcr	1.650	1.432	m
Kritische Euler belastingen Ncr	7042.50	862.57	kN
Slankheid	26.58	75.94	
Relatieve slankheid Lambda	0.28	0.81	
Limiet slankheid Lambda,0	0.20	0.20	
Knikkromme	c	c	
Imperfectie Alpha	0.49	0.49	
Reductie factor Chi	0.96	0.66	
Knikweerstand Nb,Rd	540.21	370.40	kN

Tabel van waarden		
A	2.4000e-03	m^2
Knikweerstand Nb,Rd	370.40	kN
Eenheidscontrole	0.47	-

Torsieknikcontrole
Volgens artikel EN 1993-1-1 : 6.3.1.1. en formule (6.46)

Tabel van waarden		
Torsieknik lengte	1.720	m
Ncr,T	1486.49	kN
Ncr,TF	1391.77	kN
Relatieve slankheid Lambda,T	0.64	
Limiet slankheid Lambda,0	0.20	
Knikkromme	c	
Imperfectie Alpha	0.49	
A	2.4000e-03	m^2
Reductie factor Chi	0.76	
Knikweerstand Nb,Rd	430.61	kN
Eenheidscontrole	0.40	-

Kipcontrole

Staalcontrole

Volgens artikel EN 1993-1-1 : 6.3.2.1. en formule (6.54)

Kip Parameters		
Methode voor kipcurve	Art. 6.3.2.2.	
Wy	1.1600e-04	m^3
Elastisch critisch moment Mcr	131.03	kNm
Relatieve slankheid Lambda,LT	0.46	
Limiet slankheid Lambda,LT,0	0.40	

Mcr Parameters		
Kiplengte	1.720	m
k	1.00	
kw	1.00	
C1	1.82	
C2	0.01	
C3	1.00	

De slankheid of het buigend moment is van die aard dat een kiptoetsing niet dient uitgevoerd te worden volgens EN 1993-1-1 artikel 6.3.2.2(4)

Controle druk en buiging

Volgens artikel EN 1993-1-1 : 6.3.3. en formule (6.61), (6.62)

Interactie Methode 2

Tabel van waarden		
kyy	0.616	
kyz	1.030	
kzy	0.944	
kzz	1.030	
Delta My	0.00	kNm
Delta Mz	0.00	kNm
A	2.4000e-03	m^2
Wy	1.1600e-04	m^3
Wz	1.8300e-05	m^3
NRk	564.00	kN
My,Rk	27.26	kNm
Mz,Rk	4.30	kNm
My,Ed	-4.92	kNm
Mz,Ed	0.18	kNm
Interactie Methode 2		
Psi y	0.000	
Psi z	0.000	
Cmy	0.584	
Cmz	0.840	
CmLT	0.584	

Eenheidscontrole (6.61) = 0.32 + 0.11 + 0.04 = 0.47

Eenheidscontrole (6.62) = 0.47 + 0.17 + 0.04 = 0.68

Plooicontrole

in knikveld 1

Volgens artikel EN 1993-1-5 : 5. & 7.1. en formule (5.10) & (7.1)

Tabel van waarden	
hw/t	18.533

De slankheid van het lijf is van die aard dat de Plooicontrole niet dient uitgevoerd te worden.

De staaf voldoet aan de stabiliteitscontrole.

11.4.4. Vak 12 - onderrand

Lineaire berekening, Extreem : Doorsnede
Selectie : Benoemde selectie - Onderrand: Vak 12
Klasse : All UGT

Staalcontrole

Staaf	css	BG	mat	dx [m]	Algehele toetsing [-]	Doorsnedetoetsing [-]	Stabiliteittoetsing [-]
S631	CS101 - UNP120	3-p/9	S 235	2,498	0,64	0,41	0,64

Lineaire berekening, Extreem : Doorsnede
Selectie : Benoemde selectie - Onderrand: Vak 12
Klasse : All UGT

Staalcontrole

EN 1993-1-1 Norm Controle

Nationale bijlage: Nederlandse NEN-EN NA

Staaf S631	**4,465 m**	**UNP120**	**S 235**	**3-p/9**	**0,64 -**

Partiële veiligheidsfactoren	
Gamma M0 voor weerstand van doorsneden	1,00
Gamma M1 voor weerstand tegen instabiliteit	1,00
Gamma M2 voor weerstand van netto-doorsneden	1,25

Staalcontrole

Materiaal		
Vloeisterkte fy	235,0	MPa
Uiterste sterkte fu	360,0	MPa
Bouwwijze	Gewalst	

...::DOORSNEDE CONTROLE::...

Classificatie voor doorsnede-ontwerp
Volgens EN 1993-1-1 artikel 5.5.2
Classificatie van uitkragende flenzen
Volgens EN 1993-1-1 tabel 5.2 blad 2

Maximale breedte/dikte-verhouding	4,33
Grenswaarde klasse 1	224,09
Grenswaarde klasse 2	248,99
Grenswaarde klasse 3	29,24

=> Doorsnede geclassificeerd als klasse 1 voor doorsnede-ontwerp

Kritische controle op positie 2.498 m

Interne krachten	Berekende	Eenheid
N,Ed	-33,56	kN
Vy,Ed	-5,36	kN
Vz,Ed	-0,11	kN
T,Ed	0,00	kNm
My,Ed	0,33	kNm
Mz,Ed	1,51	kNm

Drukcontrole
Volgens EN 1993-1-1 artikel 6.2.4 en formule (6.9)

A	1,7000e-03	m^2
Nc,Rd	399,50	kN
Eenheidscontrole	0,08	-

Torsiecontrole
Volgens EN 1993-1-1 artikel 6.2.7 en formule (6.23)

Tau,t,Ed	0,3	MPa
Tau,Rd	135,7	MPa
Eenheidscontrole	0,00	-

Opmerking: De eenheidscontrole voor torsie is lager dan de grenswaarde van 0,05. Hierdoor wordt torsie beschouwd als niet-significant en wordt deze genegeerd in de gecombineerde controles.

Afschuivingscontrole voor Vy
Volgens EN 1993-1-1 artikel 6.2.6 en formule (6.17)

Eta	1,20	
Av	9,9000e-04	m^2
Vpl,y,Rd	134,32	kN
Eenheidscontrole	0,04	-

Afschuivingscontrole voor Vz
Volgens EN 1993-1-1 artikel 6.2.6 en formule (6.17)

Eta	1,20	
Av	8,5400e-04	m^2
Vpl,z,Rd	115,87	kN
Eenheidscontrole	0,00	-

Controle buigend moment voor My
Volgens EN 1993-1-1 artikel 6.2.5 en formule (6.12),(6.13)

Wpl,y	7,2600e-05	m^3
Mpl,y,Rd	17,06	kNm
Eenheidscontrole	0,02	-

Controle buigend moment voor Mz
Volgens EN 1993-1-1 artikel 6.2.5 en formule (6.12),(6.13)

Wpl,z	2,1200e-05	m^3
Mpl,z,Rd	4,98	kNm
Eenheidscontrole	0,30	-

Controle gecombineerde buiging, axiale kracht en afschuifkracht
Volgens EN 1993-1-1 artikel 6.2.1 en formule (6.2)

Npl,Rd	399,50	kN
Mpl,y,Rd	17,06	kNm
Mpl,z,Rd	4,98	kNm

Eenheidscontrole (6.2) = 0,08 + 0,02 + 0,30 = 0,41 -

Opmerking: Er is geen specifieke interactieformule volgens EN 1993-1-1 artikel 6.2.9.1 van toepassing.
Daarom wordt de plastisch lineaire som volgens EN 1993-1-1 artikel 6.2.1(7) getoetst.
Opmerking: Aangezien de afschuifkrachten minder dan de helft van de plastische afschuifweerstanden bedragen, wordt het effect ervan op de momentweerstanden genegeerd.

Staalcontrole

De staaf voldoet aan de doorsnedecontrole.

...::STABILITEITSCONTROLE::...

Classificatie voor staafknikontwerp

Beslissende positie voor stabiliteitsclassificatie: 2,145 m

Classificatie van interne drukonderdelen

Volgens EN 1993-1-1 tabel 5.2 blad 1

Maximale breedte/dikte-verhouding	12,00
Grenswaarde klasse 1	33,00
Grenswaarde klasse 2	38,00
Grenswaarde klasse 3	45,55

=> Interne drukonderdelen klasse 1

Classificatie van uitkragende flenzen

Volgens EN 1993-1-1 tabel 5.2 blad 2

Maximale breedte/dikte-verhouding	4,33
Grenswaarde klasse 1	26,62
Grenswaarde klasse 2	29,58
Grenswaarde klasse 3	19,14

=> Uitkragende flenzen klasse 1

=> Doorsnede geclassificeerd als klasse 1 voor staafknikontwerp

Buigingsknik Controle

Volgens artikel EN 1993-1-1 : 6.3.1.1. en formule (6.46)

Knikparameters	yy	zz	
Zijd. flex. type	geschoord	geschoord	
Systeemlengte L	1.967	0.710	m
lef/lsys k	0.98	0.85	
Kniklengte Lcr	1.922	0.602	m
Kritische Euler belastingen Ncr	2042.28	2467.42	kN
Slankheid	41.54	37.79	
Relatieve slankheid Lambda	0.44	0.40	
Limiet slankheid Lambda,0	0.20	0.20	

De slankheid of de normaalkracht is van die aard dat een Buigingsknikcontrole niet dient uitgevoerd te worden volgens EN 1993-1-1 artikel 6.3.1.2(4)

Torsieknikcontrole

Volgens artikel EN 1993-1-1 : 6.3.1.1. en formule (6.46)

Tabel van waarden		
Torsieknik lengte	0.710	m
Ncr,T	2147.57	kN
Ncr,TF	1331.44	kN
Relatieve slankheid Lambda,T	0.55	
Limiet slankheid Lambda,0	0.20	

De slankheid of de normaalkracht is van die aard dat Torsie (-Buig) Knik effecten mogen verwaarloosd worden volgens EN 1993-1-1 artikel 6.3.1.2(4)

Kipcontrole

Volgens artikel EN 1993-1-1 : 6.3.2.1. en formule (6.54)

Kip Parameters		
Methode voor kipcurve	Art. 6.3.2.2.	
Wy	6.0700e-05	m^3
Elastisch critisch moment Mcr	142.14	kNm
Relatieve slankheid Lambda,LT	0.32	
Limiet slankheid Lambda,LT,0	0.40	

Mcr Parameters		
Kiplengte	0.710	m
k	1.00	
kw	1.00	
C1	1.22	
C2	0.02	
C3	1.00	

De slankheid of het buigend moment is van die aard dat een kiptoetsing niet dient uitgevoerd te worden volgens EN 1993-1-1 artikel 6.3.2.2(4)

Controle druk en buiging

Volgens artikel EN 1993-1-1 : 6.3.3. en formule (6.61), (6.62)

Interactie Methode 2

Tabel van waarden		
kyy	0.409	
kyz	0.887	
kzy	0.997	
kzz	0.887	
Delta My	0.00	kNm
Delta Mz	0.00	kNm
A	1.7000e-03	m^2
Wy	6.0700e-05	m^3
Wz	1.1100e-05	m^3
NRk	399.50	kN
My,Rk	14.26	kNm
Mz,Rk	2.61	kNm
My,Ed	-0.60	kNm

Staalcontrole

Tabel van waarden		
Mz,Ed	1.52	kNm
Interactie Methode 2		
Psi y	-0.550	
Psi z	0.865	
Cmy	0.400	
Cmz	0.869	
CmLT	0.843	

Eenheidscontrole (6.61) = 0.08 + 0.02 + 0.52 = 0.62
Eenheidscontrole (6.62) = 0.08 + 0.04 + 0.52 = 0.64

Plooicontrole
in knikveld 1
Volgens artikel EN 1993-1-5 : 5. & 7.1. en formule (5.10) & (7.1)

Tabel van waarden	
hw/t	14.571

De slankheid van het lijf is van die aard dat de Plooicontrole niet dient uitgevoerd te worden.
De staaf voldoet aan de stabiliteitscontrole.

11.5. Controle verzwaarde randstaaf van Vak 2

11.5.1. Randen : Vak 2

Lineaire berekening, Extreem : Doorsnede
Selectie : Benoemde selectie - Randstaven: Vak 2
Klasse : All UGT

Staalcontrole							
Staaf	css	BG	mat	dx [m]	Algehele toetsing [-]	Doorsnedetoetsing [-]	Stabiliteittoetsing [-]
C6	CS167 - 2LX	1a/32	S 235	0,000	0,57	0,53	0,57

11.5.2. Randen : Vak 2

Lineaire berekening, Extreem : Doorsnede
Selectie : Benoemde selectie - Randstaven: Vak 2
Klasse : All UGT

EN 1993-1-1 Norm Controle
Nationale bijlage: Nederlandse NEN-EN NA

Staaf C6	**3,374 m**	**2LX (L140X13; 15)**	**S 235**	**1a/32**	**0,57 -**

Partiële veiligheidsfactoren	
Gamma M0 voor weerstand van doorsneden	1,00
Gamma M1 voor weerstand tegen instabiliteit	1,00
Gamma M2 voor weerstand van netto-doorsneden	1,25

Materiaal		
Vloeisterkte fy	235,0	MPa
Uiterste sterkte fu	360,0	MPa
Bouwwijze	Gewalst	

Waarschuwing: Sterktereductie gerelateerd aan de dikte wordt niet ondersteund voor dit type doorsnede.
...::DOORSNEDE CONTROLE::...
Classificatie voor doorsnede-ontwerp
Volgens EN 1993-1-1 artikel 5.5.2
Waarschuwing: Classificatie wordt niet ondersteund voor dit type doorsnede.
De doorsnede wordt gecontroleerd als elastisch, klasse 3.
Kritische controle op positie 0.000 m
As definitie :
- hoofd y- as in deze normcontrole verwijst naar de hoofd z as in Scia Engineer
- hoofd z- as in deze normcontrole verwijst naar de hoofd y as in Scia Engineer

Interne krachten	Berekende	Eenheid
N,Ed	-865,74	kN
Vy,Ed	0,00	kN
Vz,Ed	-0,12	kN
T,Ed	0,00	kNm
My,Ed	0,00	kNm
Mz,Ed	0,00	kNm

Drukcontrole
Volgens EN 1993-1-1 artikel 6.2.4 en formule (6.9)

A	6,9912e-03	m^2
Nc,Rd	1642,93	kN
Eenheidscontrole	0,53	-

Afschuivingscontrole voor Vz
Volgens EN 1993-1-1 artikel 6.2.6 en formule (6.19)

Tau,Vz,Ed	8,2	MPa
Tau,Rd	135,7	MPa
Eenheidscontrole	0,06	-

Opmerking: Er is geen afschuifoppervlak opgegeven voor deze doorsnede/bouwwijze, waardoor de plastische afschuifweerstand niet kan worden bepaald. Het gevolg is dat de elastische afschuifweerstand volgens EN 1993-1-1 artikel 6.2.6(4) wordt getoetst.

Controle gecombineerde buiging, axiale kracht en afschuifkracht
Volgens EN 1993-1-1 artikel 6.2.1(5) en formule (6.1)

Elastische toetsing		
Vezel	1	
Sigma,N,Ed	123,8	MPa
Sigma,My,Ed	0,0	MPa
Sigma,Mz,Ed	0,0	MPa
Sigma,tot,Ed	123,8	MPa
Tau,Vy,Ed	0,0	MPa
Tau,Vz,Ed	8,2	MPa
Tau,t,Ed	0,0	MPa
Tau,tot,Ed	8,2	MPa
Sigma,von Mises,Ed	124,7	MPa
Eenheidscontrole	0,53	-

De staaf voldoet aan de doorsnedecontrole.

...::STABILITEITSCONTROLE::...

Buigingsknik Controle
Volgens artikel EN 1993-1-1 : 6.3.1.1. en formule (6.46)

Slankheidsgegevens (EN 50341-1) voor : Staaf met symmetrische schoren		
L	1.687	m
ivv	53.85	mm
Knikkromme	c	
Kritische slankheid	31.33	
Effectieve slankheid	0.33	
Knikfactor (omega_buc)	0.93	
UC slankheid	0.26	
Limiet slankheid	120.00	

Tabel van waarden		
A	6.9912e-03	m^2
Knikweerstand Nb,Rd	1531.10	kN
Eenheidscontrole	0.57	-

Torsieknikcontrole
Volgens artikel EN 1993-1-1 : 6.3.1.1. en formule (6.46)

Tabel van waarden		
Torsieknik lengte	1.687	m
Ncr,T	14629.28	kN
Ncr,TF	16249.59	kN
Relatieve slankheid Lambda,T	0.34	
Limiet slankheid Lambda,0	0.20	
Knikkromme	c	
Imperfectie Alpha	0.49	
A	6.9912e-03	m^2
Reductie factor Chi	0.93	
Knikweerstand Nb,Rd	1529.81	kN
Eenheidscontrole	0.57	-

Controle druk en buiging
Volgens artikel EN 1993-1-1 : 6.3.3. en formule (6.61), (6.62)
Interactie Methode 2

Tabel van waarden		
kyy	0.779	
kyz	0.779	
kzy	0.979	
kzz	0.779	
Delta My	0.00	kNm
Delta Mz	0.00	kNm
A	6.9912e-03	m^2
Wy	3.0936e-04	m^3
Wz	2.0480e-04	m^3
NRk	1642.93	kN
My,Rk	72.70	kNm
Mz,Rk	48.13	kNm
My,Ed	-0.11	kNm
Mz,Ed	0.00	kNm

Tabel van waarden		
Interactie Methode 2		
Psi y	0.000	
Psi z	0.000	
Cmy	0.700	
Cmz	0.700	
CmLT	0.700	

Eenheidscontrole (6.61) = 0.57 + 0.00 + 0.00 = 0.57
Eenheidscontrole (6.62) = 0.57 + 0.00 + 0.00 = 0.57

De staaf voldoet aan de stabiliteitscontrole.

Bijlage C Controle staven mastlichaam

Referentienr :	13039140509	**Berekening :**	B.14008
Project	: 150 kV lijn Leiden - Zoetermeer		
Part	: mast 52		

D&C ENGINEERING

Check equal leg angle-members according to Eurocode 3, prEN 1993-1-1 : 2003

File prEN 1993-1-1.revB.xls d.d. 2-32012, JG

Check section: *Vak 1 - randen*

Memberforces : **(Attention! pressure = "-" and tension ="+")**

Compression:	N_{Sd}	=	*-900,0*	kN	***Combined forces diagonal:***			
Tension:	N_{Sd}	=	*696,7*	kN	$N_{comb1;c;s;d}$ (min. Compr. or tension)	=	*0*	kN
	$F_{perpend.;s;d}$	=	*0*	kN	$N_{comb2;c;s;d}$ (max. compression)	=	*0*	kN

Angle profile : *H150/150/14* (*1)

h	=	*150*	mm	I_y	=	*8453963*	mm^4
b	=	*150*	mm	$W_{y;el;eff.1}$	=	*78326*	mm^3
t_f	=	*14*	mm	$W_{y;el;eff.2}$	=	*200966*	mm^3
y_s	=	*42,1*	mm	i_y	=	*45,8*	mm
A_{bruto}	=	*4031*	mm^2	i_v	=	*29,1*	mm

Material :

Mat. qual. Fe360 / Fe510	=	*Fe360*		Permissible stress $f_{y;d}$	=	*235,0*	N/mm^2

Geometry section and bolts:

$L_{y;cr}$	=	*2190*	mm	No. bolts / end / flange	=	*5*	**(Per flange !)**
$L_{v;cr}$	=	*2190*	mm	Type of bolts M / "	=	*24*	
$L_{tot\ (with\ comb.\ buckling)}$	=	*0*	mm	End distance bolt e1	=	*40*	mm
$a*L_{tot\ (with\ comb.\ buckling)}$	=	*0*	mm	Centre-centre spacing bolt s1	=	*75*	mm
$L_{perpendicular\ force}$	=	*0*	mm	Edge distance bolt e2	=	*40*	mm
Position perpendicular force	=	*1*	(⌉=1, ⌋=2)	Boltquality 4.6/5.6/8.8/10.9	=	*4,6*	
Column profile?	=	*2*	no=1, yes=2	Rolled screw threads	=	*1*	
Thickness tie plate	=	*14*	mm	Dubble strap joint no=1, yes=2	=	*1*	

Summary checks :

1 - Check tension on member :

$UC_1 = N_{Ed} / N_{t.Rd}$ = **0,81** **< 1**

2 - Check perpendicular force on member :

$UC_2 = M_{Ed} / M_{c.Rd}$ = **n.v.t.** **< 1**

3 - Check of the member slenderness :

$UC_3 = C_{max;buc} / C_{perm}$ = **75** **< 120**

4 - Check stress in member due to compression without excentricity:

$UC_4 = N_{E;d} / (C_{max;buc} \times N_{b;Rd})$ = **1,31** **> 1 !!**

5 - Check stress in member due to compression with excentricity:

$UC_{5-1} = N_{E;d} / (C_{max;buc} \times N_{b;Rd})$ = **n.v.t.** **< 1**

$UC_{5-2} = N_{E;d} / N_{b;Rd} + k_{yy} \times (M_{y;Ed} + DM_{y;Ed}) / (C_{LT} \times M_{y;Rk})$ = **n.v.t.** **< 1**

6 - Check stress with combined buckling of two sections:

$UC_{5-1} = N_{E;d} / (C_{max;buc} \times N_{b;Rd})$ = **n.v.t.** **< 1**

$UC_{5-2} = N_{E;d} / N_{b;Rd} + k_{yy} \times (M_{y;Ed} + DM_{y;Ed}) / (C_{LT} \times M_{y;Rk})$ = **n.v.t.** **< 1**

7 - Check shear stress boltconnection:

$UC_7 = F_{v;Ed} / F_{v;Rd}$ = **1,33** **> 1 !!**

8 - Check bearing stress boltconnection:

$UC_8 = F_{b;Ed} / F_{b;Rd}$ = **0,60** **< 1**

Remarks:

The maximum increase of stress or totalstress is(*2) : **$U.C_{max}$ = 1,33 = 133%**

(*1) Eventually, with the checks of the stresses, the cross-section reduction method is used according to prEN 1993-1-5.

(*2) The total stress or increase of stress has been related to the permissible stress.

Revision :	0	A	B	C	D	E	F
Date :	5-feb-2014						
Name :	M. Glegola						
Checked :	J. Hollaar						

Referentienr :	13039140509	**Berekening :**	B.14008
Project	: 150 kV lijn Leiden - Zoetermeer		
Part	: mast 52		

D&C ENGINEERING

Check equal leg angle-members according to Eurocode 3, prEN 1993-1-1 : 2003

File prEN 1993-1-1.revB.xls d.d. 2-32012, JG

Check section: *Vak 1 - randen* verzwaard

Memberforces : **(Attention! pressure = "-" and tension ="+")**

Compression:	N_{Sd}	=	*-900,0*	kN	***Combined forces diagonal:***			
Tension:	N_{Sd}	=	*696,7*	kN	$N_{comb1;c;s;d}$ (min. Compr. or tension)	=	*0*	kN
	$F_{perpend.;s;d}$	=	*0*	kN	$N_{comb2;c;s;d}$ (max. compression)	=	*0*	kN

Angle profile : *H150/150/14* (*1)

h	=	*150*	mm	I_y	=	*8453963*	mm^4
b	=	*150*	mm	$W_{y;el;eff.1}$	=	*78326*	mm^3
t_f	=	*14*	mm	$W_{y;el;eff.2}$	=	*200966*	mm^3
y_s	=	*42,1*	mm	i_y	=	*45,8*	mm
A_{bruto}	=	*4031*	mm^2	i_v	=	*29,1*	mm

Material :

Mat. qual. Fe360 / Fe510	=	*Fe360*		Permissible stress $f_{y;d}$	=	*235,0*	N/mm^2

Geometry section and bolts:

$L_{y;cr}$	=	*730*	mm	No. bolts / end / flange	=	*5*	**(Per flange !)**
$L_{v;cr}$	=	*730*	mm	Type of bolts M / "	=	*24*	
$L_{tot\ (with\ comb.\ buckling)}$	=	*0*	mm	End distance bolt e1	=	*40*	mm
$a^*L_{tot\ (with\ comb.\ buckling)}$	=	*0*	mm	Centre-centre spacing bolt s1	=	*75*	mm
$L_{perpendicular\ force}$	=	*0*	mm	Edge distance bolt e2	=	*40*	mm
Position perpendicular force	=	*1*	(⌉=1, ⌋=2)	Boltquality 4.6/5.6/8.8/10.9	=	*8,8*	
Column profile?	=	*2*	no=1, yes=2	Rolled screw threads	=	*1*	
Thickness tie plate	=	*14*	mm	Dubble strap joint no=1, yes=2	=	*1*	

Summary checks :

1 - Check tension on member :

$UC_1 = N_{Ed} / N_{t.Rd}$ = **0,81** **< 1**

2 - Check perpendicular force on member :

$UC_2 = M_{Ed} / M_{c.Rd}$ = **n.v.t.** **< 1**

3 - Check of the member slenderness :

$UC_3 = C_{max;buc} / C_{perm}$ = **25** **< 120**

4 - Check stress in member due to compression without excentricity:

$UC_4 = N_{E;d} / (C_{max;buc} \times N_{b;Rd})$ = **0,97** **< 1**

5 - Check stress in member due to compression with excentricity:

$UC_{5-1} = N_{E;d} / (C_{max;buc} \times N_{b;Rd})$ = **n.v.t.** **< 1**

$UC_{5-2} = N_{E;d} / N_{b;Rd} + k_{yy} \times (M_{y;Ed} + DM_{y;Ed}) / (C_{LT} \times M_{y;Rk})$ = **n.v.t.** **< 1**

6 - Check stress with combined buckling of two sections:

$UC_{5-1} = N_{E;d} / (C_{max;buc} \times N_{b;Rd})$ = **n.v.t.** **< 1**

$UC_{5-2} = N_{E;d} / N_{b;Rd} + k_{yy} \times (M_{y;Ed} + DM_{y;Ed}) / (C_{LT} \times M_{y;Rk})$ = **n.v.t.** **< 1**

7 - Check shear stress boltconnection:

$UC_7 = F_{v;Ed} / F_{v;Rd}$ = **0,66** **< 1**

8 - Check bearing stress boltconnection:

$UC_8 = F_{b;Ed} / F_{b;Rd}$ = **0,60** **< 1**

Remarks:

The maximum increase of stress or totalstress is(*2) : **$U.C_{max}$ = 0,97 = 97%**

(*1) Eventually, with the checks of the stresses, the cross-section reduction method is used according to prEN 1993-1-5.

(*2) The total stress or increase of stress has been related to the permissible stress.

Revision :	0	A	B	C	D	E	F
Date :	5-feb-2014						
Name :	M. Glegola						
Checked :	J. Hollaar						

Referentienr :	13039140509	**Berekening :**	B.14008
Project	: 150 kV lijn Leiden - Zoetermeer		
Part	: mast 52		

D&C ENGINEERING

Check equal leg angle-members according to Eurocode 3, prEN 1993-1-1 : 2003

File prEN 1993-1-1.revB.xls d.d. 2-32012, JG

Check section: *Vak 1 - diagonalen*

Memberforces : **(Attention! pressure = "-" and tension ="+")**

Compression:	N_{Sd}	=	*-65,7*	kN	***Combined forces diagonal:***			
Tension:	N_{Sd}	=	*63,4*	kN	$N_{comb1;c;s;d}$ (min. Compr. or tension)	=	*0*	kN
	$F_{perpend.;s;d}$	=	*0*	kN	$N_{comb2;c;s;d}$ (max. compression)	=	*0*	kN

Angle profile : *H180/90/10* (*1)

h	=	*180*	mm	I_y	=	*8803399*	mm^4
b	=	*90*	mm	$W_{y;el;eff.1}$	=	*54516*	mm^3
t_f	=	*10*	mm	$W_{y;el;eff.2}$	=	*475424*	mm^3
y_s	=	*18,5*	mm	i_y	=	*58,0*	mm
A_{bruto}	=	*2621*	mm^2	i_v	=	*19,2*	mm

Material :

Mat. qual. Fe360 / Fe510	=	*Fe360*		Permissible stress $f_{y;d}$	=	*235,0*	N/mm^2

Geometry section and bolts:

$L_{y;cr}$	=	*12292*	mm	No. bolts / end / flange	=	*2*	
$L_{v;cr}$	=	*2458*	mm	Type of bolts M / "	=	*24*	
L_{tot} (with comb. buckling)	=	*0*	mm	End distance bolt e1	=	*35*	mm
$a*L_{tot}$ (with comb. buckling)	=	*0*	mm	Centre-centre spacing bolt s1	=	*70*	mm
$L_{perpendicular\ force}$	=	*0*	mm	Edge distance bolt e2	=	*40*	mm
Position perpendicular force	=	*1*	(⌉=1, ⌋=2)	Boltquality 4.6/5.6/8.8/10.9	=	*4,6*	
Column profile?	=	*1*	no=1, yes=2	Rolled screw threads	=	*1*	
Thickness tie plate	=	*10*	mm	Dubble strap joint no=1, yes=2	=	*1*	

Summary checks :

1 - Check tension on member :

$UC_1 = N_{Ed} / N_{t.Rd}$ = **0,22** **< 1**

2 - Check perpendicular force on member :

$UC_2 = M_{Ed} / M_{c.Rd}$ = **n.v.t.** **< 1**

3 - Check of the member slenderness :

$UC_3 = C_{max;buc} / C_{perm}$ = **212** **< 200 or 240**

4 - Check stress in member due to compression without excentricity:

$UC_4 = N_{E;d} / (C_{max;buc} \times N_{b;Rd})$ = **0,55** **< 1**

5 - Check stress in member due to compression with excentricity:

$UC_{5-1} = N_{E;d} / (C_{max;buc} \times N_{b;Rd})$ = **n.v.t.** **< 1**

$UC_{5-2} = N_{E;d} / N_{b;Rd} + k_{yy} \times (M_{y;Ed} + DM_{y;Ed}) / (C_{LT} \times M_{y;Rk})$ = **n.v.t.** **< 1**

6 - Check stress with combined buckling of two sections:

$UC_{5-1} = N_{E;d} / (C_{max;buc} \times N_{b;Rd})$ = **n.v.t.** **< 1**

$UC_{5-2} = N_{E;d} / N_{b;Rd} + k_{yy} \times (M_{y;Ed} + DM_{y;Ed}) / (C_{LT} \times M_{y;Rk})$ = **n.v.t.** **< 1**

7 - Check shear stress boltconnection:

$UC_7 = F_{v;Ed} / F_{v;Rd}$ = **0,48** **< 1**

8 - Check bearing stress boltconnection:

$UC_8 = F_{b;Ed} / F_{b;Rd}$ = **0,49** **< 1**

Remarks:

The maximum increase of stress or totalstress is(*2) : **$U.C_{max}$ = 0,55 = 55%**

(*1) Eventually, with the checks of the stresses, the cross-section reduction method is used according to prEN 1993-1-5.

(*2) The total stress or increase of stress has been related to the permissible stress.

Revision :	0	A	B	C	D	E	F
Date :	5-feb-2014						
Name :	M. Glegola						
Checked :	J. Hollaar						

Referentienr :	13039140509	**Berekening :**	B.14008
Project	: 150 kV lijn Leiden - Zoetermeer		
Part	: mast 52		

D&C ENGINEERING

Check equal leg angle-members according to Eurocode 3, prEN 1993-1-1 : 2003

File prEN 1993-1-1.revB.xls d.d. 2-32012, JG

Check section: *Vak 1 - 1e en 2e hor knikverkorters*

Memberforces : **(Attention! pressure = "-" and tension ="+")**

Compression:	N_{Sd}	=	-8,8	kN	***Combined forces diagonal:***			
Tension:	N_{Sd}	=	8,8	kN	$N_{comb1;c;s;d}$ (min. Compr. or tension)	=	0	kN
	$F_{perpend.;s;d}$	=	1,5	kN	$N_{comb2;c;s;d}$ (max. compression)	=	0	kN

Angle profile : *H50/40/5* (*1)

h	=	50	mm	I_y	=	103800	mm^4
b	=	40	mm	$W_{y;el;eff.1}$	=	2638	mm^3
t_f	=	5	mm	$W_{y;el;eff.2}$	=	9746	mm^3
y_s	=	10,7	mm	i_y	=	15,6	mm
A_{bruto}	=	427	mm^2	i_v	=	8,4	mm

Material :

Mat. qual. Fe360 / Fe510	=	Fe360		Permissible stress $f_{y;d}$	=	235,0	N/mm^2

Geometry section and bolts:

$L_{y;cr}$	=	1520	mm	No. bolts / end / flange	=	1	
$L_{v;cr}$	=	1520	mm	Type of bolts M / "	=	16	
$L_{tot\ (with\ comb.\ buckling)}$	=	0	mm	End distance bolt e1	=	25	mm
$a^*L_{tot\ (with\ comb.\ buckling)}$	=	0	mm	Centre-centre spacing bolt s1	=	70	mm
$L_{perpendicular\ force}$	=	1520	mm	Edge distance bolt e2	=	22	mm
Position perpendicular force	=	1	(⌉=1, ⌋=2)	Boltquality 4.6/5.6/8.8/10.9	=	4,6	
Column profile?	=	1	no=1, yes=2	Rolled screw threads	=	1	
Thickness tie plate	=	5	mm	Dubble strap joint no=1, yes=2	=	1	

Summary checks :

1 - Check tension on member :

$UC_1 = N_{Ed} / N_{t.Rd}$ = **0,23** **< 1**

2 - Check perpendicular force on member :

$UC_2 = M_{Ed} / M_{c.Rd}$ = **0,92** **< 1**

3 - Check of the member slenderness :

$UC_3 = C_{max;buc} / C_{perm}$ = **181** **< 200 or 240**

4 - Check stress in member due to compression without excentricity:

$UC_4 = N_{E;d} / (C_{max;buc} \times N_{b;Rd})$ = **n.v.t.** **< 1**

5 - Check stress in member due to compression with excentricity:

$UC_{5-1} = N_{E;d} / (C_{max;buc} \times N_{b;Rd})$ = **0,39** **< 1**

$UC_{5-2} = N_{E;d} / N_{b;Rd} + k_{yy} \times (M_{y;Ed} + DM_{y;Ed}) / (C_{LT} \times M_{y;Rk})$ = **0,49** **< 1**

6 - Check stress with combined buckling of two sections:

$UC_{5-1} = N_{E;d} / (C_{max;buc} \times N_{b;Rd})$ = **n.v.t.** **< 1**

$UC_{5-2} = N_{E;d} / N_{b;Rd} + k_{yy} \times (M_{y;Ed} + DM_{y;Ed}) / (C_{LT} \times M_{y;Rk})$ = **n.v.t.** **< 1**

7 - Check shear stress boltconnection:

$UC_7 = F_{v;Ed} / F_{v;Rd}$ = **0,29** **< 1**

8 - Check bearing stress boltconnection:

$UC_8 = F_{b;Ed} / F_{b;Rd}$ = **0,48** **< 1**

Remarks:

The maximum increase of stress or totalstress is(*2) : **$U.C_{max}$ = 0,92 = 92%**

(*1) Eventually, with the checks of the stresses, the cross-section reduction method is used according to prEN 1993-1-5.

(*2) The total stress or increase of stress has been related to the permissible stress.

Revision :	0	A	B	C	D	E	F
Date :	5-feb-2014						
Name :	M. Glegola						
Checked :	J. Hollaar						

Referentienr :	13039140509	**Berekening :**	B.14008
Project	: 150 kV lijn Leiden - Zoetermeer		
Part	: mast 52		

D&C ENGINEERING

Check equal leg angle-members according to Eurocode 3, prEN 1993-1-1 : 2003

File prEN 1993-1-1.revB.xls d.d. 2-32012, JG

Check section: *Vak 1 - 3e hor. knikverkorters*

Memberforces : **(Attention! pressure = "-" and tension ="+")**

Compression:	N_{Sd}	=	*-8,8*	kN	***Combined forces diagonal:***			
Tension:	N_{Sd}	=	*8,8*	kN	$N_{comb1;c;s;d}$ (min. Compr. or tension)	=	*0*	kN
	$F_{perpend.;s;d}$	=	*1,5*	kN	$N_{comb2;c;s;d}$ (max. compression)	=	*0*	kN

Angle profile : *H50/50/5* (*1)

h	=	*50*	mm	I_y	=	*109643*	mm^4
b	=	*50*	mm	$W_{y;el;eff.1}$	=	*3049*	mm^3
t_f	=	*5*	mm	$W_{y;el;eff.2}$	=	*7811*	mm^3
y_s	=	*14,0*	mm	i_y	=	*15,1*	mm
A_{bruto}	=	*480*	mm^2	i_v	=	*9,6*	mm

Material :

Mat. qual. Fe360 / Fe510	=	*Fe360*		Permissible stress $f_{y;d}$	=	*235,0*	N/mm^2

Geometry section and bolts:

$L_{y;cr}$	=	*2280*	mm	No. bolts / end / flange	=	*1*	
$L_{v;cr}$	=	*2280*	mm	Type of bolts M / "	=	*16*	
$L_{tot\ (with\ comb.\ buckling)}$	=	*0*	mm	End distance bolt e1	=	*25*	mm
$a*L_{tot\ (with\ comb.\ buckling)}$	=	*0*	mm	Centre-centre spacing bolt s1	=	*70*	mm
$L_{perpendicular\ force}$	=	*2280*	mm	Edge distance bolt e2	=	*22*	mm
Position perpendicular force	=	*1*	(⌉=1, ⌋=2)	Boltquality 4.6/5.6/8.8/10.9	=	*4,6*	
Column profile?	=	*1*	no=1, yes=2	Rolled screw threads	=	*1*	
Thickness tie plate	=	*5*	mm	Dubble strap joint no=1, yes=2	=	*1*	

Summary checks :

1 - Check tension on member :

$UC_1 = N_{Ed} / N_{t.Rd}$ = **0,23** **< 1**

2 - Check perpendicular force on member :

$UC_2 = M_{Ed} / M_{c.Rd}$ = **1,19** **> 1 !!**

3 - Check of the member slenderness :

$UC_3 = C_{max;buc} / C_{perm}$ = **237** **< 200 or 240**

4 - Check stress in member due to compression without excentricity:

$UC_4 = N_{E;d} / (C_{max;buc} \times N_{b;Rd})$ = **n.v.t.** **< 1**

5 - Check stress in member due to compression with excentricity:

$UC_{5-1} = N_{E;d} / (C_{max;buc} \times N_{b;Rd})$ = **0,57** **< 1**

$UC_{5-2} = N_{E;d} / N_{b;Rd} + k_{yy} \times (M_{y;Ed} + DM_{y;Ed}) / (C_{LT} \times M_{y;Rk})$ = **0,70** **< 1**

6 - Check stress with combined buckling of two sections:

$UC_{5-1} = N_{E;d} / (C_{max;buc} \times N_{b;Rd})$ = **n.v.t.** **< 1**

$UC_{5-2} = N_{E;d} / N_{b;Rd} + k_{yy} \times (M_{y;Ed} + DM_{y;Ed}) / (C_{LT} \times M_{y;Rk})$ = **n.v.t.** **< 1**

7 - Check shear stress boltconnection:

$UC_7 = F_{v;Ed} / F_{v;Rd}$ = **0,29** **< 1**

8 - Check bearing stress boltconnection:

$UC_8 = F_{b;Ed} / F_{b;Rd}$ = **0,48** **< 1**

Remarks:

The maximum increase of stress or totalstress is(*2) : **$U.C_{max}$ = 1,19 = 119%**

(*1) Eventually, with the checks of the stresses, the cross-section reduction method is used according to prEN 1993-1-5.

(*2) The total stress or increase of stress has been related to the permissible stress.

Revision :	0	A	B	C	D	E	F
Date :	5-feb-2014						
Name :	M. Glegola						
Checked :	J. Hollaar						

Referentienr :	13039140509	**Berekening :**	B.14008
Project	: 150 kV lijn Leiden - Zoetermeer		
Part	: mast 52		

D&C ENGINEERING

Check equal leg angle-members according to Eurocode 3, prEN 1993-1-1 : 2003

File prEN 1993-1-1.revB.xls d.d. 2-32012, JG

Check section: *Vak 1 - 3e hor. knikverkorters* **verzwaard**

Memberforces : **(Attention! pressure = "-" and tension ="+")**

Compression:	N_{Sd}	=	*-8,8*	kN	***Combined forces diagonal:***			
Tension:	N_{Sd}	=	*8,8*	kN	$N_{comb1;c;s;d}$ (min. Compr. or tension)	=	*0*	kN
	$F_{perpend.;s;d}$	=	*1,5*	kN	$N_{comb2;c;s;d}$ (max. compression)	=	*0*	kN

Angle profile : *H50/50/8* (*1)

h	=	*50*	mm	I_y	=	*162828*	mm^4
b	=	*50*	mm	$W_{y;el;eff.1}$	=	*4684*	mm^3
t_f	=	*8*	mm	$W_{y;el;eff.2}$	=	*10685*	mm^3
y_s	=	*15,2*	mm	i_y	=	*14,8*	mm
A_{bruto}	=	*741*	mm^2	i_v	=	*9,6*	mm

Material :

Mat. qual. Fe360 / Fe510	=	*Fe360*		Permissible stress $f_{y;d}$	=	*235,0*	N/mm^2

Geometry section and bolts:

$L_{y;cr}$	=	*2280*	mm	No. bolts / end / flange	=	*1*	
$L_{v;cr}$	=	*2280*	mm	Type of bolts M / "	=	*16*	
$L_{tot\ (with\ comb.\ buckling)}$	=	*0*	mm	End distance bolt e1	=	*25*	mm
$a*L_{tot\ (with\ comb.\ buckling)}$	=	*0*	mm	Centre-centre spacing bolt s1	=	*70*	mm
$L_{perpendicular\ force}$	=	*2280*	mm	Edge distance bolt e2	=	*22*	mm
Position perpendicular force	=	*1*	(⌉=1, ⌋=2)	Boltquality 4.6/5.6/8.8/10.9	=	*8,8*	
Column profile?	=	*1*	no=1, yes=2	Rolled screw threads	=	*1*	
Thickness tie plate	=	*5*	mm	Dubble strap joint no=1, yes=2	=	*1*	

Summary checks :

1 - Check tension on member :

$UC_1 = N_{Ed} / N_{t.Rd}$ = **0,15** **< 1**

2 - Check perpendicular force on member :

$UC_2 = M_{Ed} / M_{c.Rd}$ = **0,78** **< 1**

3 - Check of the member slenderness :

$UC_3 = C_{max;buc} / C_{perm}$ = **238** **< 200 or 240**

4 - Check stress in member due to compression without excentricity:

$UC_4 = N_{E;d} / (C_{max;buc} \times N_{b;Rd})$ = **n.v.t.** **< 1**

5 - Check stress in member due to compression with excentricity:

$UC_{5-1} = N_{E;d} / (C_{max;buc} \times N_{b;Rd})$ = **0,37** **< 1**

$UC_{5-2} = N_{E;d} / N_{b;Rd} + k_{yy} \times (M_{y;Ed} + DM_{y;Ed}) / (C_{LT} \times M_{y;Rk})$ = **0,47** **< 1**

6 - Check stress with combined buckling of two sections:

$UC_{5-1} = N_{E;d} / (C_{max;buc} \times N_{b;Rd})$ = **n.v.t.** **< 1**

$UC_{5-2} = N_{E;d} / N_{b;Rd} + k_{yy} \times (M_{y;Ed} + DM_{y;Ed}) / (C_{LT} \times M_{y;Rk})$ = **n.v.t.** **< 1**

7 - Check shear stress boltconnection:

$UC_7 = F_{v;Ed} / F_{v;Rd}$ = **0,15** **< 1**

8 - Check bearing stress boltconnection:

$UC_8 = F_{b;Ed} / F_{b;Rd}$ = **0,48** **< 1**

Remarks:

The maximum increase of stress or totalstress is(*2) : **$U.C_{max}$ = 0,78 = 78%**

(*1) Eventually, with the checks of the stresses, the cross-section reduction method is used according to prEN 1993-1-5.

(*2) The total stress or increase of stress has been related to the permissible stress.

Revision :	0	A	B	C	D	E	F
Date :	5-feb-2014						
Name :	M. Glegola						
Checked :	J. Hollaar						

Referentienr :	13039140509	**Berekening :**	B.14008
Project	: 150 kV lijn Leiden - Zoetermeer		
Part	: mast 52		

D&C ENGINEERING

Check equal leg angle-members according to Eurocode 3, prEN 1993-1-1 : 2003

File prEN 1993-1-1.revB.xls d.d. 2-32012, JG

Check section: *Vak 1 - 4e hor. knikverkorters*

Memberforces : **(Attention! pressure = "-" and tension ="+")**

Compression:	N_{Sd}	=	*-8,8*	kN	***Combined forces diagonal:***			
Tension:	N_{Sd}	=	*8,8*	kN	$N_{comb1;c;s;d}$ (min. Compr. or tension)	=	*0*	kN
	$F_{perpend.;s;d}$	=	*1,5*	kN	$N_{comb2;c;s;d}$ (max. compression)	=	*0*	kN

Angle profile : *H60/60/6* (*1)

h	=	*60*	mm	I_y	=	*227925*	mm^4
b	=	*60*	mm	$W_{y;el;eff.1}$	=	*5285*	mm^3
t_f	=	*6*	mm	$W_{y;el;eff.2}$	=	*13507*	mm^3
y_s	=	*16,9*	mm	i_y	=	*18,2*	mm
A_{bruto}	=	*691*	mm^2	i_v	=	*11,5*	mm

Material :

Mat. qual. Fe360 / Fe510	=	*Fe360*		Permissible stress $f_{y;d}$	=	*235,0*	N/mm^2

Geometry section and bolts:

$L_{y;cr}$	=	*3040*	mm	No. bolts / end / flange	=	*1*	
$L_{v;cr}$	=	*3040*	mm	Type of bolts M / "	=	*16*	
$L_{tot\ (with\ comb.\ buckling)}$	=	*0*	mm	End distance bolt e1	=	*25*	mm
$a^*L_{tot\ (with\ comb.\ buckling)}$	=	*0*	mm	Centre-centre spacing bolt s1	=	*70*	mm
$L_{perpendicular\ force}$	=	*3040*	mm	Edge distance bolt e2	=	*22*	mm
Position perpendicular force	=	*1*	(⌉=1, ⌋=2)	Boltquality 4.6/5.6/8.8/10.9	=	*4,6*	
Column profile?	=	*1*	no=1, yes=2	Rolled screw threads	=	*1*	
Thickness tie plate	=	*5*	mm	Dubble strap joint no=1, yes=2	=	*1*	

Summary checks :

1 - Check tension on member :

$UC_1 = N_{Ed} / N_{t.Rd}$ = **0,20** **< 1**

2 - Check perpendicular force on member :

$UC_2 = M_{Ed} / M_{c.Rd}$ = **0,92** **< 1**

3 - Check of the member slenderness :

$UC_3 = C_{max;buc} / C_{perm}$ = **263** **< 200 or 240**

4 - Check stress in member due to compression without excentricity:

$UC_4 = N_{E;d} / (C_{max;buc} \times N_{b;Rd})$ = **n.v.t.** **< 1**

5 - Check stress in member due to compression with excentricity:

$UC_{5-1} = N_{E;d} / (C_{max;buc} \times N_{b;Rd})$ = **0,48** **< 1**

$UC_{5-2} = N_{E;d} / N_{b;Rd} + k_{yy} \times (M_{y;Ed} + DM_{y;Ed}) / (C_{LT} \times M_{y;Rk})$ = **0,58** **< 1**

6 - Check stress with combined buckling of two sections:

$UC_{5-1} = N_{E;d} / (C_{max;buc} \times N_{b;Rd})$ = **n.v.t.** **< 1**

$UC_{5-2} = N_{E;d} / N_{b;Rd} + k_{yy} \times (M_{y;Ed} + DM_{y;Ed}) / (C_{LT} \times M_{y;Rk})$ = **n.v.t.** **< 1**

7 - Check shear stress boltconnection:

$UC_7 = F_{v;Ed} / F_{v;Rd}$ = **0,29** **< 1**

8 - Check bearing stress boltconnection:

$UC_8 = F_{b;Ed} / F_{b;Rd}$ = **0,48** **< 1**

Remarks:

The maximum increase of stress or totalstress is(*2) : **$U.C_{max}$ = 0,92 = 92%**

(*1) Eventually, with the checks of the stresses, the cross-section reduction method is used according to prEN 1993-1-5.

(*2) The total stress or increase of stress has been related to the permissible stress.

Revision :	0	A	B	C	D	E	F
Date :	5-feb-2014						
Name :	M. Glegola						
Checked :	J. Hollaar						

Referentienr :	13039140509	**Berekening :**	B.14008
Project	: 150 kV lijn Leiden - Zoetermeer		
Part	: mast 52		

D&C ENGINEERING

Check equal leg angle-members according to Eurocode 3, prEN 1993-1-1 : 2003

File prEN 1993-1-1.revB.xls d.d. 2-32012, JG

Check section: *Vak 1* *1e en 2e schuine knikverkorters*

Memberforces : **(Attention! pressure = "-" and tension ="+")**

Compression:	N_{Sd}	=	*-25,1*	kN	***Combined forces diagonal:***			
Tension:	N_{Sd}	=	*25,1*	kN	$N_{comb1;c;s;d}$ (min. Compr. or tension)	=	*0*	kN
	$F_{perpend.;s;d}$	=		kN	$N_{comb2;c;s;d}$ (max. compression)	=	*0*	kN

Angle profile : *H50/40/5* (*1)

h	=	*50*	mm	I_y	=	*103800*	mm^4
b	=	*40*	mm	$W_{y;el;eff.1}$	=	*2638*	mm^3
t_f	=	*5*	mm	$W_{y;el;eff.2}$	=	*9746*	mm^3
y_s	=	*10,7*	mm	i_y	=	*15,6*	mm
A_{bruto}	=	*427*	mm^2	i_v	=	*8,4*	mm

Material :

Mat. qual. Fe360 / Fe510	=	*Fe360*		Permissible stress $f_{y;d}$	=	*235,0*	N/mm^2

Geometry section and bolts:

$L_{y;cr}$	=	*2169*	mm	No. bolts / end / flange	=	*1*	
$L_{v;cr}$	=	*2169*	mm	Type of bolts M / "	=	*16*	
$L_{tot\ (with\ comb.\ buckling)}$	=	*0*	mm	End distance bolt e1	=	*25*	mm
$a*L_{tot\ (with\ comb.\ buckling)}$	=	*0*	mm	Centre-centre spacing bolt s1	=	*70*	mm
$L_{perpendicular\ force}$	=	*0*	mm	Edge distance bolt e2	=	*22*	mm
Position perpendicular force	=	*1*	(⌉=1, ⌋=2)	Boltquality 4.6/5.6/8.8/10.9	=	*4,6*	
Column profile?	=	*1*	no=1, yes=2	Rolled screw threads	=	*1*	
Thickness tie plate	=	*8*	mm	Dubble strap joint no=1, yes=2	=	*2*	

Summary checks :

1 - Check tension on member :

$UC_1 = N_{Ed} / N_{t.Rd}$ = **0,67** **< 1**

2 - Check perpendicular force on member :

$UC_2 = M_{Ed} / M_{c.Rd}$ = **n.v.t.** **< 1**

3 - Check of the member slenderness :

$UC_3 = C_{max;buc} / C_{perm}$ = **258** **< 200 or 240**

4 - Check stress in member due to compression without excentricity:

$UC_4 = N_{E;d} / (C_{max;buc} \times N_{b;Rd})$ = **n.v.t.** **< 1**

5 - Check stress in member due to compression with excentricity:

$UC_{5-1} = N_{E;d} / (C_{max;buc} \times N_{b;Rd})$ = **2,14** **> 1 !!**

$UC_{5-2} = N_{E;d} / N_{b;Rd} + k_{yy} \times (M_{y;Ed} + DM_{y;Ed}) / (C_{LT} \times M_{y;Rk})$ = **2,35** **> 1 !!**

6 - Check stress with combined buckling of two sections:

$UC_{5-1} = N_{E;d} / (C_{max;buc} \times N_{b;Rd})$ = **n.v.t.** **< 1**

$UC_{5-2} = N_{E;d} / N_{b;Rd} + k_{yy} \times (M_{y;Ed} + DM_{y;Ed}) / (C_{LT} \times M_{y;Rk})$ = **n.v.t.** **< 1**

7 - Check shear stress boltconnection:

$UC_7 = F_{v;Ed} / F_{v;Rd}$ = **0,42** **< 1**

8 - Check bearing stress boltconnection:

$UC_8 = F_{b;Ed} / F_{b;Rd}$ = **1,37** **> 1 !!**

Remarks:

The maximum increase of stress or totalstress is(*2) : **$U.C_{max}$ = 2,35 = 235%**

(*1) Eventually, with the checks of the stresses, the cross-section reduction method is used according to prEN 1993-1-5.

(*2) The total stress or increase of stress has been related to the permissible stress.

Revision :	0	A	B	C	D	E	F
Date :	5-feb-2014						
Name :	M. Glegola						
Checked :	J. Hollaar						

Referentienr :	13039140509	**Berekening :**	B.14008
Project	: 150 kV lijn Leiden - Zoetermeer		
Part	: mast 52		

D&C ENGINEERING

Check equal leg angle-members according to Eurocode 3, prEN 1993-1-1 : 2003

File prEN 1993-1-1.revB.xls d.d. 2-32012, JG

Check section: *Vak 1* *1e,2e schuine knikverkorters L50/40/5* **verzwaard**

Memberforces : **(Attention! pressure = "-" and tension ="+")**

Compression:	N_{Sd}	=	*-25,1*	kN	***Combined forces diagonal:***			
Tension:	N_{Sd}	=	*25,1*	kN	$N_{comb1;c;s;d}$ (min. Compr. or tension)	=	*0*	kN
	$F_{perpend.;s;d}$	=		kN	$N_{comb2;c;s;d}$ (max. compression)	=	*0*	kN

Angle profile : *H60/60/8* (*1)

h	=	*60*	mm	I_y	=	*291532*	mm^4
b	=	*60*	mm	$W_{y;el;eff.1}$	=	*6890*	mm^3
t_f	=	*8*	mm	$W_{y;el;eff.2}$	=	*16481*	mm^3
y_s	=	*17,7*	mm	i_y	=	*18,0*	mm
A_{bruto}	=	*903*	mm^2	i_v	=	*11,5*	mm

Material :

Mat. qual. Fe360 / Fe510	=	*Fe360*		Permissible stress $f_{y;d}$	=	*235,0*	N/mm^2

Geometry section and bolts:

$L_{y;cr}$	=	*2169*	mm	No. bolts / end / flange	=	*1*	
$L_{v;cr}$	=	*723*	mm	Type of bolts M / "	=	*16*	
L_{tot} (with comb. buckling)	=	*0*	mm	End distance bolt e1	=	*25*	mm
$a*L_{tot}$ (with comb. buckling)	=	*0*	mm	Centre-centre spacing bolt s1	=	*70*	mm
$L_{perpendicular\ force}$	=	*0*	mm	Edge distance bolt e2	=	*22*	mm
Position perpendicular force	=	*1*	(⌉=1, ⌋=2)	Boltquality 4.6/5.6/8.8/10.9	=	*8,8*	
Column profile?	=	*1*	no=1, yes=2	Rolled screw threads	=	*1*	
Thickness tie plate	=	*10*	mm	Dubble strap joint no=1, yes=2	=	*2*	

Summary checks :

1 - Check tension on member :

$UC_1 = N_{Ed} / N_{t.Rd}$ = **0,42** **< 1**

2 - Check perpendicular force on member :

$UC_2 = M_{Ed} / M_{c.Rd}$ = **n.v.t.** **< 1**

3 - Check of the member slenderness :

$UC_3 = C_{max;buc} / C_{perm}$ = **121** **< 200 or 240**

4 - Check stress in member due to compression without excentricity:

$UC_4 = N_{E;d} / (C_{max;buc} \times N_{b;Rd})$ = **n.v.t.** **< 1**

5 - Check stress in member due to compression with excentricity:

$UC_{5-1} = N_{E;d} / (C_{max;buc} \times N_{b;Rd})$ = **0,27** **< 1**

$UC_{5-2} = N_{E;d} / N_{b;Rd} + k_{yy} \times (M_{y;Ed} + DM_{y;Ed}) / (C_{LT} \times M_{y;Rk})$ = **0,49** **< 1**

6 - Check stress with combined buckling of two sections:

$UC_{5-1} = N_{E;d} / (C_{max;buc} \times N_{b;Rd})$ = **n.v.t.** **< 1**

$UC_{5-2} = N_{E;d} / N_{b;Rd} + k_{yy} \times (M_{y;Ed} + DM_{y;Ed}) / (C_{LT} \times M_{y;Rk})$ = **n.v.t.** **< 1**

7 - Check shear stress boltconnection:

$UC_7 = F_{v;Ed} / F_{v;Rd}$ = **0,21** **< 1**

8 - Check bearing stress boltconnection:

$UC_8 = F_{b;Ed} / F_{b;Rd}$ = **0,85** **< 1**

Remarks:

The maximum increase of stress or totalstress is(*2) : **$U.C_{max}$ = 0,85 = 85%**

(*1) Eventually, with the checks of the stresses, the cross-section reduction method is used according to prEN 1993-1-5.

(*2) The total stress or increase of stress has been related to the permissible stress.

Revision :	0	A	B	C	D	E	F
Date :	5-feb-2014						
Name :	M. Glegola						
Checked :	J. Hollaar						

Referentienr :	13039140509	**Berekening :**	B.14008
Project	: 150 kV lijn Leiden - Zoetermeer		
Part	: mast 52		

D&C ENGINEERING

Check equal leg angle-members according to Eurocode 3, prEN 1993-1-1 : 2003

File prEN 1993-1-1.revB.xls d.d. 2-32012, JG

Check section: *Vak 1 - 3e schuine knikverkorters*

Memberforces : **(Attention! pressure = "-" and tension ="+")**

Compression:	N_{Sd}	=	*-10,9*	kN	***Combined forces diagonal:***			
Tension:	N_{Sd}	=	*10,9*	kN	$N_{comb1;c;s;d}$ (min. Compr. or tension)	=	*0*	kN
	$F_{perpend.;s;d}$	=	*0*	kN	$N_{comb2;c;s;d}$ (max. compression)	=	*0*	kN

Angle profile : *H50/40/5* (*1)

h	=	*50*	mm	I_y	=	*103800*	mm^4
b	=	*40*	mm	$W_{y;el;eff.1}$	=	*2638*	mm^3
t_f	=	*5*	mm	$W_{y;el;eff.2}$	=	*9746*	mm^3
y_s	=	*10,7*	mm	i_y	=	*15,6*	mm
A_{bruto}	=	*427*	mm^2	i_v	=	*8,4*	mm

Material :

Mat. qual. Fe360 / Fe510	=	*Fe360*		Permissible stress $f_{y;d}$	=	*235,0*	N/mm^2

Geometry section and bolts:

$L_{y;cr}$	=	*2827*	mm	No. bolts / end / flange	=	*1*	
$L_{v;cr}$	=	*2827*	mm	Type of bolts M / "	=	*16*	
$L_{tot\ (with\ comb.\ buckling)}$	=	*0*	mm	End distance bolt e1	=	*25*	mm
$a*L_{tot\ (with\ comb.\ buckling)}$	=	*0*	mm	Centre-centre spacing bolt s1	=	*70*	mm
$L_{perpendicular\ force}$	=	*0*	mm	Edge distance bolt e2	=	*22*	mm
Position perpendicular force	=	*1*	(⌉=1, ⌋=2)	Boltquality 4.6/5.6/8.8/10.9	=	*4,6*	
Column profile?	=	*1*	no=1, yes=2	Rolled screw threads	=	*1*	
Thickness tie plate	=	*7*	mm	Dubble strap joint no=1, yes=2	=	*2*	

Summary checks :

1 - Check tension on member :

$UC_1 = N_{Ed} / N_{t.Rd}$ = **0,29** **< 1**

2 - Check perpendicular force on member :

$UC_2 = M_{Ed} / M_{c.Rd}$ = **n.v.t.** **< 1**

3 - Check of the member slenderness :

$UC_3 = C_{max;buc} / C_{perm}$ = **336** **< 200 or 240**

4 - Check stress in member due to compression without excentricity:

$UC_4 = N_{E;d} / (C_{max;buc} \times N_{b;Rd})$ = **n.v.t.** **< 1**

5 - Check stress in member due to compression with excentricity:

$UC_{5-1} = N_{E;d} / (C_{max;buc} \times N_{b;Rd})$ = **1,53** **> 1 !!**

$UC_{5-2} = N_{E;d} / N_{b;Rd} + k_{yy} \times (M_{y;Ed} + DM_{y;Ed}) / (C_{LT} \times M_{y;Rk})$ = **1,64** **> 1 !!**

6 - Check stress with combined buckling of two sections:

$UC_{5-1} = N_{E;d} / (C_{max;buc} \times N_{b;Rd})$ = **n.v.t.** **< 1**

$UC_{5-2} = N_{E;d} / N_{b;Rd} + k_{yy} \times (M_{y;Ed} + DM_{y;Ed}) / (C_{LT} \times M_{y;Rk})$ = **n.v.t.** **< 1**

7 - Check shear stress boltconnection:

$UC_7 = F_{v;Ed} / F_{v;Rd}$ = **0,18** **< 1**

8 - Check bearing stress boltconnection:

$UC_8 = F_{b;Ed} / F_{b;Rd}$ = **0,59** **< 1**

Remarks:

The maximum increase of stress or totalstress is(*2) : **$U.C_{max}$ = 1,64 = 164%**

(*1) Eventually, with the checks of the stresses, the cross-section reduction method is used according to prEN 1993-1-5.

(*2) The total stress or increase of stress has been related to the permissible stress.

Revision :	0	A	B	C	D	E	F
Date :	5-feb-2014						
Name :	M. Glegola						
Checked :	J. Hollaar						

Referentienr :	13039140509	**Berekening :**	B.14008
Project	: 150 kV lijn Leiden - Zoetermeer		
Part	: mast 52		

D&C ENGINEERING

Check equal leg angle-members according to Eurocode 3, prEN 1993-1-1 : 2003

File prEN 1993-1-1.revB.xls d.d. 2-32012, JG

Check section: *Vak 1 - 3e schuine knikverkorters* **verzwaard**

Memberforces : **(Attention! pressure = "-" and tension ="+")**

Compression:	N_{Sd}	=	*-10,9*	kN	***Combined forces diagonal:***			
Tension:	N_{Sd}	=	*10,9*	kN	$N_{comb1;c;s;d}$ (min. Compr. or tension)	=	*0*	kN
	$F_{perpend.;s;d}$	=	*0*	kN	$N_{comb2;c;s;d}$ (max. compression)	=	*0*	kN

Angle profile : *H50/40/5* (*1)

h	=	*50*	mm	I_y	=	*103800*	mm^4
b	=	*40*	mm	$W_{y;el;eff.1}$	=	*2638*	mm^3
t_f	=	*5*	mm	$W_{y;el;eff.2}$	=	*9746*	mm^3
y_s	=	*10,7*	mm	i_y	=	*15,6*	mm
A_{bruto}	=	*427*	mm^2	i_v	=	*8,4*	mm

Material :

Mat. qual. Fe360 / Fe510	=	*Fe360*		Permissible stress $f_{y;d}$	=	*235,0*	N/mm^2

Geometry section and bolts:

$L_{y;cr}$	=	*2827*	mm	No. bolts / end / flange	=	*1*	
$L_{v;cr}$	=	*723*	mm	Type of bolts M / "	=	*16*	
$L_{tot\ (with\ comb.\ buckling)}$	=	*0*	mm	End distance bolt e1	=	*25*	mm
$a*L_{tot\ (with\ comb.\ buckling)}$	=	*0*	mm	Centre-centre spacing bolt s1	=	*70*	mm
$L_{perpendicular\ force}$	=	*0*	mm	Edge distance bolt e2	=	*22*	mm
Position perpendicular force	=	*1*	(⌉=1, ⌋=2)	Boltquality 4.6/5.6/8.8/10.9	=	*4,6*	
Column profile?	=	*1*	no=1, yes=2	Rolled screw threads	=	*1*	
Thickness tie plate	=	*7*	mm	Dubble strap joint no=1, yes=2	=	*2*	

Summary checks :

1 - Check tension on member :

$UC_1 = N_{Ed} / N_{t.Rd}$ = **0,29** **< 1**

2 - Check perpendicular force on member :

$UC_2 = M_{Ed} / M_{c.Rd}$ = **n.v.t.** **< 1**

3 - Check of the member slenderness :

$UC_3 = C_{max;buc} / C_{perm}$ = **181** **< 200 or 240**

4 - Check stress in member due to compression without excentricity:

$UC_4 = N_{E;d} / (C_{max;buc} \times N_{b;Rd})$ = **n.v.t.** **< 1**

5 - Check stress in member due to compression with excentricity:

$UC_{5-1} = N_{E;d} / (C_{max;buc} \times N_{b;Rd})$ = **0,49** **< 1**

$UC_{5-2} = N_{E;d} / N_{b;Rd} + k_{yy} \times (M_{y;Ed} + DM_{y;Ed}) / (C_{LT} \times M_{y;Rk})$ = **0,61** **< 1**

6 - Check stress with combined buckling of two sections:

$UC_{5-1} = N_{E;d} / (C_{max;buc} \times N_{b;Rd})$ = **n.v.t.** **< 1**

$UC_{5-2} = N_{E;d} / N_{b;Rd} + k_{yy} \times (M_{y;Ed} + DM_{y;Ed}) / (C_{LT} \times M_{y;Rk})$ = **n.v.t.** **< 1**

7 - Check shear stress boltconnection:

$UC_7 = F_{v;Ed} / F_{v;Rd}$ = **0,18** **< 1**

8 - Check bearing stress boltconnection:

$UC_8 = F_{b;Ed} / F_{b;Rd}$ = **0,59** **< 1**

Remarks:

The maximum increase of stress or totalstress is(*2) : **$U.C_{max}$ = 0,61 = 61%**

(*1) Eventually, with the checks of the stresses, the cross-section reduction method is used according to prEN 1993-1-5.

(*2) The total stress or increase of stress has been related to the permissible stress.

Revision :	0	A	B	C	D	E	F
Date :	5-feb-2014						
Name :	M. Glegola						
Checked :	J. Hollaar						

Referentienr :	13039140509	**Berekening :**	B.14008
Project	: 150 kV lijn Leiden - Zoetermeer		
Part	: mast 52		

D&C ENGINEERING

Check equal leg angle-members according to Eurocode 3, prEN 1993-1-1 : 2003

File prEN 1993-1-1.revB.xls d.d. 2-32012, JG

Check section: *Vak 1* *4e schuine knikverkorters*

Memberforces : **(Attention! pressure = "-" and tension ="+")**

Compression:	N_{Sd}	=	*-9,8*	kN	***Combined forces diagonal:***			
Tension:	N_{Sd}	=	*9,8*	kN	$N_{comb1;c;s;d}$ (min. Compr. or tension)	=	*0*	kN
	$F_{perpend.;s;d}$	=	*0*	kN	$N_{comb2;c;s;d}$ (max. compression)	=	*0*	kN

Angle profile : *H50/50/5* (*1)

h	=	*50*	mm	I_y	=	*109643*	mm^4
b	=	*50*	mm	$W_{y;el;eff.1}$	=	*3049*	mm^3
t_f	=	*5*	mm	$W_{y;el;eff.2}$	=	*7811*	mm^3
y_s	=	*14,0*	mm	i_y	=	*15,1*	mm
A_{bruto}	=	*480*	mm^2	i_v	=	*9,6*	mm

Material :

Mat. qual. Fe360 / Fe510	=	*Fe360*		Permissible stress $f_{y;d}$	=	*235,0*	N/mm^2

Geometry section and bolts:

$L_{y;cr}$	=	*3371*	mm	No. bolts / end / flange	=	*1*	
$L_{v;cr}$	=	*3371*	mm	Type of bolts M / "	=	*16*	
$L_{tot\ (with\ comb.\ buckling)}$	=	*0*	mm	End distance bolt e1	=	*25*	mm
$a*L_{tot\ (with\ comb.\ buckling)}$	=	*0*	mm	Centre-centre spacing bolt s1	=	*70*	mm
$L_{perpendicular\ force}$	=	*0*	mm	Edge distance bolt e2	=	*22*	mm
Position perpendicular force	=	*1*	(⌉=1, ⌋=2)	Boltquality 4.6/5.6/8.8/10.9	=	*4,6*	
Column profile?	=	*1*	no=1, yes=2	Rolled screw threads	=	*1*	
Thickness tie plate	=	*6*	mm	Dubble strap joint no=1, yes=2	=	*2*	

Summary checks :

1 - Check tension on member :

$UC_1 = N_{Ed} / N_{t.Rd}$ = **0,26** **< 1**

2 - Check perpendicular force on member :

$UC_2 = M_{Ed} / M_{c.Rd}$ = **n.v.t.** **< 1**

3 - Check of the member slenderness :

$UC_3 = C_{max;buc} / C_{perm}$ = **351** **< 200 or 240**

4 - Check stress in member due to compression without excentricity:

$UC_4 = N_{E;d} / (C_{max;buc} \times N_{b;Rd})$ = **n.v.t.** **< 1**

5 - Check stress in member due to compression with excentricity:

$UC_{5-1} = N_{E;d} / (C_{max;buc} \times N_{b;Rd})$ = **1,32** **> 1 !!**

$UC_{5-2} = N_{E;d} / N_{b;Rd} + k_{yy} \times (M_{y;Ed} + DM_{y;Ed}) / (C_{LT} \times M_{y;Rk})$ = **1,45** **> 1 !!**

6 - Check stress with combined buckling of two sections:

$UC_{5-1} = N_{E;d} / (C_{max;buc} \times N_{b;Rd})$ = **n.v.t.** **< 1**

$UC_{5-2} = N_{E;d} / N_{b;Rd} + k_{yy} \times (M_{y;Ed} + DM_{y;Ed}) / (C_{LT} \times M_{y;Rk})$ = **n.v.t.** **< 1**

7 - Check shear stress boltconnection:

$UC_7 = F_{v;Ed} / F_{v;Rd}$ = **0,16** **< 1**

8 - Check bearing stress boltconnection:

$UC_8 = F_{b;Ed} / F_{b;Rd}$ = **0,53** **< 1**

Remarks:

The maximum increase of stress or totalstress is(*2) : $U.C_{max}$ = **1,45** = **145%**

(*1) Eventually, with the checks of the stresses, the cross-section reduction method is used according to prEN 1993-1-5.

(*2) The total stress or increase of stress has been related to the permissible stress.

Revision :	0	A	B	C	D	E	F
Date :	5-feb-2014						
Name :	M. Glegola						
Checked :	J. Hollaar						

Referentienr :	13039140509	**Berekening :**	B.14008
Project	: 150 kV lijn Leiden - Zoetermeer		
Part	: mast 52		

D&C ENGINEERING

Check equal leg angle-members according to Eurocode 3, prEN 1993-1-1 : 2003

File prEN 1993-1-1.revB.xls d.d. 2-32012, JG

Check section: *Vak 1* *4e schuine knikverkorters* **verzwaard**

Memberforces : **(Attention! pressure = "-" and tension ="+")**

Compression:	N_{Sd}	=	-9,8	kN	***Combined forces diagonal:***			
Tension:	N_{Sd}	=	9,8	kN	$N_{comb1;c;s;d}$ (min. Compr. or tension)	=	0	kN
	$F_{perpend.;s;d}$	=	0	kN	$N_{comb2;c;s;d}$ (max. compression)	=	0	kN

Angle profile : *H50/50/5* (*1)

h	=	50	mm	I_y	=	109643	mm^4
b	=	50	mm	$W_{y;el;eff.1}$	=	3049	mm^3
t_f	=	5	mm	$W_{y;el;eff.2}$	=	7811	mm^3
y_s	=	14,0	mm	i_y	=	15,1	mm
A_{bruto}	=	480	mm^2	i_v	=	9,6	mm

Material :

Mat. qual. Fe360 / Fe510	=	Fe360		Permissible stress $f_{y;d}$	=	235,0	N/mm^2

Geometry section and bolts:

$L_{y;cr}$	=	3371	mm	No. bolts / end / flange	=	1	
$L_{v;cr}$	=	1124	mm	Type of bolts M / "	=	16	
$L_{tot\ (with\ comb.\ buckling)}$	=	0	mm	End distance bolt e1	=	25	mm
$a*L_{tot\ (with\ comb.\ buckling)}$	=	0	mm	Centre-centre spacing bolt s1	=	70	mm
$L_{perpendicular\ force}$	=	0	mm	Edge distance bolt e2	=	22	mm
Position perpendicular force	=	1	(⌉=1, ⌋=2)	Boltquality 4.6/5.6/8.8/10.9	=	4,6	
Column profile?	=	1	no=1, yes=2	Rolled screw threads	=	1	
Thickness tie plate	=	6	mm	Dubble strap joint no=1, yes=2	=	2	

Summary checks :

1 - Check tension on member :

$UC_1 = N_{Ed} / N_{t.Rd}$ = **0,26** **< 1**

2 - Check perpendicular force on member :

$UC_2 = M_{Ed} / M_{c.Rd}$ = **n.v.t.** **< 1**

3 - Check of the member slenderness :

$UC_3 = C_{max;buc} / C_{perm}$ = **223** **< 200 or 240**

4 - Check stress in member due to compression without excentricity:

$UC_4 = N_{E;d} / (C_{max;buc} \times N_{b;Rd})$ = **n.v.t.** **< 1**

5 - Check stress in member due to compression with excentricity:

$UC_{5-1} = N_{E;d} / (C_{max;buc} \times N_{b;Rd})$ = **0,56** **< 1**

$UC_{5-2} = N_{E;d} / N_{b;Rd} + k_{yy} \times (M_{y;Ed} + DM_{y;Ed}) / (C_{LT} \times M_{y;Rk})$ = **0,74** **< 1**

6 - Check stress with combined buckling of two sections:

$UC_{5-1} = N_{E;d} / (C_{max;buc} \times N_{b;Rd})$ = **n.v.t.** **< 1**

$UC_{5-2} = N_{E;d} / N_{b;Rd} + k_{yy} \times (M_{y;Ed} + DM_{y;Ed}) / (C_{LT} \times M_{y;Rk})$ = **n.v.t.** **< 1**

7 - Check shear stress boltconnection:

$UC_7 = F_{v;Ed} / F_{v;Rd}$ = **0,16** **< 1**

8 - Check bearing stress boltconnection:

$UC_8 = F_{b;Ed} / F_{b;Rd}$ = **0,53** **< 1**

Remarks:

The maximum increase of stress or totalstress is(*2) : **$U.C_{max}$ = 0,74 = 74%**

(*1) Eventually, with the checks of the stresses, the cross-section reduction method is used according to prEN 1993-1-5.

(*2) The total stress or increase of stress has been related to the permissible stress.

Revision :	0	A	B	C	D	E	F
Date :	5-feb-2014						
Name :	M. Glegola						
Checked :	J. Hollaar						

Referentienr :	13039140509	**Berekening :**	B.14008
Project	: 150 kV lijn Leiden - Zoetermeer		
Part	: mast 52		

D&C ENGINEERING

Check equal leg angle-members according to Eurocode 3, prEN 1993-1-1 : 2003

File prEN 1993-1-1.revB.xls d.d. 2-32012, JG

Check section: *Vak 2 - randen*

Memberforces : **(Attention! pressure = "-" and tension ="+")**

Compression:	N_{Sd}	=	*-860,7*	kN	***Combined forces diagonal:***			
Tension:	N_{Sd}	=	*673,2*	kN	$N_{comb1;c;s;d}$ (min. Compr. or tension)	=	*0*	kN
	$F_{perpend.;s;d}$	=	*0*	kN	$N_{comb2;c;s;d}$ (max. compression)	=	*0*	kN

Angle profile : *H140/140/13* (*1)

h	=	*140*	mm	I_y	=	*6385392*	mm^4
b	=	*140*	mm	$W_{y;el;eff.1}$	=	*63366*	mm^3
t_f	=	*13*	mm	$W_{y;el;eff.2}$	=	*162768*	mm^3
y_s	=	*39,2*	mm	i_y	=	*42,7*	mm
A_{bruto}	=	*3495*	mm^2	i_v	=	*27,2*	mm

Material :

Mat. qual. Fe360 / Fe510	=	*Fe360*		Permissible stress $f_{y;d}$	=	*235,0*	N/mm^2

Geometry section and bolts:

$L_{y;cr}$	=	*1687*	mm	No. bolts / end / flange	=	*4*	**(Per flange !)**
$L_{v;cr}$	=	*1687*	mm	Type of bolts M / "	=	*24*	
$L_{tot\ (with\ comb.\ buckling)}$	=	*0*	mm	End distance bolt e1	=	*40*	mm
$a*L_{tot\ (with\ comb.\ buckling)}$	=	*0*	mm	Centre-centre spacing bolt s1	=	*75*	mm
$L_{perpendicular\ force}$	=	*0*	mm	Edge distance bolt e2	=	*40*	mm
Position perpendicular force	=	*1*	(⌉=1, ⌋=2)	Boltquality 4.6/5.6/8.8/10.9	=	*4,6*	
Column profile?	=	*2*	no=1, yes=2	Rolled screw threads	=	*1*	
Thickness tie plate	=	*14*	mm	Dubble strap joint no=1, yes=2	=	*1*	

Summary checks :

1 - Check tension on member :

$UC_1 = N_{Ed} / N_{t.Rd}$ = **0,92** **< 1**

2 - Check perpendicular force on member :

$UC_2 = M_{Ed} / M_{c.Rd}$ = **n.v.t.** **< 1**

3 - Check of the member slenderness :

$UC_3 = C_{max;buc} / C_{perm}$ = **62** **< 120**

4 - Check stress in member due to compression without excentricity:

$UC_4 = N_{E;d} / (C_{max;buc} \times N_{b;Rd})$ = **1,30** **> 1 !!**

5 - Check stress in member due to compression with excentricity:

$UC_{5-1} = N_{E;d} / (C_{max;buc} \times N_{b;Rd})$ = **n.v.t.** **< 1**

$UC_{5-2} = N_{E;d} / N_{b;Rd} + k_{yy} \times (M_{y;Ed} + DM_{y;Ed}) / (C_{LT} \times M_{y;Rk})$ = **n.v.t.** **< 1**

6 - Check stress with combined buckling of two sections:

$UC_{5-1} = N_{E;d} / (C_{max;buc} \times N_{b;Rd})$ = **n.v.t.** **< 1**

$UC_{5-2} = N_{E;d} / N_{b;Rd} + k_{yy} \times (M_{y;Ed} + DM_{y;Ed}) / (C_{LT} \times M_{y;Rk})$ = **n.v.t.** **< 1**

7 - Check shear stress boltconnection:

$UC_7 = F_{v;Ed} / F_{v;Rd}$ = **1,59** **> 1 !!**

8 - Check bearing stress boltconnection:

$UC_8 = F_{b;Ed} / F_{b;Rd}$ = **0,78** **< 1**

Remarks:

The maximum increase of stress or totalstress is(*2) : **$U.C_{max}$ = 1,59 = 159%**

(*1) Eventually, with the checks of the stresses, the cross-section reduction method is used according to prEN 1993-1-5.

(*2) The total stress or increase of stress has been related to the permissible stress.

Revision :	0	A	B	C	D	E	F
Date :	5-feb-2014						
Name :	M. Glegola						
Checked :	J. Hollaar						

Referentienr :	13039140509	**Berekening :**	B.14008
Project	: 150 kV lijn Leiden - Zoetermeer		
Part	: mast 52		

D&C ENGINEERING

Check equal leg angle-members according to Eurocode 3, prEN 1993-1-1 : 2003

File prEN 1993-1-1.revB.xls d.d. 2-32012, JG

Check section: *Vak 2 - diagonalen*

Memberforces : **(Attention! pressure = "-" and tension ="+")**

Compression:	N_{Sd}	=	*-57,8*	kN	***Combined forces diagonal:***			
Tension:	N_{Sd}	=	*64,3*	kN	$N_{comb1;c;s;d}$ (min. Compr. or tension)	=	*0*	kN
	$F_{perpend.;s;d}$	=	*0*	kN	$N_{comb2;c;s;d}$ (max. compression)	=	*0*	kN

Angle profile : *H100/75/7* (*1)

h	=	*100*	mm	I_y	=	*1179878*	mm^4
b	=	*75*	mm	$W_{y;el;eff.1}$	=	*14444*	mm^3
t_f	=	*7*	mm	$W_{y;el;eff.2}$	=	*64418*	mm^3
y_s	=	*18,3*	mm	i_y	=	*31,5*	mm
A_{bruto}	=	*1187*	mm^2	i_v	=	*15,9*	mm

Material :

Mat. qual. Fe360 / Fe510	=	*Fe360*		Permissible stress $f_{y;d}$	=	*235,0*	N/mm^2

Geometry section and bolts:

$L_{y;cr}$	=	*2458*	mm	No. bolts / end / flange	=	*1*	
$L_{v;cr}$	=	*2458*	mm	Type of bolts M / "	=	*24*	
$L_{tot\ (with\ comb.\ buckling)}$	=	*0*	mm	End distance bolt e1	=	*45*	mm
$a*L_{tot\ (with\ comb.\ buckling)}$	=	*0*	mm	Centre-centre spacing bolt s1	=	*70*	mm
$L_{perpendicular\ force}$	=	*0*	mm	Edge distance bolt e2	=	*40*	mm
Position perpendicular force	=	*1*	(⌉=1, ⌋=2)	Boltquality 4.6/5.6/8.8/10.9	=	*4,6*	
Column profile?	=	*1*	no=1, yes=2	Rolled screw threads	=	*1*	
Thickness tie plate	=	*13*	mm	Dubble strap joint no=1, yes=2	=	*1*	

Summary checks :

1 - Check tension on member :

$UC_1 = N_{Ed} / N_{t.Rd}$ = **0,59** **< 1**

2 - Check perpendicular force on member :

$UC_2 = M_{Ed} / M_{c.Rd}$ = **n.v.t.** **< 1**

3 - Check of the member slenderness :

$UC_3 = C_{max;buc} / C_{perm}$ = **154** **< 200 or 240**

4 - Check stress in member due to compression without excentricity:

$UC_4 = N_{E;d} / (C_{max;buc} \times N_{b;Rd})$ = **n.v.t.** **< 1**

5 - Check stress in member due to compression with excentricity:

$UC_{5-1} = N_{E;d} / (C_{max;buc} \times N_{b;Rd})$ = **0,71** **< 1**

$UC_{5-2} = N_{E;d} / N_{b;Rd} + k_{yy} \times (M_{y;Ed} + DM_{y;Ed}) / (C_{LT} \times M_{y;Rk})$ = **0,89** **< 1**

6 - Check stress with combined buckling of two sections:

$UC_{5-1} = N_{E;d} / (C_{max;buc} \times N_{b;Rd})$ = **n.v.t.** **< 1**

$UC_{5-2} = N_{E;d} / N_{b;Rd} + k_{yy} \times (M_{y;Ed} + DM_{y;Ed}) / (C_{LT} \times M_{y;Rk})$ = **n.v.t.** **< 1**

7 - Check shear stress boltconnection:

$UC_7 = F_{v;Ed} / F_{v;Rd}$ = **0,95** **< 1**

8 - Check bearing stress boltconnection:

$UC_8 = F_{b;Ed} / F_{b;Rd}$ = **0,92** **< 1**

Remarks:

The maximum increase of stress or totalstress is(*2) : **$U.C_{max}$ = 0,95 = 95%**

(*1) Eventually, with the checks of the stresses, the cross-section reduction method is used according to prEN 1993-1-5.

(*2) The total stress or increase of stress has been related to the permissible stress.

Revision :	0	A	B	C	D	E	F
Date :	5-feb-2014						
Name :	M. Glegola						
Checked :	J. Hollaar						

Referentienr :	13039140509	**Berekening :**	B.14008
Project	: 150 kV lijn Leiden - Zoetermeer		
Part	: mast 52		

D&C ENGINEERING

Check equal leg angle-members according to Eurocode 3, prEN 1993-1-1 : 2003

File prEN 1993-1-1.revB.xls d.d. 2-32012, JG

Check section: *Vak 2 - hor. kikverkorters*

Memberforces : **(Attention! pressure = "-" and tension ="+")**

Compression:	N_{Sd}	=	-7,5	kN	***Combined forces diagonal:***			
Tension:	N_{Sd}	=	7,5	kN	$N_{comb1;c;s;d}$ (min. Compr. or tension)	=	0	kN
	$F_{perpend.;s;d}$	=	1,5	kN	$N_{comb2;c;s;d}$ (max. compression)	=	0	kN

Angle profile : *H50/40/5* (*1)

h	=	50	mm	I_y	=	103800	mm^4
b	=	40	mm	$W_{y;el;eff.1}$	=	2638	mm^3
t_f	=	5	mm	$W_{y;el;eff.2}$	=	9746	mm^3
y_s	=	10,7	mm	i_y	=	15,6	mm
A_{bruto}	=	427	mm^2	i_v	=	8,4	mm

Material :

Mat. qual. Fe360 / Fe510	=	Fe360		Permissible stress $f_{y;d}$	=	235,0	N/mm^2

Geometry section and bolts:

$L_{y;cr}$	=	1900	mm	No. bolts / end / flange	=	1	
$L_{v;cr}$	=	1900	mm	Type of bolts M / "	=	16	
$L_{tot\ (with\ comb.\ buckling)}$	=	0	mm	End distance bolt e1	=	25	mm
$a*L_{tot\ (with\ comb.\ buckling)}$	=	0	mm	Centre-centre spacing bolt s1	=	70	mm
$L_{perpendicular\ force}$	=	1900	mm	Edge distance bolt e2	=	40	mm
Position perpendicular force	=	1	(⌉=1, ⌋=2)	Boltquality 4.6/5.6/8.8/10.9	=	4,6	
Column profile?	=	1	no=1, yes=2	Rolled screw threads	=	1	
Thickness tie plate	=	13	mm	Dubble strap joint no=1, yes=2	=	1	

Summary checks :

1 - Check tension on member :

$UC_1 = N_{Ed} / N_{t.Rd}$ = **0,08** **< 1**

2 - Check perpendicular force on member :

$UC_2 = M_{Ed} / M_{c.Rd}$ = **1,15** **> 1 !!**

3 - Check of the member slenderness :

$UC_3 = C_{max;buc} / C_{perm}$ = **226** **< 200 or 240**

4 - Check stress in member due to compression without excentricity:

$UC_4 = N_{E;d} / (C_{max;buc} \times N_{b;Rd})$ = **n.v.t.** **< 1**

5 - Check stress in member due to compression with excentricity:

$UC_{5-1} = N_{E;d} / (C_{max;buc} \times N_{b;Rd})$ = **0,50** **< 1**

$UC_{5-2} = N_{E;d} / N_{b;Rd} + k_{yy} \times (M_{y;Ed} + DM_{y;Ed}) / (C_{LT} \times M_{y;Rk})$ = **0,59** **< 1**

6 - Check stress with combined buckling of two sections:

$UC_{5-1} = N_{E;d} / (C_{max;buc} \times N_{b;Rd})$ = **n.v.t.** **< 1**

$UC_{5-2} = N_{E;d} / N_{b;Rd} + k_{yy} \times (M_{y;Ed} + DM_{y;Ed}) / (C_{LT} \times M_{y;Rk})$ = **n.v.t.** **< 1**

7 - Check shear stress boltconnection:

$UC_7 = F_{v;Ed} / F_{v;Rd}$ = **0,25** **< 1**

8 - Check bearing stress boltconnection:

$UC_8 = F_{b;Ed} / F_{b;Rd}$ = **0,28** **< 1**

Remarks:

The maximum increase of stress or totalstress is(*2) : **$U.C_{max}$ = 1,15 = 115%**

(*1) Eventually, with the checks of the stresses, the cross-section reduction method is used according to prEN 1993-1-5.

(*2) The total stress or increase of stress has been related to the permissible stress.

Revision :	0	A	B	C	D	E	F
Date :	5-feb-2014						
Name :	M. Glegola						
Checked :	J. Hollaar						

Referentienr :	13039140509	**Berekening :**	B.14008
Project	: 150 kV lijn Leiden - Zoetermeer		
Part	: mast 52		

D&C ENGINEERING

Check equal leg angle-members according to Eurocode 3, prEN 1993-1-1 : 2003

File prEN 1993-1-1.revB.xls d.d. 2-32012, JG

Check section: *Vak 2 - hor. kikverkorters* **verzwaard**

Memberforces : **(Attention! pressure = "-" and tension ="+")**

Compression:	N_{Sd}	=	-7,5	kN	***Combined forces diagonal:***			
Tension:	N_{Sd}	=	7,5	kN	$N_{comb1;c;s;d}$ (min. Compr. or tension)	=	0	kN
	$F_{perpend.;s;d}$	=	1,5	kN	$N_{comb2;c;s;d}$ (max. compression)	=	0	kN

Angle profile : H50/50/6 (*1)

h	=	50	mm	I_y	=	128406	mm^4
b	=	50	mm	$W_{y;el;eff.1}$	=	3612	mm^3
t_f	=	6	mm	$W_{y;el;eff.2}$	=	8883	mm^3
y_s	=	14,5	mm	i_y	=	15,0	mm
A_{bruto}	=	569	mm^2	i_v	=	9,6	mm

Material :

Mat. qual. Fe360 / Fe510	=	Fe360		Permissible stress $f_{y;d}$	=	235,0	N/mm^2

Geometry section and bolts:

$L_{y;cr}$	=	1900	mm	No. bolts / end / flange	=	1	
$L_{v;cr}$	=	1900	mm	Type of bolts M / "	=	16	
$L_{tot\ (with\ comb.\ buckling)}$	=	0	mm	End distance bolt e1	=	25	mm
$a^*L_{tot\ (with\ comb.\ buckling)}$	=	0	mm	Centre-centre spacing bolt s1	=	70	mm
$L_{perpendicular\ force}$	=	1900	mm	Edge distance bolt e2	=	40	mm
Position perpendicular force	=	1	(⌉=1, ⌋=2)	Boltquality 4.6/5.6/8.8/10.9	=	8,8	
Column profile?	=	1	no=1, yes=2	Rolled screw threads	=	1	
Thickness tie plate	=	13	mm	Dubble strap joint no=1, yes=2	=	1	

Summary checks :

1 - Check tension on member :

$UC_1 = N_{Ed} / N_{t.Rd}$ = **0,07** **< 1**

2 - Check perpendicular force on member :

$UC_2 = M_{Ed} / M_{c.Rd}$ = **0,84** **< 1**

3 - Check of the member slenderness :

$UC_3 = C_{max;buc} / C_{perm}$ = **198** **< 200 or 240**

4 - Check stress in member due to compression without excentricity:

$UC_4 = N_{E;d} / (C_{max;buc} \times N_{b;Rd})$ = **n.v.t.** **< 1**

5 - Check stress in member due to compression with excentricity:

$UC_{5-1} = N_{E;d} / (C_{max;buc} \times N_{b;Rd})$ = **0,29** **< 1**

$UC_{5-2} = N_{E;d} / N_{b;Rd} + k_{yy} \times (M_{y;Ed} + DM_{y;Ed}) / (C_{LT} \times M_{y;Rk})$ = **0,39** **< 1**

6 - Check stress with combined buckling of two sections:

$UC_{5-1} = N_{E;d} / (C_{max;buc} \times N_{b;Rd})$ = **n.v.t.** **< 1**

$UC_{5-2} = N_{E;d} / N_{b;Rd} + k_{yy} \times (M_{y;Ed} + DM_{y;Ed}) / (C_{LT} \times M_{y;Rk})$ = **n.v.t.** **< 1**

7 - Check shear stress boltconnection:

$UC_7 = F_{v;Ed} / F_{v;Rd}$ = **0,12** **< 1**

8 - Check bearing stress boltconnection:

$UC_8 = F_{b;Ed} / F_{b;Rd}$ = **0,23** **< 1**

Remarks:

The maximum increase of stress or totalstress is(*2) : **$U.C_{max}$ = 0,84 = 84%**

(*1) Eventually, with the checks of the stresses, the cross-section reduction method is used according to prEN 1993-1-5.

(*2) The total stress or increase of stress has been related to the permissible stress.

Revision :	0	A	B	C	D	E	F
Date :	5-feb-2014						
Name :	M. Glegola						
Checked :	J. Hollaar						

Referentienr :	13039140509	**Berekening :**	B.14008
Project	: 150 kV lijn Leiden - Zoetermeer		
Part	: mast 52		

D&C ENGINEERING

Check equal leg angle-members according to Eurocode 3, prEN 1993-1-1 : 2003

File prEN 1993-1-1.revB.xls d.d. 2-32012, JG

Check section: *Vak 2* *schuin kikverkorter*

Memberforces : **(Attention! pressure = "-" and tension ="+")**

Compression:	N_{Sd}	=	*-13,7*	kN	***Combined forces diagonal:***			
Tension:	N_{Sd}	=	*13,7*	kN	$N_{comb1;c;s;d}$ (min. Compr. or tension)	=	*0*	kN
	$F_{perpend.;s;d}$	=	*0*	kN	$N_{comb2;c;s;d}$ (max. compression)	=	*0*	kN

Angle profile : *H50/40/5* (*1)

h	=	*50*	mm	I_y	=	*103800*	mm^4
b	=	*40*	mm	$W_{y;el;eff.1}$	=	*2638*	mm^3
t_f	=	*5*	mm	$W_{y;el;eff.2}$	=	*9746*	mm^3
y_s	=	*10,7*	mm	i_y	=	*15,6*	mm
A_{bruto}	=	*427*	mm^2	i_v	=	*8,4*	mm

Material :

Mat. qual. Fe360 / Fe510	=	*Fe360*		Permissible stress $f_{y;d}$	=	*235,0*	N/mm^2

Geometry section and bolts:

$L_{y;cr}$	=	*2621*	mm	No. bolts / end / flange	=	*1*	
$L_{v;cr}$	=	*2621*	mm	Type of bolts M / "	=	*16*	
$L_{tot\ (with\ comb.\ buckling)}$	=	*0*	mm	End distance bolt e1	=	*25*	mm
$a^*L_{tot\ (with\ comb.\ buckling)}$	=	*0*	mm	Centre-centre spacing bolt s1	=	*70*	mm
$L_{perpendicular\ force}$	=	*0*	mm	Edge distance bolt e2	=	*40*	mm
Position perpendicular force	=	*1*	(⌉=1, ⌋=2)	Boltquality 4.6/5.6/8.8/10.9	=	*4,6*	
Column profile?	=	*1*	no=1, yes=2	Rolled screw threads	=	*1*	
Thickness tie plate	=	*13*	mm	Dubble strap joint no=1, yes=2	=	*1*	

Summary checks :

1 - Check tension on member :

$UC_1 = N_{Ed} / N_{t.Rd}$ = **0,15** **< 1**

2 - Check perpendicular force on member :

$UC_2 = M_{Ed} / M_{c.Rd}$ = **n.v.t.** **< 1**

3 - Check of the member slenderness :

$UC_3 = C_{max;buc} / C_{perm}$ = **312** **< 200 or 240**

4 - Check stress in member due to compression without excentricity:

$UC_4 = N_{E;d} / (C_{max;buc} \times N_{b;Rd})$ = **n.v.t.** **< 1**

5 - Check stress in member due to compression with excentricity:

$UC_{5-1} = N_{E;d} / (C_{max;buc} \times N_{b;Rd})$ = **1,66** **> 1 !!**

$UC_{5-2} = N_{E;d} / N_{b;Rd} + k_{yy} \times (M_{y;Ed} + DM_{y;Ed}) / (C_{LT} \times M_{y;Rk})$ = **1,80** **> 1 !!**

6 - Check stress with combined buckling of two sections:

$UC_{5-1} = N_{E;d} / (C_{max;buc} \times N_{b;Rd})$ = **n.v.t.** **< 1**

$UC_{5-2} = N_{E;d} / N_{b;Rd} + k_{yy} \times (M_{y;Ed} + DM_{y;Ed}) / (C_{LT} \times M_{y;Rk})$ = **n.v.t.** **< 1**

7 - Check shear stress boltconnection:

$UC_7 = F_{v;Ed} / F_{v;Rd}$ = **0,45** **< 1**

8 - Check bearing stress boltconnection:

$UC_8 = F_{b;Ed} / F_{b;Rd}$ = **0,51** **< 1**

Remarks:

The maximum increase of stress or totalstress is(*2) : **$U.C_{max}$ = 1,80 = 180%**

(*1) Eventually, with the checks of the stresses, the cross-section reduction method is used according to prEN 1993-1-5.

(*2) The total stress or increase of stress has been related to the permissible stress.

Revision :	0	A	B	C	D	E	F
Date :	5-feb-2014						
Name :	M. Glegola						
Checked :	J. Hollaar						

Referentienr :	13039140509	**Berekening :**	B.14008
Project	: 150 kV lijn Leiden - Zoetermeer		
Part	: mast 52		

D&C ENGINEERING

Check equal leg angle-members according to Eurocode 3, prEN 1993-1-1 : 2003

File prEN 1993-1-1.revB.xls d.d. 2-32012, JG

Check section: *Vak 2 - schuin kikverkorter* **verzwaard**

Memberforces : **(Attention! pressure = "-" and tension ="+")**

Compression:	N_{Sd}	=	-13,7	kN	***Combined forces diagonal:***			
Tension:	N_{Sd}	=	13,7	kN	$N_{comb1;c;s;d}$ (min. Compr. or tension)	=	0	kN
	$F_{perpend.;s;d}$	=	0	kN	$N_{comb2;c;s;d}$ (max. compression)	=	0	kN

Angle profile : H50/50/8 (*1)

h	=	50	mm	I_y	=	162828	mm^4
b	=	50	mm	$W_{y;el;eff.1}$	=	4684	mm^3
t_f	=	8	mm	$W_{y;el;eff.2}$	=	10685	mm^3
y_s	=	15,2	mm	i_y	=	14,8	mm
A_{bruto}	=	741	mm^2	i_v	=	9,6	mm

Material :

Mat. qual. Fe360 / Fe510	=	Fe360		Permissible stress $f_{y;d}$	=	235,0	N/mm^2

Geometry section and bolts:

$L_{y;cr}$	=	2621	mm	No. bolts / end / flange	=	1	
$L_{v;cr}$	=	2621	mm	Type of bolts M / "	=	16	
$L_{tot\ (with\ comb.\ buckling)}$	=	0	mm	End distance bolt e1	=	25	mm
$a^*L_{tot\ (with\ comb.\ buckling)}$	=	0	mm	Centre-centre spacing bolt s1	=	70	mm
$L_{perpendicular\ force}$	=	0	mm	Edge distance bolt e2	=	40	mm
Position perpendicular force	=	1	(⌉=1, ⌋=2)	Boltquality 4.6/5.6/8.8/10.9	=	8,8	
Column profile?	=	1	no=1, yes=2	Rolled screw threads	=	1	
Thickness tie plate	=	13	mm	Dubble strap joint no=1, yes=2	=	1	

Summary checks :

1 - Check tension on member :

$UC_1 = N_{Ed} / N_{t.Rd}$ = **0,10** **< 1**

2 - Check perpendicular force on member :

$UC_2 = M_{Ed} / M_{c.Rd}$ = **n.v.t.** **< 1**

3 - Check of the member slenderness :

$UC_3 = C_{max;buc} / C_{perm}$ = **274** **< 200 or 240**

4 - Check stress in member due to compression without excentricity:

$UC_4 = N_{E;d} / (C_{max;buc} \times N_{b;Rd})$ = **n.v.t.** **< 1**

5 - Check stress in member due to compression with excentricity:

$UC_{5-1} = N_{E;d} / (C_{max;buc} \times N_{b;Rd})$ = **0,75** **< 1**

$UC_{5-2} = N_{E;d} / N_{b;Rd} + k_{yy} \times (M_{y;Ed} + DM_{y;Ed}) / (C_{LT} \times M_{y;Rk})$ = **0,90** **< 1**

6 - Check stress with combined buckling of two sections:

$UC_{5-1} = N_{E;d} / (C_{max;buc} \times N_{b;Rd})$ = **n.v.t.** **< 1**

$UC_{5-2} = N_{E;d} / N_{b;Rd} + k_{yy} \times (M_{y;Ed} + DM_{y;Ed}) / (C_{LT} \times M_{y;Rk})$ = **n.v.t.** **< 1**

7 - Check shear stress boltconnection:

$UC_7 = F_{v;Ed} / F_{v;Rd}$ = **0,23** **< 1**

8 - Check bearing stress boltconnection:

$UC_8 = F_{b;Ed} / F_{b;Rd}$ = **0,32** **< 1**

Remarks:

The maximum increase of stress or totalstress is(*2) : **$U.C_{max}$ = 0,90 = 90%**

(*1) Eventually, with the checks of the stresses, the cross-section reduction method is used according to prEN 1993-1-5.

(*2) The total stress or increase of stress has been related to the permissible stress.

Revision :	0	A	B	C	D	E	F
Date :	5-feb-2014						
Name :	M. Glegola						
Checked :	J. Hollaar						

Referentienr :	13039140509	**Berekening :**	B.14008
Project	: 150 kV lijn Leiden - Zoetermeer		
Part	: mast 52		

D&C ENGINEERING

Check equal leg angle-members according to Eurocode 3, prEN 1993-1-1 : 2003

File prEN 1993-1-1.revB.xls d.d. 2-32012, JG

Check section: *Vak3* *randen*

Memberforces : **(Attention! pressure = "-" and tension ="+")**

Compression:	N_{Sd}	=	*-744,9*	kN	***Combined forces diagonal:***			
Tension:	N_{Sd}	=	*574,4*	kN	$N_{comb1;c;s;d}$ (min. Compr. or tension)	=	*0*	kN
	$F_{perpend.;s;d}$	=	*0*	kN	$N_{comb2;c;s;d}$ (max. compression)	=	*0*	kN

Angle profile : *H140/140/13* (*1)

h	=	*140*	mm	I_y	=	*6385392*	mm^4
b	=	*140*	mm	$W_{y;el;eff.1}$	=	*63366*	mm^3
t_f	=	*13*	mm	$W_{y;el;eff.2}$	=	*162768*	mm^3
y_s	=	*39,2*	mm	i_y	=	*42,7*	mm
A_{bruto}	=	*3495*	mm^2	i_v	=	*27,2*	mm

Material :

Mat. qual. Fe360 / Fe510	=	*Fe360*		Permissible stress $f_{y;d}$	=	*235,0*	N/mm^2

Geometry section and bolts:

$L_{y;cr}$	=	*1768*	mm	No. bolts / end / flange	=	*4*	**(Per flange !)**
$L_{v;cr}$	=	*1768*	mm	Type of bolts M / "	=	*24*	
$L_{tot\ (with\ comb.\ buckling)}$	=	*0*	mm	End distance bolt e1	=	*40*	mm
$a*L_{tot\ (with\ comb.\ buckling)}$	=	*0*	mm	Centre-centre spacing bolt s1	=	*75*	mm
$L_{perpendicular\ force}$	=	*0*	mm	Edge distance bolt e2	=	*40*	mm
Position perpendicular force	=	*1*	(⌉=1, ⌋=2)	Boltquality 4.6/5.6/8.8/10.9	=	*4,6*	
Column profile?	=	*2*	no=1, yes=2	Rolled screw threads	=	*1*	
Thickness tie plate	=	*14*	mm	Dubble strap joint no=1, yes=2	=	*1*	

Summary checks :

1 - Check tension on member :

$UC_1 = N_{Ed} / N_{t.Rd}$ = **0,79** **< 1**

2 - Check perpendicular force on member :

$UC_2 = M_{Ed} / M_{c.Rd}$ = **n.v.t.** **< 1**

3 - Check of the member slenderness :

$UC_3 = C_{max;buc} / C_{perm}$ = **65** **< 120**

4 - Check stress in member due to compression without excentricity:

$UC_4 = N_{E;d} / (C_{max;buc} \times N_{b;Rd})$ = **1,15** **> 1 !!**

5 - Check stress in member due to compression with excentricity:

$UC_{5-1} = N_{E;d} / (C_{max;buc} \times N_{b;Rd})$ = **n.v.t.** **< 1**

$UC_{5-2} = N_{E;d} / N_{b;Rd} + k_{yy} \times (M_{y;Ed} + DM_{y;Ed}) / (C_{LT} \times M_{y;Rk})$ = **n.v.t.** **< 1**

6 - Check stress with combined buckling of two sections:

$UC_{5-1} = N_{E;d} / (C_{max;buc} \times N_{b;Rd})$ = **n.v.t.** **< 1**

$UC_{5-2} = N_{E;d} / N_{b;Rd} + k_{yy} \times (M_{y;Ed} + DM_{y;Ed}) / (C_{LT} \times M_{y;Rk})$ = **n.v.t.** **< 1**

7 - Check shear stress boltconnection:

$UC_7 = F_{v;Ed} / F_{v;Rd}$ = **1,37** **> 1 !!**

8 - Check bearing stress boltconnection:

$UC_8 = F_{b;Ed} / F_{b;Rd}$ = **0,67** **< 1**

Remarks:

The maximum increase of stress or totalstress is(*2) : $U.C_{max}$ = **1,37** = **137%**

(*1) Eventually, with the checks of the stresses, the cross-section reduction method is used according to prEN 1993-1-5.

(*2) The total stress or increase of stress has been related to the permissible stress.

Revision :	0	A	B	C	D	E	F
Date :	5-feb-2014						
Name :	M. Glegola						
Checked :	J. Hollaar						

Referentienr :	13039140509	**Berekening :**	B.14008
Project	: 150 kV lijn Leiden - Zoetermeer		
Part	: mast 52		

D&C ENGINEERING

Check equal leg angle-members according to Eurocode 3, prEN 1993-1-1 : 2003

File prEN 1993-1-1.revB.xls d.d. 2-32012, JG

Check section: *Vak3 - randen* *verzwaard*

Memberforces : **(Attention! pressure = "-" and tension ="+")**

Compression:	N_{Sd}	=	-744,9	kN	***Combined forces diagonal:***			
Tension:	N_{Sd}	=	574,4	kN	$N_{comb1;c;s;d}$ (min. Compr. or tension)	=	0	kN
	$F_{perpend.;s;d}$	=	0	kN	$N_{comb2;c;s;d}$ (max. compression)	=	0	kN

Angle profile : *H140/140/13* (*1)

h	=	140	mm	I_y	=	6385392	mm^4
b	=	140	mm	$W_{y;el;eff.1}$	=	63366	mm^3
t_f	=	13	mm	$W_{y;el;eff.2}$	=	162768	mm^3
y_s	=	39,2	mm	i_y	=	42,7	mm
A_{bruto}	=	3495	mm^2	i_v	=	27,2	mm

Material :

Mat. qual. Fe360 / Fe510	=	Fe360		Permissible stress $f_{y;d}$	=	235,0	N/mm^2

Geometry section and bolts:

$L_{y;cr}$	=	884	mm	No. bolts / end / flange	=	4	**(Per flange !)**
$L_{v;cr}$	=	884	mm	Type of bolts M / "	=	24	
$L_{tot\ (with\ comb.\ buckling)}$	=	0	mm	End distance bolt e1	=	40	mm
$a^*L_{tot\ (with\ comb.\ buckling)}$	=	0	mm	Centre-centre spacing bolt s1	=	75	mm
$L_{perpendicular\ force}$	=	0	mm	Edge distance bolt e2	=	40	mm
Position perpendicular force	=	1	(⌉=1, ⌋=2)	Boltquality 4.6/5.6/8.8/10.9	=	8,8	
Column profile?	=	2	no=1, yes=2	Rolled screw threads	=	1	
Thickness tie plate	=	14	mm	Dubble strap joint no=1, yes=2	=	1	

Summary checks :

1 - Check tension on member :

$UC_1 = N_{Ed} / N_{t.Rd}$ = **0,79** **< 1**

2 - Check perpendicular force on member :

$UC_2 = M_{Ed} / M_{c.Rd}$ = **n.v.t.** **< 1**

3 - Check of the member slenderness :

$UC_3 = C_{max;buc} / C_{perm}$ = **33** **< 120**

4 - Check stress in member due to compression without excentricity:

$UC_4 = N_{E;d} / (C_{max;buc} \times N_{b;Rd})$ = **0,96** **< 1**

5 - Check stress in member due to compression with excentricity:

$UC_{5-1} = N_{E;d} / (C_{max;buc} \times N_{b;Rd})$ = **n.v.t.** **< 1**

$UC_{5-2} = N_{E;d} / N_{b;Rd} + k_{yy} \times (M_{y;Ed} + DM_{y;Ed}) / (C_{LT} \times M_{y;Rk})$ = **n.v.t.** **< 1**

6 - Check stress with combined buckling of two sections:

$UC_{5-1} = N_{E;d} / (C_{max;buc} \times N_{b;Rd})$ = **n.v.t.** **< 1**

$UC_{5-2} = N_{E;d} / N_{b;Rd} + k_{yy} \times (M_{y;Ed} + DM_{y;Ed}) / (C_{LT} \times M_{y;Rk})$ = **n.v.t.** **< 1**

7 - Check shear stress boltconnection:

$UC_7 = F_{v;Ed} / F_{v;Rd}$ = **0,69** **< 1**

8 - Check bearing stress boltconnection:

$UC_8 = F_{b;Ed} / F_{b;Rd}$ = **0,67** **< 1**

Remarks:

The maximum increase of stress or totalstress is(*2) : **$U.C_{max}$ = 0,96 = 96%**

(*1) Eventually, with the checks of the stresses, the cross-section reduction method is used according to prEN 1993-1-5.

(*2) The total stress or increase of stress has been related to the permissible stress.

Revision :	0	A	B	C	D	E	F
Date :	5-feb-2014						
Name :	M. Glegola						
Checked :	J. Hollaar						

Referentienr :	13039140509	**Berekening :**	B.14008
Project	: 150 kV lijn Leiden - Zoetermeer		
Part	: mast 52		

D&C ENGINEERING

Check equal leg angle-members according to Eurocode 3, prEN 1993-1-1 : 2003

File prEN 1993-1-1.revB.xls d.d. 2-32012, JG

Check section: *Vak 3* *diagonalen*

Memberforces : **(Attention! pressure = "-" and tension ="+")**

Compression:	N_{Sd}	=	*-67,8*	kN	***Combined forces diagonal:***			
Tension:	N_{Sd}	=	*60,7*	kN	$N_{comb1;c;s;d}$ (min. Compr. or tension)	=	*0*	kN
	$F_{perpend.;s;d}$	=	*0*	kN	$N_{comb2;c;s;d}$ (max. compression)	=	*0*	kN

Angle profile : *H100/75/7* (*1)

h	=	*100*	mm	I_y	=	*1179878*	mm^4
b	=	*75*	mm	$W_{y;el;eff.1}$	=	*14444*	mm^3
t_f	=	*7*	mm	$W_{y;el;eff.2}$	=	*64418*	mm^3
y_s	=	*18,3*	mm	i_y	=	*31,5*	mm
A_{bruto}	=	*1187*	mm^2	i_v	=	*15,9*	mm

Material :

Mat. qual. Fe360 / Fe510	=	*Fe360*		Permissible stress $f_{y;d}$	=	*235,0*	N/mm^2

Geometry section and bolts:

$L_{y;cr}$	=	*5028*	mm	No. bolts / end / flange	=	*1*	
$L_{v;cr}$	=	*2514*	mm	Type of bolts M / "	=	*24*	
$L_{tot\ (with\ comb.\ buckling)}$	=	*0*	mm	End distance bolt e1	=	*45*	mm
$a*L_{tot\ (with\ comb.\ buckling)}$	=	*0*	mm	Centre-centre spacing bolt s1	=	*70*	mm
$L_{perpendicular\ force}$	=	*0*	mm	Edge distance bolt e2	=	*35*	mm
Position perpendicular force	=	*1*	(⌉=1, ⌋=2)	Boltquality 4.6/5.6/8.8/10.9	=	*4,6*	
Column profile?	=	*1*	no=1, yes=2	Rolled screw threads	=	*1*	
Thickness tie plate	=	*7*	mm	Dubble strap joint no=1, yes=2	=	*1*	

Summary checks :

1 - Check tension on member :

$UC_1 = N_{Ed} / N_{t.Rd}$ = **0,68** **< 1**

2 - Check perpendicular force on member :

$UC_2 = M_{Ed} / M_{c.Rd}$ = **n.v.t.** **< 1**

3 - Check of the member slenderness :

$UC_3 = C_{max;buc} / C_{perm}$ = **159** **< 200 or 240**

4 - Check stress in member due to compression without excentricity:

$UC_4 = N_{E;d} / (C_{max;buc} \times N_{b;Rd})$ = **n.v.t.** **< 1**

5 - Check stress in member due to compression with excentricity:

$UC_{5-1} = N_{E;d} / (C_{max;buc} \times N_{b;Rd})$ = **0,87** **< 1**

$UC_{5-2} = N_{E;d} / N_{b;Rd} + k_{yy} \times (M_{y;Ed} + DM_{y;Ed}) / (C_{LT} \times M_{y;Rk})$ = **1,23** **> 1 !!**

6 - Check stress with combined buckling of two sections:

$UC_{5-1} = N_{E;d} / (C_{max;buc} \times N_{b;Rd})$ = **n.v.t.** **< 1**

$UC_{5-2} = N_{E;d} / N_{b;Rd} + k_{yy} \times (M_{y;Ed} + DM_{y;Ed}) / (C_{LT} \times M_{y;Rk})$ = **n.v.t.** **< 1**

7 - Check shear stress boltconnection:

$UC_7 = F_{v;Ed} / F_{v;Rd}$ = **1,00** **< 1**

8 - Check bearing stress boltconnection:

$UC_8 = F_{b;Ed} / F_{b;Rd}$ = **1,05** **> 1 !!**

Remarks:

The maximum increase of stress or totalstress is(*2) : $U.C_{max}$ = **1,23** = **123%**

(*1) Eventually, with the checks of the stresses, the cross-section reduction method is used according to prEN 1993-1-5.

(*2) The total stress or increase of stress has been related to the permissible stress.

Revision :	0	A	B	C	D	E	F
Date :	5-feb-2014						
Name :	M. Glegola						
Checked :	J. Hollaar						

Referentienr :	13039140509	**Berekening :**	B.14008
Project	: 150 kV lijn Leiden - Zoetermeer		
Part	: mast 52		

D&C ENGINEERING

Check equal leg angle-members according to Eurocode 3, prEN 1993-1-1 : 2003

File prEN 1993-1-1.revB.xls d.d. 2-32012, JG

Check section: *Vak 3 - diagonalen* verzwaard

Memberforces : **(Attention! pressure = "-" and tension ="+")**

Compression:	N_{Sd}	=	-67,8	kN	***Combined forces diagonal:***			
Tension:	N_{Sd}	=	60,7	kN	$N_{comb1;c;s;d}$ (min. Compr. or tension)	=	0	kN
	$F_{perpend.;s;d}$	=	0	kN	$N_{comb2;c;s;d}$ (max. compression)	=	0	kN

Angle profile : H100/100/10 (*1)

h	=	100	mm	I_y	=	1766764	mm^4
b	=	100	mm	$W_{y;el;eff.1}$	=	24615	mm^3
t_f	=	10	mm	$W_{y;el;eff.2}$	=	62597	mm^3
y_s	=	28,2	mm	i_y	=	30,4	mm
A_{bruto}	=	1915	mm^2	i_v	=	19,3	mm

Material :

Mat. qual. Fe360 / Fe510	=	Fe360		Permissible stress $f_{y;d}$	=	235,0	N/mm^2

Geometry section and bolts:

$L_{y;cr}$	=	5028	mm	No. bolts / end / flange	=	1	
$L_{v;cr}$	=	2514	mm	Type of bolts M / "	=	24	
$L_{tot\ (with\ comb.\ buckling)}$	=	0	mm	End distance bolt e1	=	45	mm
$a^*L_{tot\ (with\ comb.\ buckling)}$	=	0	mm	Centre-centre spacing bolt s1	=	70	mm
$L_{perpendicular\ force}$	=	0	mm	Edge distance bolt e2	=	35	mm
Position perpendicular force	=	1	(⌉=1, ⌋=2)	Boltquality 4.6/5.6/8.8/10.9	=	8,8	
Column profile?	=	1	no=1, yes=2	Rolled screw threads	=	1	
Thickness tie plate	=	8	mm	Dubble strap joint no=1, yes=2	=	1	

Summary checks :

1 - Check tension on member :

$UC_1 = N_{Ed} / N_{t.Rd}$ = **0,48** **< 1**

2 - Check perpendicular force on member :

$UC_2 = M_{Ed} / M_{c.Rd}$ = **n.v.t.** **< 1**

3 - Check of the member slenderness :

$UC_3 = C_{max;buc} / C_{perm}$ = **166** **< 200 or 240**

4 - Check stress in member due to compression without excentricity:

$UC_4 = N_{E;d} / (C_{max;buc} \times N_{b;Rd})$ = **n.v.t.** **< 1**

5 - Check stress in member due to compression with excentricity:

$UC_{5-1} = N_{E;d} / (C_{max;buc} \times N_{b;Rd})$ = **0,58** **< 1**

$UC_{5-2} = N_{E;d} / N_{b;Rd} + k_{yy} \times (M_{y;Ed} + DM_{y;Ed}) / (C_{LT} \times M_{y;Rk})$ = **0,89** **< 1**

6 - Check stress with combined buckling of two sections:

$UC_{5-1} = N_{E;d} / (C_{max;buc} \times N_{b;Rd})$ = **n.v.t.** **< 1**

$UC_{5-2} = N_{E;d} / N_{b;Rd} + k_{yy} \times (M_{y;Ed} + DM_{y;Ed}) / (C_{LT} \times M_{y;Rk})$ = **n.v.t.** **< 1**

7 - Check shear stress boltconnection:

$UC_7 = F_{v;Ed} / F_{v;Rd}$ = **0,50** **< 1**

8 - Check bearing stress boltconnection:

$UC_8 = F_{b;Ed} / F_{b;Rd}$ = **0,92** **< 1**

Remarks:

The maximum increase of stress or totalstress is(*2) : **$U.C_{max}$ = 0,92 = 92%**

(*1) Eventually, with the checks of the stresses, the cross-section reduction method is used according to prEN 1993-1-5.

(*2) The total stress or increase of stress has been related to the permissible stress.

Revision :	0	A	B	C	D	E	F
Date :	5-feb-2014						
Name :	M. Glegola						
Checked :	J. Hollaar						

Referentienr :	13039140509	**Berekening :**	B.14008
Project	: 150 kV lijn Leiden - Zoetermeer		
Part	: mast 52		

D&C ENGINEERING

Check equal leg angle-members according to Eurocode 3, prEN 1993-1-1 : 2003

File prEN 1993-1-1.revB.xls d.d. 2-32012, JG

Check section: *Vak 3* *horizontaal*

Memberforces : **(Attention! pressure = "-" and tension ="+")**

Compression:	N_{Sd}	=	-7,4	kN	***Combined forces diagonal:***			
Tension:	N_{Sd}	=	5,7	kN	$N_{comb1;c;s;d}$ (min. Compr. or tension)	=	0	kN
	$F_{perpend.;s;d}$	=	1,5	kN	$N_{comb2;c;s;d}$ (max. compression)	=	0	kN

Angle profile : *H70/70/6* (*1)

h	=	70	mm	I_y	=	368840	mm^4
b	=	70	mm	$W_{y;el;eff.1}$	=	7272	mm^3
t_f	=	6	mm	$W_{y;el;eff.2}$	=	19129	mm^3
y_s	=	19,3	mm	i_y	=	21,3	mm
A_{bruto}	=	813	mm^2	i_v	=	13,5	mm

Material :

Mat. qual. Fe360 / Fe510	=	Fe360		Permissible stress $f_{y;d}$	=	235,0	N/mm^2

Geometry section and bolts:

$L_{y;cr}$	=	3353	mm	No. bolts / end / flange	=	1	
$L_{v;cr}$	=	3353	mm	Type of bolts M / "	=	16	
$L_{tot\ (with\ comb.\ buckling)}$	=	0	mm	End distance bolt e1	=	25	mm
$a^*L_{tot\ (with\ comb.\ buckling)}$	=	0	mm	Centre-centre spacing bolt s1	=	70	mm
$L_{perpendicular\ force}$	=	3353	mm	Edge distance bolt e2	=	35	mm
Position perpendicular force	=	1	(⌉=1, ⌋=2)	Boltquality 4.6/5.6/8.8/10.9	=	4,6	
Column profile?	=	1	no=1, yes=2	Rolled screw threads	=	1	
Thickness tie plate	=	6	mm	Dubble strap joint no=1, yes=2	=	1	

Summary checks :

1 - Check tension on member :

$UC_1 = N_{Ed} / N_{t.Rd}$ = **0,06** **< 1**

2 - Check perpendicular force on member :

$UC_2 = M_{Ed} / M_{c.Rd}$ = **0,74** **< 1**

3 - Check of the member slenderness :

$UC_3 = C_{max;buc} / C_{perm}$ = **248** **< 200 or 240**

4 - Check stress in member due to compression without excentricity:

$UC_4 = N_{E;d} / (C_{max;buc} \times N_{b;Rd})$ = **n.v.t.** **< 1**

5 - Check stress in member due to compression with excentricity:

$UC_{5-1} = N_{E;d} / (C_{max;buc} \times N_{b;Rd})$ = **0,31** **< 1**

$UC_{5-2} = N_{E;d} / N_{b;Rd} + k_{yy} \times (M_{y;Ed} + DM_{y;Ed}) / (C_{LT} \times M_{y;Rk})$ = **0,38** **< 1**

6 - Check stress with combined buckling of two sections:

$UC_{5-1} = N_{E;d} / (C_{max;buc} \times N_{b;Rd})$ = **n.v.t.** **< 1**

$UC_{5-2} = N_{E;d} / N_{b;Rd} + k_{yy} \times (M_{y;Ed} + DM_{y;Ed}) / (C_{LT} \times M_{y;Rk})$ = **n.v.t.** **< 1**

7 - Check shear stress boltconnection:

$UC_7 = F_{v;Ed} / F_{v;Rd}$ = **0,25** **< 1**

8 - Check bearing stress boltconnection:

$UC_8 = F_{b;Ed} / F_{b;Rd}$ = **0,18** **< 1**

Remarks:

The maximum increase of stress or totalstress is(*2) : **$U.C_{max}$ = 0,74 = 74%**

(*1) Eventually, with the checks of the stresses, the cross-section reduction method is used according to prEN 1993-1-5.

(*2) The total stress or increase of stress has been related to the permissible stress.

Revision :	0	A	B	C	D	E	F
Date :	5-feb-2014						
Name :	M. Glegola						
Checked :	J. Hollaar						

Referentienr :	13039140509	**Berekening :**	B.14008
Project	: 150 kV lijn Leiden - Zoetermeer		
Part	: mast 52		

D&C ENGINEERING

Check equal leg angle-members according to Eurocode 3, prEN 1993-1-1 : 2003

File prEN 1993-1-1.revB.xls d.d. 2-32012, JG

Check section: *Vak 3* *hor. knikverkorters*

Memberforces : **(Attention! pressure = "-" and tension ="+")**

Compression:	N_{Sd}	=	-7,5	kN	***Combined forces diagonal:***			
Tension:	N_{Sd}	=	7,5	kN	$N_{comb1;c;s;d}$ (min. Compr. or tension)	=	0	kN
	$F_{perpend.;s;d}$	=	1,5	kN	$N_{comb2;c;s;d}$ (max. compression)	=	0	kN

Angle profile : *H50/40/5* (*1)

h	=	50	mm	I_y	=	103800	mm^4
b	=	40	mm	$W_{y;el;eff.1}$	=	2638	mm^3
t_f	=	5	mm	$W_{y;el;eff.2}$	=	9746	mm^3
y_s	=	10,7	mm	i_y	=	15,6	mm
A_{bruto}	=	427	mm^2	i_v	=	8,4	mm

Material :

Mat. qual. Fe360 / Fe510	=	Fe360		Permissible stress $f_{y;d}$	=	235,0	N/mm^2

Geometry section and bolts:

$L_{y;cr}$	=	1676	mm	No. bolts / end / flange	=	1	
$L_{v;cr}$	=	1676	mm	Type of bolts M / "	=	16	
$L_{tot\ (with\ comb.\ buckling)}$	=	0	mm	End distance bolt e1	=	25	mm
$a*L_{tot\ (with\ comb.\ buckling)}$	=	0	mm	Centre-centre spacing bolt s1	=	70	mm
$L_{perpendicular\ force}$	=	1676	mm	Edge distance bolt e2	=	35	mm
Position perpendicular force	=	1	(⌉=1, ⌋=2)	Boltquality 4.6/5.6/8.8/10.9	=	4,6	
Column profile?	=	1	no=1, yes=2	Rolled screw threads	=	1	
Thickness tie plate	=	7	mm	Dubble strap joint no=1, yes=2	=	1	

Summary checks :

1 - Check tension on member :

$UC_1 = N_{Ed} / N_{t.Rd}$ = **0,10** **< 1**

2 - Check perpendicular force on member :

$UC_2 = M_{Ed} / M_{c.Rd}$ = **1,01** **> 1 !!**

3 - Check of the member slenderness :

$UC_3 = C_{max;buc} / C_{perm}$ = **199** **< 200 or 240**

4 - Check stress in member due to compression without excentricity:

$UC_4 = N_{E;d} / (C_{max;buc} \times N_{b;Rd})$ = **n.v.t.** **< 1**

5 - Check stress in member due to compression with excentricity:

$UC_{5-1} = N_{E;d} / (C_{max;buc} \times N_{b;Rd})$ = **0,40** **< 1**

$UC_{5-2} = N_{E;d} / N_{b;Rd} + k_{yy} \times (M_{y;Ed} + DM_{y;Ed}) / (C_{LT} \times M_{y;Rk})$ = **0,48** **< 1**

6 - Check stress with combined buckling of two sections:

$UC_{5-1} = N_{E;d} / (C_{max;buc} \times N_{b;Rd})$ = **n.v.t.** **< 1**

$UC_{5-2} = N_{E;d} / N_{b;Rd} + k_{yy} \times (M_{y;Ed} + DM_{y;Ed}) / (C_{LT} \times M_{y;Rk})$ = **n.v.t.** **< 1**

7 - Check shear stress boltconnection:

$UC_7 = F_{v;Ed} / F_{v;Rd}$ = **0,25** **< 1**

8 - Check bearing stress boltconnection:

$UC_8 = F_{b;Ed} / F_{b;Rd}$ = **0,28** **< 1**

Remarks:

The maximum increase of stress or totalstress is(*2) : **$U.C_{max}$ = 1,01 = 101%**

(*1) Eventually, with the checks of the stresses, the cross-section reduction method is used according to prEN 1993-1-5.

(*2) The total stress or increase of stress has been related to the permissible stress.

Revision :	0	A	B	C	D	E	F
Date :	5-feb-2014						
Name :	M. Glegola						
Checked :	J. Hollaar						

Referentienr :	13039140509	**Berekening :**	B.14008
Project	: 150 kV lijn Leiden - Zoetermeer		
Part	: mast 52		

D&C ENGINEERING

Check equal leg angle-members according to Eurocode 3, prEN 1993-1-1 : 2003

File prEN 1993-1-1.revB.xls d.d. 2-32012, JG

Check section: *Vak 3* *hor. knikverkorters*

Memberforces : **(Attention! pressure = "-" and tension ="+")**

Compression:	N_{Sd}	=	-7,4	kN	***Combined forces diagonal:***			
Tension:	N_{Sd}	=	7,4	kN	$N_{comb1;c;s;d}$ (min. Compr. or tension)	=	0	kN
	$F_{perpend.;s;d}$	=	1,5	kN	$N_{comb2;c;s;d}$ (max. compression)	=	0	kN

Angle profile : H50/50/5 (*1)

h	=	50	mm	I_y	=	109643	mm^4
b	=	50	mm	$W_{y;el;eff.1}$	=	3049	mm^3
t_f	=	5	mm	$W_{y;el;eff.2}$	=	7811	mm^3
y_s	=	14,0	mm	i_y	=	15,1	mm
A_{bruto}	=	480	mm^2	i_v	=	9,6	mm

Material :

Mat. qual. Fe360 / Fe510	=	Fe360		Permissible stress $f_{y;d}$	=	235,0	N/mm^2

Geometry section and bolts:

$L_{y;cr}$	=	1676	mm	No. bolts / end / flange		=	1	
$L_{v;cr}$	=	1676	mm	Type of bolts	M / "	=	16	
$L_{tot\ (with\ comb.\ buckling)}$	=	0	mm	End distance bolt	e1	=	25	mm
$a*L_{tot\ (with\ comb.\ buckling)}$	=	0	mm	Centre-centre spacing bolt	s1	=	70	mm
$L_{perpendicular\ force}$	=	1676	mm	Edge distance bolt	e2	=	35	mm
Position perpendicular force	=	1	(⌉=1, ⌋=2)	Boltquality	4.6/5.6/8.8/10.9	=	8,8	
Column profile?	=	1	no=1, yes=2	Rolled screw threads		=	1	
Thickness tie plate	=	7	mm	Dubble strap joint no=1, yes=2		=	1	

Summary checks :

1 - Check tension on member :

$UC_1 = N_{Ed} / N_{t.Rd}$ = 0,10 < 1

2 - Check perpendicular force on member :

$UC_2 = M_{Ed} / M_{c.Rd}$ = 0,88 < 1

3 - Check of the member slenderness :

$UC_3 = C_{max;buc} / C_{perm}$ = 174 < 200 or 240

4 - Check stress in member due to compression without excentricity:

$UC_4 = N_{E;d} / (C_{max;buc} \times N_{b;Rd})$ = n.v.t. < 1

5 - Check stress in member due to compression with excentricity:

$UC_{5-1} = N_{E;d} / (C_{max;buc} \times N_{b;Rd})$ = 0,28 < 1

$UC_{5-2} = N_{E;d} / N_{b;Rd} + k_{yy} \times (M_{y;Ed} + DM_{y;Ed}) / (C_{LT} \times M_{y;Rk})$ = 0,38 < 1

6 - Check stress with combined buckling of two sections:

$UC_{5-1} = N_{E;d} / (C_{max;buc} \times N_{b;Rd})$ = n.v.t. < 1

$UC_{5-2} = N_{E;d} / N_{b;Rd} + k_{yy} \times (M_{y;Ed} + DM_{y;Ed}) / (C_{LT} \times M_{y;Rk})$ = n.v.t. < 1

7 - Check shear stress boltconnection:

$UC_7 = F_{v;Ed} / F_{v;Rd}$ = 0,12 < 1

8 - Check bearing stress boltconnection:

$UC_8 = F_{b;Ed} / F_{b;Rd}$ = 0,28 < 1

Remarks:

The maximum increase of stress or totalstress is(*2) : **$U.C_{max}$ = 0,88 = 88%**

(*1) Eventually, with the checks of the stresses, the cross-section reduction method is used according to prEN 1993-1-5.

(*2) The total stress or increase of stress has been related to the permissible stress.

Revision :	0	A	B	C	D	E	F
Date :	5-feb-2014						
Name :	M. Glegola						
Checked :	J. Hollaar						

Referentienr :	13039140509	**Berekening :**	B.14008
Project	: 150 kV lijn Leiden - Zoetermeer		
Part	: mast 52		

D&C ENGINEERING

Check equal leg angle-members according to Eurocode 3, prEN 1993-1-1 : 2003

File prEN 1993-1-1.revB.xls d.d. 2-32012, JG

Check section: *Vak 3 - schuine knikverkorters*

Memberforces : **(Attention! pressure = "-" and tension ="+")**

Compression:	N_{Sd}	=	*-10,5*	kN	***Combined forces diagonal:***			
Tension:	N_{Sd}	=	*10,5*	kN	$N_{comb1;c;s;d}$ (min. Compr. or tension)	=	*0*	kN
	$F_{perpend.;s;d}$	=	*0*	kN	$N_{comb2;c;s;d}$ (max. compression)	=	*0*	kN

Angle profile : *H50/40/5* (*1)

h	=	*50*	mm	I_y	=	*103800*	mm^4
b	=	*40*	mm	$W_{y;el;eff.1}$	=	*2638*	mm^3
t_f	=	*5*	mm	$W_{y;el;eff.2}$	=	*9746*	mm^3
y_s	=	*10,7*	mm	i_y	=	*15,6*	mm
A_{bruto}	=	*427*	mm^2	i_v	=	*8,4*	mm

Material :

Mat. qual. Fe360 / Fe510	=	*Fe360*		Permissible stress $f_{y;d}$	=	*235,0*	N/mm^2

Geometry section and bolts:

$L_{y;cr}$	=	*2356*	mm	No. bolts / end / flange	=	*1*	
$L_{v;cr}$	=	*2356*	mm	Type of bolts M / "	=	*16*	
$L_{tot\ (with\ comb.\ buckling)}$	=	*0*	mm	End distance bolt e1	=	*25*	mm
$a*L_{tot\ (with\ comb.\ buckling)}$	=	*0*	mm	Centre-centre spacing bolt s1	=	*70*	mm
$L_{perpendicular\ force}$	=	*0*	mm	Edge distance bolt e2	=	*35*	mm
Position perpendicular force	=	*1*	(⌉=1, ⌋=2)	Boltquality 4.6/5.6/8.8/10.9	=	*4,6*	
Column profile?	=	*1*	no=1, yes=2	Rolled screw threads	=	*1*	
Thickness tie plate	=	*7*	mm	Dubble strap joint no=1, yes=2	=	*1*	

Summary checks :

1 - Check tension on member :

$UC_1 = N_{Ed} / N_{t.Rd}$ = **0,14** **< 1**

2 - Check perpendicular force on member :

$UC_2 = M_{Ed} / M_{c.Rd}$ = **n.v.t.** **< 1**

3 - Check of the member slenderness :

$UC_3 = C_{max;buc} / C_{perm}$ = **280** **< 200 or 240**

4 - Check stress in member due to compression without excentricity:

$UC_4 = N_{E;d} / (C_{max;buc} \times N_{b;Rd})$ = **n.v.t.** **< 1**

5 - Check stress in member due to compression with excentricity:

$UC_{5-1} = N_{E;d} / (C_{max;buc} \times N_{b;Rd})$ = **1,05** **> 1 !!**

$UC_{5-2} = N_{E;d} / N_{b;Rd} + k_{yy} \times (M_{y;Ed} + DM_{y;Ed}) / (C_{LT} \times M_{y;Rk})$ = **1,17** **> 1 !!**

6 - Check stress with combined buckling of two sections:

$UC_{5-1} = N_{E;d} / (C_{max;buc} \times N_{b;Rd})$ = **n.v.t.** **< 1**

$UC_{5-2} = N_{E;d} / N_{b;Rd} + k_{yy} \times (M_{y;Ed} + DM_{y;Ed}) / (C_{LT} \times M_{y;Rk})$ = **n.v.t.** **< 1**

7 - Check shear stress boltconnection:

$UC_7 = F_{v;Ed} / F_{v;Rd}$ = **0,35** **< 1**

8 - Check bearing stress boltconnection:

$UC_8 = F_{b;Ed} / F_{b;Rd}$ = **0,39** **< 1**

Remarks:

The maximum increase of stress or totalstress is(*2) : **$U.C_{max}$ = 1,17 = 117%**

(*1) Eventually, with the checks of the stresses, the cross-section reduction method is used according to prEN 1993-1-5.

(*2) The total stress or increase of stress has been related to the permissible stress.

Revision :	0	A	B	C	D	E	F
Date :	5-feb-2014						
Name :	M. Glegola						
Checked :	J. Hollaar						

Referentienr :	13039140509	**Berekening :**	B.14008
Project	: 150 kV lijn Leiden - Zoetermeer		
Part	: mast 52		

D&C ENGINEERING

Check equal leg angle-members according to Eurocode 3, prEN 1993-1-1 : 2003

File prEN 1993-1-1.revB.xls d.d. 2-32012, JG

Check section: *Vak 3 - schuine knikverkorters* **verzwaard**

Memberforces : **(Attention! pressure = "-" and tension ="+")**

Compression:	N_{Sd}	=	-10,52	kN	***Combined forces diagonal:***			
Tension:	N_{Sd}	=	10,52	kN	$N_{comb1;c;s;d}$ (min. Compr. or tension)	=	0	kN
	$F_{perpend.;s;d}$	=	0	kN	$N_{comb2;c;s;d}$ (max. compression)	=	0	kN

Angle profile : *H50/40/5* (*1)

h	=	50	mm	I_y	=	103800	mm^4
b	=	40	mm	$W_{y;el;eff.1}$	=	2638	mm^3
t_f	=	5	mm	$W_{y;el;eff.2}$	=	9746	mm^3
y_s	=	10,7	mm	i_y	=	15,6	mm
A_{bruto}	=	427	mm^2	i_v	=	8,4	mm

Material :

Mat. qual. Fe360 / Fe510	=	Fe360		Permissible stress $f_{y;d}$	=	235,0	N/mm^2

Geometry section and bolts:

$L_{y;cr}$	=	2356	mm	No. bolts / end / flange	=	1	
$L_{v;cr}$	=	1178	mm	Type of bolts M / "	=	16	
$L_{tot\ (with\ comb.\ buckling)}$	=	0	mm	End distance bolt e1	=	25	mm
$a^*L_{tot\ (with\ comb.\ buckling)}$	=	0	mm	Centre-centre spacing bolt s1	=	70	mm
$L_{perpendicular\ force}$	=	0	mm	Edge distance bolt e2	=	35	mm
Position perpendicular force	=	1	(⌉=1, ⌋=2)	Boltquality 4.6/5.6/8.8/10.9	=	4,6	
Column profile?	=	1	no=1, yes=2	Rolled screw threads	=	1	
Thickness tie plate	=	7	mm	Dubble strap joint no=1, yes=2	=	1	

Summary checks :

1 - Check tension on member :

$UC_1 = N_{Ed} / N_{t.Rd}$ = **0,14** **< 1**

2 - Check perpendicular force on member :

$UC_2 = M_{Ed} / M_{c.Rd}$ = **n.v.t.** **< 1**

3 - Check of the member slenderness :

$UC_3 = C_{max;buc} / C_{perm}$ = **151** **< 200 or 240**

4 - Check stress in member due to compression without excentricity:

$UC_4 = N_{E;d} / (C_{max;buc} \times N_{b;Rd})$ = **n.v.t.** **< 1**

5 - Check stress in member due to compression with excentricity:

$UC_{5-1} = N_{E;d} / (C_{max;buc} \times N_{b;Rd})$ = **0,34** **< 1**

$UC_{5-2} = N_{E;d} / N_{b;Rd} + k_{yy} \times (M_{y;Ed} + DM_{y;Ed}) / (C_{LT} \times M_{y;Rk})$ = **0,47** **< 1**

6 - Check stress with combined buckling of two sections:

$UC_{5-1} = N_{E;d} / (C_{max;buc} \times N_{b;Rd})$ = **n.v.t.** **< 1**

$UC_{5-2} = N_{E;d} / N_{b;Rd} + k_{yy} \times (M_{y;Ed} + DM_{y;Ed}) / (C_{LT} \times M_{y;Rk})$ = **n.v.t.** **< 1**

7 - Check shear stress boltconnection:

$UC_7 = F_{v;Ed} / F_{v;Rd}$ = **0,35** **< 1**

8 - Check bearing stress boltconnection:

$UC_8 = F_{b;Ed} / F_{b;Rd}$ = **0,39** **< 1**

Remarks:

The maximum increase of stress or totalstress is(*2) : **$U.C_{max}$ = 0,47 = 47%**

(*1) Eventually, with the checks of the stresses, the cross-section reduction method is used according to prEN 1993-1-5.

(*2) The total stress or increase of stress has been related to the permissible stress.

Revision :	0	A	B	C	D	E	F
Date :	5-feb-2014						
Name :	M. Glegola						
Checked :	J. Hollaar						

Referentienr :	13039140509	**Berekening :**	B.14008
Project	: 150 kV lijn Leiden - Zoetermeer		
Part	: mast 52		

D&C ENGINEERING

Check equal leg angle-members according to Eurocode 3, prEN 1993-1-1 : 2003

File prEN 1993-1-1.revB.xls d.d. 2-32012, JG

Check section: *Vak 4* *randen*

Memberforces : **(Attention! pressure = "-" and tension ="+")**

Compression:	N_{Sd}	=	-590,2	kN	***Combined forces diagonal:***			
Tension:	N_{Sd}	=	423,4	kN	$N_{comb1;c;s;d}$ (min. Compr. or tension)	=	0	kN
	$F_{perpend.;s;d}$	=	0	kN	$N_{comb2;c;s;d}$ (max. compression)	=	0	kN

Angle profile : *H130/130/12* (*1)

h	=	130	mm	I_y	=	4721746	mm^4
b	=	130	mm	$W_{y;el;eff.1}$	=	50442	mm^3
t_f	=	12	mm	$W_{y;el;eff.2}$	=	129742	mm^3
y_s	=	36,4	mm	i_y	=	39,7	mm
A_{bruto}	=	2997	mm^2	i_v	=	25,2	mm

Material :

Mat. qual. Fe360 / Fe510	=	Fe360		Permissible stress $f_{y;d}$	=	235,0	N/mm^2

Geometry section and bolts:

$L_{y;cr}$	=	1784	mm	No. bolts / end / flange	=	4	**(Per flange !)**
$L_{v;cr}$	=	1784	mm	Type of bolts M / "	=	24	
$L_{tot\ (with\ comb.\ buckling)}$	=	0	mm	End distance bolt e1	=	40	mm
$a*L_{tot\ (with\ comb.\ buckling)}$	=	0	mm	Centre-centre spacing bolt s1	=	75	mm
$L_{perpendicular\ force}$	=	0	mm	Edge distance bolt e2	=	40	mm
Position perpendicular force	=	1	(⌉=1, ⌋=2)	Boltquality 4.6/5.6/8.8/10.9	=	4,6	
Column profile?	=	2	no=1, yes=2	Rolled screw threads	=	1	
Thickness tie plate	=	14	mm	Dubble strap joint no=1, yes=2	=	1	

Summary checks :

1 - Check tension on member :

$UC_1 = N_{Ed} / N_{t.Rd}$ = **0,69** **< 1**

2 - Check perpendicular force on member :

$UC_2 = M_{Ed} / M_{c.Rd}$ = **n.v.t.** **< 1**

3 - Check of the member slenderness :

$UC_3 = C_{max;buc} / C_{perm}$ = **71** **< 120**

4 - Check stress in member due to compression without excentricity:

$UC_4 = N_{E;d} / (C_{max;buc} \times N_{b;Rd})$ = **1,11** **> 1 !!**

5 - Check stress in member due to compression with excentricity:

$UC_{5-1} = N_{E;d} / (C_{max;buc} \times N_{b;Rd})$ = **n.v.t.** **< 1**

$UC_{5-2} = N_{E;d} / N_{b;Rd} + k_{yy} \times (M_{y;Ed} + DM_{y;Ed}) / (C_{LT} \times M_{y;Rk})$ = **n.v.t.** **< 1**

6 - Check stress with combined buckling of two sections:

$UC_{5-1} = N_{E;d} / (C_{max;buc} \times N_{b;Rd})$ = **n.v.t.** **< 1**

$UC_{5-2} = N_{E;d} / N_{b;Rd} + k_{yy} \times (M_{y;Ed} + DM_{y;Ed}) / (C_{LT} \times M_{y;Rk})$ = **n.v.t.** **< 1**

7 - Check shear stress boltconnection:

$UC_7 = F_{v;Ed} / F_{v;Rd}$ = **1,09** **> 1 !!**

8 - Check bearing stress boltconnection:

$UC_8 = F_{b;Ed} / F_{b;Rd}$ = **0,53** **< 1**

Remarks:

The maximum increase of stress or totalstress is(*2) : **$U.C_{max}$ = 1,11 = 111%**

(*1) Eventually, with the checks of the stresses, the cross-section reduction method is used according to prEN 1993-1-5.

(*2) The total stress or increase of stress has been related to the permissible stress.

Revision :	0	A	B	C	D	E	F
Date :	5-feb-2014						
Name :	M. Glegola						
Checked :	J. Hollaar						

Referentienr :	13039140509	**Berekening :**	B.14008
Project	: 150 kV lijn Leiden - Zoetermeer		
Part	: mast 52		

D&C ENGINEERING

Check equal leg angle-members according to Eurocode 3, prEN 1993-1-1 : 2003

File prEN 1993-1-1.revB.xls d.d. 2-32012, JG

Check section: *Vak 4 - randen*

verzwaard

Memberforces : **(Attention! pressure = "-" and tension ="+")**

Compression:	N_{Sd}	=	-590,2	kN	***Combined forces diagonal:***			
Tension:	N_{Sd}	=	423,4	kN	$N_{comb1;c;s;d}$ (min. Compr. or tension)	=	0	kN
	$F_{perpend.;s;d}$	=	0	kN	$N_{comb2;c;s;d}$ (max. compression)	=	0	kN

Angle profile : *H130/130/12* (*1)

h	=	130	mm	I_y	=	4721746	mm^4
b	=	130	mm	$W_{y;el;eff.1}$	=	50442	mm^3
t_f	=	12	mm	$W_{y;el;eff.2}$	=	129742	mm^3
y_s	=	36,4	mm	i_y	=	39,7	mm
A_{bruto}	=	2997	mm^2	i_v	=	25,2	mm

Material :

Mat. qual. Fe360 / Fe510	=	Fe360		Permissible stress $f_{y;d}$	=	235,0	N/mm^2

Geometry section and bolts:

$L_{y;cr}$	=	892	mm	No. bolts / end / flange	=	4	**(Per flange !)**
$L_{v;cr}$	=	892	mm	Type of bolts M / "	=	24	
$L_{tot\ (with\ comb.\ buckling)}$	=	0	mm	End distance bolt e1	=	40	mm
$a^*L_{tot\ (with\ comb.\ buckling)}$	=	0	mm	Centre-centre spacing bolt s1	=	75	mm
$L_{perpendicular\ force}$	=	0	mm	Edge distance bolt e2	=	40	mm
Position perpendicular force	=	1	(⌉=1, ⌋=2)	Boltquality 4.6/5.6/8.8/10.9	=	8,8	
Column profile?	=	2	no=1, yes=2	Rolled screw threads	=	1	
Thickness tie plate	=	14	mm	Dubble strap joint no=1, yes=2	=	1	

Summary checks :

1 - Check tension on member :

$UC_1 = N_{Ed} / N_{t.Rd}$ = **0,69** **< 1**

2 - Check perpendicular force on member :

$UC_2 = M_{Ed} / M_{c.Rd}$ = **n.v.t.** **< 1**

3 - Check of the member slenderness :

$UC_3 = C_{max;buc} / C_{perm}$ = **35** **< 120**

4 - Check stress in member due to compression without excentricity:

$UC_4 = N_{E;d} / (C_{max;buc} \times N_{b;Rd})$ = **0,90** **< 1**

5 - Check stress in member due to compression with excentricity:

$UC_{5-1} = N_{E;d} / (C_{max;buc} \times N_{b;Rd})$ = **n.v.t.** **< 1**

$UC_{5-2} = N_{E;d} / N_{b;Rd} + k_{yy} \times (M_{y;Ed} + DM_{y;Ed}) / (C_{LT} \times M_{y;Rk})$ = **n.v.t.** **< 1**

6 - Check stress with combined buckling of two sections:

$UC_{5-1} = N_{E;d} / (C_{max;buc} \times N_{b;Rd})$ = **n.v.t.** **< 1**

$UC_{5-2} = N_{E;d} / N_{b;Rd} + k_{yy} \times (M_{y;Ed} + DM_{y;Ed}) / (C_{LT} \times M_{y;Rk})$ = **n.v.t.** **< 1**

7 - Check shear stress boltconnection:

$UC_7 = F_{v;Ed} / F_{v;Rd}$ = **0,54** **< 1**

8 - Check bearing stress boltconnection:

$UC_8 = F_{b;Ed} / F_{b;Rd}$ = **0,53** **< 1**

Remarks:

The maximum increase of stress or totalstress is(*2) : **$U.C_{max}$ = 0,90 = 90%**

(*1) Eventually, with the checks of the stresses, the cross-section reduction method is used according to prEN 1993-1-5.

(*2) The total stress or increase of stress has been related to the permissible stress.

Revision :	0	A	B	C	D	E	F
Date :	5-feb-2014						
Name :	M. Glegola						
Checked :	J. Hollaar						

Referentienr :	13039140509	**Berekening :**	B.14008
Project	: 150 kV lijn Leiden - Zoetermeer		
Part	: mast 52		

D&C ENGINEERING

Check equal leg angle-members according to Eurocode 3, prEN 1993-1-1 : 2003

File prEN 1993-1-1.revB.xls d.d. 2-32012, JG

Check section: *Vak 4* *diagonalen*

Memberforces : **(Attention! pressure = "-" and tension ="+")**

Compression:	N_{Sd}	=	*-64,0*	kN	***Combined forces diagonal:***			
Tension:	N_{Sd}	=	*71,4*	kN	$N_{comb1;c;s;d}$ (min. Compr. or tension)	=	*0*	kN
	$F_{perpend.;s;d}$	=	*0*	kN	$N_{comb2;c;s;d}$ (max. compression)	=	*0*	kN

Angle profile : *H100/75/7* (*1)

h	=	*100*	mm	I_y	=	*1179878*	mm^4
b	=	*75*	mm	$W_{y;el;eff.1}$	=	*14444*	mm^3
t_f	=	*7*	mm	$W_{y;el;eff.2}$	=	*64418*	mm^3
y_s	=	*18,3*	mm	i_y	=	*31,5*	mm
A_{bruto}	=	*1187*	mm^2	i_v	=	*15,9*	mm

Material :

Mat. qual. Fe360 / Fe510	=	*Fe360*		Permissible stress $f_{y;d}$	=	*235,0*	N/mm^2

Geometry section and bolts:

$L_{y;cr}$	=	*4754*	mm	No. bolts / end / flange	=	*4*	
$L_{v;cr}$	=	*2377*	mm	Type of bolts M / "	=	*24*	
$L_{tot\ (with\ comb.\ buckling)}$	=	*0*	mm	End distance bolt e1	=	*45*	mm
$a*L_{tot\ (with\ comb.\ buckling)}$	=	*0*	mm	Centre-centre spacing bolt s1	=	*70*	mm
$L_{perpendicular\ force}$	=	*0*	mm	Edge distance bolt e2	=	*35*	mm
Position perpendicular force	=	*1*	(⌉=1, ⌋=2)	Boltquality 4.6/5.6/8.8/10.9	=	*8,8*	
Column profile?	=	*1*	no=1, yes=2	Rolled screw threads	=	*1*	
Thickness tie plate	=	*7*	mm	Dubble strap joint no=1, yes=2	=	*1*	

Summary checks :

1 - Check tension on member :

$UC_1 = N_{Ed} / N_{t.Rd}$ = **0,48** **< 1**

2 - Check perpendicular force on member :

$UC_2 = M_{Ed} / M_{c.Rd}$ = **n.v.t.** **< 1**

3 - Check of the member slenderness :

$UC_3 = C_{max;buc} / C_{perm}$ = **151** **< 200 or 240**

4 - Check stress in member due to compression without excentricity:

$UC_4 = N_{E;d} / (C_{max;buc} \times N_{b;Rd})$ = **0,75** **< 1**

5 - Check stress in member due to compression with excentricity:

$UC_{5-1} = N_{E;d} / (C_{max;buc} \times N_{b;Rd})$ = **n.v.t.** **< 1**

$UC_{5-2} = N_{E;d} / N_{b;Rd} + k_{yy} \times (M_{y;Ed} + DM_{y;Ed}) / (C_{LT} \times M_{y;Rk})$ = **n.v.t.** **< 1**

6 - Check stress with combined buckling of two sections:

$UC_{5-1} = N_{E;d} / (C_{max;buc} \times N_{b;Rd})$ = **n.v.t.** **< 1**

$UC_{5-2} = N_{E;d} / N_{b;Rd} + k_{yy} \times (M_{y;Ed} + DM_{y;Ed}) / (C_{LT} \times M_{y;Rk})$ = **n.v.t.** **< 1**

7 - Check shear stress boltconnection:

$UC_7 = F_{v;Ed} / F_{v;Rd}$ = **0,13** **< 1**

8 - Check bearing stress boltconnection:

$UC_8 = F_{b;Ed} / F_{b;Rd}$ = **0,31** **< 1**

Remarks:

The maximum increase of stress or totalstress is(*2) : **$U.C_{max}$ = 0,75 = 75%**

(*1) Eventually, with the checks of the stresses, the cross-section reduction method is used according to prEN 1993-1-5.

(*2) The total stress or increase of stress has been related to the permissible stress.

Revision :	0	A	B	C	D	E	F
Date :	5-feb-2014						
Name :	M. Glegola						
Checked :	J. Hollaar						

Referentienr :	13039140509	**Berekening :**	B.14008
Project	: 150 kV lijn Leiden - Zoetermeer		
Part	: mast 52		

D&C ENGINEERING

Check equal leg angle-members according to Eurocode 3, prEN 1993-1-1 : 2003

File prEN 1993-1-1.revB.xls d.d. 2-32012, JG

Check section: *Vak 4* *hor. knikverkorters*

Memberforces : **(Attention! pressure = "-" and tension ="+")**

Compression:	N_{Sd}	=	-4,5	kN	***Combined forces diagonal:***			
Tension:	N_{Sd}	=	4,5	kN	$N_{comb1;c;s;d}$ (min. Compr. or tension)	=	0	kN
	$F_{perpend.;s;d}$	=	1,5	kN	$N_{comb2;c;s;d}$ (max. compression)	=	0	kN

Angle profile : *H50/40/5* (*1)

h	=	50	mm	I_y	=	103800	mm^4
b	=	40	mm	$W_{y;el;eff.1}$	=	2638	mm^3
t_f	=	5	mm	$W_{y;el;eff.2}$	=	9746	mm^3
y_s	=	10,7	mm	i_y	=	15,6	mm
A_{bruto}	=	427	mm^2	i_v	=	8,4	mm

Material :

Mat. qual. Fe360 / Fe510	=	Fe360		Permissible stress $f_{y;d}$	=	235,0	N/mm^2

Geometry section and bolts:

$L_{y;cr}$	=	1460	mm	No. bolts / end / flange	=	1	
$L_{v;cr}$	=	1460	mm	Type of bolts M / "	=	16	
$L_{tot\ (with\ comb.\ buckling)}$	=	0	mm	End distance bolt e1	=	25	mm
$a^*L_{tot\ (with\ comb.\ buckling)}$	=	0	mm	Centre-centre spacing bolt s1	=	70	mm
$L_{perpendicular\ force}$	=	1460	mm	Edge distance bolt e2	=	35	mm
Position perpendicular force	=	1	(⌉=1, ⌋=2)	Boltquality 4.6/5.6/8.8/10.9	=	4,6	
Column profile?	=	1	no=1, yes=2	Rolled screw threads	=	1	
Thickness tie plate	=	7	mm	Dubble strap joint no=1, yes=2	=	1	

Summary checks :

1 - Check tension on member :

$UC_1 = N_{Ed} / N_{t.Rd}$ = **0,06** **< 1**

2 - Check perpendicular force on member :

$UC_2 = M_{Ed} / M_{c.Rd}$ = **0,88** **< 1**

3 - Check of the member slenderness :

$UC_3 = C_{max;buc} / C_{perm}$ = **174** **< 200 or 240**

4 - Check stress in member due to compression without excentricity:

$UC_4 = N_{E;d} / (C_{max;buc} \times N_{b;Rd})$ = **n.v.t.** **< 1**

5 - Check stress in member due to compression with excentricity:

$UC_{5-1} = N_{E;d} / (C_{max;buc} \times N_{b;Rd})$ = **0,19** **< 1**

$UC_{5-2} = N_{E;d} / N_{b;Rd} + k_{yy} \times (M_{y;Ed} + DM_{y;Ed}) / (C_{LT} \times M_{y;Rk})$ = **0,23** **< 1**

6 - Check stress with combined buckling of two sections:

$UC_{5-1} = N_{E;d} / (C_{max;buc} \times N_{b;Rd})$ = **n.v.t.** **< 1**

$UC_{5-2} = N_{E;d} / N_{b;Rd} + k_{yy} \times (M_{y;Ed} + DM_{y;Ed}) / (C_{LT} \times M_{y;Rk})$ = **n.v.t.** **< 1**

7 - Check shear stress boltconnection:

$UC_7 = F_{v;Ed} / F_{v;Rd}$ = **0,15** **< 1**

8 - Check bearing stress boltconnection:

$UC_8 = F_{b;Ed} / F_{b;Rd}$ = **0,17** **< 1**

Remarks:

The maximum increase of stress or totalstress is(*2) : **$U.C_{max}$ = 0,88 = 88%**

(*1) Eventually, with the checks of the stresses, the cross-section reduction method is used according to prEN 1993-1-5.

(*2) The total stress or increase of stress has been related to the permissible stress.

Revision :	0	A	B	C	D	E	F
Date :	5-feb-2014						
Name :	M. Glegola						
Checked :	J. Hollaar						

Referentienr :	13039140509	**Berekening :**	B.14008
Project	: 150 kV lijn Leiden - Zoetermeer		
Part	: mast 52		

D&C ENGINEERING

Check equal leg angle-members according to Eurocode 3, prEN 1993-1-1 : 2003

File prEN 1993-1-1.revB.xls d.d. 2-32012, JG

Check section: *Vak 4* *schuine knikverkorters*

Memberforces : **(Attention! pressure = "-" and tension ="+")**

Compression:	N_{Sd}	=	-6,8	kN	***Combined forces diagonal:***			
Tension:	N_{Sd}	=	6,8	kN	$N_{comb1;c;s;d}$ (min. Compr. or tension)	=	0	kN
	$F_{perpend.;s;d}$	=	1,5	kN	$N_{comb2;c;s;d}$ (max. compression)	=	0	kN

Angle profile : *H50/40/5* (*1)

h	=	50	mm	I_y	=	103800	mm^4
b	=	40	mm	$W_{y;el;eff.1}$	=	2638	mm^3
t_f	=	5	mm	$W_{y;el;eff.2}$	=	9746	mm^3
y_s	=	10,7	mm	i_y	=	15,6	mm
A_{bruto}	=	427	mm^2	i_v	=	8,4	mm

Material :

Mat. qual. Fe360 / Fe510	=	Fe360		Permissible stress $f_{y;d}$	=	235,0	N/mm^2

Geometry section and bolts:

$L_{y;cr}$	=	2231	mm	No. bolts / end / flange	=	1	
$L_{v;cr}$	=	2231	mm	Type of bolts M / "	=	16	
$L_{tot\ (with\ comb.\ buckling)}$	=	0	mm	End distance bolt e1	=	25	mm
$a^*L_{tot\ (with\ comb.\ buckling)}$	=	0	mm	Centre-centre spacing bolt s1	=	70	mm
$L_{perpendicular\ force}$	=	0	mm	Edge distance bolt e2	=	35	mm
Position perpendicular force	=	1	(⌉=1, ⌋=2)	Boltquality 4.6/5.6/8.8/10.9	=	4,6	
Column profile?	=	1	no=1, yes=2	Rolled screw threads	=	1	
Thickness tie plate	=	7	mm	Dubble strap joint no=1, yes=2	=	1	

Summary checks :

1 - Check tension on member :

$UC_1 = N_{Ed} / N_{t.Rd}$ = **0,09** **< 1**

2 - Check perpendicular force on member :

$UC_2 = M_{Ed} / M_{c.Rd}$ = **0,00** **< 1**

3 - Check of the member slenderness :

$UC_3 = C_{max;buc} / C_{perm}$ = **265** **< 200 or 240**

4 - Check stress in member due to compression without excentricity:

$UC_4 = N_{E;d} / (C_{max;buc} \times N_{b;Rd})$ = **n.v.t.** **< 1**

5 - Check stress in member due to compression with excentricity:

$UC_{5-1} = N_{E;d} / (C_{max;buc} \times N_{b;Rd})$ = **0,61** **< 1**

$UC_{5-2} = N_{E;d} / N_{b;Rd} + k_{yy} \times (M_{y;Ed} + DM_{y;Ed}) / (C_{LT} \times M_{y;Rk})$ = **0,70** **< 1**

6 - Check stress with combined buckling of two sections:

$UC_{5-1} = N_{E;d} / (C_{max;buc} \times N_{b;Rd})$ = **n.v.t.** **< 1**

$UC_{5-2} = N_{E;d} / N_{b;Rd} + k_{yy} \times (M_{y;Ed} + DM_{y;Ed}) / (C_{LT} \times M_{y;Rk})$ = **n.v.t.** **< 1**

7 - Check shear stress boltconnection:

$UC_7 = F_{v;Ed} / F_{v;Rd}$ = **0,23** **< 1**

8 - Check bearing stress boltconnection:

$UC_8 = F_{b;Ed} / F_{b;Rd}$ = **0,26** **< 1**

Remarks:

The maximum increase of stress or totalstress is(*2) : **$U.C_{max}$ = 0,70 = 70%**

(*1) Eventually, with the checks of the stresses, the cross-section reduction method is used according to prEN 1993-1-5.

(*2) The total stress or increase of stress has been related to the permissible stress.

Revision :	0	A	B	C	D	E	F
Date :	5-feb-2014						
Name :	M. Glegola						
Checked :	J. Hollaar						

Referentienr :	13039140509	**Berekening :**	B.14008
Project	: 150 kV lijn Leiden - Zoetermeer		
Part	: mast 52		

D&C ENGINEERING

Check equal leg angle-members according to Eurocode 3, prEN 1993-1-1 : 2003

File prEN 1993-1-1.revB.xls d.d. 2-32012, JG

Check section: *Vak 5* *randen*

Memberforces : **(Attention! pressure = "-" and tension ="+")**

Compression:	N_{Sd}	=	-458,2	kN	***Combined forces diagonal:***			
Tension:	N_{Sd}	=	310,8	kN	$N_{comb1;c;s;d}$ (min. Compr. or tension)	=	0	kN
	$F_{perpend.;s;d}$	=	0	kN	$N_{comb2;c;s;d}$ (max. compression)	=	0	kN

Angle profile : *H130/130/12* (*1)

h	=	130	mm	I_y	=	4721746	mm^4
b	=	130	mm	$W_{y;el;eff.1}$	=	50442	mm^3
t_f	=	12	mm	$W_{y;el;eff.2}$	=	129742	mm^3
y_s	=	36,4	mm	i_y	=	39,7	mm
A_{bruto}	=	2997	mm^2	i_v	=	25,2	mm

Material :

Mat. qual. Fe360 / Fe510	=	Fe360		Permissible stress $f_{y;d}$	=	235,0	N/mm^2

Geometry section and bolts:

$L_{y;cr}$	=	1707	mm	No. bolts / end / flange	=	3	**(Per flange !)**
$L_{v;cr}$	=	1707	mm	Type of bolts M / "	=	24	
$L_{tot\ (with\ comb.\ buckling)}$	=	0	mm	End distance bolt e1	=	40	mm
$a*L_{tot\ (with\ comb.\ buckling)}$	=	0	mm	Centre-centre spacing bolt s1	=	70	mm
$L_{perpendicular\ force}$	=	0	mm	Edge distance bolt e2	=	40	mm
Position perpendicular force	=	1	(⌉=1, ⌋=2)	Boltquality 4.6/5.6/8.8/10.9	=	4,6	
Column profile?	=	2	no=1, yes=2	Rolled screw threads	=	1	
Thickness tie plate	=	12	mm	Dubble strap joint no=1, yes=2	=	1	

Summary checks :

1 - Check tension on member :

$UC_1 = N_{Ed} / N_{t.Rd}$ = **0,51** **< 1**

2 - Check perpendicular force on member :

$UC_2 = M_{Ed} / M_{c.Rd}$ = **n.v.t.** **< 1**

3 - Check of the member slenderness :

$UC_3 = C_{max;buc} / C_{perm}$ = **68** **< 120**

4 - Check stress in member due to compression without excentricity:

$UC_4 = N_{E;d} / (C_{max;buc} \times N_{b;Rd})$ = **0,84** **< 1**

5 - Check stress in member due to compression with excentricity:

$UC_{5-1} = N_{E;d} / (C_{max;buc} \times N_{b;Rd})$ = **n.v.t.** **< 1**

$UC_{5-2} = N_{E;d} / N_{b;Rd} + k_{yy} \times (M_{y;Ed} + DM_{y;Ed}) / (C_{LT} \times M_{y;Rk})$ = **n.v.t.** **< 1**

6 - Check stress with combined buckling of two sections:

$UC_{5-1} = N_{E;d} / (C_{max;buc} \times N_{b;Rd})$ = **n.v.t.** **< 1**

$UC_{5-2} = N_{E;d} / N_{b;Rd} + k_{yy} \times (M_{y;Ed} + DM_{y;Ed}) / (C_{LT} \times M_{y;Rk})$ = **n.v.t.** **< 1**

7 - Check shear stress boltconnection:

$UC_7 = F_{v;Ed} / F_{v;Rd}$ = **1,13** **> 1 !!**

8 - Check bearing stress boltconnection:

$UC_8 = F_{b;Ed} / F_{b;Rd}$ = **0,69** **< 1**

Remarks:

The maximum increase of stress or totalstress is(*2) : **$U.C_{max}$ = 1,13 = 113%**

(*1) Eventually, with the checks of the stresses, the cross-section reduction method is used according to prEN 1993-1-5.

(*2) The total stress or increase of stress has been related to the permissible stress.

Revision :	0	A	B	C	D	E	F
Date :	5-feb-2014						
Name :	M. Glegola						
Checked :	J. Hollaar						

Referentienr :	13039140509	**Berekening :**	B.14008
Project	: 150 kV lijn Leiden - Zoetermeer		
Part	: mast 52		

D&C ENGINEERING

Check equal leg angle-members according to Eurocode 3, prEN 1993-1-1 : 2003

File prEN 1993-1-1.revB.xls d.d. 2-32012, JG

Check section: *Vak 5* *randen* *verzwaard*

Memberforces : **(Attention! pressure = "-" and tension ="+")**

Compression:	N_{Sd}	=	*-458,2*	kN	***Combined forces diagonal:***			
Tension:	N_{Sd}	=	*310,8*	kN	$N_{comb1;c;s;d}$ (min. Compr. or tension)	=	*0*	kN
	$F_{perpend.;s;d}$	=	*0*	kN	$N_{comb2;c;s;d}$ (max. compression)	=	*0*	kN

Angle profile : *H130/130/12* (*1)

h	=	*130*	mm	I_y	=	*4721746*	mm^4
b	=	*130*	mm	$W_{y;el;eff.1}$	=	*50442*	mm^3
t_f	=	*12*	mm	$W_{y;el;eff.2}$	=	*129742*	mm^3
y_s	=	*36,4*	mm	i_y	=	*39,7*	mm
A_{bruto}	=	*2997*	mm^2	i_v	=	*25,2*	mm

Material :

Mat. qual. Fe360 / Fe510	=	*Fe360*		Permissible stress $f_{y;d}$	=	*235,0*	N/mm^2

Geometry section and bolts:

$L_{y;cr}$	=	*1707*	mm	No. bolts / end / flange		=	*3*	**(Per flange !)**
$L_{v;cr}$	=	*1707*	mm	Type of bolts	M / "	=	*24*	
$L_{tot\ (with\ comb.\ buckling)}$	=	*0*	mm	End distance bolt	e1	=	*40*	mm
$a*L_{tot\ (with\ comb.\ buckling)}$	=	*0*	mm	Centre-centre spacing bolt	s1	=	*70*	mm
$L_{perpendicular\ force}$	=	*0*	mm	Edge distance bolt	e2	=	*40*	mm
Position perpendicular force	=	*1*	(⌉=1, ⌋=2)	Boltquality	4.6/5.6/8.8/10.9	=	*8,8*	
Column profile?	=	*2*	no=1, yes=2	Rolled screw threads		=	*1*	
Thickness tie plate	=	*12*	mm	Dubble strap joint no=1, yes=2		=	*1*	

Summary checks :

1 - Check tension on member :

$UC_1 = N_{Ed} / N_{t.Rd}$ = **0,51** **< 1**

2 - Check perpendicular force on member :

$UC_2 = M_{Ed} / M_{c.Rd}$ = **n.v.t.** **< 1**

3 - Check of the member slenderness :

$UC_3 = C_{max;buc} / C_{perm}$ = **68** **< 120**

4 - Check stress in member due to compression without excentricity:

$UC_4 = N_{E;d} / (C_{max;buc} \times N_{b;Rd})$ = **0,84** **< 1**

5 - Check stress in member due to compression with excentricity:

$UC_{5-1} = N_{E;d} / (C_{max;buc} \times N_{b;Rd})$ = **n.v.t.** **< 1**

$UC_{5-2} = N_{E;d} / N_{b;Rd} + k_{yy} \times (M_{y;Ed} + DM_{y;Ed}) / (C_{LT} \times M_{y;Rk})$ = **n.v.t.** **< 1**

6 - Check stress with combined buckling of two sections:

$UC_{5-1} = N_{E;d} / (C_{max;buc} \times N_{b;Rd})$ = **n.v.t.** **< 1**

$UC_{5-2} = N_{E;d} / N_{b;Rd} + k_{yy} \times (M_{y;Ed} + DM_{y;Ed}) / (C_{LT} \times M_{y;Rk})$ = **n.v.t.** **< 1**

7 - Check shear stress boltconnection:

$UC_7 = F_{v;Ed} / F_{v;Rd}$ = **0,56** **< 1**

8 - Check bearing stress boltconnection:

$UC_8 = F_{b;Ed} / F_{b;Rd}$ = **0,69** **< 1**

Remarks:

The maximum increase of stress or totalstress is(*2) : **$U.C_{max}$ = 0,84 = 84%**

(*1) Eventually, with the checks of the stresses, the cross-section reduction method is used according to prEN 1993-1-5.

(*2) The total stress or increase of stress has been related to the permissible stress.

Revision :	0	A	B	C	D	E	F
Date :	5-feb-2014						
Name :	M. Glegola						
Checked :	J. Hollaar						

Referentienr :	13039140509	**Berekening :**	B.14008
Project	: 150 kV lijn Leiden - Zoetermeer		
Part	: mast 52		

D&C ENGINEERING

Check equal leg angle-members according to Eurocode 3, prEN 1993-1-1 : 2003

File prEN 1993-1-1.revB.xls d.d. 2-32012, JG

Check section: *Vak 5* *diagonalen*

Memberforces : **(Attention! pressure = "-" and tension ="+")**

Compression:	N_{Sd}	=	*-80,3*	kN	***Combined forces diagonal:***			
Tension:	N_{Sd}	=	*69,1*	kN	$N_{comb1;c;s;d}$ (min. Compr. or tension)	=	*0*	kN
	$F_{perpend.;s;d}$	=	*0*	kN	$N_{comb2;c;s;d}$ (max. compression)	=	*0*	kN

Angle profile : *H100/75/7* (*1)

h	=	*100*	mm	I_y	=	*1179878*	mm^4
b	=	*75*	mm	$W_{y;el;eff.1}$	=	*14444*	mm^3
t_f	=	*7*	mm	$W_{y;el;eff.2}$	=	*64418*	mm^3
y_s	=	*18,3*	mm	i_y	=	*31,5*	mm
A_{bruto}	=	*1187*	mm^2	i_v	=	*15,9*	mm

Material :

Mat. qual. Fe360 / Fe510	=	*Fe360*		Permissible stress $f_{y;d}$	=	*235,0*	N/mm^2

Geometry section and bolts:

$L_{y;cr}$	=	*4360*	mm	No. bolts / end / flange	=	*1*	
$L_{v;cr}$	=	*2180*	mm	Type of bolts M / "	=	*24*	
$L_{tot\ (with\ comb.\ buckling)}$	=	*0*	mm	End distance bolt e1	=	*45*	mm
$a*L_{tot\ (with\ comb.\ buckling)}$	=	*0*	mm	Centre-centre spacing bolt s1	=	*70*	mm
$L_{perpendicular\ force}$	=	*0*	mm	Edge distance bolt e2	=	*35*	mm
Position perpendicular force	=	*1*	(⌉=1, ⌋=2)	Boltquality 4.6/5.6/8.8/10.9	=	*4,6*	
Column profile?	=	*1*	no=1, yes=2	Rolled screw threads	=	*1*	
Thickness tie plate	=	*7*	mm	Dubble strap joint no=1, yes=2	=	*1*	
				Staggered holes no=1, yes=2	=	*1*	

Summary checks :

1 - Check tension on member :

$UC_1 = N_{Ed} / N_{t.Rd}$ = **0,78** **< 1**

2 - Check perpendicular force on member :

$UC_2 = M_{Ed} / M_{c.Rd}$ = **n.v.t.** **< 1**

3 - Check of the member slenderness :

$UC_3 = C_{max;buc} / C_{perm}$ = **138** **< 200 or 240**

4 - Check stress in member due to compression without excentricity:

$UC_4 = N_{E;d} / (C_{max;buc} \times N_{b;Rd})$ = **n.v.t.** **< 1**

5 - Check stress in member due to compression with excentricity:

$UC_{5-1} = N_{E;d} / (C_{max;buc} \times N_{b;Rd})$ = **0,82** **< 1**

$UC_{5-2} = N_{E;d} / N_{b;Rd} + k_{yy} \times (M_{y;Ed} + DM_{y;Ed}) / (C_{LT} \times M_{y;Rk})$ = **1,20** **> 1 !!**

6 - Check stress with combined buckling of two sections:

$UC_{5-1} = N_{E;d} / (C_{max;buc} \times N_{b;Rd})$ = **n.v.t.** **< 1**

$UC_{5-2} = N_{E;d} / N_{b;Rd} + k_{yy} \times (M_{y;Ed} + DM_{y;Ed}) / (C_{LT} \times M_{y;Rk})$ = **n.v.t.** **< 1**

7 - Check shear stress boltconnection:

$UC_7 = F_{v;Ed} / F_{v;Rd}$ = **1,18** **> 1 !!**

8 - Check bearing stress boltconnection:

$UC_8 = F_{b;Ed} / F_{b;Rd}$ = **1,20** **> 1 !!**

Remarks:

The maximum increase of stress or totalstress is(*2) : **$U.C_{max}$ = 1,20 = 120%**

(*1) Eventually, with the checks of the stresses, the cross-section reduction method is used according to prEN 1993-1-5.

(*2) The total stress or increase of stress has been related to the permissible stress.

Revision :	0	A	B	C	D	E	F
Date :	5-feb-2014						
Name :	M. Glegola						
Checked :	J. Hollaar						

Referentienr :	13039140509	**Berekening :**	B.14008
Project	: 150 kV lijn Leiden - Zoetermeer		
Part	: mast 52		

D&C ENGINEERING

Check equal leg angle-members according to Eurocode 3, prEN 1993-1-1 : 2003

File prEN 1993-1-1.revB.xls d.d. 2-32012, JG

Check section: *Vak 5 - diagonalen* **verzwaard**

Memberforces : **(Attention! pressure = "-" and tension ="+")**

Compression:	N_{Sd}	=	*-80,3*	kN	***Combined forces diagonal:***			
Tension:	N_{Sd}	=	*69,1*	kN	$N_{comb1;c;s;d}$ (min. Compr. or tension)	=	*0*	kN
	$F_{perpend.;s;d}$	=	*0*	kN	$N_{comb2;c;s;d}$ (max. compression)	=	*0*	kN

Angle profile : *H100/100/10* (*1)

h	=	*100*	mm	I_y	=	*1766764*	mm^4
b	=	*100*	mm	$W_{y;el;eff.1}$	=	*24615*	mm^3
t_f	=	*10*	mm	$W_{y;el;eff.2}$	=	*62597*	mm^3
y_s	=	*28,2*	mm	i_y	=	*30,4*	mm
A_{bruto}	=	*1915*	mm^2	i_v	=	*19,3*	mm

Material :

Mat. qual. Fe360 / Fe510	=	*Fe360*		Permissible stress $f_{y;d}$	=	*235,0*	N/mm^2

Geometry section and bolts:

$L_{y;cr}$	=	*4360*	mm	No. bolts / end / flange	=	*1*	
$L_{v;cr}$	=	*2180*	mm	Type of bolts M / "	=	*24*	
$L_{tot\ (with\ comb.\ buckling)}$	=	*0*	mm	End distance bolt e1	=	*45*	mm
$a^*L_{tot\ (with\ comb.\ buckling)}$	=	*0*	mm	Centre-centre spacing bolt s1	=	*70*	mm
$L_{perpendicular\ force}$	=	*0*	mm	Edge distance bolt e2	=	*35*	mm
Position perpendicular force	=	*1*	(⌉=1, ⌋=2)	Boltquality 4.6/5.6/8.8/10.9	=	*8,8*	
Column profile?	=	*1*	no=1, yes=2	Rolled screw threads	=	*1*	
Thickness tie plate	=	*12*	mm	Dubble strap joint no=1, yes=2	=	*1*	
				Staggered holes no=1, yes=2	=	*1*	

Summary checks :

1 - Check tension on member :

$UC_1 = N_{Ed} / N_{t.Rd}$ = **0,55** **< 1**

2 - Check perpendicular force on member :

$UC_2 = M_{Ed} / M_{c.Rd}$ = **n.v.t.** **< 1**

3 - Check of the member slenderness :

$UC_3 = C_{max;buc} / C_{perm}$ = **144** **< 200 or 240**

4 - Check stress in member due to compression without excentricity:

$UC_4 = N_{E;d} / (C_{max;buc} \times N_{b;Rd})$ = **n.v.t.** **< 1**

5 - Check stress in member due to compression with excentricity:

$UC_{5-1} = N_{E;d} / (C_{max;buc} \times N_{b;Rd})$ = **0,54** **< 1**

$UC_{5-2} = N_{E;d} / N_{b;Rd} + k_{yy} \times (M_{y;Ed} + DM_{y;Ed}) / (C_{LT} \times M_{y;Rk})$ = **0,89** **< 1**

6 - Check stress with combined buckling of two sections:

$UC_{5-1} = N_{E;d} / (C_{max;buc} \times N_{b;Rd})$ = **n.v.t.** **< 1**

$UC_{5-2} = N_{E;d} / N_{b;Rd} + k_{yy} \times (M_{y;Ed} + DM_{y;Ed}) / (C_{LT} \times M_{y;Rk})$ = **n.v.t.** **< 1**

7 - Check shear stress boltconnection:

$UC_7 = F_{v;Ed} / F_{v;Rd}$ = **0,59** **< 1**

8 - Check bearing stress boltconnection:

$UC_8 = F_{b;Ed} / F_{b;Rd}$ = **0,84** **< 1**

Remarks:

The maximum increase of stress or totalstress is(*2) : **$U.C_{max}$ = 0,89 = 89%**

(*1) Eventually, with the checks of the stresses, the cross-section reduction method is used according to prEN 1993-1-5.

(*2) The total stress or increase of stress has been related to the permissible stress.

Revision :	0	A	B	C	D	E	F
Date :	5-feb-2014						
Name :	M. Glegola						
Checked :	J. Hollaar						

Referentienr :	13039140509	**Berekening :**	B.14008
Project	: 150 kV lijn Leiden - Zoetermeer		
Part	: mast 52		

D&C ENGINEERING

Check equal leg angle-members according to Eurocode 3, prEN 1993-1-1 : 2003

File prEN 1993-1-1.revB.xls d.d. 2-32012, JG

Check section: *Vak 5* *hor. knikverkorters*

Memberforces : **(Attention! pressure = "-" and tension ="+")**

Compression:	N_{Sd}	=	-4,6	kN	***Combined forces diagonal:***			
Tension:	N_{Sd}	=	4,6	kN	$N_{comb1;c;s;d}$ (min. Compr. or tension)	=	0	kN
	$F_{perpend.;s;d}$	=	1,5	kN	$N_{comb2;c;s;d}$ (max. compression)	=	0	kN

Angle profile : *H50/40/5* (*1)

h	=	50	mm	I_y	=	103800	mm^4
b	=	40	mm	$W_{y;el;eff.1}$	=	2638	mm^3
t_f	=	5	mm	$W_{y;el;eff.2}$	=	9746	mm^3
y_s	=	10,7	mm	i_y	=	15,6	mm
A_{bruto}	=	427	mm^2	i_v	=	8,4	mm

Material :

Mat. qual. Fe360 / Fe510	=	Fe360		Permissible stress $f_{y;d}$	=	235,0	N/mm^2

Geometry section and bolts:

$L_{y;cr}$	=	1250	mm	No. bolts / end / flange	=	1	
$L_{v;cr}$	=	1250	mm	Type of bolts M / "	=	16	
$L_{tot\ (with\ comb.\ buckling)}$	=	0	mm	End distance bolt e1	=	25	mm
$a*L_{tot\ (with\ comb.\ buckling)}$	=	0	mm	Centre-centre spacing bolt s1	=	70	mm
$L_{perpendicular\ force}$	=	1250	mm	Edge distance bolt e2	=	35	mm
Position perpendicular force	=	1	(⌉=1, ⌋=2)	Boltquality 4.6/5.6/8.8/10.9	=	4,6	
Column profile?	=	1	no=1, yes=2	Rolled screw threads	=	1	
Thickness tie plate	=	7	mm	Dubble strap joint no=1, yes=2	=	1	

Summary checks :

1 - Check tension on member :

$UC_1 = N_{Ed} / N_{t.Rd}$ = **0,06** **< 1**

2 - Check perpendicular force on member :

$UC_2 = M_{Ed} / M_{c.Rd}$ = **0,76** **< 1**

3 - Check of the member slenderness :

$UC_3 = C_{max;buc} / C_{perm}$ = **149** **< 200 or 240**

4 - Check stress in member due to compression without excentricity:

$UC_4 = N_{E;d} / (C_{max;buc} \times N_{b;Rd})$ = **n.v.t.** **< 1**

5 - Check stress in member due to compression with excentricity:

$UC_{5-1} = N_{E;d} / (C_{max;buc} \times N_{b;Rd})$ = **0,15** **< 1**

$UC_{5-2} = N_{E;d} / N_{b;Rd} + k_{yy} \times (M_{y;Ed} + DM_{y;Ed}) / (C_{LT} \times M_{y;Rk})$ = **0,19** **< 1**

6 - Check stress with combined buckling of two sections:

$UC_{5-1} = N_{E;d} / (C_{max;buc} \times N_{b;Rd})$ = **n.v.t.** **< 1**

$UC_{5-2} = N_{E;d} / N_{b;Rd} + k_{yy} \times (M_{y;Ed} + DM_{y;Ed}) / (C_{LT} \times M_{y;Rk})$ = **n.v.t.** **< 1**

7 - Check shear stress boltconnection:

$UC_7 = F_{v;Ed} / F_{v;Rd}$ = **0,15** **< 1**

8 - Check bearing stress boltconnection:

$UC_8 = F_{b;Ed} / F_{b;Rd}$ = **0,17** **< 1**

Remarks:

The maximum increase of stress or totalstress is(*2) : **$U.C_{max}$ = 0,76 = 76%**

(*1) Eventually, with the checks of the stresses, the cross-section reduction method is used according to prEN 1993-1-5.

(*2) The total stress or increase of stress has been related to the permissible stress.

Revision :	0	A	B	C	D	E	F
Date :	5-feb-2014						
Name :	M. Glegola						
Checked :	J. Hollaar						

Referentienr :	13039140509	**Berekening :**	B.14008
Project	: 150 kV lijn Leiden - Zoetermeer		
Part	: mast 52		

D&C ENGINEERING

Check equal leg angle-members according to Eurocode 3, prEN 1993-1-1 : 2003

File prEN 1993-1-1.revB.xls d.d. 2-32012, JG

Check section: *Vak 5* *schuine knikverkorters*

Memberforces : **(Attention! pressure = "-" and tension ="+")**

Compression:	N_{Sd}	=	-7,54	kN	***Combined forces diagonal:***			
Tension:	N_{Sd}	=	7,54	kN	$N_{comb1;c;s;d}$ (min. Compr. or tension)	=	0	kN
	$F_{perpend.;s;d}$	=	1,5	kN	$N_{comb2;c;s;d}$ (max. compression)	=	0	kN

Angle profile : *H50/40/5* (*1)

h	=	50	mm	I_y	=	103800	mm^4
b	=	40	mm	$W_{y;el;eff.1}$	=	2638	mm^3
t_f	=	5	mm	$W_{y;el;eff.2}$	=	9746	mm^3
y_s	=	10,7	mm	i_y	=	15,6	mm
A_{bruto}	=	427	mm^2	i_v	=	8,4	mm

Material :

Mat. qual. Fe360 / Fe510	=	Fe360		Permissible stress $f_{y;d}$	=	235,0	N/mm^2

Geometry section and bolts:

$L_{y;cr}$	=	2050	mm	No. bolts / end / flange	=	1	
$L_{v;cr}$	=	2050	mm	Type of bolts M / "	=	16	
$L_{tot\ (with\ comb.\ buckling)}$	=	0	mm	End distance bolt e1	=	25	mm
$a*L_{tot\ (with\ comb.\ buckling)}$	=	0	mm	Centre-centre spacing bolt s1	=	70	mm
$L_{perpendicular\ force}$	=	0	mm	Edge distance bolt e2	=	35	mm
Position perpendicular force	=	1	(⌉=1, ⌋=2)	Boltquality 4.6/5.6/8.8/10.9	=	4,6	
Column profile?	=	1	no=1, yes=2	Rolled screw threads	=	1	
Thickness tie plate	=	7	mm	Dubble strap joint no=1, yes=2	=	1	

Summary checks :

1 - Check tension on member :

$UC_1 = N_{Ed} / N_{t.Rd}$ = **0,10** **< 1**

2 - Check perpendicular force on member :

$UC_2 = M_{Ed} / M_{c.Rd}$ = **0,00** **< 1**

3 - Check of the member slenderness :

$UC_3 = C_{max;buc} / C_{perm}$ = **244** **< 200 or 240**

4 - Check stress in member due to compression without excentricity:

$UC_4 = N_{E;d} / (C_{max;buc} \times N_{b;Rd})$ = **n.v.t.** **< 1**

5 - Check stress in member due to compression with excentricity:

$UC_{5-1} = N_{E;d} / (C_{max;buc} \times N_{b;Rd})$ = **0,58** **< 1**

$UC_{5-2} = N_{E;d} / N_{b;Rd} + k_{yy} \times (M_{y;Ed} + DM_{y;Ed}) / (C_{LT} \times M_{y;Rk})$ = **0,67** **< 1**

6 - Check stress with combined buckling of two sections:

$UC_{5-1} = N_{E;d} / (C_{max;buc} \times N_{b;Rd})$ = **n.v.t.** **< 1**

$UC_{5-2} = N_{E;d} / N_{b;Rd} + k_{yy} \times (M_{y;Ed} + DM_{y;Ed}) / (C_{LT} \times M_{y;Rk})$ = **n.v.t.** **< 1**

7 - Check shear stress boltconnection:

$UC_7 = F_{v;Ed} / F_{v;Rd}$ = **0,25** **< 1**

8 - Check bearing stress boltconnection:

$UC_8 = F_{b;Ed} / F_{b;Rd}$ = **0,28** **< 1**

Remarks:

The maximum increase of stress or totalstress is(*2) : **$U.C_{max}$ = 0,67 = 67%**

(*1) Eventually, with the checks of the stresses, the cross-section reduction method is used according to prEN 1993-1-5.

(*2) The total stress or increase of stress has been related to the permissible stress.

Revision :	0	A	B	C	D	E	F
Date :	5-feb-2014						
Name :	M. Glegola						
Checked :	J. Hollaar						

Referentienr :	13039140509	**Berekening :**	B.14008
Project	: 150 kV lijn Leiden - Zoetermeer		
Part	: mast 52		

D&C ENGINEERING

Check equal leg angle-members according to Eurocode 3, prEN 1993-1-1 : 2003

File prEN 1993-1-1.revB.xls d.d. 2-32012, JG

Check section: *Vak 6* *randen*

Memberforces : **(Attention! pressure = "-" and tension ="+")**

Compression:	N_{Sd}	=	*-480,4*	kN	***Combined forces diagonal:***			
Tension:	N_{Sd}	=	*332,0*	kN	$N_{comb1;c;s;d}$ (min. Compr. or tension)	=	*0*	kN
	$F_{perpend.;s;d}$	=	*0*	kN	$N_{comb2;c;s;d}$ (max. compression)	=	*0*	kN

Angle profile : *H130/130/12* (*1)

h	=	*130*	mm	I_y	=	*4721746*	mm^4
b	=	*130*	mm	$W_{y;el;eff.1}$	=	*50442*	mm^3
t_f	=	*12*	mm	$W_{y;el;eff.2}$	=	*129742*	mm^3
y_s	=	*36,4*	mm	i_y	=	*39,7*	mm
A_{bruto}	=	*2997*	mm^2	i_v	=	*25,2*	mm

Material :

Mat. qual. Fe360 / Fe510	=	*Fe360*		Permissible stress $f_{y;d}$	=	*235,0*	N/mm^2

Geometry section and bolts:

$L_{y;cr}$	=	*2140*	mm	No. bolts / end / flange	=	*3*	**(Per flange !)**
$L_{v;cr}$	=	*2140*	mm	Type of bolts M / "	=	*24*	
$L_{tot\ (with\ comb.\ buckling)}$	=	*0*	mm	End distance bolt e1	=	*35*	mm
$a^*L_{tot\ (with\ comb.\ buckling)}$	=	*0*	mm	Centre-centre spacing bolt s1	=	*70*	mm
$L_{perpendicular\ force}$	=	*0*	mm	Edge distance bolt e2	=	*35*	mm
Position perpendicular force	=	*1*	(⌉=1, ⌋=2)	Boltquality 4.6/5.6/8.8/10.9	=	*4,6*	
Column profile?	=	*2*	no=1, yes=2	Rolled screw threads	=	*1*	
Thickness tie plate	=	*12*	mm	Dubble strap joint no=1, yes=2	=	*1*	

Summary checks :

1 - Check tension on member :

$UC_1 = N_{Ed} / N_{t.Rd}$ = **0,54** **< 1**

2 - Check perpendicular force on member :

$UC_2 = M_{Ed} / M_{c.Rd}$ = **n.v.t.** **< 1**

3 - Check of the member slenderness :

$UC_3 = C_{max;buc} / C_{perm}$ = **85** **< 120**

4 - Check stress in member due to compression without excentricity:

$UC_4 = N_{E;d} / (C_{max;buc} \times N_{b;Rd})$ = **1,03** **> 1 !!**

5 - Check stress in member due to compression with excentricity:

$UC_{5-1} = N_{E;d} / (C_{max;buc} \times N_{b;Rd})$ = **n.v.t.** **< 1**

$UC_{5-2} = N_{E;d} / N_{b;Rd} + k_{yy} \times (M_{y;Ed} + DM_{y;Ed}) / (C_{LT} \times M_{y;Rk})$ = **n.v.t.** **< 1**

6 - Check stress with combined buckling of two sections:

$UC_{5-1} = N_{E;d} / (C_{max;buc} \times N_{b;Rd})$ = **n.v.t.** **< 1**

$UC_{5-2} = N_{E;d} / N_{b;Rd} + k_{yy} \times (M_{y;Ed} + DM_{y;Ed}) / (C_{LT} \times M_{y;Rk})$ = **n.v.t.** **< 1**

7 - Check shear stress boltconnection:

$UC_7 = F_{v;Ed} / F_{v;Rd}$ = **1,18** **> 1 !!**

8 - Check bearing stress boltconnection:

$UC_8 = F_{b;Ed} / F_{b;Rd}$ = **0,72** **< 1**

Remarks:

The maximum increase of stress or totalstress is(*2) : **$U.C_{max}$ = 1,18 = 118%**

(*1) Eventually, with the checks of the stresses, the cross-section reduction method is used according to prEN 1993-1-5.

(*2) The total stress or increase of stress has been related to the permissible stress.

Revision :	0	A	B	C	D	E	F
Date :	5-feb-2014						
Name :	M. Glegola						
Checked :	J. Hollaar						

Referentienr :	13039140509	**Berekening :**	B.14008
Project	: 150 kV lijn Leiden - Zoetermeer		
Part	: mast 52		

D&C ENGINEERING

Check equal leg angle-members according to Eurocode 3, prEN 1993-1-1 : 2003

File prEN 1993-1-1.revB.xls d.d. 2-32012, JG

Check section: *Vak 6 - randen* *verzwaard*

Memberforces : **(Attention! pressure = "-" and tension ="+")**

Compression:	N_{Sd}	=	*-480,4*	kN	***Combined forces diagonal:***			
Tension:	N_{Sd}	=	*332,0*	kN	$N_{comb1;c;s;d}$ (min. Compr. or tension)	=	*0*	kN
	$F_{perpend.;s;d}$	=	*0*	kN	$N_{comb2;c;s;d}$ (max. compression)	=	*0*	kN

Angle profile : *H130/130/12* (*1)

h	=	*130*	mm	I_y	=	*4721746*	mm^4
b	=	*130*	mm	$W_{y;el;eff.1}$	=	*50442*	mm^3
t_f	=	*12*	mm	$W_{y;el;eff.2}$	=	*129742*	mm^3
y_s	=	*36,4*	mm	i_y	=	*39,7*	mm
A_{bruto}	=	*2997*	mm^2	i_v	=	*25,2*	mm

Material :

Mat. qual. Fe360 / Fe510	=	*Fe360*		Permissible stress $f_{y;d}$	=	*235,0*	N/mm^2

Geometry section and bolts:

$L_{y;cr}$	=	*1070*	mm	No. bolts / end / flange	=	*3*	**(Per flange !)**
$L_{v;cr}$	=	*1070*	mm	Type of bolts M / "	=	*24*	
$L_{tot\ (with\ comb.\ buckling)}$	=	*0*	mm	End distance bolt e1	=	*35*	mm
$a^*L_{tot\ (with\ comb.\ buckling)}$	=	*0*	mm	Centre-centre spacing bolt s1	=	*70*	mm
$L_{perpendicular\ force}$	=	*0*	mm	Edge distance bolt e2	=	*35*	mm
Position perpendicular force	=	*1*	(⌉=1, ⌋=2)	Boltquality 4.6/5.6/8.8/10.9	=	*8,8*	
Column profile?	=	*2*	no=1, yes=2	Rolled screw threads	=	*1*	
Thickness tie plate	=	*12*	mm	Dubble strap joint no=1, yes=2	=	*1*	

Summary checks :

1 - Check tension on member :

$UC_1 = N_{Ed} / N_{t.Rd}$ = **0,54** **< 1**

2 - Check perpendicular force on member :

$UC_2 = M_{Ed} / M_{c.Rd}$ = **n.v.t.** **< 1**

3 - Check of the member slenderness :

$UC_3 = C_{max;buc} / C_{perm}$ = **42** **< 120**

4 - Check stress in member due to compression without excentricity:

$UC_4 = N_{E;d} / (C_{max;buc} \times N_{b;Rd})$ = **0,75** **< 1**

5 - Check stress in member due to compression with excentricity:

$UC_{5-1} = N_{E;d} / (C_{max;buc} \times N_{b;Rd})$ = **n.v.t.** **< 1**

$UC_{5-2} = N_{E;d} / N_{b;Rd} + k_{yy} \times (M_{y;Ed} + DM_{y;Ed}) / (C_{LT} \times M_{y;Rk})$ = **n.v.t.** **< 1**

6 - Check stress with combined buckling of two sections:

$UC_{5-1} = N_{E;d} / (C_{max;buc} \times N_{b;Rd})$ = **n.v.t.** **< 1**

$UC_{5-2} = N_{E;d} / N_{b;Rd} + k_{yy} \times (M_{y;Ed} + DM_{y;Ed}) / (C_{LT} \times M_{y;Rk})$ = **n.v.t.** **< 1**

7 - Check shear stress boltconnection:

$UC_7 = F_{v;Ed} / F_{v;Rd}$ = **0,59** **< 1**

8 - Check bearing stress boltconnection:

$UC_8 = F_{b;Ed} / F_{b;Rd}$ = **0,72** **< 1**

Remarks:

The maximum increase of stress or totalstress is(*2) : **$U.C_{max}$ = 0,75 = 75%**

(*1) Eventually, with the checks of the stresses, the cross-section reduction method is used according to prEN 1993-1-5.

(*2) The total stress or increase of stress has been related to the permissible stress.

Revision :	0	A	B	C	D	E	F
Date :	5-feb-2014						
Name :	M. Glegola						
Checked :	J. Hollaar						

Referentienr :	13039140509	**Berekening :**	B.14008
Project	: 150 kV lijn Leiden - Zoetermeer		
Part	: mast 52		

D&C ENGINEERING

Check equal leg angle-members according to Eurocode 3, prEN 1993-1-1 : 2003

File prEN 1993-1-1.revB.xls d.d. 2-32012, JG

Check section: *Vak 6* *diagonalen voor- en achtervlak*

Memberforces : **(Attention! pressure = "-" and tension ="+")**

Compression:	N_{Sd}	=	*-226,8*	kN	***Combined forces diagonal:***			
Tension:	N_{Sd}	=	*220,3*	kN	$N_{comb1;c;s;d}$ (min. Compr. or tension)	=	*0*	kN
	$F_{perpend.;s;d}$	=	*0*	kN	$N_{comb2;c;s;d}$ (max. compression)	=	*0*	kN

Angle profile : *H150/150/14* (*1)

h	=	*150*	mm	I_y	=	*8453963*	mm^4
b	=	*150*	mm	$W_{y;el;eff.1}$	=	*78326*	mm^3
t_f	=	*14*	mm	$W_{y;el;eff.2}$	=	*200966*	mm^3
y_s	=	*42,1*	mm	i_y	=	*45,8*	mm
A_{bruto}	=	*4031*	mm^2	i_v	=	*29,1*	mm

Material :

Mat. qual. Fe360 / Fe510	=	*Fe360*		Permissible stress $f_{y;d}$	=	*235,0*	N/mm^2

Geometry section and bolts:

$L_{y;cr}$	=	*2821*	mm	No. bolts / end / flange	=	*3*	
$L_{v;cr}$	=	*2821*	mm	Type of bolts M / "	=	*24*	
$L_{tot\ (with\ comb.\ buckling)}$	=	*0*	mm	End distance bolt e1	=	*35*	mm
$a*L_{tot\ (with\ comb.\ buckling)}$	=	*0*	mm	Centre-centre spacing bolt s1	=	*70*	mm
$L_{perpendicular\ force}$	=	*0*	mm	Edge distance bolt e2	=	*40*	mm
Position perpendicular force	=	*1*	(⌉=1, ⌋=2)	Boltquality 4.6/5.6/8.8/10.9	=	*4,6*	
Column profile?	=	*1*	no=1, yes=2	Rolled screw threads	=	*1*	
Thickness tie plate	=	*14*	mm	Dubble strap joint no=1, yes=2	=	*1*	
				Staggered holes no=1, yes=2	=	*2*	

Summary checks :

1 - Check tension on member :

$UC_1 = N_{Ed} / N_{t.Rd}$ = **0,30** **< 1**

2 - Check perpendicular force on member :

$UC_2 = M_{Ed} / M_{c.Rd}$ = **n.v.t.** **< 1**

3 - Check of the member slenderness :

$UC_3 = C_{max;buc} / C_{perm}$ = **97** **< 200 or 240**

4 - Check stress in member due to compression without excentricity:

$UC_4 = N_{E;d} / (C_{max;buc} \times N_{b;Rd})$ = **0,41** **< 1**

5 - Check stress in member due to compression with excentricity:

$UC_{5-1} = N_{E;d} / (C_{max;buc} \times N_{b;Rd})$ = **n.v.t.** **< 1**

$UC_{5-2} = N_{E;d} / N_{b;Rd} + k_{yy} \times (M_{y;Ed} + DM_{y;Ed}) / (C_{LT} \times M_{y;Rk})$ = **n.v.t.** **< 1**

6 - Check stress with combined buckling of two sections:

$UC_{5-1} = N_{E;d} / (C_{max;buc} \times N_{b;Rd})$ = **n.v.t.** **< 1**

$UC_{5-2} = N_{E;d} / N_{b;Rd} + k_{yy} \times (M_{y;Ed} + DM_{y;Ed}) / (C_{LT} \times M_{y;Rk})$ = **n.v.t.** **< 1**

7 - Check shear stress boltconnection:

$UC_7 = F_{v;Ed} / F_{v;Rd}$ = **1,12** **> 1 !!**

8 - Check bearing stress boltconnection:

$UC_8 = F_{b;Ed} / F_{b;Rd}$ = **0,68** **< 1**

Remarks:

The maximum increase of stress or totalstress is(*2) : **$U.C_{max}$ = 1,12 = 112%**

(*1) Eventually, with the checks of the stresses, the cross-section reduction method is used according to prEN 1993-1-5.

(*2) The total stress or increase of stress has been related to the permissible stress.

Revision :	0	A	B	C	D	E	F
Date :	5-feb-2014						
Name :	M. Glegola						
Checked :	J. Hollaar						

Referentienr :	13039140509	**Berekening :**	B.14008
Project	: 150 kV lijn Leiden - Zoetermeer		
Part	: mast 52		

D&C ENGINEERING

Check equal leg angle-members according to Eurocode 3, prEN 1993-1-1 : 2003

File prEN 1993-1-1.revB.xls d.d. 2-32012, JG

Check section: *Vak 6 - diagonalen voor- en achtervlak* **verzwaard**

Memberforces : **(Attention! pressure = "-" and tension ="+")**

Compression:	N_{Sd}	=	-226,8	kN	***Combined forces diagonal:***			
Tension:	N_{Sd}	=	220,3	kN	$N_{comb1;c;s;d}$ (min. Compr. or tension)	=	0	kN
	$F_{perpend.;s;d}$	=	0	kN	$N_{comb2;c;s;d}$ (max. compression)	=	0	kN

Angle profile : *H150/150/14* (*1)

h	=	150	mm	I_y	=	8453963	mm^4
b	=	150	mm	$W_{y;el;eff.1}$	=	78326	mm^3
t_f	=	14	mm	$W_{y;el;eff.2}$	=	200966	mm^3
y_s	=	42,1	mm	i_y	=	45,8	mm
A_{bruto}	=	4031	mm^2	i_v	=	29,1	mm

Material :

Mat. qual. Fe360 / Fe510	=	Fe360		Permissible stress $f_{y;d}$	=	235,0	N/mm^2

Geometry section and bolts:

$L_{y;cr}$	=	2821	mm	No. bolts / end / flange	=	3	
$L_{v;cr}$	=	2821	mm	Type of bolts M / "	=	24	
$L_{tot\ (with\ comb.\ buckling)}$	=	0	mm	End distance bolt e1	=	35	mm
$a^*L_{tot\ (with\ comb.\ buckling)}$	=	0	mm	Centre-centre spacing bolt s1	=	70	mm
$L_{perpendicular\ force}$	=	0	mm	Edge distance bolt e2	=	40	mm
Position perpendicular force	=	1	(⌉=1, ⌋=2)	Boltquality 4.6/5.6/8.8/10.9	=	8,8	
Column profile?	=	1	no=1, yes=2	Rolled screw threads	=	1	
Thickness tie plate	=	14	mm	Dubble strap joint no=1, yes=2	=	1	
				Staggered holes no=1, yes=2	=	2	

Summary checks :

1 - Check tension on member :

$UC_1 = N_{Ed} / N_{t.Rd}$ = **0,30** **< 1**

2 - Check perpendicular force on member :

$UC_2 = M_{Ed} / M_{c.Rd}$ = **n.v.t.** **< 1**

3 - Check of the member slenderness :

$UC_3 = C_{max;buc} / C_{perm}$ = **97** **< 200 or 240**

4 - Check stress in member due to compression without excentricity:

$UC_4 = N_{E;d} / (C_{max;buc} \times N_{b;Rd})$ = **0,41** **< 1**

5 - Check stress in member due to compression with excentricity:

$UC_{5-1} = N_{E;d} / (C_{max;buc} \times N_{b;Rd})$ = **n.v.t.** **< 1**

$UC_{5-2} = N_{E;d} / N_{b;Rd} + k_{yy} \times (M_{y;Ed} + DM_{y;Ed}) / (C_{LT} \times M_{y;Rk})$ = **n.v.t.** **< 1**

6 - Check stress with combined buckling of two sections:

$UC_{5-1} = N_{E;d} / (C_{max;buc} \times N_{b;Rd})$ = **n.v.t.** **< 1**

$UC_{5-2} = N_{E;d} / N_{b;Rd} + k_{yy} \times (M_{y;Ed} + DM_{y;Ed}) / (C_{LT} \times M_{y;Rk})$ = **n.v.t.** **< 1**

7 - Check shear stress boltconnection:

$UC_7 = F_{v;Ed} / F_{v;Rd}$ = **0,56** **< 1**

8 - Check bearing stress boltconnection:

$UC_8 = F_{b;Ed} / F_{b;Rd}$ = **0,68** **< 1**

Remarks:

The maximum increase of stress or totalstress is(*2) : **$U.C_{max}$ = 0,68 = 68%**

(*1) Eventually, with the checks of the stresses, the cross-section reduction method is used according to prEN 1993-1-5.

(*2) The total stress or increase of stress has been related to the permissible stress.

Revision :	0	A	B	C	D	E	F
Date :	5-feb-2014						
Name :	M. Glegola						
Checked :	J. Hollaar						

Referentienr :	13039140509	**Berekening :**	B.14008
Project	: 150 kV lijn Leiden - Zoetermeer		
Part	: mast 52		

D&C ENGINEERING

Check equal leg angle-members according to Eurocode 3, prEN 1993-1-1 : 2003

File prEN 1993-1-1.revB.xls d.d. 2-32012, JG

Check section: *Vak 6* *diagonalen zijvlak*

Memberforces : **(Attention! pressure = "-" and tension ="+")**

Compression:	N_{Sd}	=	-56,5	kN	***Combined forces diagonal:***			
Tension:	N_{Sd}	=	59,0	kN	$N_{comb1;c;s;d}$ (min. Compr. or tension)	=	0	kN
	$F_{perpend.;s;d}$	=	0	kN	$N_{comb2;c;s;d}$ (max. compression)	=	0	kN

Angle profile : *H100/75/7* (*1)

h	=	100	mm	I_y	=	1179878	mm^4
b	=	75	mm	$W_{y;el;eff.1}$	=	14444	mm^3
t_f	=	7	mm	$W_{y;el;eff.2}$	=	64418	mm^3
y_s	=	18,3	mm	i_y	=	31,5	mm
A_{bruto}	=	1187	mm^2	i_v	=	15,9	mm

Material :

Mat. qual. Fe360 / Fe510	=	Fe360		Permissible stress $f_{y;d}$	=	235,0	N/mm^2

Geometry section and bolts:

$L_{y;cr}$	=	2382	mm	No. bolts / end / flange	=	1	
$L_{v;cr}$	=	2382	mm	Type of bolts M / "	=	24	
$L_{tot\ (with\ comb.\ buckling)}$	=	0	mm	End distance bolt e1	=	50	mm
$a^*L_{tot\ (with\ comb.\ buckling)}$	=	0	mm	Centre-centre spacing bolt s1	=	70	mm
$L_{perpendicular\ force}$	=	0	mm	Edge distance bolt e2	=	35	mm
Position perpendicular force	=	1	(⌉=1, ⌋=2)	Boltquality 4.6/5.6/8.8/10.9	=	4,6	
Column profile?	=	1	no=1, yes=2	Rolled screw threads	=	1	
Thickness tie plate	=	10	mm	Dubble strap joint no=1, yes=2	=	1	

Summary checks :

1 - Check tension on member :

$UC_1 = N_{Ed} / N_{t.Rd}$ = **0,66** **< 1**

2 - Check perpendicular force on member :

$UC_2 = M_{Ed} / M_{c.Rd}$ = **n.v.t.** **< 1**

3 - Check of the member slenderness :

$UC_3 = C_{max;buc} / C_{perm}$ = **150** **< 200 or 240**

4 - Check stress in member due to compression without excentricity:

$UC_4 = N_{E;d} / (C_{max;buc} \times N_{b;Rd})$ = **n.v.t.** **< 1**

5 - Check stress in member due to compression with excentricity:

$UC_{5-1} = N_{E;d} / (C_{max;buc} \times N_{b;Rd})$ = **0,65** **< 1**

$UC_{5-2} = N_{E;d} / N_{b;Rd} + k_{yy} \times (M_{y;Ed} + DM_{y;Ed}) / (C_{LT} \times M_{y;Rk})$ = **0,83** **< 1**

6 - Check stress with combined buckling of two sections:

$UC_{5-1} = N_{E;d} / (C_{max;buc} \times N_{b;Rd})$ = **n.v.t.** **< 1**

$UC_{5-2} = N_{E;d} / N_{b;Rd} + k_{yy} \times (M_{y;Ed} + DM_{y;Ed}) / (C_{LT} \times M_{y;Rk})$ = **n.v.t.** **< 1**

7 - Check shear stress boltconnection:

$UC_7 = F_{v;Ed} / F_{v;Rd}$ = **0,87** **< 1**

8 - Check bearing stress boltconnection:

$UC_8 = F_{b;Ed} / F_{b;Rd}$ = **0,92** **< 1**

Remarks:

The maximum increase of stress or totalstress is(*2) : **$U.C_{max}$ = 0,92 = 92%**

(*1) Eventually, with the checks of the stresses, the cross-section reduction method is used according to prEN 1993-1-5.

(*2) The total stress or increase of stress has been related to the permissible stress.

Revision :	0	A	B	C	D	E	F
Date :	5-feb-2014						
Name :	M. Glegola						
Checked :	J. Hollaar						

Referentienr :	13039140509	**Berekening :**	B.14008
Project	: 150 kV lijn Leiden - Zoetermeer		
Part	: mast 52		

D&C ENGINEERING

Check equal leg angle-members according to Eurocode 3, prEN 1993-1-1 : 2003

File prEN 1993-1-1.revB.xls d.d. 2-32012, JG

Check section: *Vak 6* *horizontaal*

Memberforces : **(Attention! pressure = "-" and tension ="+")**

Compression:	N_{Sd}	=	-2,2	kN	***Combined forces diagonal:***			
Tension:	N_{Sd}	=	2,2	kN	$N_{comb1;c;s;d}$ (min. Compr. or tension)	=	0	kN
	$F_{perpend.;s;d}$	=	1,5	kN	$N_{comb2;c;s;d}$ (max. compression)	=	0	kN

Angle profile : *H130/130/12* (*1)

h	=	130	mm	I_y	=	4721746	mm^4
b	=	130	mm	$W_{y;el;eff.1}$	=	50442	mm^3
t_f	=	12	mm	$W_{y;el;eff.2}$	=	129742	mm^3
y_s	=	36,4	mm	i_y	=	39,7	mm
A_{bruto}	=	2997	mm^2	i_v	=	25,2	mm

Material :

Mat. qual. Fe360 / Fe510	=	Fe360		Permissible stress $f_{y;d}$	=	235,0	N/mm^2

Geometry section and bolts:

$L_{y;cr}$	=	3952	mm	No. bolts / end / flange	=	2	
$L_{v;cr}$	=	3952	mm	Type of bolts M / "	=	24	
L_{tot} (with comb. buckling)	=	0	mm	End distance bolt e1	=	35	mm
$a*L_{tot}$ (with comb. biuckling)	=	0	mm	Centre-centre spacing bolt s1	=	70	mm
$L_{perpendicular\ force}$	=	3952	mm	Edge distance bolt e2	=	20	mm
Position perpendicular force	=	1	(⌉=1, ⌋=2)	Boltquality 4.6/5.6/8.8/10.9	=	4,6	
Column profile?	=	1	no=1, yes=2	Rolled screw threads	=	1	
Thickness tie plate	=	12	mm	Dubble strap joint no=1, yes=2	=	1	
				Staggered holes no=1, yes=2	=	2	

Summary checks :

1 - Check tension on member :

$UC_1 = N_{Ed} / N_{t.Rd}$ = **0,00** **< 1**

2 - Check perpendicular force on member :

$UC_2 = M_{Ed} / M_{c.Rd}$ = **0,13** **< 1**

3 - Check of the member slenderness :

$UC_3 = C_{max;buc} / C_{perm}$ = **157** **< 200 or 240**

4 - Check stress in member due to compression without excentricity:

$UC_4 = N_{E;d} / (C_{max;buc} \times N_{b;Rd})$ = **0,01** **< 1**

5 - Check stress in member due to compression with excentricity:

$UC_{5-1} = N_{E;d} / (C_{max;buc} \times N_{b;Rd})$ = **n.v.t.** **< 1**

$UC_{5-2} = N_{E;d} / N_{b;Rd} + k_{yy} \times (M_{y;Ed} + DM_{y;Ed}) / (C_{LT} \times M_{y;Rk})$ = **n.v.t.** **< 1**

6 - Check stress with combined buckling of two sections:

$UC_{5-1} = N_{E;d} / (C_{max;buc} \times N_{b;Rd})$ = **n.v.t.** **< 1**

$UC_{5-2} = N_{E;d} / N_{b;Rd} + k_{yy} \times (M_{y;Ed} + DM_{y;Ed}) / (C_{LT} \times M_{y;Rk})$ = **n.v.t.** **< 1**

7 - Check shear stress boltconnection:

$UC_7 = F_{v;Ed} / F_{v;Rd}$ = **0,02** **< 1**

8 - Check bearing stress boltconnection:

$UC_8 = F_{b;Ed} / F_{b;Rd}$ = **0,07** **< 1**

Remarks:

The maximum increase of stress or totalstress is(*2) : **$U.C_{max}$ = 0,13 = 13%**

(*1) Eventually, with the checks of the stresses, the cross-section reduction method is used according to prEN 1993-1-5.

(*2) The total stress or increase of stress has been related to the permissible stress.

Revision :	0	A	B	C	D	E	F
Date :	5-feb-2014						
Name :	M. Glegola						
Checked :	J. Hollaar						

Referentienr :	13039140509	**Berekening :**	B.14008
Project	: 150 kV lijn Leiden - Zoetermeer		
Part	: mast 52		

D&C ENGINEERING

Check equal leg angle-members according to Eurocode 3, prEN 1993-1-1 : 2003

File prEN 1993-1-1.revB.xls d.d. 2-32012, JG

Check section: *Vak 6* *hor. knikverkorters*

Memberforces : **(Attention! pressure = "-" and tension ="+")**

Compression:	N_{Sd}	=	*-4,80*	kN	***Combined forces diagonal:***			
Tension:	N_{Sd}	=	*4,80*	kN	$N_{comb1;c;s;d}$ (min. Compr. or tension)	=	*0*	kN
	$F_{perpend.;s;d}$	=	*1,5*	kN	$N_{comb2;c;s;d}$ (max. compression)	=	*0*	kN

Angle profile : *H50/40/5* (*1)

h	=	*50*	mm	I_y	=	*103800*	mm^4
b	=	*40*	mm	$W_{y;el;eff.1}$	=	*2638*	mm^3
t_f	=	*5*	mm	$W_{y;el;eff.2}$	=	*9746*	mm^3
y_s	=	*10,7*	mm	i_y	=	*15,6*	mm
A_{bruto}	=	*427*	mm^2	i_v	=	*8,4*	mm

Material :

Mat. qual. Fe360 / Fe510	=	*Fe360*		Permissible stress $f_{y;d}$	=	*235,0*	N/mm^2

Geometry section and bolts:

$L_{y;cr}$	=	*1250*	mm	No. bolts / end / flange	=	*1*	
$L_{v;cr}$	=	*1250*	mm	Type of bolts M / "	=	*16*	
$L_{tot\ (with\ comb.\ buckling)}$	=	*0*	mm	End distance bolt e1	=	*25*	mm
$a*L_{tot\ (with\ comb.\ buckling)}$	=	*0*	mm	Centre-centre spacing bolt s1	=	*70*	mm
$L_{perpendicular\ force}$	=	*1250*	mm	Edge distance bolt e2	=	*35*	mm
Position perpendicular force	=	*1*	(⌉=1, ⌋=2)	Boltquality 4.6/5.6/8.8/10.9	=	*4,6*	
Column profile?	=	*1*	no=1, yes=2	Rolled screw threads	=	*1*	
Thickness tie plate	=	*7*	mm	Dubble strap joint no=1, yes=2	=	*1*	

Summary checks :

1 - Check tension on member :

$UC_1 = N_{Ed} / N_{t.Rd}$ = **0,06** **< 1**

2 - Check perpendicular force on member :

$UC_2 = M_{Ed} / M_{c.Rd}$ = **0,76** **< 1**

3 - Check of the member slenderness :

$UC_3 = C_{max;buc} / C_{perm}$ = **149** **< 200 or 240**

4 - Check stress in member due to compression without excentricity:

$UC_4 = N_{E;d} / (C_{max;buc} \times N_{b;Rd})$ = **n.v.t.** **< 1**

5 - Check stress in member due to compression with excentricity:

$UC_{5-1} = N_{E;d} / (C_{max;buc} \times N_{b;Rd})$ = **0,15** **< 1**

$UC_{5-2} = N_{E;d} / N_{b;Rd} + k_{yy} \times (M_{y;Ed} + DM_{y;Ed}) / (C_{LT} \times M_{y;Rk})$ = **0,20** **< 1**

6 - Check stress with combined buckling of two sections:

$UC_{5-1} = N_{E;d} / (C_{max;buc} \times N_{b;Rd})$ = **n.v.t.** **< 1**

$UC_{5-2} = N_{E;d} / N_{b;Rd} + k_{yy} \times (M_{y;Ed} + DM_{y;Ed}) / (C_{LT} \times M_{y;Rk})$ = **n.v.t.** **< 1**

7 - Check shear stress boltconnection:

$UC_7 = F_{v;Ed} / F_{v;Rd}$ = **0,16** **< 1**

8 - Check bearing stress boltconnection:

$UC_8 = F_{b;Ed} / F_{b;Rd}$ = **0,18** **< 1**

Remarks:

The maximum increase of stress or totalstress is(*2) : **$U.C_{max}$ = 0,76 = 76%**

(*1) Eventually, with the checks of the stresses, the cross-section reduction method is used according to prEN 1993-1-5.

(*2) The total stress or increase of stress has been related to the permissible stress.

Revision :	0	A	B	C	D	E	F
Date :	5-feb-2014						
Name :	M. Glegola						
Checked :	J. Hollaar						

Referentienr :	13039140509	**Berekening :**	B.14008
Project	: 150 kV lijn Leiden - Zoetermeer		
Part	: mast 52		

D&C ENGINEERING

Check equal leg angle-members according to Eurocode 3, prEN 1993-1-1 : 2003

File prEN 1993-1-1.revB.xls d.d. 2-32012, JG

Check section: *Vak 6* *schuine knikverkorters voorvlak*

Memberforces : **(Attention! pressure = "-" and tension ="+")**

Compression:	N_{Sd}	=	*-19,17*	kN	***Combined forces diagonal:***			
Tension:	N_{Sd}	=	*19,17*	kN	$N_{comb1;c;s;d}$ (min. Compr. or tension)	=	*0*	kN
	$F_{perpend.;s;d}$	=	*0*	kN	$N_{comb2;c;s;d}$ (max. compression)	=	*0*	kN

Angle profile : *H100/100/6* (*1)

h	=	*100*	mm	I_y	=	*680089*	mm^4
b	=	*100*	mm	$W_{y;el;eff.1}$	=	*11071*	mm^3
t_f	=	*6*	mm	$W_{y;el;eff.2}$	=	*29775*	mm^3
y_s	=	*22,8*	mm	i_y	=	*26,0*	mm
A_{bruto}	=	*1006*	mm^2	i_v	=	*16,6*	mm

Material :

Mat. qual. Fe360 / Fe510	=	*Fe360*		Permissible stress $f_{y;d}$	=	*235,0*	N/mm^2

Geometry section and bolts:

$L_{y;cr}$	=	*2080*	mm	No. bolts / end / flange	=	*2*	
$L_{v;cr}$	=	*2080*	mm	Type of bolts M / "	=	*24*	
$L_{tot\ (with\ comb.\ buckling)}$	=	*0*	mm	End distance bolt e1	=	*50*	mm
$a^*L_{tot\ (with\ comb.\ buckling)}$	=	*0*	mm	Centre-centre spacing bolt s1	=	*70*	mm
$L_{perpendicular\ force}$	=	*0*	mm	Edge distance bolt e2	=	*35*	mm
Position perpendicular force	=	*1*	(⌉=1, ⌋=2)	Boltquality 4.6/5.6/8.8/10.9	=	*4,6*	
Column profile?	=	*1*	no=1, yes=2	Rolled screw threads	=	*1*	
Thickness tie plate	=	*7*	mm	Dubble strap joint no=1, yes=2	=	*1*	

Summary checks :

1 - Check tension on member :

$UC_1 = N_{Ed} / N_{t.Rd}$ = **0,19** **< 1**

2 - Check perpendicular force on member :

$UC_2 = M_{Ed} / M_{c.Rd}$ = **n.v.t.** **< 1**

3 - Check of the member slenderness :

$UC_3 = C_{max;buc} / C_{perm}$ = **125** **< 200 or 240**

4 - Check stress in member due to compression without excentricity:

$UC_4 = N_{E;d} / (C_{max;buc} \times N_{b;Rd})$ = **0,19** **< 1**

5 - Check stress in member due to compression with excentricity:

$UC_{5-1} = N_{E;d} / (C_{max;buc} \times N_{b;Rd})$ = **n.v.t.** **< 1**

$UC_{5-2} = N_{E;d} / N_{b;Rd} + k_{yy} \times (M_{y;Ed} + DM_{y;Ed}) / (C_{LT} \times M_{y;Rk})$ = **n.v.t.** **< 1**

6 - Check stress with combined buckling of two sections:

$UC_{5-1} = N_{E;d} / (C_{max;buc} \times N_{b;Rd})$ = **n.v.t.** **< 1**

$UC_{5-2} = N_{E;d} / N_{b;Rd} + k_{yy} \times (M_{y;Ed} + DM_{y;Ed}) / (C_{LT} \times M_{y;Rk})$ = **n.v.t.** **< 1**

7 - Check shear stress boltconnection:

$UC_7 = F_{v;Ed} / F_{v;Rd}$ = **0,14** **< 1**

8 - Check bearing stress boltconnection:

$UC_8 = F_{b;Ed} / F_{b;Rd}$ = **0,17** **< 1**

Remarks:

The maximum increase of stress or totalstress is(*2) : **$U.C_{max}$ = 0,19 = 19%**

(*1) Eventually, with the checks of the stresses, the cross-section reduction method is used according to prEN 1993-1-5.

(*2) The total stress or increase of stress has been related to the permissible stress.

Revision :	0	A	B	C	D	E	F
Date :	5-feb-2014						
Name :	M. Glegola						
Checked :	J. Hollaar						

Referentienr :	13039140509	**Berekening :**	B.14008
Project	: 150 kV lijn Leiden - Zoetermeer		
Part	: mast 52		

D&C ENGINEERING

Check equal leg angle-members according to Eurocode 3, prEN 1993-1-1 : 2003

File prEN 1993-1-1.revB.xls d.d. 2-32012, JG

Check section: *Vak 6* *schuine knikverkorters zijvlak*

Memberforces : **(Attention! pressure = "-" and tension ="+")**

Compression:	N_{Sd}	=	-8,64	kN	***Combined forces diagonal:***			
Tension:	N_{Sd}	=	8,64	kN	$N_{comb1;c;s;d}$ (min. Compr. or tension)	=	0	kN
	$F_{perpend.;s;d}$	=	0	kN	$N_{comb2;c;s;d}$ (max. compression)	=	0	kN

Angle profile : *H50/40/5* (*1)

h	=	50	mm	I_y	=	103800	mm^4
b	=	40	mm	$W_{y;el;eff.1}$	=	2638	mm^3
t_f	=	5	mm	$W_{y;el;eff.2}$	=	9746	mm^3
y_s	=	10,7	mm	i_y	=	15,6	mm
A_{bruto}	=	427	mm^2	i_v	=	8,4	mm

Material :

Mat. qual. Fe360 / Fe510	=	Fe360		Permissible stress $f_{y;d}$	=	235,0	N/mm^2

Geometry section and bolts:

$L_{y;cr}$	=	2571	mm	No. bolts / end / flange	=	1	
$L_{v;cr}$	=	2571	mm	Type of bolts M / "	=	16	
$L_{tot\ (with\ comb.\ buckling)}$	=	0	mm	End distance bolt e1	=	50	mm
$a^*L_{tot\ (with\ comb.\ buckling)}$	=	0	mm	Centre-centre spacing bolt s1	=	70	mm
$L_{perpendicular\ force}$	=	0	mm	Edge distance bolt e2	=	35	mm
Position perpendicular force	=	1	(⌉=1, ⌋=2)	Boltquality 4.6/5.6/8.8/10.9	=	4,6	
Column profile?	=	1	no=1, yes=2	Rolled screw threads	=	1	
Thickness tie plate	=	7	mm	Dubble strap joint no=1, yes=2	=	1	

Summary checks :

1 - Check tension on member :

$UC_1 = N_{Ed} / N_{t.Rd}$ = **0,12** **< 1**

2 - Check perpendicular force on member :

$UC_2 = M_{Ed} / M_{c.Rd}$ = **n.v.t.** **< 1**

3 - Check of the member slenderness :

$UC_3 = C_{max;buc} / C_{perm}$ = **306** **< 200 or 240**

4 - Check stress in member due to compression without excentricity:

$UC_4 = N_{E;d} / (C_{max;buc} \times N_{b;Rd})$ = **n.v.t.** **< 1**

5 - Check stress in member due to compression with excentricity:

$UC_{5-1} = N_{E;d} / (C_{max;buc} \times N_{b;Rd})$ = **1,01** **> 1 !!**

$UC_{5-2} = N_{E;d} / N_{b;Rd} + k_{yy} \times (M_{y;Ed} + DM_{y;Ed}) / (C_{LT} \times M_{y;Rk})$ = **1,12** **> 1 !!**

6 - Check stress with combined buckling of two sections:

$UC_{5-1} = N_{E;d} / (C_{max;buc} \times N_{b;Rd})$ = **n.v.t.** **< 1**

$UC_{5-2} = N_{E;d} / N_{b;Rd} + k_{yy} \times (M_{y;Ed} + DM_{y;Ed}) / (C_{LT} \times M_{y;Rk})$ = **n.v.t.** **< 1**

7 - Check shear stress boltconnection:

$UC_7 = F_{v;Ed} / F_{v;Rd}$ = **0,29** **< 1**

8 - Check bearing stress boltconnection:

$UC_8 = F_{b;Ed} / F_{b;Rd}$ = **0,16** **< 1**

Remarks:

The maximum increase of stress or totalstress is(*2) : **$U.C_{max}$ = 1,12 = 112%**

(*1) Eventually, with the checks of the stresses, the cross-section reduction method is used according to prEN 1993-1-5.

(*2) The total stress or increase of stress has been related to the permissible stress.

Revision :	0	A	B	C	D	E	F
Date :	5-feb-2014						
Name :	M. Glegola						
Checked :	J. Hollaar						

Referentienr :	13039140509	**Berekening :**	B.14008
Project	: 150 kV lijn Leiden - Zoetermeer		
Part	: mast 52		

D&C ENGINEERING

Check equal leg angle-members according to Eurocode 3, prEN 1993-1-1 : 2003

File prEN 1993-1-1.revB.xls d.d. 2-32012, JG

Check section: *Vak 6 - schuine knikverkorters zijvlak* **verzwaard**

Memberforces : **(Attention! pressure = "-" and tension ="+")**

Compression:	N_{Sd}	=	-8,64	kN	***Combined forces diagonal:***			
Tension:	N_{Sd}	=	8,64	kN	$N_{comb1;c;s;d}$ (min. Compr. or tension)	=	0	kN
	$F_{perpend.;s;d}$	=	0	kN	$N_{comb2;c;s;d}$ (max. compression)	=	0	kN

Angle profile : H50/50/5 (*1)

h	=	50	mm	I_y	=	109643	mm^4
b	=	50	mm	$W_{y;el;eff.1}$	=	3049	mm^3
t_f	=	5	mm	$W_{y;el;eff.2}$	=	7811	mm^3
y_s	=	14,0	mm	i_y	=	15,1	mm
A_{bruto}	=	480	mm^2	i_v	=	9,6	mm

Material :

Mat. qual. Fe360 / Fe510	=	Fe360		Permissible stress $f_{y;d}$	=	235,0	N/mm^2

Geometry section and bolts:

$L_{y;cr}$	=	2571	mm	No. bolts / end / flange	=	1	
$L_{v;cr}$	=	2571	mm	Type of bolts M / "	=	16	
$L_{tot\ (with\ comb.\ buckling)}$	=	0	mm	End distance bolt e1	=	50	mm
$a^*L_{tot\ (with\ comb.\ buckling)}$	=	0	mm	Centre-centre spacing bolt s1	=	70	mm
$L_{perpendicular\ force}$	=	0	mm	Edge distance bolt e2	=	35	mm
Position perpendicular force	=	1	(⌉=1, ⌋=2)	Boltquality 4.6/5.6/8.8/10.9	=	8,8	
Column profile?	=	1	no=1, yes=2	Rolled screw threads	=	1	
Thickness tie plate	=	7	mm	Dubble strap joint no=1, yes=2	=	1	

Summary checks :

1 - Check tension on member :

$UC_1 = N_{Ed} / N_{t.Rd}$ = **0,12** **< 1**

2 - Check perpendicular force on member :

$UC_2 = M_{Ed} / M_{c.Rd}$ = **n.v.t.** **< 1**

3 - Check of the member slenderness :

$UC_3 = C_{max;buc} / C_{perm}$ = **268** **< 200 or 240**

4 - Check stress in member due to compression without excentricity:

$UC_4 = N_{E;d} / (C_{max;buc} \times N_{b;Rd})$ = **n.v.t.** **< 1**

5 - Check stress in member due to compression with excentricity:

$UC_{5-1} = N_{E;d} / (C_{max;buc} \times N_{b;Rd})$ = **0,70** **< 1**

$UC_{5-2} = N_{E;d} / N_{b;Rd} + k_{yy} \times (M_{y;Ed} + DM_{y;Ed}) / (C_{LT} \times M_{y;Rk})$ = **0,83** **< 1**

6 - Check stress with combined buckling of two sections:

$UC_{5-1} = N_{E;d} / (C_{max;buc} \times N_{b;Rd})$ = **n.v.t.** **< 1**

$UC_{5-2} = N_{E;d} / N_{b;Rd} + k_{yy} \times (M_{y;Ed} + DM_{y;Ed}) / (C_{LT} \times M_{y;Rk})$ = **n.v.t.** **< 1**

7 - Check shear stress boltconnection:

$UC_7 = F_{v;Ed} / F_{v;Rd}$ = **0,14** **< 1**

8 - Check bearing stress boltconnection:

$UC_8 = F_{b;Ed} / F_{b;Rd}$ = **0,16** **< 1**

Remarks:

The maximum increase of stress or totalstress is(*2) : **$U.C_{max}$ = 0,83 = 83%**

(*1) Eventually, with the checks of the stresses, the cross-section reduction method is used according to prEN 1993-1-5.

(*2) The total stress or increase of stress has been related to the permissible stress.

Revision :	0	A	B	C	D	E	F
Date :	5-feb-2014						
Name :	M. Glegola						
Checked :	J. Hollaar						

Referentienr :	13039140509	**Berekening :**	B.14008
Project	: 150 kV lijn Leiden - Zoetermeer		
Part	: mast 52		

D&C ENGINEERING

Check equal leg angle-members according to Eurocode 3, prEN 1993-1-1 : 2003

File prEN 1993-1-1.revB.xls d.d. 2-32012, JG

Check section: *Vak 7* *randen*

Memberforces : **(Attention! pressure = "-" and tension ="+")**

Compression:	N_{Sd}	=	-244,5	kN	***Combined forces diagonal:***			
Tension:	N_{Sd}	=	83,1	kN	$N_{comb1;c;s;d}$ (min. Compr. or tension)	=	0	kN
	$F_{perpend.;s;d}$	=	0	kN	$N_{comb2;c;s;d}$ (max. compression)	=	0	kN

Angle profile : *H130/130/12* (*1)

h	=	130	mm	I_y	=	4721746	mm^4
b	=	130	mm	$W_{y;el;eff.1}$	=	50442	mm^3
t_f	=	12	mm	$W_{y;el;eff.2}$	=	129742	mm^3
y_s	=	36,4	mm	i_y	=	39,7	mm
A_{bruto}	=	2997	mm^2	i_v	=	25,2	mm

Material :

Mat. qual. Fe360 / Fe510	=	Fe360		Permissible stress $f_{y;d}$	=	235,0	N/mm^2

Geometry section and bolts:

$L_{y;cr}$	=	2119	mm	No. bolts / end / flange	=	3	**(Per flange !)**
$L_{v;cr}$	=	2119	mm	Type of bolts M / "	=	24	
$L_{tot\ (with\ comb.\ buckling)}$	=	0	mm	End distance bolt e1	=	40	mm
$a*L_{tot\ (with\ comb.\ buckling)}$	=	0	mm	Centre-centre spacing bolt s1	=	80	mm
$L_{perpendicular\ force}$	=	0	mm	Edge distance bolt e2	=	40	mm
Position perpendicular force	=	1	(⌉=1, ⌋=2)	Boltquality 4.6/5.6/8.8/10.9	=	4,6	
Column profile?	=	2	no=1, yes=2	Rolled screw threads	=	1	
Thickness tie plate	=	12	mm	Dubble strap joint no=1, yes=2	=	1	

Summary checks :

1 - Check tension on member :

$UC_1 = N_{Ed} / N_{t.Rd}$ = **0,14** **< 1**

2 - Check perpendicular force on member :

$UC_2 = M_{Ed} / M_{c.Rd}$ = **n.v.t.** **< 1**

3 - Check of the member slenderness :

$UC_3 = C_{max;buc} / C_{perm}$ = **84** **< 120**

4 - Check stress in member due to compression without excentricity:

$UC_4 = N_{E;d} / (C_{max;buc} \times N_{b;Rd})$ = **0,52** **< 1**

5 - Check stress in member due to compression with excentricity:

$UC_{5-1} = N_{E;d} / (C_{max;buc} \times N_{b;Rd})$ = **n.v.t.** **< 1**

$UC_{5-2} = N_{E;d} / N_{b;Rd} + k_{yy} \times (M_{y;Ed} + DM_{y;Ed}) / (C_{LT} \times M_{y;Rk})$ = **n.v.t.** **< 1**

6 - Check stress with combined buckling of two sections:

$UC_{5-1} = N_{E;d} / (C_{max;buc} \times N_{b;Rd})$ = **n.v.t.** **< 1**

$UC_{5-2} = N_{E;d} / N_{b;Rd} + k_{yy} \times (M_{y;Ed} + DM_{y;Ed}) / (C_{LT} \times M_{y;Rk})$ = **n.v.t.** **< 1**

7 - Check shear stress boltconnection:

$UC_7 = F_{v;Ed} / F_{v;Rd}$ = **0,60** **< 1**

8 - Check bearing stress boltconnection:

$UC_8 = F_{b;Ed} / F_{b;Rd}$ = **0,25** **< 1**

Remarks:

The maximum increase of stress or totalstress is(*2) : **$U.C_{max}$ = 0,60 = 60%**

(*1) Eventually, with the checks of the stresses, the cross-section reduction method is used according to prEN 1993-1-5.

(*2) The total stress or increase of stress has been related to the permissible stress.

Revision :	0	A	B	C	D	E	F
Date :	5-feb-2014						
Name :	M. Glegola						
Checked :	J. Hollaar						

Referentienr :	13039140509	**Berekening :**	B.14008
Project	: 150 kV lijn Leiden - Zoetermeer		
Part	: mast 52		

D&C ENGINEERING

Check equal leg angle-members according to Eurocode 3, prEN 1993-1-1 : 2003

File prEN 1993-1-1.revB.xls d.d. 2-32012, JG

Check section: *Vak 7 diagonalen voor- en achtervlak*

Memberforces : **(Attention! pressure = "-" and tension ="+")**

Compression:	N_{Sd}	=	*-217,9*	kN	***Combined forces diagonal:***			
Tension:	N_{Sd}	=	*227,0*	kN	$N_{comb1;c;s;d}$ (min. Compr. or tension)	=	*0*	kN
	$F_{perpend.;s;d}$	=	*0*	kN	$N_{comb2;c;s;d}$ (max. compression)	=	*0*	kN

Angle profile : *H120/80/8* (*1)

h	=	*120*	mm	I_y	=	*2256520*	mm^4
b	=	*80*	mm	$W_{y;el;eff.1}$	=	*22266*	mm^3
t_f	=	*8*	mm	$W_{y;el;eff.2}$	=	*120944*	mm^3
y_s	=	*18,7*	mm	i_y	=	*38,2*	mm
A_{bruto}	=	*1549*	mm^2	i_v	=	*17,2*	mm

Material :

Mat. qual. Fe360 / Fe510	=	*Fe360*		Permissible stress $f_{y;d}$	=	*235,0*	N/mm^2

Geometry section and bolts:

$L_{y;cr}$	=	*4017*	mm	No. bolts / end / flange	=	*6*	
$L_{v;cr}$	=	*2009*	mm	Type of bolts M / "	=	*24*	
$L_{tot\ (with\ comb.\ buckling)}$	=	*0*	mm	End distance bolt e1	=	*35*	mm
$a*L_{tot\ (with\ comb.\ buckling)}$	=	*0*	mm	Centre-centre spacing bolt s1	=	*70*	mm
$L_{perpendicular\ force}$	=	*0*	mm	Edge distance bolt e2	=	*35*	mm
Position perpendicular force	=	*1*	(⌉=1, ⌋=2)	Boltquality 4.6/5.6/8.8/10.9	=	*4,6*	
Column profile?	=	*1*	no=1, yes=2	Rolled screw threads	=	*1*	
Thickness tie plate	=	*10*	mm	Dubble strap joint no=1, yes=2	=	*1*	

Summary checks :

1 - Check tension on member :

$UC_1 = N_{Ed} / N_{t.Rd}$ = **1,14** **> 1 !!**

2 - Check perpendicular force on member :

$UC_2 = M_{Ed} / M_{c.Rd}$ = **n.v.t.** **< 1**

3 - Check of the member slenderness :

$UC_3 = C_{max;buc} / C_{perm}$ = **117** **< 200 or 240**

4 - Check stress in member due to compression without excentricity:

$UC_4 = N_{E;d} / (C_{max;buc} \times N_{b;Rd})$ = **1,28** **> 1 !!**

5 - Check stress in member due to compression with excentricity:

$UC_{5-1} = N_{E;d} / (C_{max;buc} \times N_{b;Rd})$ = **n.v.t.** **< 1**

$UC_{5-2} = N_{E;d} / N_{b;Rd} + k_{yy} \times (M_{y;Ed} + DM_{y;Ed}) / (C_{LT} \times M_{y;Rk})$ = **n.v.t.** **< 1**

6 - Check stress with combined buckling of two sections:

$UC_{5-1} = N_{E;d} / (C_{max;buc} \times N_{b;Rd})$ = **n.v.t.** **< 1**

$UC_{5-2} = N_{E;d} / N_{b;Rd} + k_{yy} \times (M_{y;Ed} + DM_{y;Ed}) / (C_{LT} \times M_{y;Rk})$ = **n.v.t.** **< 1**

7 - Check shear stress boltconnection:

$UC_7 = F_{v;Ed} / F_{v;Rd}$ = **0,56** **< 1**

8 - Check bearing stress boltconnection:

$UC_8 = F_{b;Ed} / F_{b;Rd}$ = **0,74** **< 1**

Remarks:

The maximum increase of stress or totalstress is(*2) : **$U.C_{max}$ = 1,28 = 128%**

(*1) Eventually, with the checks of the stresses, the cross-section reduction method is used according to prEN 1993-1-5.

(*2) The total stress or increase of stress has been related to the permissible stress.

Revision :	0	A	B	C	D	E	F
Date :	5-feb-2014						
Name :	M. Glegola						
Checked :	J. Hollaar						

Referentienr :	13039140509	**Berekening :**	B.14008
Project	: 150 kV lijn Leiden - Zoetermeer		
Part	: mast 52		

D&C ENGINEERING

Check equal leg angle-members according to Eurocode 3, prEN 1993-1-1 : 2003

File prEN 1993-1-1.revB.xls d.d. 2-32012, JG

Check section: *Vak 7 - diagonalen voor- en achtervlak* **verzwaard**

Memberforces : **(Attention! pressure = "-" and tension ="+")**

Compression:	N_{Sd}	=	*-217,9*	kN	***Combined forces diagonal:***			
Tension:	N_{Sd}	=	*227,0*	kN	$N_{comb1;c;s;d}$ (min. Compr. or tension)	=	*0*	kN
	$F_{perpend.;s;d}$	=	*0*	kN	$N_{comb2;c;s;d}$ (max. compression)	=	*0*	kN

Angle profile : *H120/120/10* (*1)

h	=	*120*	mm	I_y	=	*3129382*	mm^4
b	=	*120*	mm	$W_{y;el;eff.1}$	=	*36027*	mm^3
t_f	=	*10*	mm	$W_{y;el;eff.2}$	=	*94438*	mm^3
y_s	=	*33,1*	mm	i_y	=	*36,7*	mm
A_{bruto}	=	*2318*	mm^2	i_v	=	*23,3*	mm

Material :

Mat. qual. Fe360 / Fe510	=	*Fe360*		Permissible stress $f_{y;d}$	=	*235,0*	N/mm^2

Geometry section and bolts:

$L_{y;cr}$	=	*4017*	mm	No. bolts / end / flange	=	*6*	
$L_{v;cr}$	=	*2009*	mm	Type of bolts M / "	=	*24*	
$L_{tot\ (with\ comb.\ buckling)}$	=	*0*	mm	End distance bolt e1	=	*35*	mm
$a^*L_{tot\ (with\ comb.\ buckling)}$	=	*0*	mm	Centre-centre spacing bolt s1	=	*70*	mm
$L_{perpendicular\ force}$	=	*0*	mm	Edge distance bolt e2	=	*35*	mm
Position perpendicular force	=	*1*	(⌉=1, ⌋=2)	Boltquality 4.6/5.6/8.8/10.9	=	*8,8*	
Column profile?	=	*1*	no=1, yes=2	Rolled screw threads	=	*1*	
Thickness tie plate	=	*10*	mm	Dubble strap joint no=1, yes=2	=	*1*	

Summary checks :

1 - Check tension on member :

$UC_1 = N_{Ed} / N_{t.Rd}$ = **0,74** **< 1**

2 - Check perpendicular force on member :

$UC_2 = M_{Ed} / M_{c.Rd}$ = **n.v.t.** **< 1**

3 - Check of the member slenderness :

$UC_3 = C_{max;buc} / C_{perm}$ = **109** **< 200 or 240**

4 - Check stress in member due to compression without excentricity:

$UC_4 = N_{E;d} / (C_{max;buc} \times N_{b;Rd})$ = **0,80** **< 1**

5 - Check stress in member due to compression with excentricity:

$UC_{5-1} = N_{E;d} / (C_{max;buc} \times N_{b;Rd})$ = **n.v.t.** **< 1**

$UC_{5-2} = N_{E;d} / N_{b;Rd} + k_{yy} \times (M_{y;Ed} + DM_{y;Ed}) / (C_{LT} \times M_{y;Rk})$ = **n.v.t.** **< 1**

6 - Check stress with combined buckling of two sections:

$UC_{5-1} = N_{E;d} / (C_{max;buc} \times N_{b;Rd})$ = **n.v.t.** **< 1**

$UC_{5-2} = N_{E;d} / N_{b;Rd} + k_{yy} \times (M_{y;Ed} + DM_{y;Ed}) / (C_{LT} \times M_{y;Rk})$ = **n.v.t.** **< 1**

7 - Check shear stress boltconnection:

$UC_7 = F_{v;Ed} / F_{v;Rd}$ = **0,28** **< 1**

8 - Check bearing stress boltconnection:

$UC_8 = F_{b;Ed} / F_{b;Rd}$ = **0,59** **< 1**

Remarks:

The maximum increase of stress or totalstress is(*2) : **$U.C_{max}$ = 0,80 = 80%**

(*1) Eventually, with the checks of the stresses, the cross-section reduction method is used according to prEN 1993-1-5.

(*2) The total stress or increase of stress has been related to the permissible stress.

Revision :	0	A	B	C	D	E	F
Date :	5-feb-2014						
Name :	M. Glegola						
Checked :	J. Hollaar						

Referentienr :	13039140509	**Berekening :**	B.14008
Project	: 150 kV lijn Leiden - Zoetermeer		
Part	: mast 52		

D&C ENGINEERING

Check equal leg angle-members according to Eurocode 3, prEN 1993-1-1 : 2003

File prEN 1993-1-1.revB.xls d.d. 2-32012, JG

Check section: *Vak 7* *diagonalen zijvlak*

Memberforces : **(Attention! pressure = "-" and tension ="+")**

Compression:	N_{Sd}	=	-72,3	kN	***Combined forces diagonal:***			
Tension:	N_{Sd}	=	71,4	kN	$N_{comb1;c;s;d}$ (min. Compr. or tension)	=	0	kN
	$F_{perpend.;s;d}$	=	0	kN	$N_{comb2;c;s;d}$ (max. compression)	=	0	kN

Angle profile : *H120/80/8* (*1)

h	=	120	mm	I_y	=	2256520	mm^4
b	=	80	mm	$W_{y;el;eff.1}$	=	22266	mm^3
t_f	=	8	mm	$W_{y;el;eff.2}$	=	120944	mm^3
y_s	=	18,7	mm	i_y	=	38,2	mm
A_{bruto}	=	1549	mm^2	i_v	=	17,2	mm

Material :

Mat. qual. Fe360 / Fe510	=	Fe360		Permissible stress $f_{y;d}$	=	235,0	N/mm^2

Geometry section and bolts:

$L_{y;cr}$	=	4747	mm	No. bolts / end / flange	=	2	
$L_{v;cr}$	=	2009	mm	Type of bolts M / "	=	24	
$L_{tot\ (with\ comb.\ buckling)}$	=	0	mm	End distance bolt e1	=	35	mm
$a^*L_{tot\ (with\ comb.\ buckling)}$	=	0	mm	Centre-centre spacing bolt s1	=	70	mm
$L_{perpendicular\ force}$	=	0	mm	Edge distance bolt e2	=	35	mm
Position perpendicular force	=	1	(⌉=1, ⌋=2)	Boltquality 4.6/5.6/8.8/10.9	=	4,6	
Column profile?	=	1	no=1, yes=2	Rolled screw threads	=	1	
Thickness tie plate	=	10	mm	Dubble strap joint no=1, yes=2	=	1	

Summary checks :

1 - Check tension on member :

$UC_1 = N_{Ed} / N_{t.Rd}$ = **0,44** **< 1**

2 - Check perpendicular force on member :

$UC_2 = M_{Ed} / M_{c.Rd}$ = **n.v.t.** **< 1**

3 - Check of the member slenderness :

$UC_3 = C_{max;buc} / C_{perm}$ = **124** **< 200 or 240**

4 - Check stress in member due to compression without excentricity:

$UC_4 = N_{E;d} / (C_{max;buc} \times N_{b;Rd})$ = **0,48** **< 1**

5 - Check stress in member due to compression with excentricity:

$UC_{5-1} = N_{E;d} / (C_{max;buc} \times N_{b;Rd})$ = **n.v.t.** **< 1**

$UC_{5-2} = N_{E;d} / N_{b;Rd} + k_{yy} \times (M_{y;Ed} + DM_{y;Ed}) / (C_{LT} \times M_{y;Rk})$ = **n.v.t.** **< 1**

6 - Check stress with combined buckling of two sections:

$UC_{5-1} = N_{E;d} / (C_{max;buc} \times N_{b;Rd})$ = **n.v.t.** **< 1**

$UC_{5-2} = N_{E;d} / N_{b;Rd} + k_{yy} \times (M_{y;Ed} + DM_{y;Ed}) / (C_{LT} \times M_{y;Rk})$ = **n.v.t.** **< 1**

7 - Check shear stress boltconnection:

$UC_7 = F_{v;Ed} / F_{v;Rd}$ = **0,53** **< 1**

8 - Check bearing stress boltconnection:

$UC_8 = F_{b;Ed} / F_{b;Rd}$ = **0,69** **< 1**

Remarks:

The maximum increase of stress or totalstress is(*2) : **$U.C_{max}$ = 0,69 = 69%**

(*1) Eventually, with the checks of the stresses, the cross-section reduction method is used according to prEN 1993-1-5.

(*2) The total stress or increase of stress has been related to the permissible stress.

Revision :	0	A	B	C	D	E	F
Date :	5-feb-2014						
Name :	M. Glegola						
Checked :	J. Hollaar						

Referentienr :	13039140509	**Berekening :**	B.14008
Project	: 150 kV lijn Leiden - Zoetermeer		
Part	: mast 52		

D&C ENGINEERING

Check equal leg angle-members according to Eurocode 3, prEN 1993-1-1 : 2003

File prEN 1993-1-1.revB.xls d.d. 2-32012, JG

Check section: *Vak 7* *horizontaal zijvlak*

Memberforces : **(Attention! pressure = "-" and tension ="+")**

Compression:	N_{Sd}	=	-7,5	kN	***Combined forces diagonal:***			
Tension:	N_{Sd}	=	6,0	kN	$N_{comb1;c;s;d}$ (min. Compr. or tension)	=	0	kN
	$F_{perpend.;s;d}$	=	1,5	kN	$N_{comb2;c;s;d}$ (max. compression)	=	0	kN

Angle profile : *H75/75/8* (*1)

h	=	75	mm	I_y	=	588737	mm^4
b	=	75	mm	$W_{y;el;eff.1}$	=	10964	mm^3
t_f	=	8	mm	$W_{y;el;eff.2}$	=	27635	mm^3
y_s	=	21,3	mm	i_y	=	22,7	mm
A_{bruto}	=	1147	mm^2	i_v	=	14,4	mm

Material :

Mat. qual. Fe360 / Fe510	=	Fe360		Permissible stress $f_{y;d}$	=	235,0	N/mm^2

Geometry section and bolts:

$L_{y;cr}$	=	4252	mm	No. bolts / end / flange	=	1	
$L_{v;cr}$	=	4252	mm	Type of bolts M / "	=	20	
$L_{tot\ (with\ comb.\ buckling)}$	=	0	mm	End distance bolt e1	=	30	mm
$a^*L_{tot\ (with\ comb.\ buckling)}$	=	0	mm	Centre-centre spacing bolt s1	=	70	mm
$L_{perpendicular\ force}$	=	4252	mm	Edge distance bolt e2	=	35	mm
Position perpendicular force	=	1	(⌉=1, ⌋=2)	Boltquality 4.6/5.6/8.8/10.9	=	4,6	
Column profile?	=	1	no=1, yes=2	Rolled screw threads	=	1	
Thickness tie plate	=	8	mm	Dubble strap joint no=1, yes=2	=	1	

Summary checks :

1 - Check tension on member :

$UC_1 = N_{Ed} / N_{t.Rd}$ = **0,05** **< 1**

2 - Check perpendicular force on member :

$UC_2 = M_{Ed} / M_{c.Rd}$ = **0,62** **< 1**

3 - Check of the member slenderness :

$UC_3 = C_{max;buc} / C_{perm}$ = **295** **< 200 or 240**

4 - Check stress in member due to compression without excentricity:

$UC_4 = N_{E;d} / (C_{max;buc} \times N_{b;Rd})$ = **n.v.t.** **< 1**

5 - Check stress in member due to compression with excentricity:

$UC_{5-1} = N_{E;d} / (C_{max;buc} \times N_{b;Rd})$ = **0,30** **< 1**

$UC_{5-2} = N_{E;d} / N_{b;Rd} + k_{yy} \times (M_{y;Ed} + DM_{y;Ed}) / (C_{LT} \times M_{y;Rk})$ = **0,36** **< 1**

6 - Check stress with combined buckling of two sections:

$UC_{5-1} = N_{E;d} / (C_{max;buc} \times N_{b;Rd})$ = **n.v.t.** **< 1**

$UC_{5-2} = N_{E;d} / N_{b;Rd} + k_{yy} \times (M_{y;Ed} + DM_{y;Ed}) / (C_{LT} \times M_{y;Rk})$ = **n.v.t.** **< 1**

7 - Check shear stress boltconnection:

$UC_7 = F_{v;Ed} / F_{v;Rd}$ = **0,16** **< 1**

8 - Check bearing stress boltconnection:

$UC_8 = F_{b;Ed} / F_{b;Rd}$ = **0,11** **< 1**

Remarks:

The maximum increase of stress or totalstress is(*2) : **$U.C_{max}$ = 0,62 = 62%**

(*1) Eventually, with the checks of the stresses, the cross-section reduction method is used according to prEN 1993-1-5.

(*2) The total stress or increase of stress has been related to the permissible stress.

Revision :	0	A	B	C	D	E	F
Date :	5-feb-2014						
Name :	M. Glegola						
Checked :	J. Hollaar						

Referentienr :	13039140509	**Berekening :**	B.14008
Project	: 150 kV lijn Leiden - Zoetermeer		
Part	: mast 52		

D&C ENGINEERING

Check equal leg angle-members according to Eurocode 3, prEN 1993-1-1 : 2003

File prEN 1993-1-1.revB.xls d.d. 2-32012, JG

Check section: *Vak 7* *hor. knikverkorters*

Memberforces : **(Attention! pressure = "-" and tension ="+")**

Compression:	N_{Sd}	=	-2,3	kN	***Combined forces diagonal:***			
Tension:	N_{Sd}	=	2,3	kN	$N_{comb1;c;s;d}$ (min. Compr. or tension)	=	0	kN
	$F_{perpend.;s;d}$	=	1,5	kN	$N_{comb2;c;s;d}$ (max. compression)	=	0	kN

Angle profile : *H50/40/5* (*1)

h	=	50	mm	I_y	=	103800	mm^4
b	=	40	mm	$W_{y;el;eff.1}$	=	2638	mm^3
t_f	=	5	mm	$W_{y;el;eff.2}$	=	9746	mm^3
y_s	=	10,7	mm	i_y	=	15,6	mm
A_{bruto}	=	427	mm^2	i_v	=	8,4	mm

Material :

Mat. qual. Fe360 / Fe510	=	Fe360		Permissible stress $f_{y;d}$	=	235,0	N/mm^2

Geometry section and bolts:

$L_{y;cr}$	=	860	mm	No. bolts / end / flange	=	1	
$L_{v;cr}$	=	860	mm	Type of bolts M / "	=	16	
$L_{tot\ (with\ comb.\ buckling)}$	=	0	mm	End distance bolt e1	=	25	mm
$a^*L_{tot\ (with\ comb.\ buckling)}$	=	0	mm	Centre-centre spacing bolt s1	=	70	mm
$L_{perpendicular\ force}$	=	860	mm	Edge distance bolt e2	=	35	mm
Position perpendicular force	=	1	(⌉=1, ⌋=2)	Boltquality 4.6/5.6/8.8/10.9	=	4,6	
Column profile?	=	1	no=1, yes=2	Rolled screw threads	=	1	
Thickness tie plate	=	7	mm	Dubble strap joint no=1, yes=2	=	1	

Summary checks :

1 - Check tension on member :

$UC_1 = N_{Ed} / N_{t.Rd}$ = **0,03** **< 1**

2 - Check perpendicular force on member :

$UC_2 = M_{Ed} / M_{c.Rd}$ = **0,52** **< 1**

3 - Check of the member slenderness :

$UC_3 = C_{max;buc} / C_{perm}$ = **102** **< 200 or 240**

4 - Check stress in member due to compression without excentricity:

$UC_4 = N_{E;d} / (C_{max;buc} \times N_{b;Rd})$ = **n.v.t.** **< 1**

5 - Check stress in member due to compression with excentricity:

$UC_{5-1} = N_{E;d} / (C_{max;buc} \times N_{b;Rd})$ = **0,04** **< 1**

$UC_{5-2} = N_{E;d} / N_{b;Rd} + k_{yy} \times (M_{y;Ed} + DM_{y;Ed}) / (C_{LT} \times M_{y;Rk})$ = **0,06** **< 1**

6 - Check stress with combined buckling of two sections:

$UC_{5-1} = N_{E;d} / (C_{max;buc} \times N_{b;Rd})$ = **n.v.t.** **< 1**

$UC_{5-2} = N_{E;d} / N_{b;Rd} + k_{yy} \times (M_{y;Ed} + DM_{y;Ed}) / (C_{LT} \times M_{y;Rk})$ = **n.v.t.** **< 1**

7 - Check shear stress boltconnection:

$UC_7 = F_{v;Ed} / F_{v;Rd}$ = **0,08** **< 1**

8 - Check bearing stress boltconnection:

$UC_8 = F_{b;Ed} / F_{b;Rd}$ = **0,09** **< 1**

Remarks:

The maximum increase of stress or totalstress is(*2) : **$U.C_{max}$ = 0,52 = 52%**

(*1) Eventually, with the checks of the stresses, the cross-section reduction method is used according to prEN 1993-1-5.

(*2) The total stress or increase of stress has been related to the permissible stress.

Revision :	0	A	B	C	D	E	F
Date :	5-feb-2014						
Name :	M. Glegola						
Checked :	J. Hollaar						

Referentienr :	13039140509	**Berekening :**	B.14008
Project	: 150 kV lijn Leiden - Zoetermeer		
Part	: mast 52		

D&C ENGINEERING

Check equal leg angle-members according to Eurocode 3, prEN 1993-1-1 : 2003

File prEN 1993-1-1.revB.xls d.d. 2-32012, JG

Check section: *Vak 7* *schuine knikverkorters*

Memberforces : **(Attention! pressure = "-" and tension ="+")**

Compression:	N_{Sd}	=	-7,2	kN	***Combined forces diagonal:***			
Tension:	N_{Sd}	=	7,2	kN	$N_{comb1;c;s;d}$ (min. Compr. or tension)	=	0	kN
	$F_{perpend.;s;d}$	=	0	kN	$N_{comb2;c;s;d}$ (max. compression)	=	0	kN

Angle profile : *H50/40/5* (*1)

h	=	50	mm	I_y	=	103800	mm^4
b	=	40	mm	$W_{y;el;eff.1}$	=	2638	mm^3
t_f	=	5	mm	$W_{y;el;eff.2}$	=	9746	mm^3
y_s	=	10,7	mm	i_y	=	15,6	mm
A_{bruto}	=	427	mm^2	i_v	=	8,4	mm

Material :

Mat. qual. Fe360 / Fe510	=	Fe360		Permissible stress $f_{y;d}$	=	235,0	N/mm^2

Geometry section and bolts:

$L_{y;cr}$	=	2227	mm	No. bolts / end / flange	=	1	
$L_{v;cr}$	=	2227	mm	Type of bolts M / "	=	16	
$L_{tot\ (with\ comb.\ buckling)}$	=	0	mm	End distance bolt e1	=	25	mm
$a*L_{tot\ (with\ comb.\ buckling)}$	=	0	mm	Centre-centre spacing bolt s1	=	70	mm
$L_{perpendicular\ force}$	=	0	mm	Edge distance bolt e2	=	35	mm
Position perpendicular force	=	1	(⌉=1, ⌋=2)	Boltquality 4.6/5.6/8.8/10.9	=	4,6	
Column profile?	=	1	no=1, yes=2	Rolled screw threads	=	1	
Thickness tie plate	=	7	mm	Dubble strap joint no=1, yes=2	=	1	

Summary checks :

1 - Check tension on member :

$UC_1 = N_{Ed} / N_{t.Rd}$ = **0,10** **< 1**

2 - Check perpendicular force on member :

$UC_2 = M_{Ed} / M_{c.Rd}$ = **n.v.t.** **< 1**

3 - Check of the member slenderness :

$UC_3 = C_{max;buc} / C_{perm}$ = **265** **< 200 or 240**

4 - Check stress in member due to compression without excentricity:

$UC_4 = N_{E;d} / (C_{max;buc} \times N_{b;Rd})$ = **n.v.t.** **< 1**

5 - Check stress in member due to compression with excentricity:

$UC_{5-1} = N_{E;d} / (C_{max;buc} \times N_{b;Rd})$ = **0,64** **< 1**

$UC_{5-2} = N_{E;d} / N_{b;Rd} + k_{yy} \times (M_{y;Ed} + DM_{y;Ed}) / (C_{LT} \times M_{y;Rk})$ = **0,73** **< 1**

6 - Check stress with combined buckling of two sections:

$UC_{5-1} = N_{E;d} / (C_{max;buc} \times N_{b;Rd})$ = **n.v.t.** **< 1**

$UC_{5-2} = N_{E;d} / N_{b;Rd} + k_{yy} \times (M_{y;Ed} + DM_{y;Ed}) / (C_{LT} \times M_{y;Rk})$ = **n.v.t.** **< 1**

7 - Check shear stress boltconnection:

$UC_7 = F_{v;Ed} / F_{v;Rd}$ = **0,24** **< 1**

8 - Check bearing stress boltconnection:

$UC_8 = F_{b;Ed} / F_{b;Rd}$ = **0,27** **< 1**

Remarks:

The maximum increase of stress or totalstress is(*2) : **$U.C_{max}$ = 0,73 = 73%**

(*1) Eventually, with the checks of the stresses, the cross-section reduction method is used according to prEN 1993-1-5.

(*2) The total stress or increase of stress has been related to the permissible stress.

Revision :	0	A	B	C	D	E	F
Date :	5-feb-2014						
Name :	M. Glegola						
Checked :	J. Hollaar						

Referentienr :	13039140509	**Berekening :**	B.14008
Project	: 150 kV lijn Leiden - Zoetermeer		
Part	: mast 52		

D&C ENGINEERING

Check equal leg angle-members according to Eurocode 3, prEN 1993-1-1 : 2003

File prEN 1993-1-1.revB.xls d.d. 2-32012, JG

Check section: *Vak 8* *randen*

Memberforces : **(Attention! pressure = "-" and tension ="+")**

Compression:	N_{Sd}	=	*-196,5*	kN	***Combined forces diagonal:***			
Tension:	N_{Sd}	=	*84,8*	kN	$N_{comb1;c;s;d}$ (min. Compr. or tension)	=	*0*	kN
	$F_{perpend.;s;d}$	=	*0*	kN	$N_{comb2;c;s;d}$ (max. compression)	=	*0*	kN

Angle profile : *H120/80/8* (*1)

h	=	*120*	mm	I_y	=	*2256520*	mm^4
b	=	*80*	mm	$W_{y;el;eff.1}$	=	*22266*	mm^3
t_f	=	*8*	mm	$W_{y;el;eff.2}$	=	*120944*	mm^3
y_s	=	*18,7*	mm	i_y	=	*38,2*	mm
A_{bruto}	=	*1549*	mm^2	i_v	=	*17,2*	mm

Material :

Mat. qual. Fe360 / Fe510	=	*Fe360*		Permissible stress $f_{y;d}$	=	*235,0*	N/mm^2

Geometry section and bolts:

$L_{y;cr}$	=	*1570*	mm	No. bolts / end / flange	=	*4*	**(Per flange !)**
$L_{v;cr}$	=	*1570*	mm	Type of bolts M / "	=	*24*	
$L_{tot\ (with\ comb.\ buckling)}$	=	*0*	mm	End distance bolt e1	=	*35*	mm
$a^*L_{tot\ (with\ comb.\ buckling)}$	=	*0*	mm	Centre-centre spacing bolt s1	=	*125*	mm
$L_{perpendicular\ force}$	=	*0*	mm	Edge distance bolt e2	=	*35*	mm
Position perpendicular force	=	*1*	(⌉=1, ⌋=2)	Boltquality 4.6/5.6/8.8/10.9	=	*4,6*	
Column profile?	=	*2*	no=1, yes=2	Rolled screw threads	=	*1*	
Thickness tie plate	=	*12*	mm	Dubble strap joint no=1, yes=2	=	*1*	

Summary checks :

1 - Check tension on member :

$UC_1 = N_{Ed} / N_{t.Rd}$ = **0,29** **< 1**

2 - Check perpendicular force on member :

$UC_2 = M_{Ed} / M_{c.Rd}$ = **n.v.t.** **< 1**

3 - Check of the member slenderness :

$UC_3 = C_{max;buc} / C_{perm}$ = **91** **< 120**

4 - Check stress in member due to compression without excentricity:

$UC_4 = N_{E;d} / (C_{max;buc} \times N_{b;Rd})$ = **0,88** **< 1**

5 - Check stress in member due to compression with excentricity:

$UC_{5-1} = N_{E;d} / (C_{max;buc} \times N_{b;Rd})$ = **n.v.t.** **< 1**

$UC_{5-2} = N_{E;d} / N_{b;Rd} + k_{yy} \times (M_{y;Ed} + DM_{y;Ed}) / (C_{LT} \times M_{y;Rk})$ = **n.v.t.** **< 1**

6 - Check stress with combined buckling of two sections:

$UC_{5-1} = N_{E;d} / (C_{max;buc} \times N_{b;Rd})$ = **n.v.t.** **< 1**

$UC_{5-2} = N_{E;d} / N_{b;Rd} + k_{yy} \times (M_{y;Ed} + DM_{y;Ed}) / (C_{LT} \times M_{y;Rk})$ = **n.v.t.** **< 1**

7 - Check shear stress boltconnection:

$UC_7 = F_{v;Ed} / F_{v;Rd}$ = **0,36** **< 1**

8 - Check bearing stress boltconnection:

$UC_8 = F_{b;Ed} / F_{b;Rd}$ = **0,21** **< 1**

Remarks:

The maximum increase of stress or totalstress is(*2) : **$U.C_{max}$ = 0,88 = 88%**

(*1) Eventually, with the checks of the stresses, the cross-section reduction method is used according to prEN 1993-1-5.

(*2) The total stress or increase of stress has been related to the permissible stress.

Revision :	0	A	B	C	D	E	F
Date :	5-feb-2014						
Name :	M. Glegola						
Checked :	J. Hollaar						

Referentienr :	13039140509	**Berekening :**	B.14008
Project	: 150 kV lijn Leiden - Zoetermeer		
Part	: mast 52		

D&C ENGINEERING

Check equal leg angle-members according to Eurocode 3, prEN 1993-1-1 : 2003

File prEN 1993-1-1.revB.xls d.d. 2-32012, JG

Check section: *Vak 8* *diagonalen voor en achter vlak*

Memberforces : **(Attention! pressure = "-" and tension ="+")**

Compression:	N_{Sd}	=	*-158,6*	kN	***Combined forces diagonal:***			
Tension:	N_{Sd}	=	*198,3*	kN	$N_{comb1;c;s;d}$ (min. Compr. or tension)	=	*0*	kN
	$F_{perpend.;s;d}$	=	*0*	kN	$N_{comb2;c;s;d}$ (max. compression)	=	*0*	kN

Angle profile : *H120/80/8* (*1)

h	=	*120*	mm	I_y	=	*2256520*	mm^4
b	=	*80*	mm	$W_{y;el;eff.1}$	=	*22266*	mm^3
t_f	=	*8*	mm	$W_{y;el;eff.2}$	=	*120944*	mm^3
y_s	=	*18,7*	mm	i_y	=	*38,2*	mm
A_{bruto}	=	*1549*	mm^2	i_v	=	*17,2*	mm

Material :

Mat. qual. Fe360 / Fe510	=	*Fe360*		Permissible stress $f_{y;d}$	=	*235,0*	N/mm^2

Geometry section and bolts:

$L_{y;cr}$	=	*2030*	mm	No. bolts / end / flange	=	*6*	
$L_{v;cr}$	=	*2030*	mm	Type of bolts M / "	=	*24*	
$L_{tot\ (with\ comb.\ buckling)}$	=	*0*	mm	End distance bolt e1	=	*35*	mm
$a^*L_{tot\ (with\ comb.\ buckling)}$	=	*0*	mm	Centre-centre spacing bolt s1	=	*70*	mm
$L_{perpendicular\ force}$	=	*0*	mm	Edge distance bolt e2	=	*35*	mm
Position perpendicular force	=	*1*	(⌉=1, ⌋=2)	Boltquality 4.6/5.6/8.8/10.9	=	*4,6*	
Column profile?	=	*1*	no=1, yes=2	Rolled screw threads	=	*1*	
Thickness tie plate	=	*8*	mm	Dubble strap joint no=1, yes=2	=	*1*	

Summary checks :

1 - Check tension on member :

$UC_1 = N_{Ed} / N_{t.Rd}$ = **1,00** **< 1**

2 - Check perpendicular force on member :

$UC_2 = M_{Ed} / M_{c.Rd}$ = **n.v.t.** **< 1**

3 - Check of the member slenderness :

$UC_3 = C_{max;buc} / C_{perm}$ = **118** **< 200 or 240**

4 - Check stress in member due to compression without excentricity:

$UC_4 = N_{E;d} / (C_{max;buc} \times N_{b;Rd})$ = **0,94** **< 1**

5 - Check stress in member due to compression with excentricity:

$UC_{5-1} = N_{E;d} / (C_{max;buc} \times N_{b;Rd})$ = **n.v.t.** **< 1**

$UC_{5-2} = N_{E;d} / N_{b;Rd} + k_{yy} \times (M_{y;Ed} + DM_{y;Ed}) / (C_{LT} \times M_{y;Rk})$ = **n.v.t.** **< 1**

6 - Check stress with combined buckling of two sections:

$UC_{5-1} = N_{E;d} / (C_{max;buc} \times N_{b;Rd})$ = **n.v.t.** **< 1**

$UC_{5-2} = N_{E;d} / N_{b;Rd} + k_{yy} \times (M_{y;Ed} + DM_{y;Ed}) / (C_{LT} \times M_{y;Rk})$ = **n.v.t.** **< 1**

7 - Check shear stress boltconnection:

$UC_7 = F_{v;Ed} / F_{v;Rd}$ = **0,49** **< 1**

8 - Check bearing stress boltconnection:

$UC_8 = F_{b;Ed} / F_{b;Rd}$ = **0,64** **< 1**

Remarks:

The maximum increase of stress or totalstress is(*2) : **$U.C_{max}$ = 1,00 = 100%**

(*1) Eventually, with the checks of the stresses, the cross-section reduction method is used according to prEN 1993-1-5.

(*2) The total stress or increase of stress has been related to the permissible stress.

Revision :	0	A	B	C	D	E	F
Date :	5-feb-2014						
Name :	M. Glegola						
Checked :	J. Hollaar						

Referentienr :	13039140509	**Berekening :**	B.14008
Project	: 150 kV lijn Leiden - Zoetermeer		
Part	: mast 52		

D&C ENGINEERING

Check equal leg angle-members according to Eurocode 3, prEN 1993-1-1 : 2003

File prEN 1993-1-1.revB.xls d.d. 2-32012, JG

Check section: *Vak 8* *diagonalen zijvlak*

Memberforces : **(Attention! pressure = "-" and tension ="+")**

Compression:	N_{Sd}	=	*-25,8*	kN	***Combined forces diagonal:***			
Tension:	N_{Sd}	=	*31,7*	kN	$N_{comb1;c;s;d}$ (min. Compr. or tension)	=	*0*	kN
	$F_{perpend.;s;d}$	=	*0*	kN	$N_{comb2;c;s;d}$ (max. compression)	=	*0*	kN

Angle profile : *H70/70/5* (*1)

h	=	*70*	mm	I_y	=	*268391*	mm^4
b	=	*70*	mm	$W_{y;el;eff.1}$	=	*5609*	mm^3
t_f	=	*5*	mm	$W_{y;el;eff.2}$	=	*14898*	mm^3
y_s	=	*18,0*	mm	i_y	=	*20,3*	mm
A_{bruto}	=	*651*	mm^2	i_v	=	*13,0*	mm

Material :

Mat. qual. Fe360 / Fe510	=	*Fe360*		Permissible stress $f_{y;d}$	=	*235,0*	N/mm^2

Geometry section and bolts:

$L_{y;cr}$	=	*2366*	mm	No. bolts / end / flange	=	*1*	
$L_{v;cr}$	=	*2366*	mm	Type of bolts M / "	=	*20*	
$L_{tot\ (with\ comb.\ buckling)}$	=	*0*	mm	End distance bolt e1	=	*30*	mm
$a*L_{tot\ (with\ comb.\ buckling)}$	=	*0*	mm	Centre-centre spacing bolt s1	=	*70*	mm
$L_{perpendicular\ force}$	=	*0*	mm	Edge distance bolt e2	=	*35*	mm
Position perpendicular force	=	*1*	(⌉=1, ⌋=2)	Boltquality 4.6/5.6/8.8/10.9	=	*4,6*	
Column profile?	=	*1*	no=1, yes=2	Rolled screw threads	=	*1*	
Thickness tie plate	=	*8*	mm	Dubble strap joint no=1, yes=2	=	*1*	

Summary checks :

1 - Check tension on member :

$UC_1 = N_{Ed} / N_{t.Rd}$ = **0,46** **< 1**

2 - Check perpendicular force on member :

$UC_2 = M_{Ed} / M_{c.Rd}$ = **n.v.t.** **< 1**

3 - Check of the member slenderness :

$UC_3 = C_{max;buc} / C_{perm}$ = **182** **< 200 or 240**

4 - Check stress in member due to compression without excentricity:

$UC_4 = N_{E;d} / (C_{max;buc} \times N_{b;Rd})$ = **n.v.t.** **< 1**

5 - Check stress in member due to compression with excentricity:

$UC_{5-1} = N_{E;d} / (C_{max;buc} \times N_{b;Rd})$ = **0,76** **< 1**

$UC_{5-2} = N_{E;d} / N_{b;Rd} + k_{yy} \times (M_{y;Ed} + DM_{y;Ed}) / (C_{LT} \times M_{y;Rk})$ = **1,03** **> 1 !!**

6 - Check stress with combined buckling of two sections:

$UC_{5-1} = N_{E;d} / (C_{max;buc} \times N_{b;Rd})$ = **n.v.t.** **< 1**

$UC_{5-2} = N_{E;d} / N_{b;Rd} + k_{yy} \times (M_{y;Ed} + DM_{y;Ed}) / (C_{LT} \times M_{y;Rk})$ = **n.v.t.** **< 1**

7 - Check shear stress boltconnection:

$UC_7 = F_{v;Ed} / F_{v;Rd}$ = **0,67** **< 1**

8 - Check bearing stress boltconnection:

$UC_8 = F_{b;Ed} / F_{b;Rd}$ = **0,97** **< 1**

Remarks:

The maximum increase of stress or totalstress is(*2) : **$U.C_{max}$ = 1,03 = 103%**

(*1) Eventually, with the checks of the stresses, the cross-section reduction method is used according to prEN 1993-1-5.

(*2) The total stress or increase of stress has been related to the permissible stress.

Revision :	0	A	B	C	D	E	F
Date :	5-feb-2014						
Name :	M. Glegola						
Checked :	J. Hollaar						

Referentienr :	13039140509	**Berekening :**	B.14008
Project	: 150 kV lijn Leiden - Zoetermeer		
Part	: mast 52		

D&C ENGINEERING

Check equal leg angle-members according to Eurocode 3, prEN 1993-1-1 : 2003

File prEN 1993-1-1.revB.xls d.d. 2-32012, JG

Check section: *Vak 8 - diagonalen zijvlak* **verzwaard**

Memberforces : **(Attention! pressure = "-" and tension ="+")**

Compression:	N_{Sd}	=	*-25,8*	kN	***Combined forces diagonal:***			
Tension:	N_{Sd}	=	*31,7*	kN	$N_{comb1;c;s;d}$ (min. Compr. or tension)	=	*0*	kN
	$F_{perpend.;s;d}$	=	*0*	kN	$N_{comb2;c;s;d}$ (max. compression)	=	*0*	kN

Angle profile : *H70/70/8* (*1)

h	=	*70*	mm	I_y	=	*474882*	mm^4
b	=	*70*	mm	$W_{y;el;eff.1}$	=	*9522*	mm^3
t_f	=	*8*	mm	$W_{y;el;eff.2}$	=	*23596*	mm^3
y_s	=	*20,1*	mm	i_y	=	*21,1*	mm
A_{bruto}	=	*1065*	mm^2	i_v	=	*13,5*	mm

Material :

Mat. qual. Fe360 / Fe510	=	*Fe360*		Permissible stress $f_{y;d}$	=	*235,0*	N/mm^2

Geometry section and bolts:

$L_{y;cr}$	=	*2366*	mm	No. bolts / end / flange	=	*1*	
$L_{v;cr}$	=	*2366*	mm	Type of bolts M / "	=	*20*	
$L_{tot\ (with\ comb.\ buckling)}$	=	*0*	mm	End distance bolt e1	=	*30*	mm
$a^*L_{tot\ (with\ comb.\ buckling)}$	=	*0*	mm	Centre-centre spacing bolt s1	=	*70*	mm
$L_{perpendicular\ force}$	=	*0*	mm	Edge distance bolt e2	=	*35*	mm
Position perpendicular force	=	*1*	(⌉=1, ⌋=2)	Boltquality 4.6/5.6/8.8/10.9	=	*8,8*	
Column profile?	=	*1*	no=1, yes=2	Rolled screw threads	=	*1*	
Thickness tie plate	=	*8*	mm	Dubble strap joint no=1, yes=2	=	*1*	

Summary checks :

1 - Check tension on member :

$UC_1 = N_{Ed} / N_{t.Rd}$ = **0,29** **< 1**

2 - Check perpendicular force on member :

$UC_2 = M_{Ed} / M_{c.Rd}$ = **n.v.t.** **< 1**

3 - Check of the member slenderness :

$UC_3 = C_{max;buc} / C_{perm}$ = **176** **< 200 or 240**

4 - Check stress in member due to compression without excentricity:

$UC_4 = N_{E;d} / (C_{max;buc} \times N_{b;Rd})$ = **n.v.t.** **< 1**

5 - Check stress in member due to compression with excentricity:

$UC_{5-1} = N_{E;d} / (C_{max;buc} \times N_{b;Rd})$ = **0,44** **< 1**

$UC_{5-2} = N_{E;d} / N_{b;Rd} + k_{yy} \times (M_{y;Ed} + DM_{y;Ed}) / (C_{LT} \times M_{y;Rk})$ = **0,61** **< 1**

6 - Check stress with combined buckling of two sections:

$UC_{5-1} = N_{E;d} / (C_{max;buc} \times N_{b;Rd})$ = **n.v.t.** **< 1**

$UC_{5-2} = N_{E;d} / N_{b;Rd} + k_{yy} \times (M_{y;Ed} + DM_{y;Ed}) / (C_{LT} \times M_{y;Rk})$ = **n.v.t.** **< 1**

7 - Check shear stress boltconnection:

$UC_7 = F_{v;Ed} / F_{v;Rd}$ = **0,34** **< 1**

8 - Check bearing stress boltconnection:

$UC_8 = F_{b;Ed} / F_{b;Rd}$ = **0,60** **< 1**

Remarks:

The maximum increase of stress or totalstress is(*2) : **$U.C_{max}$ = 0,61 = 61%**

(*1) Eventually, with the checks of the stresses, the cross-section reduction method is used according to prEN 1993-1-5.

(*2) The total stress or increase of stress has been related to the permissible stress.

Revision :	0	A	B	C	D	E	F
Date :	5-feb-2014						
Name :	M. Glegola						
Checked :	J. Hollaar						

Referentienr :	13039140509	**Berekening :**	B.14008
Project	: 150 kV lijn Leiden - Zoetermeer		
Part	: mast 52		

D&C ENGINEERING

Check equal leg angle-members according to Eurocode 3, prEN 1993-1-1 : 2003

File prEN 1993-1-1.revB.xls d.d. 2-32012, JG

Check section: *Vak 8* *hor. knikverkorters voorvlak*

Memberforces : **(Attention! pressure = "-" and tension ="+")**

Compression:	N_{Sd}	=	*0,0*	kN	***Combined forces diagonal:***			
Tension:	N_{Sd}	=	*134,7*	kN	$N_{comb1;c;s;d}$ (min. Compr. or tension)	=	*0*	kN
	$F_{perpend.;s;d}$	=	*1,5*	kN	$N_{comb2;c;s;d}$ (max. compression)	=	*0*	kN

Angle profile : *H130/130/10* (*1)

h	=	*130*	mm	I_y	=	*3872340*	mm^4
b	=	*130*	mm	$W_{y;el;eff.1}$	=	*41938*	mm^3
t_f	=	*10*	mm	$W_{y;el;eff.2}$	=	*109995*	mm^3
y_s	=	*35,2*	mm	i_y	=	*39,4*	mm
A_{bruto}	=	*2493*	mm^2	i_v	=	*25,2*	mm

Material :

Mat. qual. Fe360 / Fe510	=	*Fe360*		Permissible stress $f_{y;d}$	=	*235,0*	N/mm^2

Geometry section and bolts:

$L_{y;cr}$	=	*888*	mm	No. bolts / end / flange	=	*4*	
$L_{v;cr}$	=	*888*	mm	Type of bolts M / "	=	*24*	
$L_{tot\ (with\ comb.\ buckling)}$	=	*0*	mm	End distance bolt e1	=	*35*	mm
$a*L_{tot\ (with\ comb.\ buckling)}$	=	*0*	mm	Centre-centre spacing bolt s1	=	*70*	mm
$L_{perpendicular\ force}$	=	*888*	mm	Edge distance bolt e2	=	*35*	mm
Position perpendicular force	=	*1*	(⌉=1, ⌋=2)	Boltquality 4.6/5.6/8.8/10.9	=	*4,6*	
Column profile?	=	*1*	no=1, yes=2	Rolled screw threads	=	*1*	
Thickness tie plate	=	*7*	mm	Dubble strap joint no=1, yes=2	=	*1*	

Summary checks :

1 - Check tension on member :

$UC_1 = N_{Ed} / N_{t.Rd}$ = **0,41** **< 1**

2 - Check perpendicular force on member :

$UC_2 = M_{Ed} / M_{c.Rd}$ = **0,03** **< 1**

3 - Check of the member slenderness :

$UC_3 = C_{max;buc} / C_{perm}$ = **35** **< 200 or 240**

4 - Check stress in member due to compression without excentricity:

$UC_4 = N_{E;d} / (C_{max;buc} \times N_{b;Rd})$ = **0,00** **< 1**

5 - Check stress in member due to compression with excentricity:

$UC_{5-1} = N_{E;d} / (C_{max;buc} \times N_{b;Rd})$ = **n.v.t.** **< 1**

$UC_{5-2} = N_{E;d} / N_{b;Rd} + k_{yy} \times (M_{y;Ed} + DM_{y;Ed}) / (C_{LT} \times M_{y;Rk})$ = **n.v.t.** **< 1**

6 - Check stress with combined buckling of two sections:

$UC_{5-1} = N_{E;d} / (C_{max;buc} \times N_{b;Rd})$ = **n.v.t.** **< 1**

$UC_{5-2} = N_{E;d} / N_{b;Rd} + k_{yy} \times (M_{y;Ed} + DM_{y;Ed}) / (C_{LT} \times M_{y;Rk})$ = **n.v.t.** **< 1**

7 - Check shear stress boltconnection:

$UC_7 = F_{v;Ed} / F_{v;Rd}$ = **0,50** **< 1**

8 - Check bearing stress boltconnection:

$UC_8 = F_{b;Ed} / F_{b;Rd}$ = **0,75** **< 1**

Remarks:

The maximum increase of stress or totalstress is(*2) : **$U.C_{max}$ = 0,75 = 75%**

(*1) Eventually, with the checks of the stresses, the cross-section reduction method is used according to prEN 1993-1-5.

(*2) The total stress or increase of stress has been related to the permissible stress.

Revision :	0	A	B	C	D	E	F
Date :	5-feb-2014						
Name :	M. Glegola						
Checked :	J. Hollaar						

Referentienr :	13039140509	**Berekening :**	B.14008
Project	: 150 kV lijn Leiden - Zoetermeer		
Part	: mast 52		

D&C ENGINEERING

Check equal leg angle-members according to Eurocode 3, prEN 1993-1-1 : 2003

File prEN 1993-1-1.revB.xls d.d. 2-32012, JG

Check section: *Vak 8* *hor. knikverkorters zijvlak*

Memberforces : **(Attention! pressure = "-" and tension ="+")**

Compression:	N_{Sd}	=	-22,7	kN	***Combined forces diagonal:***			
Tension:	N_{Sd}	=	0,0	kN	$N_{comb1;c;s;d}$ (min. Compr. or tension)	=	0	kN
	$F_{perpend.;s;d}$	=	1,5	kN	$N_{comb2;c;s;d}$ (max. compression)	=	0	kN

Angle profile : *H50/40/5* (*1)

h	=	50	mm	I_y	=	103800	mm^4
b	=	40	mm	$W_{y;el;eff.1}$	=	2638	mm^3
t_f	=	5	mm	$W_{y;el;eff.2}$	=	9746	mm^3
y_s	=	10,7	mm	i_y	=	15,6	mm
A_{bruto}	=	427	mm^2	i_v	=	8,4	mm

Material :

Mat. qual. Fe360 / Fe510	=	Fe360		Permissible stress $f_{y;d}$	=	235,0	N/mm^2

Geometry section and bolts:

$L_{y;cr}$	=	1616	mm	No. bolts / end / flange	=	1	
$L_{v;cr}$	=	1616	mm	Type of bolts M / "	=	16	
$L_{tot\ (with\ comb.\ buckling)}$	=	0	mm	End distance bolt e1	=	35	mm
$a^*L_{tot\ (with\ comb.\ buckling)}$	=	0	mm	Centre-centre spacing bolt s1	=	70	mm
$L_{perpendicular\ force}$	=	1616	mm	Edge distance bolt e2	=	35	mm
Position perpendicular force	=	1	(⌉=1, ⌋=2)	Boltquality 4.6/5.6/8.8/10.9	=	4,6	
Column profile?	=	1	no=1, yes=2	Rolled screw threads	=	1	
Thickness tie plate	=	7	mm	Dubble strap joint no=1, yes=2	=	1	

Summary checks :

1 - Check tension on member :

$UC_1 = N_{Ed} / N_{t.Rd}$ = **0,00** **< 1**

2 - Check perpendicular force on member :

$UC_2 = M_{Ed} / M_{c.Rd}$ = **0,98** **< 1**

3 - Check of the member slenderness :

$UC_3 = C_{max;buc} / C_{perm}$ = **192** **< 200 or 240**

4 - Check stress in member due to compression without excentricity:

$UC_4 = N_{E;d} / (C_{max;buc} \times N_{b;Rd})$ = **n.v.t.** **< 1**

5 - Check stress in member due to compression with excentricity:

$UC_{5-1} = N_{E;d} / (C_{max;buc} \times N_{b;Rd})$ = **1,13** **> 1 !!**

$UC_{5-2} = N_{E;d} / N_{b;Rd} + k_{yy} \times (M_{y;Ed} + DM_{y;Ed}) / (C_{LT} \times M_{y;Rk})$ = **1,35** **> 1 !!**

6 - Check stress with combined buckling of two sections:

$UC_{5-1} = N_{E;d} / (C_{max;buc} \times N_{b;Rd})$ = **n.v.t.** **< 1**

$UC_{5-2} = N_{E;d} / N_{b;Rd} + k_{yy} \times (M_{y;Ed} + DM_{y;Ed}) / (C_{LT} \times M_{y;Rk})$ = **n.v.t.** **< 1**

7 - Check shear stress boltconnection:

$UC_7 = F_{v;Ed} / F_{v;Rd}$ = **0,75** **< 1**

8 - Check bearing stress boltconnection:

$UC_8 = F_{b;Ed} / F_{b;Rd}$ = **0,39** **< 1**

Remarks:

The maximum increase of stress or totalstress is(*2) : **$U.C_{max}$ = 1,35 = 135%**

(*1) Eventually, with the checks of the stresses, the cross-section reduction method is used according to prEN 1993-1-5.

(*2) The total stress or increase of stress has been related to the permissible stress.

Revision :	0	A	B	C	D	E	F
Date :	5-feb-2014						
Name :	M. Glegola						
Checked :	J. Hollaar						

Referentienr :	13039140509	**Berekening :**	B.14008
Project	: 150 kV lijn Leiden - Zoetermeer		
Part	: mast 52		

D&C ENGINEERING

Check equal leg angle-members according to Eurocode 3, prEN 1993-1-1 : 2003

File prEN 1993-1-1.revB.xls d.d. 2-32012, JG

Check section: *Vak 8* *hor. knikverkorters zijvlak*

Memberforces : **(Attention! pressure = "-" and tension ="+")**

Compression:	N_{Sd}	=	-22,7	kN	***Combined forces diagonal:***			
Tension:	N_{Sd}	=	5,5	kN	$N_{comb1;c;s;d}$ (min. Compr. or tension)	=	0	kN
	$F_{perpend.;s;d}$	=	1,5	kN	$N_{comb2;c;s;d}$ (max. compression)	=	0	kN

Angle profile : H50/50/8 (*1)

h	=	50	mm	I_y	=	162828	mm^4
b	=	50	mm	$W_{y;el;eff.1}$	=	4684	mm^3
t_f	=	8	mm	$W_{y;el;eff.2}$	=	10685	mm^3
y_s	=	15,2	mm	i_y	=	14,8	mm
A_{bruto}	=	741	mm^2	i_v	=	9,6	mm

Material :

Mat. qual. Fe360 / Fe510	=	Fe360		Permissible stress $f_{y;d}$	=	235,0	N/mm^2

Geometry section and bolts:

$L_{y;cr}$	=	1616	mm	No. bolts / end / flange	=	1	
$L_{v;cr}$	=	1616	mm	Type of bolts M / "	=	16	
$L_{tot\ (with\ comb.\ buckling)}$	=	0	mm	End distance bolt e1	=	35	mm
$a^*L_{tot\ (with\ comb.\ buckling)}$	=	0	mm	Centre-centre spacing bolt s1	=	70	mm
$L_{perpendicular\ force}$	=	1616	mm	Edge distance bolt e2	=	35	mm
Position perpendicular force	=	1	(⌉=1, ⌋=2)	Boltquality 4.6/5.6/8.8/10.9	=	8,8	
Column profile?	=	1	no=1, yes=2	Rolled screw threads	=	1	
Thickness tie plate	=	7	mm	Dubble strap joint no=1, yes=2	=	1	

Summary checks :

1 - Check tension on member :

$UC_1 = N_{Ed} / N_{t.Rd}$ = **0,05** **< 1**

2 - Check perpendicular force on member :

$UC_2 = M_{Ed} / M_{c.Rd}$ = **0,55** **< 1**

3 - Check of the member slenderness :

$UC_3 = C_{max;buc} / C_{perm}$ = **169** **< 200 or 240**

4 - Check stress in member due to compression without excentricity:

$UC_4 = N_{E;d} / (C_{max;buc} \times N_{b;Rd})$ = **n.v.t.** **< 1**

5 - Check stress in member due to compression with excentricity:

$UC_{5-1} = N_{E;d} / (C_{max;buc} \times N_{b;Rd})$ = **0,51** **< 1**

$UC_{5-2} = N_{E;d} / N_{b;Rd} + k_{yy} \times (M_{y;Ed} + DM_{y;Ed}) / (C_{LT} \times M_{y;Rk})$ = **0,76** **< 1**

6 - Check stress with combined buckling of two sections:

$UC_{5-1} = N_{E;d} / (C_{max;buc} \times N_{b;Rd})$ = **n.v.t.** **< 1**

$UC_{5-2} = N_{E;d} / N_{b;Rd} + k_{yy} \times (M_{y;Ed} + DM_{y;Ed}) / (C_{LT} \times M_{y;Rk})$ = **n.v.t.** **< 1**

7 - Check shear stress boltconnection:

$UC_7 = F_{v;Ed} / F_{v;Rd}$ = **0,38** **< 1**

8 - Check bearing stress boltconnection:

$UC_8 = F_{b;Ed} / F_{b;Rd}$ = **0,28** **< 1**

Remarks:

The maximum increase of stress or totalstress is(*2) : **$U.C_{max}$ = 0,76 = 76%**

(*1) Eventually, with the checks of the stresses, the cross-section reduction method is used according to prEN 1993-1-5.

(*2) The total stress or increase of stress has been related to the permissible stress.

Revision :	0	A	B	C	D	E	F
Date :	5-feb-2014						
Name :	M. Glegola						
Checked :	J. Hollaar						

Referentienr :	13039140509	**Berekening :**	B.14008
Project	: 150 kV lijn Leiden - Zoetermeer		
Part	: mast 52		

D&C ENGINEERING

Check equal leg angle-members according to Eurocode 3, prEN 1993-1-1 : 2003

File prEN 1993-1-1.revB.xls d.d. 2-32012, JG

Check section: *Vak 8* *schuine knikverkorters voorvlak*

Memberforces : **(Attention! pressure = "-" and tension ="+")**

Compression:	N_{Sd}	=	*-208,83*	kN	***Combined forces diagonal:***			
Tension:	N_{Sd}	=	*183,27*	kN	$N_{comb1;c;s;d}$ (min. Compr. or tension)	=	*0*	kN
	$F_{perpend.;s;d}$	=	*0*	kN	$N_{comb2;c;s;d}$ (max. compression)	=	*0*	kN

Angle profile : *H120/80/8* (*1)

h	=	*120*	mm	I_y	=	*2256520*	mm^4
b	=	*80*	mm	$W_{y;el;eff.1}$	=	*22266*	mm^3
t_f	=	*8*	mm	$W_{y;el;eff.2}$	=	*120944*	mm^3
y_s	=	*18,7*	mm	i_y	=	*38,2*	mm
A_{bruto}	=	*1549*	mm^2	i_v	=	*17,2*	mm

Material :

Mat. qual. Fe360 / Fe510	=	*Fe360*		Permissible stress $f_{y;d}$	=	*235,0*	N/mm^2

Geometry section and bolts:

$L_{y;cr}$	=	*1544*	mm	No. bolts / end / flange	=	*5*	
$L_{v;cr}$	=	*1544*	mm	Type of bolts M / "	=	*24*	
$L_{tot\ (with\ comb.\ buckling)}$	=	*0*	mm	End distance bolt e1	=	*35*	mm
$a^*L_{tot\ (with\ comb.\ buckling)}$	=	*0*	mm	Centre-centre spacing bolt s1	=	*70*	mm
$L_{perpendicular\ force}$	=	*0*	mm	Edge distance bolt e2	=	*35*	mm
Position perpendicular force	=	*1*	(⌉=1, ⌋=2)	Boltquality 4.6/5.6/8.8/10.9	=	*4,6*	
Column profile?	=	*1*	no=1, yes=2	Rolled screw threads	=	*1*	
Thickness tie plate	=	*7*	mm	Dubble strap joint no=1, yes=2	=	*1*	

Summary checks :

1 - Check tension on member :

$UC_1 = N_{Ed} / N_{t.Rd}$ = **0,92** **< 1**

2 - Check perpendicular force on member :

$UC_2 = M_{Ed} / M_{c.Rd}$ = **n.v.t.** **< 1**

3 - Check of the member slenderness :

$UC_3 = C_{max;buc} / C_{perm}$ = **90** **< 200 or 240**

4 - Check stress in member due to compression without excentricity:

$UC_4 = N_{E;d} / (C_{max;buc} \times N_{b;Rd})$ = **0,92** **< 1**

5 - Check stress in member due to compression with excentricity:

$UC_{5-1} = N_{E;d} / (C_{max;buc} \times N_{b;Rd})$ = **n.v.t.** **< 1**

$UC_{5-2} = N_{E;d} / N_{b;Rd} + k_{yy} \times (M_{y;Ed} + DM_{y;Ed}) / (C_{LT} \times M_{y;Rk})$ = **n.v.t.** **< 1**

6 - Check stress with combined buckling of two sections:

$UC_{5-1} = N_{E;d} / (C_{max;buc} \times N_{b;Rd})$ = **n.v.t.** **< 1**

$UC_{5-2} = N_{E;d} / N_{b;Rd} + k_{yy} \times (M_{y;Ed} + DM_{y;Ed}) / (C_{LT} \times M_{y;Rk})$ = **n.v.t.** **< 1**

7 - Check shear stress boltconnection:

$UC_7 = F_{v;Ed} / F_{v;Rd}$ = **0,62** **< 1**

8 - Check bearing stress boltconnection:

$UC_8 = F_{b;Ed} / F_{b;Rd}$ = **0,82** **< 1**

Remarks:

The maximum increase of stress or totalstress is(*2) : **$U.C_{max}$ = 0,92 = 92%**

(*1) Eventually, with the checks of the stresses, the cross-section reduction method is used according to prEN 1993-1-5.

(*2) The total stress or increase of stress has been related to the permissible stress.

Revision :	0	A	B	C	D	E	F
Date :	5-feb-2014						
Name :	M. Glegola						
Checked :	J. Hollaar						

Referentienr :	13039140509	**Berekening :**	B.14008
Project	: 150 kV lijn Leiden - Zoetermeer		
Part	: mast 52		

D&C ENGINEERING

Check equal leg angle-members according to Eurocode 3, prEN 1993-1-1 : 2003

File prEN 1993-1-1.revB.xls d.d. 2-32012, JG

Check section: *Vak 9* *bovenrand*

Memberforces : **(Attention! pressure = "-" and tension ="+")**

Compression:	N_{Sd}	=	*-158,3*	kN	***Combined forces diagonal:***			
Tension:	N_{Sd}	=	*303,4*	kN	$N_{comb1;c;s;d}$ (min. Compr. or tension)	=	*0*	kN
	$F_{perpend.;s;d}$	=	*0*	kN	$N_{comb2;c;s;d}$ (max. compression)	=	*0*	kN

Angle profile : *H130/130/12* (*1)

h	=	*130*	mm	I_y	=	*4721746*	mm^4
b	=	*130*	mm	$W_{y;el;eff.1}$	=	*50442*	mm^3
t_f	=	*12*	mm	$W_{y;el;eff.2}$	=	*129742*	mm^3
y_s	=	*36,4*	mm	i_y	=	*39,7*	mm
A_{bruto}	=	*2997*	mm^2	i_v	=	*25,2*	mm

Material :

Mat. qual. Fe360 / Fe510	=	*Fe360*		Permissible stress $f_{y;d}$	=	*235,0*	N/mm^2

Geometry section and bolts:

$L_{y;cr}$	=	*3202*	mm	No. bolts / end / flange	=	*0*	
$L_{v;cr}$	=	*3202*	mm				
$L_{tot\ (with\ comb.\ buckling)}$	=	*0*	mm				mm
$a^*L_{tot\ (with\ comb.\ buckling)}$	=	*0*	mm				mm
$L_{perpendicular\ force}$	=	*0*	mm				mm
Position perpendicular force	=	*1*	(⌉=1, ⌋=2)				
Column profile?	=	*1*	no=1, yes=2				

Summary checks :

Only the stresses in the sections has to be checked.

1 - Check tension on member :

$UC_1 = N_{Ed} / N_{t.Rd}$ = **0,43** **< 1**

2 - Check perpendicular force on member :

$UC_2 = M_{Ed} / M_{c.Rd}$ = **n.v.t.** **< 1**

3 - Check of the member slenderness :

$UC_3 = C_{max;buc} / C_{perm}$ = **127** **< 200 or 240**

4 - Check stress in member due to compression without excentricity:

$UC_4 = N_{E;d} / (C_{max;buc} \times N_{b;Rd})$ = **0,52** **< 1**

5 - Check stress in member due to compression with excentricity:

$UC_{5-1} = N_{E;d} / (C_{max;buc} \times N_{b;Rd})$ = **n.v.t.** **< 1**

$UC_{5-2} = N_{E;d} / N_{b;Rd} + k_{yy} \times (M_{y;Ed} + DM_{y;Ed}) / (C_{LT} \times M_{y;Rk})$ = **n.v.t.** **< 1**

6 - Check stress with combined buckling of two sections:

$UC_{5-1} = N_{E;d} / (C_{max;buc} \times N_{b;Rd})$ = **n.v.t.** **< 1**

$UC_{5-2} = N_{E;d} / N_{b;Rd} + k_{yy} \times (M_{y;Ed} + DM_{y;Ed}) / (C_{LT} \times M_{y;Rk})$ = **n.v.t.** **< 1**

7 - Check shear stress boltconnection:

$UC_7 = F_{v;Ed} / F_{v;Rd}$ = **n.v.t.** **< 1**

8 - Check bearing stress boltconnection:

$UC_8 = F_{b;Ed} / F_{b;Rd}$ = **n.v.t.** **< 1**

Remarks:

The maximum increase of stress or totalstress is(*2) : **$U.C_{max}$ = 0,52 = 52%**

(*1) Eventually, with the checks of the stresses, the cross-section reduction method is used according to prEN 1993-1-5.

(*2) The total stress or increase of stress has been related to the permissible stress.

Revision :	0	A	B	C	D	E	F
Date :	5-feb-2014						
Name :	M. Glegola						
Checked :	J. Hollaar						

Referentienr :	13039140509	**Berekening :**	B.14008
Project	: 150 kV lijn Leiden - Zoetermeer		
Part	: mast 52		

D&C ENGINEERING

Check equal leg angle-members according to Eurocode 3, prEN 1993-1-1 : 2003

File prEN 1993-1-1.revB.xls d.d. 2-32012, JG

Check section: *Vak 9* *diagonalen voor-en achtervlak*

Memberforces : **(Attention! pressure = "-" and tension ="+")**

Compression:	N_{Sd}	=	*-135,5*	kN	***Combined forces diagonal:***			
Tension:	N_{Sd}	=	*155,0*	kN	$N_{comb1;c;s;d}$ (min. Compr. or tension)	=	*0*	kN
	$F_{perpend.;s;d}$	=	*0*	kN	$N_{comb2;c;s;d}$ (max. compression)	=	*0*	kN

Angle profile : *H100/100/8* (*1)

h	=	*100*	mm	I_y	=	*1448424*	mm^4
b	=	*100*	mm	$W_{y;el;eff.1}$	=	*19942*	mm^3
t_f	=	*8*	mm	$W_{y;el;eff.2}$	=	*52924*	mm^3
y_s	=	*27,4*	mm	i_y	=	*30,6*	mm
A_{bruto}	=	*1551*	mm^2	i_v	=	*19,4*	mm

Material :

Mat. qual. Fe360 / Fe510	=	*Fe360*		Permissible stress $f_{y;d}$	=	*235,0*	N/mm^2

Geometry section and bolts:

$L_{y;cr}$	=	*2373*	mm	No. bolts / end / flange	=	*3*	
$L_{v;cr}$	=	*2373*	mm	Type of bolts M / "	=	*24*	
$L_{tot\ (with\ comb.\ buckling)}$	=	*0*	mm	End distance bolt e1	=	*40*	mm
$a*L_{tot\ (with\ comb.\ buckling)}$	=	*0*	mm	Centre-centre spacing bolt s1	=	*80*	mm
$L_{perpendicular\ force}$	=	*0*	mm	Edge distance bolt e2	=	*35*	mm
Position perpendicular force	=	*1*	(⌉=1, ⌋=2)	Boltquality 4.6/5.6/8.8/10.9	=	*4,6*	
Column profile?	=	*1*	no=1, yes=2	Rolled screw threads	=	*1*	
Thickness tie plate	=	*10*	mm	Dubble strap joint no=1, yes=2	=	*1*	

Summary checks :

1 - Check tension on member :

$UC_1 = N_{Ed} / N_{t.Rd}$ = **0,73** **< 1**

2 - Check perpendicular force on member :

$UC_2 = M_{Ed} / M_{c.Rd}$ = **n.v.t.** **< 1**

3 - Check of the member slenderness :

$UC_3 = C_{max;buc} / C_{perm}$ = **123** **< 200 or 240**

4 - Check stress in member due to compression without excentricity:

$UC_4 = N_{E;d} / (C_{max;buc} \times N_{b;Rd})$ = **0,84** **< 1**

5 - Check stress in member due to compression with excentricity:

$UC_{5-1} = N_{E;d} / (C_{max;buc} \times N_{b;Rd})$ = **n.v.t.** **< 1**

$UC_{5-2} = N_{E;d} / N_{b;Rd} + k_{yy} \times (M_{y;Ed} + DM_{y;Ed}) / (C_{LT} \times M_{y;Rk})$ = **n.v.t.** **< 1**

6 - Check stress with combined buckling of two sections:

$UC_{5-1} = N_{E;d} / (C_{max;buc} \times N_{b;Rd})$ = **n.v.t.** **< 1**

$UC_{5-2} = N_{E;d} / N_{b;Rd} + k_{yy} \times (M_{y;Ed} + DM_{y;Ed}) / (C_{LT} \times M_{y;Rk})$ = **n.v.t.** **< 1**

7 - Check shear stress boltconnection:

$UC_7 = F_{v;Ed} / F_{v;Rd}$ = **0,76** **< 1**

8 - Check bearing stress boltconnection:

$UC_8 = F_{b;Ed} / F_{b;Rd}$ = **0,88** **< 1**

Remarks:

The maximum increase of stress or totalstress is(*2) : **$U.C_{max}$ = 0,88 = 88%**

(*1) Eventually, with the checks of the stresses, the cross-section reduction method is used according to prEN 1993-1-5.

(*2) The total stress or increase of stress has been related to the permissible stress.

Revision :	0	A	B	C	D	E	F
Date :	5-feb-2014						
Name :	M. Glegola						
Checked :	J. Hollaar						

Referentienr :	13039140509	**Berekening :**	B.14008
Project	: 150 kV lijn Leiden - Zoetermeer		
Part	: mast 52		

D&C ENGINEERING

Check equal leg angle-members according to Eurocode 3, prEN 1993-1-1 : 2003

File prEN 1993-1-1.revB.xls d.d. 2-32012, JG

Check section: *Vak 9* *diagonalen voor-en achtervlak*

Memberforces : **(Attention! pressure = "-" and tension ="+")**

Compression:	N_{Sd}	=	*-155,2*	kN	***Combined forces diagonal:***			
Tension:	N_{Sd}	=	*129,5*	kN	$N_{comb1;c;s;d}$ (min. Compr. or tension)	=	*0*	kN
	$F_{perpend.;s;d}$	=	*0*	kN	$N_{comb2;c;s;d}$ (max. compression)	=	*0*	kN

Angle profile : *H120/120/8* (*1)

h	=	*120*	mm	I_y	=	*1911566*	mm^4
b	=	*120*	mm	$W_{y;el;eff.1}$	=	*24300*	mm^3
t_f	=	*8*	mm	$W_{y;el;eff.2}$	=	*64520*	mm^3
y_s	=	*29,6*	mm	i_y	=	*33,5*	mm
A_{bruto}	=	*1705*	mm^2	i_v	=	*21,4*	mm

Material :

Mat. qual. Fe360 / Fe510	=	*Fe360*		Permissible stress $f_{y;d}$	=	*235,0*	N/mm^2

Geometry section and bolts:

$L_{y;cr}$	=	*2373*	mm	No. bolts / end / flange	=	*3*	
$L_{v;cr}$	=	*2373*	mm	Type of bolts M / "	=	*24*	
$L_{tot\ (with\ comb.\ buckling)}$	=	*0*	mm	End distance bolt e1	=	*35*	mm
$a^*L_{tot\ (with\ comb.\ buckling)}$	=	*0*	mm	Centre-centre spacing bolt s1	=	*70*	mm
$L_{perpendicular\ force}$	=	*0*	mm	Edge distance bolt e2	=	*35*	mm
Position perpendicular force	=	*1*	(⌉=1, ⌋=2)	Boltquality 4.6/5.6/8.8/10.9	=	*4,6*	
Column profile?	=	*1*	no=1, yes=2	Rolled screw threads	=	*1*	
Thickness tie plate	=	*10*	mm	Dubble strap joint no=1, yes=2	=	*1*	

Summary checks :

1 - Check tension on member :

$UC_1 = N_{Ed} / N_{t.Rd}$ = **0,58** **< 1**

2 - Check perpendicular force on member :

$UC_2 = M_{Ed} / M_{c.Rd}$ = **n.v.t.** **< 1**

3 - Check of the member slenderness :

$UC_3 = C_{max;buc} / C_{perm}$ = **111** **< 200 or 240**

4 - Check stress in member due to compression without excentricity:

$UC_4 = N_{E;d} / (C_{max;buc} \times N_{b;Rd})$ = **0,79** **< 1**

5 - Check stress in member due to compression with excentricity:

$UC_{5-1} = N_{E;d} / (C_{max;buc} \times N_{b;Rd})$ = **n.v.t.** **< 1**

$UC_{5-2} = N_{E;d} / N_{b;Rd} + k_{yy} \times (M_{y;Ed} + DM_{y;Ed}) / (C_{LT} \times M_{y;Rk})$ = **n.v.t.** **< 1**

6 - Check stress with combined buckling of two sections:

$UC_{5-1} = N_{E;d} / (C_{max;buc} \times N_{b;Rd})$ = **n.v.t.** **< 1**

$UC_{5-2} = N_{E;d} / N_{b;Rd} + k_{yy} \times (M_{y;Ed} + DM_{y;Ed}) / (C_{LT} \times M_{y;Rk})$ = **n.v.t.** **< 1**

7 - Check shear stress boltconnection:

$UC_7 = F_{v;Ed} / F_{v;Rd}$ = **0,76** **< 1**

8 - Check bearing stress boltconnection:

$UC_8 = F_{b;Ed} / F_{b;Rd}$ = **0,84** **< 1**

Remarks:

The maximum increase of stress or totalstress is(*2) : **$U.C_{max}$ = 0,84 = 84%**

(*1) Eventually, with the checks of the stresses, the cross-section reduction method is used according to prEN 1993-1-5.

(*2) The total stress or increase of stress has been related to the permissible stress.

Revision :	0	A	B	C	D	E	F
Date :	5-feb-2014						
Name :	M. Glegola						
Checked :	J. Hollaar						

Referentienr :	13039140509	**Berekening :**	B.14008
Project	: 150 kV lijn Leiden - Zoetermeer		
Part	: mast 52		

D&C ENGINEERING

Check equal leg angle-members according to Eurocode 3, prEN 1993-1-1 : 2003

File prEN 1993-1-1.revB.xls d.d. 2-32012, JG

Check section: *Vak 9* *verticalen*

Memberforces : **(Attention! pressure = "-" and tension ="+")**

Compression:	N_{Sd}	=	-3,0	kN	***Combined forces diagonal:***			
Tension:	N_{Sd}	=	3,5	kN	$N_{comb1;c;s;d}$ (min. Compr. or tension)	=	0	kN
	$F_{perpend.;s;d}$	=	0	kN	$N_{comb2;c;s;d}$ (max. compression)	=	0	kN

Angle profile : *H50/50/5* (*1)

h	=	50	mm	I_y	=	109643	mm^4
b	=	50	mm	$W_{y;el;eff.1}$	=	3049	mm^3
t_f	=	5	mm	$W_{y;el;eff.2}$	=	7811	mm^3
y_s	=	14,0	mm	i_y	=	15,1	mm
A_{bruto}	=	480	mm^2	i_v	=	9,6	mm

Material :

Mat. qual. Fe360 / Fe510	=	Fe360		Permissible stress $f_{y;d}$	=	235,0	N/mm^2

Geometry section and bolts:

$L_{y;cr}$	=	1503	mm	No. bolts / end / flange	=	1	
$L_{v;cr}$	=	1503	mm	Type of bolts M / "	=	16	
$L_{tot\ (with\ comb.\ buckling)}$	=	0	mm	End distance bolt e1	=	25	mm
$a^*L_{tot\ (with\ comb.\ buckling)}$	=	0	mm	Centre-centre spacing bolt s1	=	80	mm
$L_{perpendicular\ force}$	=	0	mm	Edge distance bolt e2	=	35	mm
Position perpendicular force	=	1	(⌉=1, ⌋=2)	Boltquality 4.6/5.6/8.8/10.9	=	4,6	
Column profile?	=	1	no=1, yes=2	Rolled screw threads	=	1	
Thickness tie plate	=	8	mm	Dubble strap joint no=1, yes=2	=	1	

Summary checks :

1 - Check tension on member :

$UC_1 = N_{Ed} / N_{t.Rd}$ = **0,05** **< 1**

2 - Check perpendicular force on member :

$UC_2 = M_{Ed} / M_{c.Rd}$ = **n.v.t.** **< 1**

3 - Check of the member slenderness :

$UC_3 = C_{max;buc} / C_{perm}$ = **156** **< 200 or 240**

4 - Check stress in member due to compression without excentricity:

$UC_4 = N_{E;d} / (C_{max;buc} \times N_{b;Rd})$ = **n.v.t.** **< 1**

5 - Check stress in member due to compression with excentricity:

$UC_{5-1} = N_{E;d} / (C_{max;buc} \times N_{b;Rd})$ = **0,09** **< 1**

$UC_{5-2} = N_{E;d} / N_{b;Rd} + k_{yy} \times (M_{y;Ed} + DM_{y;Ed}) / (C_{LT} \times M_{y;Rk})$ = **0,13** **< 1**

6 - Check stress with combined buckling of two sections:

$UC_{5-1} = N_{E;d} / (C_{max;buc} \times N_{b;Rd})$ = **n.v.t.** **< 1**

$UC_{5-2} = N_{E;d} / N_{b;Rd} + k_{yy} \times (M_{y;Ed} + DM_{y;Ed}) / (C_{LT} \times M_{y;Rk})$ = **n.v.t.** **< 1**

7 - Check shear stress boltconnection:

$UC_7 = F_{v;Ed} / F_{v;Rd}$ = **0,12** **< 1**

8 - Check bearing stress boltconnection:

$UC_8 = F_{b;Ed} / F_{b;Rd}$ = **0,13** **< 1**

Remarks:

The maximum increase of stress or totalstress is(*2) : **$U.C_{max}$ = 0,13 = 13%**

(*1) Eventually, with the checks of the stresses, the cross-section reduction method is used according to prEN 1993-1-5.

(*2) The total stress or increase of stress has been related to the permissible stress.

Revision :	0	A	B	C	D	E	F
Date :	5-feb-2014						
Name :	M. Glegola						
Checked :	J. Hollaar						

Referentienr :	13039140509	**Berekening :**	B.14008
Project	: 150 kV lijn Leiden - Zoetermeer		
Part	: mast 52		

D&C ENGINEERING

Check equal leg angle-members according to Eurocode 3, prEN 1993-1-1 : 2003

File prEN 1993-1-1.revB.xls d.d. 2-32012, JG

Check section: *Vak 9* *diagonalen ondervlak*

Memberforces : **(Attention! pressure = "-" and tension ="+")**

Compression:	N_{Sd}	=	*-18,0*	kN	***Combined forces diagonal:***			
Tension:	N_{Sd}	=	*15,7*	kN	$N_{comb1;c;s;d}$ (min. Compr. or tension)	=	*0*	kN
	$F_{perpend.;s;d}$	=	*0*	kN	$N_{comb2;c;s;d}$ (max. compression)	=	*0*	kN

Angle profile : *H75/75/6* (*1)

h	=	*75*	mm	I_y	=	*455710*	mm^4
b	=	*75*	mm	$W_{y;el;eff.1}$	=	*8351*	mm^3
t_f	=	*6*	mm	$W_{y;el;eff.2}$	=	*22305*	mm^3
y_s	=	*20,4*	mm	i_y	=	*22,8*	mm
A_{bruto}	=	*875*	mm^2	i_v	=	*14,5*	mm

Material :

Mat. qual. Fe360 / Fe510	=	*Fe360*		Permissible stress $f_{y;d}$	=	*235,0*	N/mm^2

Geometry section and bolts:

$L_{y;cr}$	=	*2456*	mm	No. bolts / end / flange	=	*1*	
$L_{v;cr}$	=	*2456*	mm	Type of bolts M / "	=	*20*	
$L_{tot\ (with\ comb.\ buckling)}$	=	*0*	mm	End distance bolt e1	=	*30*	mm
$a^*L_{tot\ (with\ comb.\ buckling)}$	=	*0*	mm	Centre-centre spacing bolt s1	=	*80*	mm
$L_{perpendicular\ force}$	=	*0*	mm	Edge distance bolt e2	=	*35*	mm
Position perpendicular force	=	*1*	(⌉=1, ⌋=2)	Boltquality 4.6/5.6/8.8/10.9	=	*4,6*	
Column profile?	=	*1*	no=1, yes=2	Rolled screw threads	=	*1*	
Thickness tie plate	=	*8*	mm	Dubble strap joint no=1, yes=2	=	*1*	

Summary checks :

1 - Check tension on member :

$UC_1 = N_{Ed} / N_{t.Rd}$ = **0,19** **< 1**

2 - Check perpendicular force on member :

$UC_2 = M_{Ed} / M_{c.Rd}$ = **n.v.t.** **< 1**

3 - Check of the member slenderness :

$UC_3 = C_{max;buc} / C_{perm}$ = **170** **< 200 or 240**

4 - Check stress in member due to compression without excentricity:

$UC_4 = N_{E;d} / (C_{max;buc} \times N_{b;Rd})$ = **n.v.t.** **< 1**

5 - Check stress in member due to compression with excentricity:

$UC_{5-1} = N_{E;d} / (C_{max;buc} \times N_{b;Rd})$ = **0,35** **< 1**

$UC_{5-2} = N_{E;d} / N_{b;Rd} + k_{yy} \times (M_{y;Ed} + DM_{y;Ed}) / (C_{LT} \times M_{y;Rk})$ = **0,49** **< 1**

6 - Check stress with combined buckling of two sections:

$UC_{5-1} = N_{E;d} / (C_{max;buc} \times N_{b;Rd})$ = **n.v.t.** **< 1**

$UC_{5-2} = N_{E;d} / N_{b;Rd} + k_{yy} \times (M_{y;Ed} + DM_{y;Ed}) / (C_{LT} \times M_{y;Rk})$ = **n.v.t.** **< 1**

7 - Check shear stress boltconnection:

$UC_7 = F_{v;Ed} / F_{v;Rd}$ = **0,38** **< 1**

8 - Check bearing stress boltconnection:

$UC_8 = F_{b;Ed} / F_{b;Rd}$ = **0,40** **< 1**

Remarks:

The maximum increase of stress or totalstress is(*2) : **$U.C_{max}$ = 0,49 = 49%**

(*1) Eventually, with the checks of the stresses, the cross-section reduction method is used according to prEN 1993-1-5.

(*2) The total stress or increase of stress has been related to the permissible stress.

Revision :	0	A	B	C	D	E	F
Date :	5-feb-2014						
Name :	M. Glegola						
Checked :	J. Hollaar						

Referentienr :	13039140509	**Berekening :**	B.14008
Project	: 150 kV lijn Leiden - Zoetermeer		
Part	: mast 52		

D&C ENGINEERING

Check equal leg angle-members according to Eurocode 3, prEN 1993-1-1 : 2003

File prEN 1993-1-1.revB.xls d.d. 2-32012, JG

Check section: *Vak 10* *randen*

Memberforces : **(Attention! pressure = "-" and tension ="+")**

Compression:	N_{Sd}	=	-87,4	kN	***Combined forces diagonal:***			
Tension:	N_{Sd}	=	48,9	kN	$N_{comb1;c;s;d}$ (min. Compr. or tension)	=	0	kN
	$F_{perpend.;s;d}$	=	0	kN	$N_{comb2;c;s;d}$ (max. compression)	=	0	kN

Angle profile : *H100/100/6* (*1)

h	=	100	mm	I_y	=	680089	mm^4
b	=	100	mm	$W_{y;el;eff.1}$	=	11071	mm^3
t_f	=	6	mm	$W_{y;el;eff.2}$	=	29775	mm^3
y_s	=	22,8	mm	i_y	=	26,0	mm
A_{bruto}	=	1006	mm^2	i_v	=	16,6	mm

Material :

Mat. qual. Fe360 / Fe510	=	Fe360		Permissible stress $f_{y;d}$	=	235,0	N/mm^2

Geometry section and bolts:

$L_{y;cr}$	=	2220	mm	No. bolts / end / flange	=	2	**(Per flange !)**
$L_{v;cr}$	=	2220	mm	Type of bolts M / "	=	24	
$L_{tot\ (with\ comb.\ buckling)}$	=	0	mm	End distance bolt e1	=	35	mm
$a*L_{tot\ (with\ comb.\ buckling)}$	=	0	mm	Centre-centre spacing bolt s1	=	135	mm
$L_{perpendicular\ force}$	=	0	mm	Edge distance bolt e2	=	55	mm
Position perpendicular force	=	1	(⌉=1, ⌋=2)	Boltquality 4.6/5.6/8.8/10.9	=	4,6	
Column profile?	=	2	no=1, yes=2	Rolled screw threads	=	1	
Thickness tie plate	=	6	mm	Dubble strap joint no=1, yes=2	=	1	

Summary checks :

1 - Check tension on member :

$UC_1 = N_{Ed} / N_{t.Rd}$ = **0,27** **< 1**

2 - Check perpendicular force on member :

$UC_2 = M_{Ed} / M_{c.Rd}$ = **n.v.t.** **< 1**

3 - Check of the member slenderness :

$UC_3 = C_{max;buc} / C_{perm}$ = **133** **< 120**

4 - Check stress in member due to compression without excentricity:

$UC_4 = N_{E;d} / (C_{max;buc} \times N_{b;Rd})$ = **0,99** **< 1**

5 - Check stress in member due to compression with excentricity:

$UC_{5-1} = N_{E;d} / (C_{max;buc} \times N_{b;Rd})$ = **n.v.t.** **< 1**

$UC_{5-2} = N_{E;d} / N_{b;Rd} + k_{yy} \times (M_{y;Ed} + DM_{y;Ed}) / (C_{LT} \times M_{y;Rk})$ = **n.v.t.** **< 1**

6 - Check stress with combined buckling of two sections:

$UC_{5-1} = N_{E;d} / (C_{max;buc} \times N_{b;Rd})$ = **n.v.t.** **< 1**

$UC_{5-2} = N_{E;d} / N_{b;Rd} + k_{yy} \times (M_{y;Ed} + DM_{y;Ed}) / (C_{LT} \times M_{y;Rk})$ = **n.v.t.** **< 1**

7 - Check shear stress boltconnection:

$UC_7 = F_{v;Ed} / F_{v;Rd}$ = **0,32** **< 1**

8 - Check bearing stress boltconnection:

$UC_8 = F_{b;Ed} / F_{b;Rd}$ = **0,26** **< 1**

Remarks:

The maximum increase of stress or totalstress is(*2) : **$U.C_{max}$ = 0,99 = 99%**

(*1) Eventually, with the checks of the stresses, the cross-section reduction method is used according to prEN 1993-1-5.

(*2) The total stress or increase of stress has been related to the permissible stress.

Revision :	0	A	B	C	D	E	F
Date :	5-feb-2014						
Name :	M. Glegola						
Checked :	J. Hollaar						

Referentienr :	13039140509	**Berekening :**	B.14008
Project	: 150 kV lijn Leiden - Zoetermeer		
Part	: mast 52		

D&C ENGINEERING

Check equal leg angle-members according to Eurocode 3, prEN 1993-1-1 : 2003

File prEN 1993-1-1.revB.xls d.d. 2-32012, JG

Check section: *Vak 10* *diagonalen voor- en achtervlak*

Memberforces : **(Attention! pressure = "-" and tension ="+")**

Compression:	N_{Sd}	=	-94,2	kN	***Combined forces diagonal:***			
Tension:	N_{Sd}	=	74,0	kN	$N_{comb1;c;s;d}$ (min. Compr. or tension)	=	0	kN
	$F_{perpend.;s;d}$	=	0	kN	$N_{comb2;c;s;d}$ (max. compression)	=	0	kN

Angle profile : *H120/80/8* (*1)

h	=	120	mm	I_y	=	2256520	mm^4
b	=	80	mm	$W_{y;el;eff.1}$	=	22266	mm^3
t_f	=	8	mm	$W_{y;el;eff.2}$	=	120944	mm^3
y_s	=	18,7	mm	i_y	=	38,2	mm
A_{bruto}	=	1549	mm^2	i_v	=	17,2	mm

Material :

Mat. qual. Fe360 / Fe510	=	Fe360		Permissible stress $f_{y;d}$	=	235,0	N/mm^2

Geometry section and bolts:

$L_{y;cr}$	=	4098	mm	No. bolts / end / flange	=	2	
$L_{v;cr}$	=	2090	mm	Type of bolts M / "	=	24	
$L_{tot\ (with\ comb.\ buckling)}$	=	0	mm	End distance bolt e1	=	35	mm
$a^*L_{tot\ (with\ comb.\ buckling)}$	=	0	mm	Centre-centre spacing bolt s1	=	70	mm
$L_{perpendicular\ force}$	=	0	mm	Edge distance bolt e2	=	35	mm
Position perpendicular force	=	1	(⌉=1, ⌋=2)	Boltquality 4.6/5.6/8.8/10.9	=	4,6	
Column profile?	=	1	no=1, yes=2	Rolled screw threads	=	1	
Thickness tie plate	=	8	mm	Dubble strap joint no=1, yes=2	=	1	

Summary checks :

1 - Check tension on member :

$UC_1 = N_{Ed} / N_{t.Rd}$ = **0,45** **< 1**

2 - Check perpendicular force on member :

$UC_2 = M_{Ed} / M_{c.Rd}$ = **n.v.t.** **< 1**

3 - Check of the member slenderness :

$UC_3 = C_{max;buc} / C_{perm}$ = **122** **< 200 or 240**

4 - Check stress in member due to compression without excentricity:

$UC_4 = N_{E;d} / (C_{max;buc} \times N_{b;Rd})$ = **0,58** **< 1**

5 - Check stress in member due to compression with excentricity:

$UC_{5-1} = N_{E;d} / (C_{max;buc} \times N_{b;Rd})$ = **n.v.t.** **< 1**

$UC_{5-2} = N_{E;d} / N_{b;Rd} + k_{yy} \times (M_{y;Ed} + DM_{y;Ed}) / (C_{LT} \times M_{y;Rk})$ = **n.v.t.** **< 1**

6 - Check stress with combined buckling of two sections:

$UC_{5-1} = N_{E;d} / (C_{max;buc} \times N_{b;Rd})$ = **n.v.t.** **< 1**

$UC_{5-2} = N_{E;d} / N_{b;Rd} + k_{yy} \times (M_{y;Ed} + DM_{y;Ed}) / (C_{LT} \times M_{y;Rk})$ = **n.v.t.** **< 1**

7 - Check shear stress boltconnection:

$UC_7 = F_{v;Ed} / F_{v;Rd}$ = **0,70** **< 1**

8 - Check bearing stress boltconnection:

$UC_8 = F_{b;Ed} / F_{b;Rd}$ = **0,72** **< 1**

Remarks:

The maximum increase of stress or totalstress is(*2) : **$U.C_{max}$ = 0,72 = 72%**

(*1) Eventually, with the checks of the stresses, the cross-section reduction method is used according to prEN 1993-1-5.

(*2) The total stress or increase of stress has been related to the permissible stress.

Revision :	0	A	B	C	D	E	F
Date :	5-feb-2014						
Name :	M. Glegola						
Checked :	J. Hollaar						

Referentienr :	13039140509	**Berekening :**	B.14008
Project	: 150 kV lijn Leiden - Zoetermeer		
Part	: mast 52		

D&C ENGINEERING

Check equal leg angle-members according to Eurocode 3, prEN 1993-1-1 : 2003

File prEN 1993-1-1.revB.xls d.d. 2-32012, JG

Check section: *Vak 10* *diagonalen zijvlak*

Memberforces : **(Attention! pressure = "-" and tension ="+")**

Compression:	N_{Sd}	=	*-44,8*	kN	***Combined forces diagonal:***			
Tension:	N_{Sd}	=	*35,2*	kN	$N_{comb1;c;s;d}$ (min. Compr. or tension)	=	*0*	kN
	$F_{perpend.;s;d}$	=	*0*	kN	$N_{comb2;c;s;d}$ (max. compression)	=	*0*	kN

Angle profile : *H80/80/10* (*1)

h	=	*80*	mm	I_y	=	*875033*	mm^4
b	=	*80*	mm	$W_{y;el;eff.1}$	=	*15449*	mm^3
t_f	=	*10*	mm	$W_{y;el;eff.2}$	=	*37458*	mm^3
y_s	=	*23,4*	mm	i_y	=	*24,1*	mm
A_{bruto}	=	*1511*	mm^2	i_v	=	*15,4*	mm

Material :

Mat. qual. Fe360 / Fe510	=	*Fe360*		Permissible stress $f_{y;d}$	=	*235,0*	N/mm^2

Geometry section and bolts:

$L_{y;cr}$	=	*2651*	mm	No. bolts / end / flange	=	*1*	
$L_{v;cr}$	=	*2651*	mm	Type of bolts M / "	=	*20*	
$L_{tot\ (with\ comb.\ buckling)}$	=	*0*	mm	End distance bolt e1	=	*30*	mm
$a*L_{tot\ (with\ comb.\ buckling)}$	=	*0*	mm	Centre-centre spacing bolt s1	=	*60*	mm
$L_{perpendicular\ force}$	=	*0*	mm	Edge distance bolt e2	=	*35*	mm
Position perpendicular force	=	*1*	(⌉=1, ⌋=2)	Boltquality 4.6/5.6/8.8/10.9	=	*4,6*	
Column profile?	=	*1*	no=1, yes=2	Rolled screw threads	=	*1*	
Thickness tie plate	=	*8*	mm	Dubble strap joint no=1, yes=2	=	*1*	

Summary checks :

1 - Check tension on member :

$UC_1 = N_{Ed} / N_{t.Rd}$ = **0,25** **< 1**

2 - Check perpendicular force on member :

$UC_2 = M_{Ed} / M_{c.Rd}$ = **n.v.t.** **< 1**

3 - Check of the member slenderness :

$UC_3 = C_{max;buc} / C_{perm}$ = **172** **< 200 or 240**

4 - Check stress in member due to compression without excentricity:

$UC_4 = N_{E;d} / (C_{max;buc} \times N_{b;Rd})$ = **n.v.t.** **< 1**

5 - Check stress in member due to compression with excentricity:

$UC_{5-1} = N_{E;d} / (C_{max;buc} \times N_{b;Rd})$ = **0,52** **< 1**

$UC_{5-2} = N_{E;d} / N_{b;Rd} + k_{yy} \times (M_{y;Ed} + DM_{y;Ed}) / (C_{LT} \times M_{y;Rk})$ = **0,73** **< 1**

6 - Check stress with combined buckling of two sections:

$UC_{5-1} = N_{E;d} / (C_{max;buc} \times N_{b;Rd})$ = **n.v.t.** **< 1**

$UC_{5-2} = N_{E;d} / N_{b;Rd} + k_{yy} \times (M_{y;Ed} + DM_{y;Ed}) / (C_{LT} \times M_{y;Rk})$ = **n.v.t.** **< 1**

7 - Check shear stress boltconnection:

$UC_7 = F_{v;Ed} / F_{v;Rd}$ = **0,95** **< 1**

8 - Check bearing stress boltconnection:

$UC_8 = F_{b;Ed} / F_{b;Rd}$ = **0,67** **< 1**

Remarks:

The maximum increase of stress or totalstress is(*2) : **$U.C_{max}$ = 0,95 = 95%**

(*1) Eventually, with the checks of the stresses, the cross-section reduction method is used according to prEN 1993-1-5.

(*2) The total stress or increase of stress has been related to the permissible stress.

Revision :	0	A	B	C	D	E	F
Date :	5-feb-2014						
Name :	M. Glegola						
Checked :	J. Hollaar						

Referentienr :	13039140509	**Berekening :**	B.14008
Project	: 150 kV lijn Leiden - Zoetermeer		
Part	: mast 52		

D&C ENGINEERING

Check equal leg angle-members according to Eurocode 3, prEN 1993-1-1 : 2003

File prEN 1993-1-1.revB.xls d.d. 2-32012, JG

Check section: *Vak 10* *hor. knikverkorters voorvlak*

Memberforces : **(Attention! pressure = "-" and tension ="+")**

Compression:	N_{Sd}	=	-0,87	kN	***Combined forces diagonal:***			
Tension:	N_{Sd}	=	0,87	kN	$N_{comb1;c;s;d}$ (min. Compr. or tension)	=	0	kN
	$F_{perpend.;s;d}$	=	1,5	kN	$N_{comb2;c;s;d}$ (max. compression)	=	0	kN

Angle profile : *H45/30/5* (*1)

h	=	45	mm	I_y	=	69843	mm^4
b	=	30	mm	$W_{y;el;eff.1}$	=	1877	mm^3
t_f	=	5	mm	$W_{y;el;eff.2}$	=	8962	mm^3
y_s	=	7,8	mm	i_y	=	14,1	mm
A_{bruto}	=	352	mm^2	i_v	=	6,4	mm

Material :

Mat. qual. Fe360 / Fe510	=	Fe360		Permissible stress $f_{y;d}$	=	235,0	N/mm^2

Geometry section and bolts:

$L_{y;cr}$	=	799	mm	No. bolts / end / flange	=	1	
$L_{v;cr}$	=	799	mm	Type of bolts M / "	=	16	
$L_{tot\ (with\ comb.\ buckling)}$	=	0	mm	End distance bolt e1	=	25	mm
$a*L_{tot\ (with\ comb.\ buckling)}$	=	0	mm	Centre-centre spacing bolt s1	=	70	mm
$L_{perpendicular\ force}$	=	799	mm	Edge distance bolt e2	=	35	mm
Position perpendicular force	=	1	(⌉=1, ⌋=2)	Boltquality 4.6/5.6/8.8/10.9	=	4,6	
Column profile?	=	1	no=1, yes=2	Rolled screw threads	=	1	
Thickness tie plate	=	7	mm	Dubble strap joint no=1, yes=2	=	1	

Summary checks :

1 - Check tension on member :

$UC_1 = N_{Ed} / N_{t.Rd}$ = **0,01** **< 1**

2 - Check perpendicular force on member :

$UC_2 = M_{Ed} / M_{c.Rd}$ = **0,68** **< 1**

3 - Check of the member slenderness :

$UC_3 = C_{max;buc} / C_{perm}$ = **125** **< 200 or 240**

4 - Check stress in member due to compression without excentricity:

$UC_4 = N_{E;d} / (C_{max;buc} \times N_{b;Rd})$ = **n.v.t.** **< 1**

5 - Check stress in member due to compression with excentricity:

$UC_{5-1} = N_{E;d} / (C_{max;buc} \times N_{b;Rd})$ = **0,03** **< 1**

$UC_{5-2} = N_{E;d} / N_{b;Rd} + k_{yy} \times (M_{y;Ed} + DM_{y;Ed}) / (C_{LT} \times M_{y;Rk})$ = **0,03** **< 1**

6 - Check stress with combined buckling of two sections:

$UC_{5-1} = N_{E;d} / (C_{max;buc} \times N_{b;Rd})$ = **n.v.t.** **< 1**

$UC_{5-2} = N_{E;d} / N_{b;Rd} + k_{yy} \times (M_{y;Ed} + DM_{y;Ed}) / (C_{LT} \times M_{y;Rk})$ = **n.v.t.** **< 1**

7 - Check shear stress boltconnection:

$UC_7 = F_{v;Ed} / F_{v;Rd}$ = **0,03** **< 1**

8 - Check bearing stress boltconnection:

$UC_8 = F_{b;Ed} / F_{b;Rd}$ = **0,03** **< 1**

Remarks:

The maximum increase of stress or totalstress is(*2) : **$U.C_{max}$ = 0,68 = 68%**

(*1) Eventually, with the checks of the stresses, the cross-section reduction method is used according to prEN 1993-1-5.

(*2) The total stress or increase of stress has been related to the permissible stress.

Revision :	0	A	B	C	D	E	F
Date :	5-feb-2014						
Name :	M. Glegola						
Checked :	J. Hollaar						

Referentienr :	13039140509	**Berekening :**	B.14008
Project	: 150 kV lijn Leiden - Zoetermeer		
Part	: mast 52		

D&C ENGINEERING

Check equal leg angle-members according to Eurocode 3, prEN 1993-1-1 : 2003

File prEN 1993-1-1.revB.xls d.d. 2-32012, JG

Check section: *Vak 10* *hor. knikverkorters zijvlak*

Memberforces : **(Attention! pressure = "-" and tension ="+")**

Compression:	N_{Sd}	=	*-0,87*	kN	***Combined forces diagonal:***			
Tension:	N_{Sd}	=	*0,87*	kN	$N_{comb1;c;s;d}$ (min. Compr. or tension)	=	*0*	kN
	$F_{perpend.;s;d}$	=	*1,5*	kN	$N_{comb2;c;s;d}$ (max. compression)	=	*0*	kN

Angle profile : *H45/45/5* (*1)

h	=	*45*	mm	I_y	=	*78410*	mm^4
b	=	*45*	mm	$W_{y;el;eff.1}$	=	*2435*	mm^3
t_f	=	*5*	mm	$W_{y;el;eff.2}$	=	*6129*	mm^3
y_s	=	*12,8*	mm	i_y	=	*13,5*	mm
A_{bruto}	=	*430*	mm^2	i_v	=	*8,6*	mm

Material :

Mat. qual. Fe360 / Fe510	=	*Fe360*		Permissible stress $f_{y;d}$	=	*235,0*	N/mm^2

Geometry section and bolts:

$L_{y;cr}$	=	*1268*	mm	No. bolts / end / flange	=	*1*	
$L_{v;cr}$	=	*1268*	mm	Type of bolts M / "	=	*16*	
$L_{tot\ (with\ comb.\ buckling)}$	=	*0*	mm	End distance bolt e1	=	*25*	mm
$a*L_{tot\ (with\ comb.\ buckling)}$	=	*0*	mm	Centre-centre spacing bolt s1	=	*70*	mm
$L_{perpendicular\ force}$	=	*1268*	mm	Edge distance bolt e2	=	*35*	mm
Position perpendicular force	=	*1*	(⌉=1, ⌋=2)	Boltquality 4.6/5.6/8.8/10.9	=	*4,6*	
Column profile?	=	*1*	no=1, yes=2	Rolled screw threads	=	*1*	
Thickness tie plate	=	*5*	mm	Dubble strap joint no=1, yes=2	=	*1*	

Summary checks :

1 - Check tension on member :

$UC_1 = N_{Ed} / N_{t.Rd}$ = **0,01** **< 1**

2 - Check perpendicular force on member :

$UC_2 = M_{Ed} / M_{c.Rd}$ = **0,83** **< 1**

3 - Check of the member slenderness :

$UC_3 = C_{max;buc} / C_{perm}$ = **147** **< 200 or 240**

4 - Check stress in member due to compression without excentricity:

$UC_4 = N_{E;d} / (C_{max;buc} \times N_{b;Rd})$ = **n.v.t.** **< 1**

5 - Check stress in member due to compression with excentricity:

$UC_{5-1} = N_{E;d} / (C_{max;buc} \times N_{b;Rd})$ = **0,03** **< 1**

$UC_{5-2} = N_{E;d} / N_{b;Rd} + k_{yy} \times (M_{y;Ed} + DM_{y;Ed}) / (C_{LT} \times M_{y;Rk})$ = **0,04** **< 1**

6 - Check stress with combined buckling of two sections:

$UC_{5-1} = N_{E;d} / (C_{max;buc} \times N_{b;Rd})$ = **n.v.t.** **< 1**

$UC_{5-2} = N_{E;d} / N_{b;Rd} + k_{yy} \times (M_{y;Ed} + DM_{y;Ed}) / (C_{LT} \times M_{y;Rk})$ = **n.v.t.** **< 1**

7 - Check shear stress boltconnection:

$UC_7 = F_{v;Ed} / F_{v;Rd}$ = **0,03** **< 1**

8 - Check bearing stress boltconnection:

$UC_8 = F_{b;Ed} / F_{b;Rd}$ = **0,03** **< 1**

Remarks:

The maximum increase of stress or totalstress is(*2) : **$U.C_{max}$ = 0,83 = 83%**

(*1) Eventually, with the checks of the stresses, the cross-section reduction method is used according to prEN 1993-1-5.

(*2) The total stress or increase of stress has been related to the permissible stress.

Revision :	0	A	B	C	D	E	F
Date :	5-feb-2014						
Name :	M. Glegola						
Checked :	J. Hollaar						

Referentienr :	13039140509	**Berekening :**	B.14008
Project	: 150 kV lijn Leiden - Zoetermeer		
Part	: mast 52		

D&C ENGINEERING

Check equal leg angle-members according to Eurocode 3, prEN 1993-1-1 : 2003

File prEN 1993-1-1.revB.xls d.d. 2-32012, JG

Check section: *Vak 10* *schuine knikverkorters voorvlak*

Memberforces : **(Attention! pressure = "-" and tension ="+")**

Compression:	N_{Sd}	=	-2,24	kN	***Combined forces diagonal:***			
Tension:	N_{Sd}	=	2,24	kN	$N_{comb1;c;s;d}$ (min. Compr. or tension)	=	0	kN
	$F_{perpend.;s;d}$	=	0	kN	$N_{comb2;c;s;d}$ (max. compression)	=	0	kN

Angle profile : *H50/40/5* (*1)

h	=	50	mm	I_y	=	103800	mm^4
b	=	40	mm	$W_{y;el;eff.1}$	=	2638	mm^3
t_f	=	5	mm	$W_{y;el;eff.2}$	=	9746	mm^3
y_s	=	10,7	mm	i_y	=	15,6	mm
A_{bruto}	=	427	mm^2	i_v	=	8,4	mm

Material :

Mat. qual. Fe360 / Fe510	=	Fe360		Permissible stress $f_{y;d}$	=	235,0	N/mm^2

Geometry section and bolts:

$L_{y;cr}$	=	2179	mm	No. bolts / end / flange	=	1	
$L_{v;cr}$	=	2179	mm	Type of bolts M / "	=	16	
$L_{tot\ (with\ comb.\ buckling)}$	=	0	mm	End distance bolt e1	=	25	mm
$a*L_{tot\ (with\ comb.\ buckling)}$	=	0	mm	Centre-centre spacing bolt s1	=	70	mm
$L_{perpendicular\ force}$	=	0	mm	Edge distance bolt e2	=	35	mm
Position perpendicular force	=	1	(⌉=1, ⌋=2)	Boltquality 4.6/5.6/8.8/10.9	=	4,6	
Column profile?	=	1	no=1, yes=2	Rolled screw threads	=	1	
Thickness tie plate	=	7	mm	Dubble strap joint no=1, yes=2	=	1	

Summary checks :

1 - Check tension on member :

$UC_1 = N_{Ed} / N_{t.Rd}$ = **0,03** **< 1**

2 - Check perpendicular force on member :

$UC_2 = M_{Ed} / M_{c.Rd}$ = **n.v.t.** **< 1**

3 - Check of the member slenderness :

$UC_3 = C_{max;buc} / C_{perm}$ = **259** **< 200 or 240**

4 - Check stress in member due to compression without excentricity:

$UC_4 = N_{E;d} / (C_{max;buc} \times N_{b;Rd})$ = **n.v.t.** **< 1**

5 - Check stress in member due to compression with excentricity:

$UC_{5-1} = N_{E;d} / (C_{max;buc} \times N_{b;Rd})$ = **0,19** **< 1**

$UC_{5-2} = N_{E;d} / N_{b;Rd} + k_{yy} \times (M_{y;Ed} + DM_{y;Ed}) / (C_{LT} \times M_{y;Rk})$ = **0,22** **< 1**

6 - Check stress with combined buckling of two sections:

$UC_{5-1} = N_{E;d} / (C_{max;buc} \times N_{b;Rd})$ = **n.v.t.** **< 1**

$UC_{5-2} = N_{E;d} / N_{b;Rd} + k_{yy} \times (M_{y;Ed} + DM_{y;Ed}) / (C_{LT} \times M_{y;Rk})$ = **n.v.t.** **< 1**

7 - Check shear stress boltconnection:

$UC_7 = F_{v;Ed} / F_{v;Rd}$ = **0,07** **< 1**

8 - Check bearing stress boltconnection:

$UC_8 = F_{b;Ed} / F_{b;Rd}$ = **0,08** **< 1**

Remarks:

The maximum increase of stress or totalstress is(*2) : **$U.C_{max}$ = 0,22 = 22%**

(*1) Eventually, with the checks of the stresses, the cross-section reduction method is used according to prEN 1993-1-5.

(*2) The total stress or increase of stress has been related to the permissible stress.

Revision :	0	A	B	C	D	E	F
Date :	5-feb-2014						
Name :	M. Glegola						
Checked :	J. Hollaar						

Referentienr :	13039140509	**Berekening :**	B.14008
Project	: 150 kV lijn Leiden - Zoetermeer		
Part	: mast 52	**Sheet nr. :**	11

D&C ENGINEERING

Check equal leg angle-members according to Eurocode 3, prEN 1993-1-1 : 2003

File prEN 1993-1-1.revB.xls d.d. 2-32012, JG

Check section: *Vak 11* *randen*

Memberforces : **(Attention! pressure = "-" and tension ="+")**

Compression:	N_{Sd}	=	-58,8	kN	***Combined forces diagonal:***			
Tension:	N_{Sd}	=	36,3	kN	$N_{comb1;c;s;d}$ (min. Compr. or tension)	=	0	kN
	$F_{perpend.;s;d}$	=	0	kN	$N_{comb2;c;s;d}$ (max. compression)	=	0	kN

Angle profile : *H80/80/6* (*1)

h	=	80	mm	I_y	=	521007	mm^4
b	=	80	mm	$W_{y;el;eff.1}$	=	9280	mm^3
t_f	=	6	mm	$W_{y;el;eff.2}$	=	24509	mm^3
y_s	=	21,3	mm	i_y	=	23,9	mm
A_{bruto}	=	914	mm^2	i_v	=	15,3	mm

Material :

Mat. qual. Fe360 / Fe510	=	Fe360		Permissible stress $f_{y;d}$	=	235,0	N/mm^2

Geometry section and bolts:

$L_{y;cr}$	=	970	mm	No. bolts / end / flange	=	2	**(Per flange !)**
$L_{v;cr}$	=	970	mm	Type of bolts M / "	=	24	
$L_{tot\ (with\ comb.\ buckling)}$	=	0	mm	End distance bolt e1	=	35	mm
$a*L_{tot\ (with\ comb.\ buckling)}$	=	0	mm	Centre-centre spacing bolt s1	=	75	mm
$L_{perpendicular\ force}$	=	0	mm	Edge distance bolt e2	=	35	mm
Position perpendicular force	=	1	(⌉=1, ⌋=2)	Boltquality 4.6/5.6/8.8/10.9	=	4,6	
Column profile?	=	2	no=1, yes=2	Rolled screw threads	=	1	
Thickness tie plate	=	6	mm	Dubble strap joint no=1, yes=2	=	1	

Summary checks :

1 - Check tension on member :

$UC_1 = N_{Ed} / N_{t.Rd}$ = **0,23** **< 1**

2 - Check perpendicular force on member :

$UC_2 = M_{Ed} / M_{c.Rd}$ = **n.v.t.** **< 1**

3 - Check of the member slenderness :

$UC_3 = C_{max;buc} / C_{perm}$ = **64** **< 120**

4 - Check stress in member due to compression without excentricity:

$UC_4 = N_{E;d} / (C_{max;buc} \times N_{b;Rd})$ = **0,34** **< 1**

5 - Check stress in member due to compression with excentricity:

$UC_{5-1} = N_{E;d} / (C_{max;buc} \times N_{b;Rd})$ = **n.v.t.** **< 1**

$UC_{5-2} = N_{E;d} / N_{b;Rd} + k_{yy} \times (M_{y;Ed} + DM_{y;Ed}) / (C_{LT} \times M_{y;Rk})$ = **n.v.t.** **< 1**

6 - Check stress with combined buckling of two sections:

$UC_{5-1} = N_{E;d} / (C_{max;buc} \times N_{b;Rd})$ = **n.v.t.** **< 1**

$UC_{5-2} = N_{E;d} / N_{b;Rd} + k_{yy} \times (M_{y;Ed} + DM_{y;Ed}) / (C_{LT} \times M_{y;Rk})$ = **n.v.t.** **< 1**

7 - Check shear stress boltconnection:

$UC_7 = F_{v;Ed} / F_{v;Rd}$ = **0,22** **< 1**

8 - Check bearing stress boltconnection:

$UC_8 = F_{b;Ed} / F_{b;Rd}$ = **0,24** **< 1**

Remarks:

The maximum increase of stress or totalstress is(*2) : **$U.C_{max}$ = 0,34 = 34%**

(*1) Eventually, with the checks of the stresses, the cross-section reduction method is used according to prEN 1993-1-5.

(*2) The total stress or increase of stress has been related to the permissible stress.

Revision :	0	A	B	C	D	E	F
Date :	5-feb-2014						
Name :	M. Glegola						
Checked :	J. Hollaar						

Referentienr :	13039140509	**Berekening :**	B.14008
Project	: 150 kV lijn Leiden - Zoetermeer		
Part	: mast 52		

D&C ENGINEERING

Check equal leg angle-members according to Eurocode 3, prEN 1993-1-1 : 2003

File prEN 1993-1-1.revB.xls d.d. 2-32012, JG

Check section: *Vak 11* *diagonalen voor- en achtervlak*

Memberforces : **(Attention! pressure = "-" and tension ="+")**

Compression:	N_{Sd}	=	*-67,9*	kN	***Combined forces diagonal:***			
Tension:	N_{Sd}	=	*80,8*	kN	$N_{comb1;c;s;d}$ (min. Compr. or tension)	=	*0*	kN
	$F_{perpend.;s;d}$	=	*0*	kN	$N_{comb2;c;s;d}$ (max. compression)	=	*0*	kN

Angle profile : *H75/75/7* (*1)

h	=	*75*	mm	I_y	=	*523536*	mm^4
b	=	*75*	mm	$W_{y;el;eff.1}$	=	*9673*	mm^3
t_f	=	*7*	mm	$W_{y;el;eff.2}$	=	*25075*	mm^3
y_s	=	*20,9*	mm	i_y	=	*22,7*	mm
A_{bruto}	=	*1012*	mm^2	i_v	=	*14,4*	mm

Material :

Mat. qual. Fe360 / Fe510	=	*Fe360*		Permissible stress $f_{y;d}$	=	*235,0*	N/mm^2

Geometry section and bolts:

$L_{y;cr}$	=	*1506*	mm	No. bolts / end / flange	=	*2*	
$L_{v;cr}$	=	*1506*	mm	Type of bolts M / "	=	*24*	
$L_{tot\ (with\ comb.\ buckling)}$	=	*0*	mm	End distance bolt e1	=	*35*	mm
$a^*L_{tot\ (with\ comb.\ buckling)}$	=	*0*	mm	Centre-centre spacing bolt s1	=	*70*	mm
$L_{perpendicular\ force}$	=	*0*	mm	Edge distance bolt e2	=	*35*	mm
Position perpendicular force	=	*1*	(⌉=1, ⌋=2)	Boltquality 4.6/5.6/8.8/10.9	=	*4,6*	
Column profile?	=	*1*	no=1, yes=2	Rolled screw threads	=	*1*	
Thickness tie plate	=	*8*	mm	Dubble strap joint no=1, yes=2	=	*1*	

Summary checks :

1 - Check tension on member :

$UC_1 = N_{Ed} / N_{t.Rd}$ = **0,80** **< 1**

2 - Check perpendicular force on member :

$UC_2 = M_{Ed} / M_{c.Rd}$ = **n.v.t.** **< 1**

3 - Check of the member slenderness :

$UC_3 = C_{max;buc} / C_{perm}$ = **104** **< 200 or 240**

4 - Check stress in member due to compression without excentricity:

$UC_4 = N_{E;d} / (C_{max;buc} \times N_{b;Rd})$ = **0,54** **< 1**

5 - Check stress in member due to compression with excentricity:

$UC_{5-1} = N_{E;d} / (C_{max;buc} \times N_{b;Rd})$ = **n.v.t.** **< 1**

$UC_{5-2} = N_{E;d} / N_{b;Rd} + k_{yy} \times (M_{y;Ed} + DM_{y;Ed}) / (C_{LT} \times M_{y;Rk})$ = **n.v.t.** **< 1**

6 - Check stress with combined buckling of two sections:

$UC_{5-1} = N_{E;d} / (C_{max;buc} \times N_{b;Rd})$ = **n.v.t.** **< 1**

$UC_{5-2} = N_{E;d} / N_{b;Rd} + k_{yy} \times (M_{y;Ed} + DM_{y;Ed}) / (C_{LT} \times M_{y;Rk})$ = **n.v.t.** **< 1**

7 - Check shear stress boltconnection:

$UC_7 = F_{v;Ed} / F_{v;Rd}$ = **0,60** **< 1**

8 - Check bearing stress boltconnection:

$UC_8 = F_{b;Ed} / F_{b;Rd}$ = **0,90** **< 1**

Remarks:

The maximum increase of stress or totalstress is(*2) : **$U.C_{max}$ = 0,90 = 90%**

(*1) Eventually, with the checks of the stresses, the cross-section reduction method is used according to prEN 1993-1-5.

(*2) The total stress or increase of stress has been related to the permissible stress.

Revision :	0	A	B	C	D	E	F
Date :	5-feb-2014						
Name :	M. Glegola						
Checked :	J. Hollaar						

Referentienr :	13039140509	**Berekening :**	B.14008
Project	: 150 kV lijn Leiden - Zoetermeer		
Part	: mast 52		

D&C ENGINEERING

Check equal leg angle-members according to Eurocode 3, prEN 1993-1-1 : 2003

File prEN 1993-1-1.revB.xls d.d. 2-32012, JG

Check section: *Vak 11* *schuine diagonaal v.v en a.v*

Memberforces : **(Attention! pressure = "-" and tension ="+")**

Compression:	N_{Sd}	=	*-116,6*	kN	***Combined forces diagonal:***			
Tension:	N_{Sd}	=	*82,2*	kN	$N_{comb1;c;s;d}$ (min. Compr. or tension)	=	*0*	kN
	$F_{perpend.;s;d}$	=	*0*	kN	$N_{comb2;c;s;d}$ (max. compression)	=	*0*	kN

Angle profile : *H80/80/6* (*1)

h	=	*80*	mm	I_y	=	*521007*	mm^4
b	=	*80*	mm	$W_{y;el;eff.1}$	=	*9280*	mm^3
t_f	=	*6*	mm	$W_{y;el;eff.2}$	=	*24509*	mm^3
y_s	=	*21,3*	mm	i_y	=	*23,9*	mm
A_{bruto}	=	*914*	mm^2	i_v	=	*15,3*	mm

Material :

Mat. qual. Fe360 / Fe510	=	*Fe360*		Permissible stress $f_{y;d}$	=	*235,0*	N/mm^2

Geometry section and bolts:

$L_{y;cr}$	=	*1541*	mm	No. bolts / end / flange	=	*2*	
$L_{v;cr}$	=	*1541*	mm	Type of bolts M / "	=	*24*	
$L_{tot\ (with\ comb.\ buckling)}$	=	*0*	mm	End distance bolt e1	=	*35*	mm
$a*L_{tot\ (with\ comb.\ buckling)}$	=	*0*	mm	Centre-centre spacing bolt s1	=	*70*	mm
$L_{perpendicular\ force}$	=	*1541*	mm	Edge distance bolt e2	=	*35*	mm
Position perpendicular force	=	*1*	(⌉=1, ⌋=2)	Boltquality 4.6/5.6/8.8/10.9	=	*4,6*	
Column profile?	=	*1*	no=1, yes=2	Rolled screw threads	=	*1*	
Thickness tie plate	=	*8*	mm	Dubble strap joint no=1, yes=2	=	*1*	

Summary checks :

1 - Check tension on member :

$UC_1 = N_{Ed} / N_{t.Rd}$ = **0,89** **< 1**

2 - Check perpendicular force on member :

$UC_2 = M_{Ed} / M_{c.Rd}$ = **n.v.t.** **< 1**

3 - Check of the member slenderness :

$UC_3 = C_{max;buc} / C_{perm}$ = **101** **< 200 or 240**

4 - Check stress in member due to compression without excentricity:

$UC_4 = N_{E;d} / (C_{max;buc} \times N_{b;Rd})$ = **0,99** **< 1**

5 - Check stress in member due to compression with excentricity:

$UC_{5-1} = N_{E;d} / (C_{max;buc} \times N_{b;Rd})$ = **n.v.t.** **< 1**

$UC_{5-2} = N_{E;d} / N_{b;Rd} + k_{yy} \times (M_{y;Ed} + DM_{y;Ed}) / (C_{LT} \times M_{y;Rk})$ = **n.v.t.** **< 1**

6 - Check stress with combined buckling of two sections:

$UC_{5-1} = N_{E;d} / (C_{max;buc} \times N_{b;Rd})$ = **n.v.t.** **< 1**

$UC_{5-2} = N_{E;d} / N_{b;Rd} + k_{yy} \times (M_{y;Ed} + DM_{y;Ed}) / (C_{LT} \times M_{y;Rk})$ = **n.v.t.** **< 1**

7 - Check shear stress boltconnection:

$UC_7 = F_{v;Ed} / F_{v;Rd}$ = **0,86** **< 1**

8 - Check bearing stress boltconnection:

$UC_8 = F_{b;Ed} / F_{b;Rd}$ = **1,07** **> 1 !!**

Remarks:

The maximum increase of stress or totalstress is(*2) : **$U.C_{max}$ = 1,07 = 107%**

(*1) Eventually, with the checks of the stresses, the cross-section reduction method is used according to prEN 1993-1-5.

(*2) The total stress or increase of stress has been related to the permissible stress.

Revision :	0	A	B	C	D	E	F
Date :	5-feb-2014						
Name :	M. Glegola						
Checked :	J. Hollaar						

Referentienr :	13039140509	**Berekening :**	B.14008
Project	: 150 kV lijn Leiden - Zoetermeer		
Part	: mast 52		

D&C ENGINEERING

Check equal leg angle-members according to Eurocode 3, prEN 1993-1-1 : 2003

File prEN 1993-1-1.revB.xls d.d. 2-32012, JG

Check section: *Vak 11* *schuine diagonaal v.v en a.v* **verzwaard**

Memberforces : **(Attention! pressure = "-" and tension ="+")**

Compression:	N_{Sd}	=	-116,6	kN	***Combined forces diagonal:***			
Tension:	N_{Sd}	=	82,2	kN	$N_{comb1;c;s;d}$ (min. Compr. or tension)	=	0	kN
	$F_{perpend.;s;d}$	=	0	kN	$N_{comb2;c;s;d}$ (max. compression)	=	0	kN

Angle profile : *H80/80/8* (*1)

h	=	80	mm	I_y	=	722469	mm^4
b	=	80	mm	$W_{y;el;eff.1}$	=	12576	mm^3
t_f	=	8	mm	$W_{y;el;eff.2}$	=	32038	mm^3
y_s	=	22,6	mm	i_y	=	24,3	mm
A_{bruto}	=	1227	mm^2	i_v	=	15,4	mm

Material :

Mat. qual. Fe360 / Fe510	=	Fe360		Permissible stress $f_{y;d}$	=	235,0	N/mm^2

Geometry section and bolts:

$L_{y;cr}$	=	1541	mm	No. bolts / end / flange	=	2	
$L_{v;cr}$	=	1541	mm	Type of bolts M / "	=	24	
$L_{tot\ (with\ comb.\ buckling)}$	=	0	mm	End distance bolt e1	=	35	mm
$a^*L_{tot\ (with\ comb.\ buckling)}$	=	0	mm	Centre-centre spacing bolt s1	=	70	mm
$L_{perpendicular\ force}$	=	1541	mm	Edge distance bolt e2	=	35	mm
Position perpendicular force	=	1	(⌉=1, ⌋=2)	Boltquality 4.6/5.6/8.8/10.9	=	8,8	
Column profile?	=	1	no=1, yes=2	Rolled screw threads	=	1	
Thickness tie plate	=	8	mm	Dubble strap joint no=1, yes=2	=	1	

Summary checks :

1 - Check tension on member :

$UC_1 = N_{Ed} / N_{t.Rd}$ = **0,66** **< 1**

2 - Check perpendicular force on member :

$UC_2 = M_{Ed} / M_{c.Rd}$ = **n.v.t.** **< 1**

3 - Check of the member slenderness :

$UC_3 = C_{max;buc} / C_{perm}$ = **100** **< 200 or 240**

4 - Check stress in member due to compression without excentricity:

$UC_4 = N_{E;d} / (C_{max;buc} \times N_{b;Rd})$ = **0,73** **< 1**

5 - Check stress in member due to compression with excentricity:

$UC_{5-1} = N_{E;d} / (C_{max;buc} \times N_{b;Rd})$ = **n.v.t.** **< 1**

$UC_{5-2} = N_{E;d} / N_{b;Rd} + k_{yy} \times (M_{y;Ed} + DM_{y;Ed}) / (C_{LT} \times M_{y;Rk})$ = **n.v.t.** **< 1**

6 - Check stress with combined buckling of two sections:

$UC_{5-1} = N_{E;d} / (C_{max;buc} \times N_{b;Rd})$ = **n.v.t.** **< 1**

$UC_{5-2} = N_{E;d} / N_{b;Rd} + k_{yy} \times (M_{y;Ed} + DM_{y;Ed}) / (C_{LT} \times M_{y;Rk})$ = **n.v.t.** **< 1**

7 - Check shear stress boltconnection:

$UC_7 = F_{v;Ed} / F_{v;Rd}$ = **0,43** **< 1**

8 - Check bearing stress boltconnection:

$UC_8 = F_{b;Ed} / F_{b;Rd}$ = **0,80** **< 1**

Remarks:

The maximum increase of stress or totalstress is(*2) : **$U.C_{max}$ = 0,80 = 80%**

(*1) Eventually, with the checks of the stresses, the cross-section reduction method is used according to prEN 1993-1-5.

(*2) The total stress or increase of stress has been related to the permissible stress.

Revision :	0	A	B	C	D	E	F
Date :	5-feb-2014						
Name :	M. Glegola						
Checked :	J. Hollaar						

Referentienr :	13039140509	**Berekening :**	B.14008
Project	: 150 kV lijn Leiden - Zoetermeer		
Part	: mast 52		

D&C ENGINEERING

Check equal leg angle-members according to Eurocode 3, prEN 1993-1-1 : 2003

File prEN 1993-1-1.revB.xls d.d. 2-32012, JG

Check section: *Vak 11* *schuine diagonalen zijvlak*

Memberforces : **(Attention! pressure = "-" and tension ="+")**

Compression:	N_{Sd}	=	*-6,7*	kN	***Combined forces diagonal:***			
Tension:	N_{Sd}	=	*4,7*	kN	$N_{comb1;c;s;d}$ (min. Compr. or tension)	=	*0*	kN
	$F_{perpend.;s;d}$	=	*0*	kN	$N_{comb2;c;s;d}$ (max. compression)	=	*0*	kN

Angle profile : *H45/30/5* (*1)

h	=	*45*	mm	I_y	=	*69843*	mm^4
b	=	*30*	mm	$W_{y;el;eff.1}$	=	*1877*	mm^3
t_f	=	*5*	mm	$W_{y;el;eff.2}$	=	*8962*	mm^3
y_s	=	*7,8*	mm	i_y	=	*14,1*	mm
A_{bruto}	=	*352*	mm^2	i_v	=	*6,4*	mm

Material :

Mat. qual. Fe360 / Fe510	=	*Fe360*		Permissible stress $f_{y;d}$	=	*235,0*	N/mm^2

Geometry section and bolts:

$L_{y;cr}$	=	*1451*	mm	No. bolts / end / flange	=	*1*	
$L_{v;cr}$	=	*1451*	mm	Type of bolts M / "	=	*16*	
$L_{tot\ (with\ comb.\ buckling)}$	=	*0*	mm	End distance bolt e1	=	*35*	mm
$a^*L_{tot\ (with\ comb.\ buckling)}$	=	*0*	mm	Centre-centre spacing bolt s1	=	*70*	mm
$L_{perpendicular\ force}$	=	*0*	mm	Edge distance bolt e2	=	*35*	mm
Position perpendicular force	=	*1*	(⌉=1, ⌋=2)	Boltquality 4.6/5.6/8.8/10.9	=	*4,6*	
Column profile?	=	*1*	no=1, yes=2	Rolled screw threads	=	*1*	
Thickness tie plate	=	*8*	mm	Dubble strap joint no=1, yes=2	=	*1*	

Summary checks :

1 - Check tension on member :

$UC_1 = N_{Ed} / N_{t.Rd}$ = **0,06** **< 1**

2 - Check perpendicular force on member :

$UC_2 = M_{Ed} / M_{c.Rd}$ = **n.v.t.** **< 1**

3 - Check of the member slenderness :

$UC_3 = C_{max;buc} / C_{perm}$ = **227** **< 200 or 240**

4 - Check stress in member due to compression without excentricity:

$UC_4 = N_{E;d} / (C_{max;buc} \times N_{b;Rd})$ = **n.v.t.** **< 1**

5 - Check stress in member due to compression with excentricity:

$UC_{5-1} = N_{E;d} / (C_{max;buc} \times N_{b;Rd})$ = **0,54** **< 1**

$UC_{5-2} = N_{E;d} / N_{b;Rd} + k_{yy} \times (M_{y;Ed} + DM_{y;Ed}) / (C_{LT} \times M_{y;Rk})$ = **0,62** **< 1**

6 - Check stress with combined buckling of two sections:

$UC_{5-1} = N_{E;d} / (C_{max;buc} \times N_{b;Rd})$ = **n.v.t.** **< 1**

$UC_{5-2} = N_{E;d} / N_{b;Rd} + k_{yy} \times (M_{y;Ed} + DM_{y;Ed}) / (C_{LT} \times M_{y;Rk})$ = **n.v.t.** **< 1**

7 - Check shear stress boltconnection:

$UC_7 = F_{v;Ed} / F_{v;Rd}$ = **0,22** **< 1**

8 - Check bearing stress boltconnection:

$UC_8 = F_{b;Ed} / F_{b;Rd}$ = **0,13** **< 1**

Remarks:

The maximum increase of stress or totalstress is(*2) : **$U.C_{max}$ = 0,62 = 62%**

(*1) Eventually, with the checks of the stresses, the cross-section reduction method is used according to prEN 1993-1-5.

(*2) The total stress or increase of stress has been related to the permissible stress.

Revision :	0	A	B	C	D	E	F
Date :	5-feb-2014						
Name :	M. Glegola						
Checked :	J. Hollaar						

Referentienr :	13039140509	**Berekening :**	B.14008
Project	: 150 kV lijn Leiden - Zoetermeer		
Part	: mast 52		

D&C ENGINEERING

Check equal leg angle-members according to Eurocode 3, prEN 1993-1-1 : 2003

File prEN 1993-1-1.revB.xls d.d. 2-32012, JG

Check section: *Vak 11* *horizontaal zijvlak*

Memberforces : **(Attention! pressure = "-" and tension ="+")**

Compression:	N_{Sd}	=	*-2,7*	kN	***Combined forces diagonal:***			
Tension:	N_{Sd}	=	*18,1*	kN	$N_{comb1;c;s;d}$ (min. Compr. or tension)	=	*0*	kN
	$F_{perpend.;s;d}$	=	*1,5*	kN	$N_{comb2;c;s;d}$ (max. compression)	=	*0*	kN

Angle profile : *H65/65/6* (*1)

h	=	*65*	mm	I_y	=	*291871*	mm^4
b	=	*65*	mm	$W_{y;el;eff.1}$	=	*6215*	mm^3
t_f	=	*6*	mm	$W_{y;el;eff.2}$	=	*16182*	mm^3
y_s	=	*18,0*	mm	i_y	=	*19,7*	mm
A_{bruto}	=	*753*	mm^2	i_v	=	*12,5*	mm

Material :

Mat. qual. Fe360 / Fe510	=	*Fe360*		Permissible stress $f_{y;d}$	=	*235,0*	N/mm^2

Geometry section and bolts:

$L_{y;cr}$	=	*2163*	mm	No. bolts / end / flange	=	*1*	
$L_{v;cr}$	=	*2163*	mm	Type of bolts M / "	=	*16*	
$L_{tot\ (with\ comb.\ buckling)}$	=	*0*	mm	End distance bolt e1	=	*25*	mm
$a^*L_{tot\ (with\ comb.\ buckling)}$	=	*0*	mm	Centre-centre spacing bolt s1	=	*70*	mm
$L_{perpendicular\ force}$	=	*2163*	mm	Edge distance bolt e2	=	*35*	mm
Position perpendicular force	=	*1*	(⌉=1, ⌋=2)	Boltquality 4.6/5.6/8.8/10.9	=	*4,6*	
Column profile?	=	*1*	no=1, yes=2	Rolled screw threads	=	*1*	
Thickness tie plate	=	*5*	mm	Dubble strap joint no=1, yes=2	=	*1*	

Summary checks :

1 - Check tension on member :

$UC_1 = N_{Ed} / N_{t.Rd}$ = **0,20** **< 1**

2 - Check perpendicular force on member :

$UC_2 = M_{Ed} / M_{c.Rd}$ = **0,56** **< 1**

3 - Check of the member slenderness :

$UC_3 = C_{max;buc} / C_{perm}$ = **173** **< 200 or 240**

4 - Check stress in member due to compression without excentricity:

$UC_4 = N_{E;d} / (C_{max;buc} \times N_{b;Rd})$ = **n.v.t.** **< 1**

5 - Check stress in member due to compression with excentricity:

$UC_{5-1} = N_{E;d} / (C_{max;buc} \times N_{b;Rd})$ = **0,06** **< 1**

$UC_{5-2} = N_{E;d} / N_{b;Rd} + k_{yy} \times (M_{y;Ed} + DM_{y;Ed}) / (C_{LT} \times M_{y;Rk})$ = **0,09** **< 1**

6 - Check stress with combined buckling of two sections:

$UC_{5-1} = N_{E;d} / (C_{max;buc} \times N_{b;Rd})$ = **n.v.t.** **< 1**

$UC_{5-2} = N_{E;d} / N_{b;Rd} + k_{yy} \times (M_{y;Ed} + DM_{y;Ed}) / (C_{LT} \times M_{y;Rk})$ = **n.v.t.** **< 1**

7 - Check shear stress boltconnection:

$UC_7 = F_{v;Ed} / F_{v;Rd}$ = **0,60** **< 1**

8 - Check bearing stress boltconnection:

$UC_8 = F_{b;Ed} / F_{b;Rd}$ = **0,68** **< 1**

Remarks:

The maximum increase of stress or totalstress is(*2) : **$U.C_{max}$ = 0,68 = 68%**

(*1) Eventually, with the checks of the stresses, the cross-section reduction method is used according to prEN 1993-1-5.

(*2) The total stress or increase of stress has been related to the permissible stress.

Revision :	0	A	B	C	D	E	F
Date :	5-feb-2014						
Name :	M. Glegola						
Checked :	J. Hollaar						

Referentienr :	13039140509	**Berekening :**	B.14008
Project	: 150 kV lijn Leiden - Zoetermeer		
Part	: mast 52		

D&C ENGINEERING

Check equal leg angle-members according to Eurocode 3, prEN 1993-1-1 : 2003

File prEN 1993-1-1.revB.xls d.d. 2-32012, JG

Check section: *Vak 11* *hor. voor en achtervlak*

Memberforces : **(Attention! pressure = "-" and tension ="+")**

Compression:	N_{Sd}	=	*0,0*	kN	***Combined forces diagonal:***			
Tension:	N_{Sd}	=	*56,9*	kN	$N_{comb1;c;s;d}$ (min. Compr. or tension)	=	*0*	kN
	$F_{perpend.;s;d}$	=	*0*	kN	$N_{comb2;c;s;d}$ (max. compression)	=	*0*	kN

Angle profile : *H50/40/5* (*1)

h	=	*50*	mm	I_y	=	*103800*	mm^4
b	=	*40*	mm	$W_{y;el;eff.1}$	=	*2638*	mm^3
t_f	=	*5*	mm	$W_{y;el;eff.2}$	=	*9746*	mm^3
y_s	=	*10,7*	mm	i_y	=	*15,6*	mm
A_{bruto}	=	*427*	mm^2	i_v	=	*8,4*	mm

Material :

Mat. qual. Fe360 / Fe510	=	*Fe360*		Permissible stress $f_{y;d}$	=	*235,0*	N/mm^2

Geometry section and bolts:

$L_{y;cr}$	=	*1231*	mm	No. bolts / end / flange	=	*4*	
$L_{v;cr}$	=	*1231*	mm	Type of bolts M / "	=	*16*	
$L_{tot\ (with\ comb.\ buckling)}$	=	*0*	mm	End distance bolt e1	=	*25*	mm
$a*L_{tot\ (with\ comb.\ buckling)}$	=	*0*	mm	Centre-centre spacing bolt s1	=	*50*	mm
$L_{perpendicular\ force}$	=	*0*	mm	Edge distance bolt e2	=	*22*	mm
Position perpendicular force	=	*1*	(⌉=1, ⌋=2)	Boltquality 4.6/5.6/8.8/10.9	=	*4,6*	
Column profile?	=	*1*	no=1, yes=2	Rolled screw threads	=	*1*	
Thickness tie plate	=	*8*	mm	Dubble strap joint no=1, yes=2	=	*1*	

Summary checks :

1 - Check tension on member :

$UC_1 = N_{Ed} / N_{t.Rd}$ = **1,12** **> 1 !!**

2 - Check perpendicular force on member :

$UC_2 = M_{Ed} / M_{c.Rd}$ = **n.v.t.** **< 1**

3 - Check of the member slenderness :

$UC_3 = C_{max;buc} / C_{perm}$ = **146** **< 200 or 240**

4 - Check stress in member due to compression without excentricity:

$UC_4 = N_{E;d} / (C_{max;buc} \times N_{b;Rd})$ = **0,00** **< 1**

5 - Check stress in member due to compression with excentricity:

$UC_{5-1} = N_{E;d} / (C_{max;buc} \times N_{b;Rd})$ = **n.v.t.** **< 1**

$UC_{5-2} = N_{E;d} / N_{b;Rd} + k_{yy} \times (M_{y;Ed} + DM_{y;Ed}) / (C_{LT} \times M_{y;Rk})$ = **n.v.t.** **< 1**

6 - Check stress with combined buckling of two sections:

$UC_{5-1} = N_{E;d} / (C_{max;buc} \times N_{b;Rd})$ = **n.v.t.** **< 1**

$UC_{5-2} = N_{E;d} / N_{b;Rd} + k_{yy} \times (M_{y;Ed} + DM_{y;Ed}) / (C_{LT} \times M_{y;Rk})$ = **n.v.t.** **< 1**

7 - Check shear stress boltconnection:

$UC_7 = F_{v;Ed} / F_{v;Rd}$ = **0,47** **< 1**

8 - Check bearing stress boltconnection:

$UC_8 = F_{b;Ed} / F_{b;Rd}$ = **0,77** **< 1**

Remarks:

The maximum increase of stress or totalstress is(*2) : **$U.C_{max}$ = 1,12 = 112%**

(*1) Eventually, with the checks of the stresses, the cross-section reduction method is used according to prEN 1993-1-5.

(*2) The total stress or increase of stress has been related to the permissible stress.

Revision :	0	A	B	C	D	E	F
Date :	5-feb-2014						
Name :	M. Glegola						
Checked :	J. Hollaar						

Referentienr :	13039140509	**Berekening :**	B.14008
Project	: 150 kV lijn Leiden - Zoetermeer		
Part	: mast 52		

D&C ENGINEERING

Check equal leg angle-members according to Eurocode 3, prEN 1993-1-1 : 2003

File prEN 1993-1-1.revB.xls d.d. 2-32012, JG

Check section: *Vak 11* *hor. voor en achtervlakjvlak* **verzwaard**

Memberforces : **(Attention! pressure = "-" and tension ="+")**

Compression:	N_{Sd}	=	*0,0*	kN	***Combined forces diagonal:***			
Tension:	N_{Sd}	=	*56,9*	kN	$N_{comb1;c;s;d}$ (min. Compr. or tension)	=	*0*	kN
	$F_{perpend.;s;d}$	=	*0*	kN	$N_{comb2;c;s;d}$ (max. compression)	=	*0*	kN

Angle profile : *H50/50/6* (*1)

h	=	*50*	mm	I_y	=	*128406*	mm^4
b	=	*50*	mm	$W_{y;el;eff.1}$	=	*3612*	mm^3
t_f	=	*6*	mm	$W_{y;el;eff.2}$	=	*8883*	mm^3
y_s	=	*14,5*	mm	i_y	=	*15,0*	mm
A_{bruto}	=	*569*	mm^2	i_v	=	*9,6*	mm

Material :

Mat. qual. Fe360 / Fe510	=	*Fe360*		Permissible stress $f_{y;d}$	=	*235,0*	N/mm^2

Geometry section and bolts:

$L_{y;cr}$	=	*1231*	mm	No. bolts / end / flange	=	*4*	
$L_{v;cr}$	=	*1231*	mm	Type of bolts M / "	=	*16*	
$L_{tot\ (with\ comb.\ buckling)}$	=	*0*	mm	End distance bolt e1	=	*25*	mm
$a^*L_{tot\ (with\ comb.\ buckling)}$	=	*0*	mm	Centre-centre spacing bolt s1	=	*50*	mm
$L_{perpendicular\ force}$	=	*0*	mm	Edge distance bolt e2	=	*22*	mm
Position perpendicular force	=	*1*	(⌉=1, ⌋=2)	Boltquality 4.6/5.6/8.8/10.9	=	*8,8*	
Column profile?	=	*1*	no=1, yes=2	Rolled screw threads	=	*1*	
Thickness tie plate	=	*8*	mm	Dubble strap joint no=1, yes=2	=	*1*	

Summary checks :

1 - Check tension on member :

$UC_1 = N_{Ed} / N_{t.Rd}$ = **0,82** **< 1**

2 - Check perpendicular force on member :

$UC_2 = M_{Ed} / M_{c.Rd}$ = **n.v.t.** **< 1**

3 - Check of the member slenderness :

$UC_3 = C_{max;buc} / C_{perm}$ = **128** **< 200 or 240**

4 - Check stress in member due to compression without excentricity:

$UC_4 = N_{E;d} / (C_{max;buc} \times N_{b;Rd})$ = **0,00** **< 1**

5 - Check stress in member due to compression with excentricity:

$UC_{5-1} = N_{E;d} / (C_{max;buc} \times N_{b;Rd})$ = **n.v.t.** **< 1**

$UC_{5-2} = N_{E;d} / N_{b;Rd} + k_{yy} \times (M_{y;Ed} + DM_{y;Ed}) / (C_{LT} \times M_{y;Rk})$ = **n.v.t.** **< 1**

6 - Check stress with combined buckling of two sections:

$UC_{5-1} = N_{E;d} / (C_{max;buc} \times N_{b;Rd})$ = **n.v.t.** **< 1**

$UC_{5-2} = N_{E;d} / N_{b;Rd} + k_{yy} \times (M_{y;Ed} + DM_{y;Ed}) / (C_{LT} \times M_{y;Rk})$ = **n.v.t.** **< 1**

7 - Check shear stress boltconnection:

$UC_7 = F_{v;Ed} / F_{v;Rd}$ = **0,24** **< 1**

8 - Check bearing stress boltconnection:

$UC_8 = F_{b;Ed} / F_{b;Rd}$ = **0,65** **< 1**

Remarks:

The maximum increase of stress or totalstress is(*2) : **$U.C_{max}$ = 0,82 = 82%**

(*1) Eventually, with the checks of the stresses, the cross-section reduction method is used according to prEN 1993-1-5.

(*2) The total stress or increase of stress has been related to the permissible stress.

Revision :	0	A	B	C	D	E	F
Date :	5-feb-2014						
Name :	M. Glegola						
Checked :	J. Hollaar						

Referentienr :	13039140509	**Berekening :**	B.14008
Project	: 150 kV lijn Leiden - Zoetermeer		
Part	: mast 52		

D&C ENGINEERING

Check equal leg angle-members according to Eurocode 3, prEN 1993-1-1 : 2003

File prEN 1993-1-1.revB.xls d.d. 2-32012, JG

Check section: *Vak 11* *hor. knikverkorters zijvlak*

Memberforces : **(Attention! pressure = "-" and tension ="+")**

Compression:	N_{Sd}	=	-13,88	kN	***Combined forces diagonal:***			
Tension:	N_{Sd}	=	0,00	kN	$N_{comb1;c;s;d}$ (min. Compr. or tension)	=	0	kN
	$F_{perpend.;s;d}$	=	1,5	kN	$N_{comb2;c;s;d}$ (max. compression)	=	0	kN

Angle profile : *H45/45/5* (*1)

h	=	45	mm	I_y	=	78410	mm^4
b	=	45	mm	$W_{y;el;eff.1}$	=	2435	mm^3
t_f	=	5	mm	$W_{y;el;eff.2}$	=	6129	mm^3
y_s	=	12,8	mm	i_y	=	13,5	mm
A_{bruto}	=	430	mm^2	i_v	=	8,6	mm

Material :

Mat. qual. Fe360 / Fe510	=	Fe360		Permissible stress $f_{y;d}$	=	235,0	N/mm^2

Geometry section and bolts:

$L_{y;cr}$	=	996	mm	No. bolts / end / flange	=	1	
$L_{v;cr}$	=	996	mm	Type of bolts M / "	=	16	
$L_{tot\ (with\ comb.\ buckling)}$	=	0	mm	End distance bolt e1	=	25	mm
$a*L_{tot\ (with\ comb.\ buckling)}$	=	0	mm	Centre-centre spacing bolt s1	=	70	mm
$L_{perpendicular\ force}$	=	996	mm	Edge distance bolt e2	=	35	mm
Position perpendicular force	=	1	(⌉=1, ⌋=2)	Boltquality 4.6/5.6/8.8/10.9	=	4,6	
Column profile?	=	1	no=1, yes=2	Rolled screw threads	=	1	
Thickness tie plate	=	5	mm	Dubble strap joint no=1, yes=2	=	1	

Summary checks :

1 - Check tension on member :

$UC_1 = N_{Ed} / N_{t.Rd}$ = **0,00** **< 1**

2 - Check perpendicular force on member :

$UC_2 = M_{Ed} / M_{c.Rd}$ = **0,65** **< 1**

3 - Check of the member slenderness :

$UC_3 = C_{max;buc} / C_{perm}$ = **116** **< 200 or 240**

4 - Check stress in member due to compression without excentricity:

$UC_4 = N_{E;d} / (C_{max;buc} \times N_{b;Rd})$ = **n.v.t.** **< 1**

5 - Check stress in member due to compression with excentricity:

$UC_{5-1} = N_{E;d} / (C_{max;buc} \times N_{b;Rd})$ = **0,30** **< 1**

$UC_{5-2} = N_{E;d} / N_{b;Rd} + k_{yy} \times (M_{y;Ed} + DM_{y;Ed}) / (C_{LT} \times M_{y;Rk})$ = **0,51** **< 1**

6 - Check stress with combined buckling of two sections:

$UC_{5-1} = N_{E;d} / (C_{max;buc} \times N_{b;Rd})$ = **n.v.t.** **< 1**

$UC_{5-2} = N_{E;d} / N_{b;Rd} + k_{yy} \times (M_{y;Ed} + DM_{y;Ed}) / (C_{LT} \times M_{y;Rk})$ = **n.v.t.** **< 1**

7 - Check shear stress boltconnection:

$UC_7 = F_{v;Ed} / F_{v;Rd}$ = **0,46** **< 1**

8 - Check bearing stress boltconnection:

$UC_8 = F_{b;Ed} / F_{b;Rd}$ = **0,24** **< 1**

Remarks:

The maximum increase of stress or totalstress is(*2) : **$U.C_{max}$ = 0,65 = 65%**

(*1) Eventually, with the checks of the stresses, the cross-section reduction method is used according to prEN 1993-1-5.

(*2) The total stress or increase of stress has been related to the permissible stress.

Revision :	0	A	B	C	D	E	F
Date :	5-feb-2014						
Name :	M. Glegola						
Checked :	J. Hollaar						

Referentienr :	13039140509	**Berekening :**	B.14008
Project	: 150 kV lijn Leiden - Zoetermeer		
Part	: mast 52		

D&C ENGINEERING

Check equal leg angle-members according to Eurocode 3, prEN 1993-1-1 : 2003

File prEN 1993-1-1.revB.xls d.d. 2-32012, JG

Check section: *Vak 12* *bovenrand*

Memberforces : **(Attention! pressure = "-" and tension ="+")**

Compression:	N_{Sd}	=	*-75,6*	kN	***Combined forces diagonal:***			
Tension:	N_{Sd}	=	*117,4*	kN	$N_{comb1;c;s;d}$ (min. Compr. or tension)	=	*0*	kN
	$F_{perpend.;s;d}$	=	*0*	kN	$N_{comb2;c;s;d}$ (max. compression)	=	*0*	kN

Angle profile : *H100/100/8* (*1)

h	=	*100*	mm	I_y	=	*1448424*	mm^4
b	=	*100*	mm	$W_{y;el;eff.1}$	=	*19942*	mm^3
t_f	=	*8*	mm	$W_{y;el;eff.2}$	=	*52924*	mm^3
y_s	=	*27,4*	mm	i_y	=	*30,6*	mm
A_{bruto}	=	*1551*	mm^2	i_v	=	*19,4*	mm

Material :

Mat. qual. Fe360 / Fe510	=	*Fe360*		Permissible stress $f_{y;d}$	=	*235,0*	N/mm^2

Geometry section and bolts:

$L_{y;cr}$	=	*2750*	mm	No. bolts / end / flange	=	*3*	
$L_{v;cr}$	=	*2750*	mm	Type of bolts M / "	=	*24*	
$L_{tot\ (with\ comb.\ buckling)}$	=	*0*	mm	End distance bolt e1	=	*35*	mm
$a^*L_{tot\ (with\ comb.\ buckling)}$	=	*0*	mm	Centre-centre spacing bolt s1	=	*70*	mm
$L_{perpendicular\ force}$	=	*0*	mm	Edge distance bolt e2	=	*35*	mm
Position perpendicular force	=	*1*	(⌉=1, ⌋=2)	Boltquality 4.6/5.6/8.8/10.9	=	*4,6*	
Column profile?	=	*1*	no=1, yes=2	Rolled screw threads	=	*1*	
Thickness tie plate	=	*10*	mm	Dubble strap joint no=1, yes=2	=	*1*	

Summary checks :

1 - Check tension on member :

$UC_1 = N_{Ed} / N_{t.Rd}$ = **0,59** **< 1**

2 - Check perpendicular force on member :

$UC_2 = M_{Ed} / M_{c.Rd}$ = **n.v.t.** **< 1**

3 - Check of the member slenderness :

$UC_3 = C_{max;buc} / C_{perm}$ = **142** **< 200 or 240**

4 - Check stress in member due to compression without excentricity:

$UC_4 = N_{E;d} / (C_{max;buc} \times N_{b;Rd})$ = **0,55** **< 1**

5 - Check stress in member due to compression with excentricity:

$UC_{5-1} = N_{E;d} / (C_{max;buc} \times N_{b;Rd})$ = **n.v.t.** **< 1**

$UC_{5-2} = N_{E;d} / N_{b;Rd} + k_{yy} \times (M_{y;Ed} + DM_{y;Ed}) / (C_{LT} \times M_{y;Rk})$ = **n.v.t.** **< 1**

6 - Check stress with combined buckling of two sections:

$UC_{5-1} = N_{E;d} / (C_{max;buc} \times N_{b;Rd})$ = **n.v.t.** **< 1**

$UC_{5-2} = N_{E;d} / N_{b;Rd} + k_{yy} \times (M_{y;Ed} + DM_{y;Ed}) / (C_{LT} \times M_{y;Rk})$ = **n.v.t.** **< 1**

7 - Check shear stress boltconnection:

$UC_7 = F_{v;Ed} / F_{v;Rd}$ = **0,58** **< 1**

8 - Check bearing stress boltconnection:

$UC_8 = F_{b;Ed} / F_{b;Rd}$ = **0,76** **< 1**

Remarks:

The maximum increase of stress or totalstress is(*2) : **$U.C_{max}$ = 0,76 = 76%**

(*1) Eventually, with the checks of the stresses, the cross-section reduction method is used according to prEN 1993-1-5.

(*2) The total stress or increase of stress has been related to the permissible stress.

Revision :	0	A	B	C	D	E	F
Date :	5-feb-2014						
Name :	M. Glegola						
Checked :	J. Hollaar						

Referentienr :	13039140509	**Berekening :**	B.14008
Project	: 150 kV lijn Leiden - Zoetermeer		
Part	: mast 52		

D&C ENGINEERING

Check equal leg angle-members according to Eurocode 3, prEN 1993-1-1 : 2003

File prEN 1993-1-1.revB.xls d.d. 2-32012, JG

Check section: *Vak 12* *diagonalen ondervlak*

Memberforces : **(Attention! pressure = "-" and tension ="+")**

Compression:	N_{Sd}	=	-14,1	kN	***Combined forces diagonal:***			
Tension:	N_{Sd}	=	11,3	kN	$N_{comb1;c;s;d}$ (min. Compr. or tension)	=	0	kN
	$F_{perpend.;s;d}$	=	0	kN	$N_{comb2;c;s;d}$ (max. compression)	=	0	kN

Angle profile : *H55/55/5* (*1)

h	=	55	mm	I_y	=	147150	mm^4
b	=	55	mm	$W_{y;el;eff.1}$	=	3697	mm^3
t_f	=	5	mm	$W_{y;el;eff.2}$	=	9685	mm^3
y_s	=	15,2	mm	i_y	=	16,6	mm
A_{bruto}	=	532	mm^2	i_v	=	10,5	mm

Material :

Mat. qual. Fe360 / Fe510	=	Fe360		Permissible stress $f_{y;d}$	=	235,0	N/mm^2

Geometry section and bolts:

$L_{y;cr}$	=	1500	mm	No. bolts / end / flange	=	1	
$L_{v;cr}$	=	1500	mm	Type of bolts M / "	=	24	
$L_{tot\ (with\ comb.\ buckling)}$	=	0	mm	End distance bolt e1	=	40	mm
$a^*L_{tot\ (with\ comb.\ buckling)}$	=	0	mm	Centre-centre spacing bolt s1	=	50	mm
$L_{perpendicular\ force}$	=	0	mm	Edge distance bolt e2	=	22	mm
Position perpendicular force	=	1	(⌉=1, ⌋=2)	Boltquality 4.6/5.6/8.8/10.9	=	4,6	
Column profile?	=	1	no=1, yes=2	Rolled screw threads	=	1	
Thickness tie plate	=	8	mm	Dubble strap joint no=1, yes=2	=	1	

Summary checks :

1 - Check tension on member :

$UC_1 = N_{Ed} / N_{t.Rd}$ = **0,43** **< 1**

2 - Check perpendicular force on member :

$UC_2 = M_{Ed} / M_{c.Rd}$ = **n.v.t.** **< 1**

3 - Check of the member slenderness :

$UC_3 = C_{max;buc} / C_{perm}$ = **142** **< 200 or 240**

4 - Check stress in member due to compression without excentricity:

$UC_4 = N_{E;d} / (C_{max;buc} \times N_{b;Rd})$ = **n.v.t.** **< 1**

5 - Check stress in member due to compression with excentricity:

$UC_{5-1} = N_{E;d} / (C_{max;buc} \times N_{b;Rd})$ = **0,33** **< 1**

$UC_{5-2} = N_{E;d} / N_{b;Rd} + k_{yy} \times (M_{y;Ed} + DM_{y;Ed}) / (C_{LT} \times M_{y;Rk})$ = **0,50** **< 1**

6 - Check stress with combined buckling of two sections:

$UC_{5-1} = N_{E;d} / (C_{max;buc} \times N_{b;Rd})$ = **n.v.t.** **< 1**

$UC_{5-2} = N_{E;d} / N_{b;Rd} + k_{yy} \times (M_{y;Ed} + DM_{y;Ed}) / (C_{LT} \times M_{y;Rk})$ = **n.v.t.** **< 1**

7 - Check shear stress boltconnection:

$UC_7 = F_{v;Ed} / F_{v;Rd}$ = **0,21** **< 1**

8 - Check bearing stress boltconnection:

$UC_8 = F_{b;Ed} / F_{b;Rd}$ = **0,95** **< 1**

Remarks:

The maximum increase of stress or totalstress is(*2) : **$U.C_{max}$ = 0,95 = 95%**

(*1) Eventually, with the checks of the stresses, the cross-section reduction method is used according to prEN 1993-1-5.

(*2) The total stress or increase of stress has been related to the permissible stress.

Revision :	0	A	B	C	D	E	F
Date :	5-feb-2014						
Name :	M. Glegola						
Checked :	J. Hollaar						

Referentienr :	13039140509	**Berekening :**	B.14008
Project	: 150 kV lijn Leiden - Zoetermeer		
Part	: mast 52		

D&C ENGINEERING

Check equal leg angle-members according to Eurocode 3, prEN 1993-1-1 : 2003

File prEN 1993-1-1.revB.xls d.d. 2-32012, JG

Check section: *Vak 12* *diagonalen v.v en a.v*

Memberforces : **(Attention! pressure = "-" and tension ="+")**

Compression:	N_{Sd}	=	-63,9	kN	***Combined forces diagonal:***			
Tension:	N_{Sd}	=	13,2	kN	$N_{comb1;c;s;d}$ (min. Compr. or tension)	=	0	kN
	$F_{perpend.;s;d}$	=	0	kN	$N_{comb2;c;s;d}$ (max. compression)	=	0	kN

Angle profile : *H100/100/6* (*1)

h	=	100	mm	I_y	=	680089	mm^4
b	=	100	mm	$W_{y;el;eff.1}$	=	11071	mm^3
t_f	=	6	mm	$W_{y;el;eff.2}$	=	29775	mm^3
y_s	=	22,8	mm	i_y	=	26,0	mm
A_{bruto}	=	1006	mm^2	i_v	=	16,6	mm

Material :

Mat. qual. Fe360 / Fe510	=	Fe360		Permissible stress $f_{y;d}$	=	235,0	N/mm^2

Geometry section and bolts:

$L_{y;cr}$	=	2363	mm	No. bolts / end / flange	=	2	
$L_{v;cr}$	=	2363	mm	Type of bolts M / "	=	24	
$L_{tot\ (with\ comb.\ buckling)}$	=	0	mm	End distance bolt e1	=	35	mm
$a*L_{tot\ (with\ comb.\ buckling)}$	=	0	mm	Centre-centre spacing bolt s1	=	70	mm
$L_{perpendicular\ force}$	=	0	mm	Edge distance bolt e2	=	35	mm
Position perpendicular force	=	1	(⌉=1, ⌋=2)	Boltquality 4.6/5.6/8.8/10.9	=	4,6	
Column profile?	=	1	no=1, yes=2	Rolled screw threads	=	1	
Thickness tie plate	=	10	mm	Dubble strap joint no=1, yes=2	=	1	

Summary checks :

1 - Check tension on member :

$UC_1 = N_{Ed} / N_{t.Rd}$ = **0,13** **< 1**

2 - Check perpendicular force on member :

$UC_2 = M_{Ed} / M_{c.Rd}$ = **n.v.t.** **< 1**

3 - Check of the member slenderness :

$UC_3 = C_{max;buc} / C_{perm}$ = **142** **< 200 or 240**

4 - Check stress in member due to compression without excentricity:

$UC_4 = N_{E;d} / (C_{max;buc} \times N_{b;Rd})$ = **0,72** **< 1**

5 - Check stress in member due to compression with excentricity:

$UC_{5-1} = N_{E;d} / (C_{max;buc} \times N_{b;Rd})$ = **n.v.t.** **< 1**

$UC_{5-2} = N_{E;d} / N_{b;Rd} + k_{yy} \times (M_{y;Ed} + DM_{y;Ed}) / (C_{LT} \times M_{y;Rk})$ = **n.v.t.** **< 1**

6 - Check stress with combined buckling of two sections:

$UC_{5-1} = N_{E;d} / (C_{max;buc} \times N_{b;Rd})$ = **n.v.t.** **< 1**

$UC_{5-2} = N_{E;d} / N_{b;Rd} + k_{yy} \times (M_{y;Ed} + DM_{y;Ed}) / (C_{LT} \times M_{y;Rk})$ = **n.v.t.** **< 1**

7 - Check shear stress boltconnection:

$UC_7 = F_{v;Ed} / F_{v;Rd}$ = **0,47** **< 1**

8 - Check bearing stress boltconnection:

$UC_8 = F_{b;Ed} / F_{b;Rd}$ = **0,58** **< 1**

Remarks:

The maximum increase of stress or totalstress is(*2) : **$U.C_{max}$ = 0,72 = 72%**

(*1) Eventually, with the checks of the stresses, the cross-section reduction method is used according to prEN 1993-1-5.

(*2) The total stress or increase of stress has been related to the permissible stress.

Revision :	0	A	B	C	D	E	F
Date :	5-feb-2014						
Name :	M. Glegola						
Checked :	J. Hollaar						

Referentienr :	13039140509	**Berekening :**	B.14008
Project	: 150 kV lijn Leiden - Zoetermeer		
Part	: mast 52		

D&C ENGINEERING

Check equal leg angle-members according to Eurocode 3, prEN 1993-1-1 : 2003

File prEN 1993-1-1.revB.xls d.d. 2-32012, JG

Check section: *Vak 12* *diagonalenv.v en a.v*

Memberforces : **(Attention! pressure = "-" and tension ="+")**

Compression:	N_{Sd}	=	*-46,8*	kN	***Combined forces diagonal:***			
Tension:	N_{Sd}	=	*43,1*	kN	$N_{comb1;c;s;d}$ (min. Compr. or tension)	=	*0*	kN
	$F_{perpend.;s;d}$	=	*0*	kN	$N_{comb2;c;s;d}$ (max. compression)	=	*0*	kN

Angle profile : *H90/90/6* (*1)

h	=	*90*	mm	I_y	=	*605764*	mm^4
b	=	*90*	mm	$W_{y;el;eff.1}$	=	*10255*	mm^3
t_f	=	*6*	mm	$W_{y;el;eff.2}$	=	*27352*	mm^3
y_s	=	*22,1*	mm	i_y	=	*25,1*	mm
A_{bruto}	=	*965*	mm^2	i_v	=	*16,0*	mm

Material :

Mat. qual. Fe360 / Fe510	=	*Fe360*		Permissible stress $f_{y;d}$	=	*235,0*	N/mm^2

Geometry section and bolts:

$L_{y;cr}$	=	*2819*	mm	No. bolts / end / flange	=	*1*	
$L_{v;cr}$	=	*2819*	mm	Type of bolts M / "	=	*24*	
$L_{tot\ (with\ comb.\ buckling)}$	=	*0*	mm	End distance bolt e1	=	*40*	mm
$a*L_{tot\ (with\ comb.\ buckling)}$	=	*0*	mm	Centre-centre spacing bolt s1	=	*50*	mm
$L_{perpendicular\ force}$	=	*0*	mm	Edge distance bolt e2	=	*40*	mm
Position perpendicular force	=	*1*	(⌉=1, ⌋=2)	Boltquality 4.6/5.6/8.8/10.9	=	*4,6*	
Column profile?	=	*1*	no=1, yes=2	Rolled screw threads	=	*1*	
Thickness tie plate	=	*6*	mm	Dubble strap joint no=1, yes=2	=	*1*	

Summary checks :

1 - Check tension on member :

$UC_1 = N_{Ed} / N_{t.Rd}$ = **0,46** **< 1**

2 - Check perpendicular force on member :

$UC_2 = M_{Ed} / M_{c.Rd}$ = **n.v.t.** **< 1**

3 - Check of the member slenderness :

$UC_3 = C_{max;buc} / C_{perm}$ = **176** **< 200 or 240**

4 - Check stress in member due to compression without excentricity:

$UC_4 = N_{E;d} / (C_{max;buc} \times N_{b;Rd})$ = **n.v.t.** **< 1**

5 - Check stress in member due to compression with excentricity:

$UC_{5-1} = N_{E;d} / (C_{max;buc} \times N_{b;Rd})$ = **0,88** **< 1**

$UC_{5-2} = N_{E;d} / N_{b;Rd} + k_{yy} \times (M_{y;Ed} + DM_{y;Ed}) / (C_{LT} \times M_{y;Rk})$ = **1,20** **> 1 !!**

6 - Check stress with combined buckling of two sections:

$UC_{5-1} = N_{E;d} / (C_{max;buc} \times N_{b;Rd})$ = **n.v.t.** **< 1**

$UC_{5-2} = N_{E;d} / N_{b;Rd} + k_{yy} \times (M_{y;Ed} + DM_{y;Ed}) / (C_{LT} \times M_{y;Rk})$ = **n.v.t.** **< 1**

7 - Check shear stress boltconnection:

$UC_7 = F_{v;Ed} / F_{v;Rd}$ = **0,69** **< 1**

8 - Check bearing stress boltconnection:

$UC_8 = F_{b;Ed} / F_{b;Rd}$ = **0,81** **< 1**

Remarks:

The maximum increase of stress or totalstress is(*2) : **$U.C_{max}$ = 1,20 = 120%**

(*1) Eventually, with the checks of the stresses, the cross-section reduction method is used according to prEN 1993-1-5.

(*2) The total stress or increase of stress has been related to the permissible stress.

Revision :	0	A	B	C	D	E	F
Date :	5-feb-2014						
Name :	M. Glegola						
Checked :	J. Hollaar						

Referentienr :	13039140509	**Berekening :**	B.14008
Project	: 150 kV lijn Leiden - Zoetermeer		
Part	: mast 52		

D&C ENGINEERING

Check equal leg angle-members according to Eurocode 3, prEN 1993-1-1 : 2003

File prEN 1993-1-1.revB.xls d.d. 2-32012, JG

Check section: *Vak 12 - diagonalen voor-en achtervlak L90x6* **verzwaard**

Memberforces : **(Attention! pressure = "-" and tension ="+")**

Compression:	N_{Sd}	=	*-46,8*	kN	***Combined forces diagonal:***			
Tension:	N_{Sd}	=	*43,1*	kN	$N_{comb1;c;s;d}$ (min. Compr. or tension)	=	*0*	kN
	$F_{perpend.;s;d}$	=	*0*	kN	$N_{comb2;c;s;d}$ (max. compression)	=	*0*	kN

Angle profile : *H90/90/8* (*1)

h	=	*90*	mm	I_y	=	*1043824*	mm^4
b	=	*90*	mm	$W_{y;el;eff.1}$	=	*16050*	mm^3
t_f	=	*8*	mm	$W_{y;el;eff.2}$	=	*41812*	mm^3
y_s	=	*25,0*	mm	i_y	=	*27,4*	mm
A_{bruto}	=	*1389*	mm^2	i_v	=	*17,4*	mm

Material :

Mat. qual. Fe360 / Fe510	=	*Fe360*		Permissible stress $f_{y;d}$	=	*235,0*	N/mm^2

Geometry section and bolts:

$L_{y;cr}$	=	*2819*	mm	No. bolts / end / flange	=	*1*	
$L_{v;cr}$	=	*2819*	mm	Type of bolts M / "	=	*24*	
$L_{tot\ (with\ comb.\ buckling)}$	=	*0*	mm	End distance bolt e1	=	*40*	mm
$a^*L_{tot\ (with\ comb.\ buckling)}$	=	*0*	mm	Centre-centre spacing bolt s1	=	*80*	mm
$L_{perpendicular\ force}$	=	*0*	mm	Edge distance bolt e2	=	*40*	mm
Position perpendicular force	=	*1*	(⌉=1, ⌋=2)	Boltquality 4.6/5.6/8.8/10.9	=	*4,6*	
Column profile?	=	*1*	no=1, yes=2	Rolled screw threads	=	*1*	
Thickness tie plate	=	*6*	mm	Dubble strap joint no=1, yes=2	=	*1*	

Summary checks :

1 - Check tension on member :

$UC_1 = N_{Ed} / N_{t.Rd}$ = **0,35** **< 1**

2 - Check perpendicular force on member :

$UC_2 = M_{Ed} / M_{c.Rd}$ = **n.v.t.** **< 1**

3 - Check of the member slenderness :

$UC_3 = C_{max;buc} / C_{perm}$ = **162** **< 200 or 240**

4 - Check stress in member due to compression without excentricity:

$UC_4 = N_{E;d} / (C_{max;buc} \times N_{b;Rd})$ = **n.v.t.** **< 1**

5 - Check stress in member due to compression with excentricity:

$UC_{5-1} = N_{E;d} / (C_{max;buc} \times N_{b;Rd})$ = **0,53** **< 1**

$UC_{5-2} = N_{E;d} / N_{b;Rd} + k_{yy} \times (M_{y;Ed} + DM_{y;Ed}) / (C_{LT} \times M_{y;Rk})$ = **0,75** **< 1**

6 - Check stress with combined buckling of two sections:

$UC_{5-1} = N_{E;d} / (C_{max;buc} \times N_{b;Rd})$ = **n.v.t.** **< 1**

$UC_{5-2} = N_{E;d} / N_{b;Rd} + k_{yy} \times (M_{y;Ed} + DM_{y;Ed}) / (C_{LT} \times M_{y;Rk})$ = **n.v.t.** **< 1**

7 - Check shear stress boltconnection:

$UC_7 = F_{v;Ed} / F_{v;Rd}$ = **0,69** **< 1**

8 - Check bearing stress boltconnection:

$UC_8 = F_{b;Ed} / F_{b;Rd}$ = **0,81** **< 1**

Remarks:

The maximum increase of stress or totalstress is(*2) : **$U.C_{max}$ = 0,81 = 81%**

(*1) Eventually, with the checks of the stresses, the cross-section reduction method is used according to prEN 1993-1-5.

(*2) The total stress or increase of stress has been related to the permissible stress.

Revision :	0	A	B	C	D	E	F
Date :	5-feb-2014						
Name :	M. Glegola						
Checked :	J. Hollaar						

Referentienr :	13039140509	**Berekening :**	B.14008
Project	: 150 kV lijn Leiden - Zoetermeer		
Part	: mast 52		

D&C ENGINEERING

Check equal leg angle-members according to Eurocode 3, prEN 1993-1-1 : 2003

File prEN 1993-1-1.revB.xls d.d. 2-32012, JG

Check section: *Vak 12* *diagonalen v.v en a.v*

Memberforces : **(Attention! pressure = "-" and tension ="+")**

Compression:	N_{Sd}	=	-15,5	kN	***Combined forces diagonal:***			
Tension:	N_{Sd}	=	60,9	kN	$N_{comb1;c;s;d}$ (min. Compr. or tension)	=	0	kN
	$F_{perpend.;s;d}$	=	0	kN	$N_{comb2;c;s;d}$ (max. compression)	=	0	kN

Angle profile : *H50/40/5* (*1)

h	=	50	mm	I_y	=	103800	mm^4
b	=	40	mm	$W_{y;el;eff.1}$	=	2638	mm^3
t_f	=	5	mm	$W_{y;el;eff.2}$	=	9746	mm^3
y_s	=	10,7	mm	i_y	=	15,6	mm
A_{bruto}	=	427	mm^2	i_v	=	8,4	mm

Material :

Mat. qual. Fe360 / Fe510	=	Fe360		Permissible stress $f_{y;d}$	=	235,0	N/mm^2

Geometry section and bolts:

$L_{y;cr}$	=	2361	mm	No. bolts / end / flange	=	3	
$L_{v;cr}$	=	2361	mm	Type of bolts M / "	=	16	
$L_{tot\ (with\ comb.\ buckling)}$	=	0	mm	End distance bolt e1	=	25	mm
$a*L_{tot\ (with\ comb.\ buckling)}$	=	0	mm	Centre-centre spacing bolt s1	=	50	mm
$L_{perpendicular\ force}$	=	0	mm	Edge distance bolt e2	=	22	mm
Position perpendicular force	=	1	(⌉=1, ⌋=2)	Boltquality 4.6/5.6/8.8/10.9	=	4,6	
Column profile?	=	1	no=1, yes=2	Rolled screw threads	=	1	
Thickness tie plate	=	8	mm	Dubble strap joint no=1, yes=2	=	1	

Summary checks :

1 - Check tension on member :

$UC_1 = N_{Ed} / N_{t.Rd}$ = **1,20** **> 1 !!**

2 - Check perpendicular force on member :

$UC_2 = M_{Ed} / M_{c.Rd}$ = **n.v.t.** **< 1**

3 - Check of the member slenderness :

$UC_3 = C_{max;buc} / C_{perm}$ = **281** **< 200 or 240**

4 - Check stress in member due to compression without excentricity:

$UC_4 = N_{E;d} / (C_{max;buc} \times N_{b;Rd})$ = **1,06** **> 1 !!**

5 - Check stress in member due to compression with excentricity:

$UC_{5-1} = N_{E;d} / (C_{max;buc} \times N_{b;Rd})$ = **n.v.t.** **< 1**

$UC_{5-2} = N_{E;d} / N_{b;Rd} + k_{yy} \times (M_{y;Ed} + DM_{y;Ed}) / (C_{LT} \times M_{y;Rk})$ = **n.v.t.** **< 1**

6 - Check stress with combined buckling of two sections:

$UC_{5-1} = N_{E;d} / (C_{max;buc} \times N_{b;Rd})$ = **n.v.t.** **< 1**

$UC_{5-2} = N_{E;d} / N_{b;Rd} + k_{yy} \times (M_{y;Ed} + DM_{y;Ed}) / (C_{LT} \times M_{y;Rk})$ = **n.v.t.** **< 1**

7 - Check shear stress boltconnection:

$UC_7 = F_{v;Ed} / F_{v;Rd}$ = **0,67** **< 1**

8 - Check bearing stress boltconnection:

$UC_8 = F_{b;Ed} / F_{b;Rd}$ = **1,10** **> 1 !!**

Remarks:

The maximum increase of stress or totalstress is(*2) : **$U.C_{max}$ = 1,20 = 120%**

(*1) Eventually, with the checks of the stresses, the cross-section reduction method is used according to prEN 1993-1-5.

(*2) The total stress or increase of stress has been related to the permissible stress.

Revision :	0	A	B	C	D	E	F
Date :	5-feb-2014						
Name :	M. Glegola						
Checked :	J. Hollaar						

Referentienr :	13039140509	**Berekening :**	B.14008
Project	: 150 kV lijn Leiden - Zoetermeer		
Part	: mast 52		

D&C ENGINEERING

Check equal leg angle-members according to Eurocode 3, prEN 1993-1-1 : 2003

File prEN 1993-1-1.revB.xls d.d. 2-32012, JG

Check section: *Vak 12 - diagonalen voor-en achtervlak L50x40x5* **verzwaard**

Memberforces : **(Attention! pressure = "-" and tension ="+")**

Compression:	N_{Sd}	=	-15,5	kN	***Combined forces diagonal:***			
Tension:	N_{Sd}	=	60,9	kN	$N_{comb1;c;s;d}$ (min. Compr. or tension)	=	0	kN
	$F_{perpend.;s;d}$	=	0	kN	$N_{comb2;c;s;d}$ (max. compression)	=	0	kN

Angle profile : H50/50/8 (*1)

h	=	50	mm	I_y	=	162828	mm^4
b	=	50	mm	$W_{y;el;eff.1}$	=	4684	mm^3
t_f	=	8	mm	$W_{y;el;eff.2}$	=	10685	mm^3
y_s	=	15,2	mm	i_y	=	14,8	mm
A_{bruto}	=	741	mm^2	i_v	=	9,6	mm

Material :

Mat. qual. Fe360 / Fe510	=	Fe360		Permissible stress $f_{y;d}$	=	235,0	N/mm^2

Geometry section and bolts:

$L_{y;cr}$	=	2361	mm	No. bolts / end / flange	=	3	
$L_{v;cr}$	=	2361	mm	Type of bolts M / "	=	16	
$L_{tot\ (with\ comb.\ buckling)}$	=	0	mm	End distance bolt e1	=	25	mm
$a*L_{tot\ (with\ comb.\ buckling)}$	=	0	mm	Centre-centre spacing bolt s1	=	50	mm
$L_{perpendicular\ force}$	=	0	mm	Edge distance bolt e2	=	22	mm
Position perpendicular force	=	1	(⌉=1, ⌋=2)	Boltquality 4.6/5.6/8.8/10.9	=	8,8	
Column profile?	=	1	no=1, yes=2	Rolled screw threads	=	1	
Thickness tie plate	=	8	mm	Dubble strap joint no=1, yes=2	=	1	

Summary checks :

1 - Check tension on member :

$UC_1 = N_{Ed} / N_{t.Rd}$ = **0,68** **< 1**

2 - Check perpendicular force on member :

$UC_2 = M_{Ed} / M_{c.Rd}$ = **n.v.t.** **< 1**

3 - Check of the member slenderness :

$UC_3 = C_{max;buc} / C_{perm}$ = **246** **< 200 or 240**

4 - Check stress in member due to compression without excentricity:

$UC_4 = N_{E;d} / (C_{max;buc} \times N_{b;Rd})$ = **0,50** **< 1**

5 - Check stress in member due to compression with excentricity:

$UC_{5-1} = N_{E;d} / (C_{max;buc} \times N_{b;Rd})$ = **n.v.t.** **< 1**

$UC_{5-2} = N_{E;d} / N_{b;Rd} + k_{yy} \times (M_{y;Ed} + DM_{y;Ed}) / (C_{LT} \times M_{y;Rk})$ = **n.v.t.** **< 1**

6 - Check stress with combined buckling of two sections:

$UC_{5-1} = N_{E;d} / (C_{max;buc} \times N_{b;Rd})$ = **n.v.t.** **< 1**

$UC_{5-2} = N_{E;d} / N_{b;Rd} + k_{yy} \times (M_{y;Ed} + DM_{y;Ed}) / (C_{LT} \times M_{y;Rk})$ = **n.v.t.** **< 1**

7 - Check shear stress boltconnection:

$UC_7 = F_{v;Ed} / F_{v;Rd}$ = **0,34** **< 1**

8 - Check bearing stress boltconnection:

$UC_8 = F_{b;Ed} / F_{b;Rd}$ = **0,69** **< 1**

Remarks:

The maximum increase of stress or totalstress is(*2) : **$U.C_{max}$ = 0,69 = 69%**

(*1) Eventually, with the checks of the stresses, the cross-section reduction method is used according to prEN 1993-1-5.

(*2) The total stress or increase of stress has been related to the permissible stress.

Revision :	0	A	B	C	D	E	F
Date :	5-feb-2014						
Name :	M. Glegola						
Checked :	J. Hollaar						

Referentienr :	13039140509	**Berekening :**	B.14008
Project	: 150 kV lijn Leiden - Zoetermeer		
Part	: mast 52		

D&C ENGINEERING

Check equal leg angle-members according to Eurocode 3, prEN 1993-1-1 : 2003

File prEN 1993-1-1.revB.xls d.d. 2-32012, JG

Check section: *HV 1* *rand*

Memberforces : **(Attention! pressure = "-" and tension ="+")**

Compression:	N_{Sd}	=	*-120,7*	kN	***Combined forces diagonal:***			
Tension:	N_{Sd}	=	*92,2*	kN	$N_{comb1;c;s;d}$ (min. Compr. or tension)	=	*0*	kN
	$F_{perpend.;s;d}$	=	*1,5*	kN	$N_{comb2;c;s;d}$ (max. compression)	=	*0*	kN

Angle profile : *H120/120/11* (*1)

h	=	*120*	mm	I_y	=	*3406399*	mm^4
b	=	*120*	mm	$W_{y;el;eff.1}$	=	*39406*	mm^3
t_f	=	*11*	mm	$W_{y;el;eff.2}$	=	*101512*	mm^3
y_s	=	*33,6*	mm	i_y	=	*36,6*	mm
A_{bruto}	=	*2537*	mm^2	i_v	=	*23,3*	mm

Material :

Mat. qual. Fe360 / Fe510	=	*Fe360*		Permissible stress $f_{y;d}$	=	*235,0*	N/mm^2

Geometry section and bolts:

$L_{y;cr}$	=	*3800*	mm	No. bolts / end / flange	=	*2*	
$L_{v;cr}$	=	*3800*	mm	Type of bolts M / "	=	*24*	
$L_{tot\ (with\ comb.\ buckling)}$	=	*0*	mm	End distance bolt e1	=	*40*	mm
$a*L_{tot\ (with\ comb.\ buckling)}$	=	*0*	mm	Centre-centre spacing bolt s1	=	*70*	mm
$L_{perpendicular\ force}$	=	*3800*	mm	Edge distance bolt e2	=	*40*	mm
Position perpendicular force	=	*1*	(⌉=1, ⌋=2)	Boltquality 4.6/5.6/8.8/10.9	=	*4,6*	
Column profile?	=	*1*	no=1, yes=2	Rolled screw threads	=	*1*	
Thickness tie plate	=	*14*	mm	Dubble strap joint no=1, yes=2	=	*1*	

Summary checks :

1 - Check tension on member :

$UC_1 = N_{Ed} / N_{t.Rd}$ = **0,34** **< 1**

2 - Check perpendicular force on member :

$UC_2 = M_{Ed} / M_{c.Rd}$ = **0,15** **< 1**

3 - Check of the member slenderness :

$UC_3 = C_{max;buc} / C_{perm}$ = **163** **< 200 or 240**

4 - Check stress in member due to compression without excentricity:

$UC_4 = N_{E;d} / (C_{max;buc} \times N_{b;Rd})$ = **0,63** **< 1**

5 - Check stress in member due to compression with excentricity:

$UC_{5-1} = N_{E;d} / (C_{max;buc} \times N_{b;Rd})$ = **n.v.t.** **< 1**

$UC_{5-2} = N_{E;d} / N_{b;Rd} + k_{yy} \times (M_{y;Ed} + DM_{y;Ed}) / (C_{LT} \times M_{y;Rk})$ = **n.v.t.** **< 1**

6 - Check stress with combined buckling of two sections:

$UC_{5-1} = N_{E;d} / (C_{max;buc} \times N_{b;Rd})$ = **n.v.t.** **< 1**

$UC_{5-2} = N_{E;d} / N_{b;Rd} + k_{yy} \times (M_{y;Ed} + DM_{y;Ed}) / (C_{LT} \times M_{y;Rk})$ = **n.v.t.** **< 1**

7 - Check shear stress boltconnection:

$UC_7 = F_{v;Ed} / F_{v;Rd}$ = **0,89** **< 1**

8 - Check bearing stress boltconnection:

$UC_8 = F_{b;Ed} / F_{b;Rd}$ = **0,59** **< 1**

Remarks:

The maximum increase of stress or totalstress is(*2) : **$U.C_{max}$ = 0,89 = 89%**

(*1) Eventually, with the checks of the stresses, the cross-section reduction method is used according to prEN 1993-1-5.

(*2) The total stress or increase of stress has been related to the permissible stress.

Revision :	0	A	B	C	D	E	F
Date :	5-feb-2014						
Name :	M. Glegola						
Checked :	J. Hollaar						

Referentienr :	13039140509	**Berekening :**	B.14008
Project	: 150 kV lijn Leiden - Zoetermeer		
Part	: mast 52		

D&C ENGINEERING

Check equal leg angle-members according to Eurocode 3, prEN 1993-1-1 : 2003

File prEN 1993-1-1.revB.xls d.d. 2-32012, JG

Check section: *HV 1* *diagonalen*

Memberforces : **(Attention! pressure = "-" and tension ="+")**

Compression:	N_{Sd}	=	-2,7	kN	***Combined forces diagonal:***			
Tension:	N_{Sd}	=	1,8	kN	$N_{comb1;c;s;d}$ (min. Compr. or tension)	=	0	kN
	$F_{perpend.;s;d}$	=	1,5	kN	$N_{comb2;c;s;d}$ (max. compression)	=	0	kN

Angle profile : *H80/80/6* (*1)

h	=	80	mm	I_y	=	521007	mm^4
b	=	80	mm	$W_{y;el;eff.1}$	=	9280	mm^3
t_f	=	6	mm	$W_{y;el;eff.2}$	=	24509	mm^3
y_s	=	21,3	mm	i_y	=	23,9	mm
A_{bruto}	=	914	mm^2	i_v	=	15,3	mm

Material :

Mat. qual. Fe360 / Fe510	=	Fe360		Permissible stress $f_{y;d}$	=	235,0	N/mm^2

Geometry section and bolts:

$L_{y;cr}$	=	5374	mm	No. bolts / end / flange	=	1	
$L_{v;cr}$	=	5374	mm	Type of bolts M / "	=	20	
$L_{tot\ (with\ comb.\ buckling)}$	=	0	mm	End distance bolt e1	=	30	mm
$a*L_{tot\ (with\ comb.\ buckling)}$	=	0	mm	Centre-centre spacing bolt s1	=	70	mm
$L_{perpendicular\ force}$	=	5374	mm	Edge distance bolt e2	=	35	mm
Position perpendicular force	=	1	(⌉=1, ⌋=2)	Boltquality 4.6/5.6/8.8/10.9	=	4,6	
Column profile?	=	1	no=1, yes=2	Rolled screw threads	=	1	
Thickness tie plate	=	12	mm	Dubble strap joint no=1, yes=2	=	1	

Summary checks :

1 - Check tension on member :

$UC_1 = N_{Ed} / N_{t.Rd}$ = **0,02** **< 1**

2 - Check perpendicular force on member :

$UC_2 = M_{Ed} / M_{c.Rd}$ = **0,92** **< 1**

3 - Check of the member slenderness :

$UC_3 = C_{max;buc} / C_{perm}$ = **352** **< 200 or 240**

4 - Check stress in member due to compression without excentricity:

$UC_4 = N_{E;d} / (C_{max;buc} \times N_{b;Rd})$ = **n.v.t.** **< 1**

5 - Check stress in member due to compression with excentricity:

$UC_{5-1} = N_{E;d} / (C_{max;buc} \times N_{b;Rd})$ = **0,19** **< 1**

$UC_{5-2} = N_{E;d} / N_{b;Rd} + k_{yy} \times (M_{y;Ed} + DM_{y;Ed}) / (C_{LT} \times M_{y;Rk})$ = **0,22** **< 1**

6 - Check stress with combined buckling of two sections:

$UC_{5-1} = N_{E;d} / (C_{max;buc} \times N_{b;Rd})$ = **n.v.t.** **< 1**

$UC_{5-2} = N_{E;d} / N_{b;Rd} + k_{yy} \times (M_{y;Ed} + DM_{y;Ed}) / (C_{LT} \times M_{y;Rk})$ = **n.v.t.** **< 1**

7 - Check shear stress boltconnection:

$UC_7 = F_{v;Ed} / F_{v;Rd}$ = **0,06** **< 1**

8 - Check bearing stress boltconnection:

$UC_8 = F_{b;Ed} / F_{b;Rd}$ = **0,05** **< 1**

Remarks:

The maximum increase of stress or totalstress is(*2) : **$U.C_{max}$ = 0,92 = 92%**

(*1) Eventually, with the checks of the stresses, the cross-section reduction method is used according to prEN 1993-1-5.

(*2) The total stress or increase of stress has been related to the permissible stress.

Revision :	0	A	B	C	D	E	F
Date :	5-feb-2014						
Name :	M. Glegola						
Checked :	J. Hollaar						

Referentienr :	13039140509	**Berekening :**	B.14008
Project	: 150 kV lijn Leiden - Zoetermeer		
Part	: mast 52		

D&C ENGINEERING

Check equal leg angle-members according to Eurocode 3, prEN 1993-1-1 : 2003

File prEN 1993-1-1.revB.xls d.d. 2-32012, JG

Check section: *HV 2* *kruis*

Memberforces : **(Attention! pressure = "-" and tension ="+")**

Compression:	N_{Sd}	=	*-0,8*	kN	***Combined forces diagonal:***			
Tension:	N_{Sd}	=	*0,3*	kN	$N_{comb1;c;s;d}$ (min. Compr. or tension)	=	*0*	kN
	$F_{perpend.;s;d}$	=	*1,5*	kN	$N_{comb2;c;s;d}$ (max. compression)	=	*0*	kN

Angle profile : *H70/70/5* (*1)

h	=	*70*	mm	I_y	=	*268391*	mm^4
b	=	*70*	mm	$W_{y;el;eff.1}$	=	*5609*	mm^3
t_f	=	*5*	mm	$W_{y;el;eff.2}$	=	*14898*	mm^3
y_s	=	*18,0*	mm	i_y	=	*20,3*	mm
A_{bruto}	=	*651*	mm^2	i_v	=	*13,0*	mm

Material :

Mat. qual. Fe360 / Fe510	=	*Fe360*		Permissible stress $f_{y;d}$	=	*235,0*	N/mm^2

Geometry section and bolts:

$L_{y;cr}$	=	*7600*	mm	No. bolts / end / flange	=	*1*	
$L_{v;cr}$	=	*7600*	mm	Type of bolts M / "	=	*20*	
$L_{tot\ (with\ comb.\ buckling)}$	=	*0*	mm	End distance bolt	=	*30*	mm
$a^*L_{tot\ (with\ comb.\ buckling)}$	=	*0*	mm	Centre-centre spacing bolt s1	=	*70*	mm
$L_{perpendicular\ force}$	=	*7600*	mm	Edge distance bolt e2	=	*35*	mm
Position perpendicular force	=	*1*	(⌉=1, ⌋=2)	Boltquality 4.6/5.6/8.8/10.9	=	*4,6*	
Column profile?	=	*1*	no=1, yes=2	Rolled screw threads	=	*1*	
Thickness tie plate	=	*12*	mm	Dubble strap joint no=1, yes=2	=	*1*	

Summary checks :

1 - Check tension on member :

$UC_1 = N_{Ed} / N_{t.Rd}$ = **0,00** **< 1**

2 - Check perpendicular force on member :

$UC_2 = M_{Ed} / M_{c.Rd}$ = **2,16** **> 1 !!**

3 - Check of the member slenderness :

$UC_3 = C_{max;buc} / C_{perm}$ = **585** **< 200 or 240**

4 - Check stress in member due to compression without excentricity:

$UC_4 = N_{E;d} / (C_{max;buc} \times N_{b;Rd})$ = **n.v.t.** **< 1**

5 - Check stress in member due to compression with excentricity:

$UC_{5-1} = N_{E;d} / (C_{max;buc} \times N_{b;Rd})$ = **0,21** **< 1**

$UC_{5-2} = N_{E;d} / N_{b;Rd} + k_{yy} \times (M_{y;Ed} + DM_{y;Ed}) / (C_{LT} \times M_{y;Rk})$ = **0,23** **< 1**

6 - Check stress with combined buckling of two sections:

$UC_{5-1} = N_{E;d} / (C_{max;buc} \times N_{b;Rd})$ = **n.v.t.** **< 1**

$UC_{5-2} = N_{E;d} / N_{b;Rd} + k_{yy} \times (M_{y;Ed} + DM_{y;Ed}) / (C_{LT} \times M_{y;Rk})$ = **n.v.t.** **< 1**

7 - Check shear stress boltconnection:

$UC_7 = F_{v;Ed} / F_{v;Rd}$ = **0,02** **< 1**

8 - Check bearing stress boltconnection:

$UC_8 = F_{b;Ed} / F_{b;Rd}$ = **0,01** **< 1**

Remarks:

The maximum increase of stress or totalstress is(*2) : **$U.C_{max}$ = 2,16 = 216%**

(*1) Eventually, with the checks of the stresses, the cross-section reduction method is used according to prEN 1993-1-5.

(*2) The total stress or increase of stress has been related to the permissible stress.

Revision :	0	A	B	C	D	E	F
Date :	5-feb-2014						
Name :	M. Glegola						
Checked :	J. Hollaar						

Referentienr :	13039140509	**Berekening :**	B.14008
Project	: 150 kV lijn Leiden - Zoetermeer		
Part	: mast 52		

D&C ENGINEERING

Check equal leg angle-members according to Eurocode 3, prEN 1993-1-1 : 2003

File prEN 1993-1-1.revB.xls d.d. 2-32012, JG

Check section: *HV 2* *kruis* **verzwaard**

Memberforces : **(Attention! pressure = "-" and tension ="+")**

Compression:	N_{Sd}	=	-0,8	kN	***Combined forces diagonal:***			
Tension:	N_{Sd}	=	0,3	kN	$N_{comb1;c;s;d}$ (min. Compr. or tension)	=	0	kN
	$F_{perpend.;s;d}$	=	1,5	kN	$N_{comb2;c;s;d}$ (max. compression)	=	0	kN

Angle profile : *H80/80/10* (*1)

h	=	80	mm	I_y	=	875033	mm^4
b	=	80	mm	$W_{y;el;eff.1}$	=	15449	mm^3
t_f	=	10	mm	$W_{y;el;eff.2}$	=	37458	mm^3
y_s	=	23,4	mm	i_y	=	24,1	mm
A_{bruto}	=	1511	mm^2	i_v	=	15,4	mm

Material :

Mat. qual. Fe360 / Fe510	=	Fe360		Permissible stress $f_{y;d}$	=	235,0	N/mm^2

Geometry section and bolts:

$L_{y;cr}$	=	7600	mm	No. bolts / end / flange	=	1	
$L_{v;cr}$	=	7600	mm	Type of bolts M / "	=	20	
$L_{tot\ (with\ comb.\ buckling)}$	=	0	mm	End distance bolt	=	30	mm
$a^*L_{tot\ (with\ comb.\ buckling)}$	=	0	mm	Centre-centre spacing bolt s1	=	70	mm
$L_{perpendicular\ force}$	=	7600	mm	Edge distance bolt e2	=	35	mm
Position perpendicular force	=	1	(⌉=1, ⌋=2)	Boltquality 4.6/5.6/8.8/10.9	=	8,8	
Column profile?	=	1	no=1, yes=2	Rolled screw threads	=	1	
Thickness tie plate	=	12	mm	Dubble strap joint no=1, yes=2	=	1	

Summary checks :

1 - Check tension on member :

$UC_1 = N_{Ed} / N_{t.Rd}$ = **0,00** **< 1**

2 - Check perpendicular force on member :

$UC_2 = M_{Ed} / M_{c.Rd}$ = **0,79** **< 1**

3 - Check of the member slenderness :

$UC_3 = C_{max;buc} / C_{perm}$ = **493** **< 200 or 240**

4 - Check stress in member due to compression without excentricity:

$UC_4 = N_{E;d} / (C_{max;buc} \times N_{b;Rd})$ = **n.v.t.** **< 1**

5 - Check stress in member due to compression with excentricity:

$UC_{5-1} = N_{E;d} / (C_{max;buc} \times N_{b;Rd})$ = **0,07** **< 1**

$UC_{5-2} = N_{E;d} / N_{b;Rd} + k_{yy} \times (M_{y;Ed} + DM_{y;Ed}) / (C_{LT} \times M_{y;Rk})$ = **0,07** **< 1**

6 - Check stress with combined buckling of two sections:

$UC_{5-1} = N_{E;d} / (C_{max;buc} \times N_{b;Rd})$ = **n.v.t.** **< 1**

$UC_{5-2} = N_{E;d} / N_{b;Rd} + k_{yy} \times (M_{y;Ed} + DM_{y;Ed}) / (C_{LT} \times M_{y;Rk})$ = **n.v.t.** **< 1**

7 - Check shear stress boltconnection:

$UC_7 = F_{v;Ed} / F_{v;Rd}$ = **0,01** **< 1**

8 - Check bearing stress boltconnection:

$UC_8 = F_{b;Ed} / F_{b;Rd}$ = **0,01** **< 1**

Remarks:

The maximum increase of stress or totalstress is(*2) : **$U.C_{max}$ = 0,79 = 79%**

(*1) Eventually, with the checks of the stresses, the cross-section reduction method is used according to prEN 1993-1-5.

(*2) The total stress or increase of stress has been related to the permissible stress.

Revision :	0	A	B	C	D	E	F
Date :	5-feb-2014						
Name :	M. Glegola						
Checked :	J. Hollaar						

Referentienr :	13039140509	**Berekening :**	B.14008
Project	: 150 kV lijn Leiden - Zoetermeer		
Part	: mast 52		

D&C ENGINEERING

Check equal leg angle-members according to Eurocode 3, prEN 1993-1-1 : 2003

File prEN 1993-1-1.revB.xls d.d. 2-32012, JG

Check section: *HV 2* *randen voor- en achtervlak*

Memberforces : **(Attention! pressure = "-" and tension ="+")**

Compression:	N_{Sd}	=	*-189,9*	kN	***Combined forces diagonal:***			
Tension:	N_{Sd}	=	*130,9*	kN	$N_{comb1;c;s;d}$ (min. Compr. or tension)	=	*0*	kN
	$F_{perpend.;s;d}$	=	*1,5*	kN	$N_{comb2;c;s;d}$ (max. compression)	=	*0*	kN

Angle profile : *H110/110/10* (*1)

h	=	*110*	mm	I_y	=	*2386992*	mm^4
b	=	*110*	mm	$W_{y;el;eff.1}$	=	*30108*	mm^3
t_f	=	*10*	mm	$W_{y;el;eff.2}$	=	*77703*	mm^3
y_s	=	*30,7*	mm	i_y	=	*33,6*	mm
A_{bruto}	=	*2115*	mm^2	i_v	=	*21,3*	mm

Material :

Mat. qual. Fe360 / Fe510	=	*Fe360*		Permissible stress $f_{y;d}$	=	*235,0*	N/mm^2

Geometry section and bolts:

$L_{y;cr}$	=	*2500*	mm	No. bolts / end / flange	=	*2*	
$L_{v;cr}$	=	*2500*	mm	Type of bolts M / "	=	*24*	
$L_{tot\ (with\ comb.\ buckling)}$	=	*0*	mm	End distance bolt e1	=	*35*	mm
$a*L_{tot\ (with\ comb.\ buckling)}$	=	*0*	mm	Centre-centre spacing bolt s1	=	*70*	mm
$L_{perpendicular\ force}$	=	*2500*	mm	Edge distance bolt e2	=	*35*	mm
Position perpendicular force	=	*1*	(⌉=1, ⌋=2)	Boltquality 4.6/5.6/8.8/10.9	=	*4,6*	
Column profile?	=	*1*	no=1, yes=2	Rolled screw threads	=	*1*	
Thickness tie plate	=	*12*	mm	Dubble strap joint no=1, yes=2	=	*1*	

Summary checks :

1 - Check tension on member :

$UC_1 = N_{Ed} / N_{t.Rd}$ = **0,58** **< 1**

2 - Check perpendicular force on member :

$UC_2 = M_{Ed} / M_{c.Rd}$ = **0,13** **< 1**

3 - Check of the member slenderness :

$UC_3 = C_{max;buc} / C_{perm}$ = **117** **< 200 or 240**

4 - Check stress in member due to compression without excentricity:

$UC_4 = N_{E;d} / (C_{max;buc} \times N_{b;Rd})$ = **0,82** **< 1**

5 - Check stress in member due to compression with excentricity:

$UC_{5-1} = N_{E;d} / (C_{max;buc} \times N_{b;Rd})$ = **n.v.t.** **< 1**

$UC_{5-2} = N_{E;d} / N_{b;Rd} + k_{yy} \times (M_{y;Ed} + DM_{y;Ed}) / (C_{LT} \times M_{y;Rk})$ = **n.v.t.** **< 1**

6 - Check stress with combined buckling of two sections:

$UC_{5-1} = N_{E;d} / (C_{max;buc} \times N_{b;Rd})$ = **n.v.t.** **< 1**

$UC_{5-2} = N_{E;d} / N_{b;Rd} + k_{yy} \times (M_{y;Ed} + DM_{y;Ed}) / (C_{LT} \times M_{y;Rk})$ = **n.v.t.** **< 1**

7 - Check shear stress boltconnection:

$UC_7 = F_{v;Ed} / F_{v;Rd}$ = **1,40** **> 1 !!**

8 - Check bearing stress boltconnection:

$UC_8 = F_{b;Ed} / F_{b;Rd}$ = **1,02** **> 1 !!**

Remarks:

The maximum increase of stress or totalstress is(*2) : **$U.C_{max}$ = 1,40 = 140%**

(*1) Eventually, with the checks of the stresses, the cross-section reduction method is used according to prEN 1993-1-5.

(*2) The total stress or increase of stress has been related to the permissible stress.

Revision :	0	A	B	C	D	E	F
Date :	5-feb-2014						
Name :	M. Glegola						
Checked :	J. Hollaar						

Referentienr :	13039140509	**Berekening :**	B.14008
Project	: 150 kV lijn Leiden - Zoetermeer		
Part	: mast 52		

D&C ENGINEERING

Check equal leg angle-members according to Eurocode 3, prEN 1993-1-1 : 2003

File prEN 1993-1-1.revB.xls d.d. 2-32012, JG

Check section: *HV 2* *randen voor- en achtervlak* **verzwaard**

Memberforces : **(Attention! pressure = "-" and tension ="+")**

Compression:	N_{Sd}	=	*-189,7*	kN	***Combined forces diagonal:***			
Tension:	N_{Sd}	=	*130,9*	kN	$N_{comb1;c;s;d}$ (min. Compr. or tension)	=	*0*	kN
	$F_{perpend.;s;d}$	=	*1,5*	kN	$N_{comb2;c;s;d}$ (max. compression)	=	*0*	kN

Angle profile : *H110/110/12* (*1)

h	=	*110*	mm	I_y	=	*2798302*	mm^4
b	=	*110*	mm	$W_{y;el;eff.1}$	=	*35661*	mm^3
t_f	=	*12*	mm	$W_{y;el;eff.2}$	=	*88748*	mm^3
y_s	=	*31,5*	mm	i_y	=	*33,4*	mm
A_{bruto}	=	*2511*	mm^2	i_v	=	*21,3*	mm

Material :

Mat. qual. Fe360 / Fe510	=	*Fe360*		Permissible stress $f_{y;d}$	=	*235,0*	N/mm^2

Geometry section and bolts:

$L_{y;cr}$	=	*2500*	mm	No. bolts / end / flange	=	*2*	
$L_{v;cr}$	=	*2500*	mm	Type of bolts M / "	=	*24*	
$L_{tot\ (with\ comb.\ buckling)}$	=	*0*	mm	End distance bolt	=	*35*	mm
$a*L_{tot\ (with\ comb.\ buckling)}$	=	*0*	mm	Centre-centre spacing bolt s1	=	*70*	mm
$L_{perpendicular\ force}$	=	*2500*	mm	Edge distance bolt e2	=	*35*	mm
Position perpendicular force	=	*1*	(⌉=1, ⌋=2)	Boltquality 4.6/5.6/8.8/10.9	=	*8,8*	
Column profile?	=	*1*	no=1, yes=2	Rolled screw threads	=	*1*	
Thickness tie plate	=	*12*	mm	Dubble strap joint no=1, yes=2	=	*1*	

Summary checks :

1 - Check tension on member :

$UC_1 = N_{Ed} / N_{t.Rd}$ = **0,49** **< 1**

2 - Check perpendicular force on member :

$UC_2 = M_{Ed} / M_{c.Rd}$ = **0,11** **< 1**

3 - Check of the member slenderness :

$UC_3 = C_{max;buc} / C_{perm}$ = **117** **< 200 or 240**

4 - Check stress in member due to compression without excentricity:

$UC_4 = N_{E;d} / (C_{max;buc} \times N_{b;Rd})$ = **0,69** **< 1**

5 - Check stress in member due to compression with excentricity:

$UC_{5-1} = N_{E;d} / (C_{max;buc} \times N_{b;Rd})$ = **n.v.t.** **< 1**

$UC_{5-2} = N_{E;d} / N_{b;Rd} + k_{yy} \times (M_{y;Ed} + DM_{y;Ed}) / (C_{LT} \times M_{y;Rk})$ = **n.v.t.** **< 1**

6 - Check stress with combined buckling of two sections:

$UC_{5-1} = N_{E;d} / (C_{max;buc} \times N_{b;Rd})$ = **n.v.t.** **< 1**

$UC_{5-2} = N_{E;d} / N_{b;Rd} + k_{yy} \times (M_{y;Ed} + DM_{y;Ed}) / (C_{LT} \times M_{y;Rk})$ = **n.v.t.** **< 1**

7 - Check shear stress boltconnection:

$UC_7 = F_{v;Ed} / F_{v;Rd}$ = **0,70** **< 1**

8 - Check bearing stress boltconnection:

$UC_8 = F_{b;Ed} / F_{b;Rd}$ = **0,85** **< 1**

Remarks:

The maximum increase of stress or totalstress is(*2) : **$U.C_{max}$ = 0,85 = 85%**

(*1) Eventually, with the checks of the stresses, the cross-section reduction method is used according to prEN 1993-1-5.

(*2) The total stress or increase of stress has been related to the permissible stress.

Revision :	0	A	B	C	D	E	F
Date :	5-feb-2014						
Name :	M. Glegola						
Checked :	J. Hollaar						

Referentienr :	13039140509	**Berekening :**	B.14008
Project	: 150 kV lijn Leiden - Zoetermeer		
Part	: mast 52		

D&C ENGINEERING

Check equal leg angle-members according to Eurocode 3, prEN 1993-1-1 : 2003

File prEN 1993-1-1.revB.xls d.d. 2-32012, JG

Check section: *HV 2* *randen zijvlak*

Memberforces : **(Attention! pressure = "-" and tension ="+")**

Compression:	N_{Sd}	=	-12,3	kN	***Combined forces diagonal:***			
Tension:	N_{Sd}	=	16,3	kN	$N_{comb1;c;s;d}$ (min. Compr. or tension)	=	0	kN
	$F_{perpend.;s;d}$	=	1,5	kN	$N_{comb2;c;s;d}$ (max. compression)	=	0	kN

Angle profile : *H80/80/6* (*1)

h	=	80	mm	I_y	=	521007	mm^4
b	=	80	mm	$W_{y;el;eff.1}$	=	9280	mm^3
t_f	=	6	mm	$W_{y;el;eff.2}$	=	24509	mm^3
y_s	=	21,3	mm	i_y	=	23,9	mm
A_{bruto}	=	914	mm^2	i_v	=	15,3	mm

Material :

Mat. qual. Fe360 / Fe510	=	Fe360		Permissible stress $f_{y;d}$	=	235,0	N/mm^2

Geometry section and bolts:

$L_{y;cr}$	=	2500	mm	No. bolts / end / flange	=	1	
$L_{v;cr}$	=	2500	mm	Type of bolts M / "	=	20	
$L_{tot\ (with\ comb.\ buckling)}$	=	0	mm	End distance bolt	=	30	mm
$a*L_{tot\ (with\ comb.\ buckling)}$	=	0	mm	Centre-centre spacing bolt s1	=	70	mm
$L_{perpendicular\ force}$	=	2500	mm	Edge distance bolt e2	=	35	mm
Position perpendicular force	=	1	(⌉=1, ⌋=2)	Boltquality 4.6/5.6/8.8/10.9	=	4,6	
Column profile?	=	1	no=1, yes=2	Rolled screw threads	=	1	
Thickness tie plate	=	12	mm	Dubble strap joint no=1, yes=2	=	1	

Summary checks :

1 - Check tension on member :

$UC_1 = N_{Ed} / N_{t.Rd}$ = **0,20** **< 1**

2 - Check perpendicular force on member :

$UC_2 = M_{Ed} / M_{c.Rd}$ = **0,43** **< 1**

3 - Check of the member slenderness :

$UC_3 = C_{max;buc} / C_{perm}$ = **164** **< 200 or 240**

4 - Check stress in member due to compression without excentricity:

$UC_4 = N_{E;d} / (C_{max;buc} \times N_{b;Rd})$ = **n.v.t.** **< 1**

5 - Check stress in member due to compression with excentricity:

$UC_{5-1} = N_{E;d} / (C_{max;buc} \times N_{b;Rd})$ = **0,22** **< 1**

$UC_{5-2} = N_{E;d} / N_{b;Rd} + k_{yy} \times (M_{y;Ed} + DM_{y;Ed}) / (C_{LT} \times M_{y;Rk})$ = **0,31** **< 1**

6 - Check stress with combined buckling of two sections:

$UC_{5-1} = N_{E;d} / (C_{max;buc} \times N_{b;Rd})$ = **n.v.t.** **< 1**

$UC_{5-2} = N_{E;d} / N_{b;Rd} + k_{yy} \times (M_{y;Ed} + DM_{y;Ed}) / (C_{LT} \times M_{y;Rk})$ = **n.v.t.** **< 1**

7 - Check shear stress boltconnection:

$UC_7 = F_{v;Ed} / F_{v;Rd}$ = **0,35** **< 1**

8 - Check bearing stress boltconnection:

$UC_8 = F_{b;Ed} / F_{b;Rd}$ = **0,41** **< 1**

Remarks:

The maximum increase of stress or totalstress is(*2) : **$U.C_{max}$ = 0,43 = 43%**

(*1) Eventually, with the checks of the stresses, the cross-section reduction method is used according to prEN 1993-1-5.

(*2) The total stress or increase of stress has been related to the permissible stress.

Revision :	0	A	B	C	D	E	F
Date :	5-feb-2014						
Name :	M. Glegola						
Checked :	J. Hollaar						

Referentienr :	13039140509	**Berekening :**	B.14008
Project	: 150 kV lijn Leiden - Zoetermeer		
Part	: mast 52		

D&C ENGINEERING

Check equal leg angle-members according to Eurocode 3, prEN 1993-1-1 : 2003

File prEN 1993-1-1.revB.xls d.d. 2-32012, JG

Check section: *HV 2* *diagonalen*

Memberforces : **(Attention! pressure = "-" and tension ="+")**

Compression:	N_{Sd}	=	-2,7	kN	***Combined forces diagonal:***			
Tension:	N_{Sd}	=	1,8	kN	$N_{comb1;c;s;d}$ (min. Compr. or tension)	=	0	kN
	$F_{perpend.;s;d}$	=	1,5	kN	$N_{comb2;c;s;d}$ (max. compression)	=	0	kN

Angle profile : *H100/100/8* (*1)

h	=	100	mm	I_y	=	1448424	mm^4
b	=	100	mm	$W_{y;el;eff.1}$	=	19942	mm^3
t_f	=	8	mm	$W_{y;el;eff.2}$	=	52924	mm^3
y_s	=	27,4	mm	i_y	=	30,6	mm
A_{bruto}	=	1551	mm^2	i_v	=	19,4	mm

Material :

Mat. qual. Fe360 / Fe510	=	Fe360		Permissible stress $f_{y;d}$	=	235,0	N/mm^2

Geometry section and bolts:

$L_{y;cr}$	=	3535	mm	No. bolts / end / flange	=	1	
$L_{v;cr}$	=	3535	mm	Type of bolts M / "	=	20	
$L_{tot\ (with\ comb.\ buckling)}$	=	0	mm	End distance bolt e1	=	30	mm
$a*L_{tot\ (with\ comb.\ buckling)}$	=	0	mm	Centre-centre spacing bolt s1	=	70	mm
$L_{perpendicular\ force}$	=	3535	mm	Edge distance bolt e2	=	35	mm
Position perpendicular force	=	1	(⌉=1, ⌋=2)	Boltquality 4.6/5.6/8.8/10.9	=	4,6	
Column profile?	=	1	no=1, yes=2	Rolled screw threads	=	1	
Thickness tie plate	=	8	mm	Dubble strap joint no=1, yes=2	=	1	

Summary checks :

1 - Check tension on member :

$UC_1 = N_{Ed} / N_{t.Rd}$ = **0,02** **< 1**

2 - Check perpendicular force on member :

$UC_2 = M_{Ed} / M_{c.Rd}$ = **0,28** **< 1**

3 - Check of the member slenderness :

$UC_3 = C_{max;buc} / C_{perm}$ = **183** **< 200 or 240**

4 - Check stress in member due to compression without excentricity:

$UC_4 = N_{E;d} / (C_{max;buc} \times N_{b;Rd})$ = **n.v.t.** **< 1**

5 - Check stress in member due to compression with excentricity:

$UC_{5-1} = N_{E;d} / (C_{max;buc} \times N_{b;Rd})$ = **0,03** **< 1**

$UC_{5-2} = N_{E;d} / N_{b;Rd} + k_{yy} \times (M_{y;Ed} + DM_{y;Ed}) / (C_{LT} \times M_{y;Rk})$ = **0,05** **< 1**

6 - Check stress with combined buckling of two sections:

$UC_{5-1} = N_{E;d} / (C_{max;buc} \times N_{b;Rd})$ = **n.v.t.** **< 1**

$UC_{5-2} = N_{E;d} / N_{b;Rd} + k_{yy} \times (M_{y;Ed} + DM_{y;Ed}) / (C_{LT} \times M_{y;Rk})$ = **n.v.t.** **< 1**

7 - Check shear stress boltconnection:

$UC_7 = F_{v;Ed} / F_{v;Rd}$ = **0,06** **< 1**

8 - Check bearing stress boltconnection:

$UC_8 = F_{b;Ed} / F_{b;Rd}$ = **0,04** **< 1**

Remarks:

The maximum increase of stress or totalstress is(*2) : **$U.C_{max}$ = 0,28 = 28%**

(*1) Eventually, with the checks of the stresses, the cross-section reduction method is used according to prEN 1993-1-5.

(*2) The total stress or increase of stress has been related to the permissible stress.

Revision :	0	A	B	C	D	E	F
Date :	5-feb-2014						
Name :	M. Glegola						
Checked :	J. Hollaar						

Referentienr :	13039140509	**Berekening :**	B.14008
Project	: 150 kV lijn Leiden - Zoetermeer		
Part	: mast 52		

D&C ENGINEERING

Check equal leg angle-members according to Eurocode 3, prEN 1993-1-1 : 2003

File prEN 1993-1-1.revB.xls d.d. 2-32012, JG

Check section: *HV 2* *kruis*

Memberforces : **(Attention! pressure = "-" and tension ="+")**

Compression:	N_{Sd}	=	*-0,8*	kN	***Combined forces diagonal:***			
Tension:	N_{Sd}	=	*0,6*	kN	$N_{comb1;c;s;d}$ (min. Compr. or tension)	=	*0*	kN
	$F_{perpend.;s;d}$	=	*1,5*	kN	$N_{comb2;c;s;d}$ (max. compression)	=	*0*	kN

Angle profile : *H60/60/5* (*1)

h	=	*60*	mm	I_y	=	*193708*	mm^4
b	=	*60*	mm	$W_{y;el;eff.1}$	=	*4447*	mm^3
t_f	=	*5*	mm	$W_{y;el;eff.2}$	=	*11785*	mm^3
y_s	=	*16,4*	mm	i_y	=	*18,2*	mm
A_{bruto}	=	*582*	mm^2	i_v	=	*11,6*	mm

Material :

Mat. qual. Fe360 / Fe510	=	*Fe360*		Permissible stress $f_{y;d}$	=	*235,0*	N/mm^2

Geometry section and bolts:

$L_{y;cr}$	=	*5000*	mm	No. bolts / end / flange	=	*1*	
$L_{v;cr}$	=	*5000*	mm	Type of bolts M / "	=	*20*	
$L_{tot\ (with\ comb.\ buckling)}$	=	*0*	mm	End distance bolt	=	*30*	mm
$a*L_{tot\ (with\ comb.\ buckling)}$	=	*0*	mm	Centre-centre spacing bolt s1	=	*70*	mm
$L_{perpendicular\ force}$	=	*5000*	mm	Edge distance bolt e2	=	*35*	mm
Position perpendicular force	=	*1*	(⌉=1, ⌋=2)	Boltquality 4.6/5.6/8.8/10.9	=	*4,6*	
Column profile?	=	*1*	no=1, yes=2	Rolled screw threads	=	*1*	
Thickness tie plate	=	*12*	mm	Dubble strap joint no=1, yes=2	=	*1*	

Summary checks :

1 - Check tension on member :

$UC_1 = N_{Ed} / N_{t.Rd}$ = **0,01** **< 1**

2 - Check perpendicular force on member :

$UC_2 = M_{Ed} / M_{c.Rd}$ = **1,79** **> 1 !!**

3 - Check of the member slenderness :

$UC_3 = C_{max;buc} / C_{perm}$ = **432** **< 200 or 240**

4 - Check stress in member due to compression without excentricity:

$UC_4 = N_{E;d} / (C_{max;buc} \times N_{b;Rd})$ = **n.v.t.** **< 1**

5 - Check stress in member due to compression with excentricity:

$UC_{5-1} = N_{E;d} / (C_{max;buc} \times N_{b;Rd})$ = **0,13** **< 1**

$UC_{5-2} = N_{E;d} / N_{b;Rd} + k_{yy} \times (M_{y;Ed} + DM_{y;Ed}) / (C_{LT} \times M_{y;Rk})$ = **0,15** **< 1**

6 - Check stress with combined buckling of two sections:

$UC_{5-1} = N_{E;d} / (C_{max;buc} \times N_{b;Rd})$ = **n.v.t.** **< 1**

$UC_{5-2} = N_{E;d} / N_{b;Rd} + k_{yy} \times (M_{y;Ed} + DM_{y;Ed}) / (C_{LT} \times M_{y;Rk})$ = **n.v.t.** **< 1**

7 - Check shear stress boltconnection:

$UC_7 = F_{v;Ed} / F_{v;Rd}$ = **0,02** **< 1**

8 - Check bearing stress boltconnection:

$UC_8 = F_{b;Ed} / F_{b;Rd}$ = **0,02** **< 1**

Remarks:

The maximum increase of stress or totalstress is(*2) : **$U.C_{max}$ = 1,79 = 179%**

(*1) Eventually, with the checks of the stresses, the cross-section reduction method is used according to prEN 1993-1-5.

(*2) The total stress or increase of stress has been related to the permissible stress.

Revision :	0	A	B	C	D	E	F
Date :	5-feb-2014						
Name :	M. Glegola						
Checked :	J. Hollaar						

Referentienr :	13039140509	**Berekening :**	B.14008
Project	: 150 kV lijn Leiden - Zoetermeer		
Part	: mast 52		

D&C ENGINEERING

Check equal leg angle-members according to Eurocode 3, prEN 1993-1-1 : 2003

File prEN 1993-1-1.revB.xls d.d. 2-32012, JG

Check section: *HV 2* *kruis*

Memberforces : **(Attention! pressure = "-" and tension ="+")**

Compression:	N_{Sd}	=	*-0,8*	kN	***Combined forces diagonal:***			
Tension:	N_{Sd}	=	*0,6*	kN	$N_{comb1;c;s;d}$ (min. Compr. or tension)	=	*0*	kN
	$F_{perpend.;s;d}$	=	*1,5*	kN	$N_{comb2;c;s;d}$ (max. compression)	=	*0*	kN

Angle profile : *H60/60/10* (*1)

h	=	*60*	mm	I_y	=	*349321*	mm^4
b	=	*60*	mm	$W_{y;el;eff.1}$	=	*8408*	mm^3
t_f	=	*10*	mm	$W_{y;el;eff.2}$	=	*18928*	mm^3
y_s	=	*18,5*	mm	i_y	=	*17,8*	mm
A_{bruto}	=	*1107*	mm^2	i_v	=	*11,5*	mm

Material :

Mat. qual. Fe360 / Fe510	=	*Fe360*		Permissible stress $f_{y;d}$	=	*235,0*	N/mm^2

Geometry section and bolts:

$L_{y;cr}$	=	*5000*	mm	No. bolts / end / flange	=	*1*	
$L_{v;cr}$	=	*5000*	mm	Type of bolts M / "	=	*20*	
$L_{tot\ (with\ comb.\ buckling)}$	=	*0*	mm	End distance bolt	=	*30*	mm
$a*L_{tot\ (with\ comb.\ buckling)}$	=	*0*	mm	Centre-centre spacing bolt s1	=	*70*	mm
$L_{perpendicular\ force}$	=	*5000*	mm	Edge distance bolt e2	=	*35*	mm
Position perpendicular force	=	*1*	(⌉=1, ⌋=2)	Boltquality 4.6/5.6/8.8/10.9	=	*4,6*	
Column profile?	=	*1*	no=1, yes=2	Rolled screw threads	=	*1*	
Thickness tie plate	=	*12*	mm	Dubble strap joint no=1, yes=2	=	*1*	

Summary checks :

1 - Check tension on member :

$UC_1 = N_{Ed} / N_{t.Rd}$ = **0,00** **< 1**

2 - Check perpendicular force on member :

$UC_2 = M_{Ed} / M_{c.Rd}$ = **0,95** **< 1**

3 - Check of the member slenderness :

$UC_3 = C_{max;buc} / C_{perm}$ = **434** **< 200 or 240**

4 - Check stress in member due to compression without excentricity:

$UC_4 = N_{E;d} / (C_{max;buc} \times N_{b;Rd})$ = **n.v.t.** **< 1**

5 - Check stress in member due to compression with excentricity:

$UC_{5-1} = N_{E;d} / (C_{max;buc} \times N_{b;Rd})$ = **0,07** **< 1**

$UC_{5-2} = N_{E;d} / N_{b;Rd} + k_{yy} \times (M_{y;Ed} + DM_{y;Ed}) / (C_{LT} \times M_{y;Rk})$ = **0,08** **< 1**

6 - Check stress with combined buckling of two sections:

$UC_{5-1} = N_{E;d} / (C_{max;buc} \times N_{b;Rd})$ = **n.v.t.** **< 1**

$UC_{5-2} = N_{E;d} / N_{b;Rd} + k_{yy} \times (M_{y;Ed} + DM_{y;Ed}) / (C_{LT} \times M_{y;Rk})$ = **n.v.t.** **< 1**

7 - Check shear stress boltconnection:

$UC_7 = F_{v;Ed} / F_{v;Rd}$ = **0,02** **< 1**

8 - Check bearing stress boltconnection:

$UC_8 = F_{b;Ed} / F_{b;Rd}$ = **0,01** **< 1**

Remarks:

The maximum increase of stress or totalstress is(*2) : **$U.C_{max}$ = 0,95 = 95%**

(*1) Eventually, with the checks of the stresses, the cross-section reduction method is used according to prEN 1993-1-5.

(*2) The total stress or increase of stress has been related to the permissible stress.

Revision :	0	A	B	C	D	E	F
Date :	5-feb-2014						
Name :	M. Glegola						
Checked :	J. Hollaar						

Referentienr :	13039140509	**Berekening :**	B.14008
Project	: 150 kV lijn Leiden - Zoetermeer		
Part	: mast 52		

D&C ENGINEERING

Check equal leg angle-members according to Eurocode 3, prEN 1993-1-1 : 2003

File prEN 1993-1-1.revB.xls d.d. 2-32012, JG

Check section: *Traverse 1 en 2 bovenrand*

Memberforces : **(Attention! pressure = "-" and tension ="+")**

Compression:	N_{Sd}	=	*0,0*	kN	***Combined forces diagonal:***			
Tension:	N_{Sd}	=	*86,6*	kN	$N_{comb1;c;s;d}$ (min. Compr. or tension)	=	*0*	kN
	$F_{perpend.;s;d}$	=	*0*	kN	$N_{comb2;c;s;d}$ (max. compression)	=	*0*	kN

Angle profile : *H65/50/5* (*1)

h	=	*65*	mm	I_y	=	*230454*	mm^4
b	=	*50*	mm	$W_{y;el;eff.1}$	=	*4389*	mm^3
t_f	=	*5*	mm	$W_{y;el;eff.2}$	=	*18449*	mm^3
y_s	=	*12,5*	mm	i_y	=	*20,4*	mm
A_{bruto}	=	*554*	mm^2	i_v	=	*10,5*	mm

Material :

Mat. qual. Fe360 / Fe510	=	*Fe360*		Permissible stress $f_{y;d}$	=	*235,0*	N/mm^2

Geometry section and bolts:

$L_{y;cr}$	=	*4911*	mm	No. bolts / end / flange	=	*4*	
$L_{v;cr}$	=	*4911*	mm	Type of bolts M / "	=	*20*	
$L_{tot\ (with\ comb.\ buckling)}$	=	*0*	mm	End distance bolt e1	=	*35*	mm
$a*L_{tot\ (with\ comb.\ buckling)}$	=	*0*	mm	Centre-centre spacing bolt s1	=	*60*	mm
$L_{perpendicular\ force}$	=	*0*	mm	Edge distance bolt e2	=	*25*	mm
Position perpendicular force	=	*1*	(⌉=1, ⌋=2)	Boltquality 4.6/5.6/8.8/10.9	=	*4,6*	
Column profile?	=	*1*	no=1, yes=2	Rolled screw threads	=	*1*	
Thickness tie plate	=	*8*	mm	Dubble strap joint no=1, yes=2	=	*1*	

Summary checks :

1 - Check tension on member :

$UC_1 = N_{Ed} / N_{t.Rd}$ = **1,31** **> 1 !!**

2 - Check perpendicular force on member :

$UC_2 = M_{Ed} / M_{c.Rd}$ = **n.v.t.** **< 1**

3 - Check of the member slenderness :

$UC_3 = C_{max;buc} / C_{perm}$ = **466** **< 200 or 240**

4 - Check stress in member due to compression without excentricity:

$UC_4 = N_{E;d} / (C_{max;buc} \times N_{b;Rd})$ = **0,00** **< 1**

5 - Check stress in member due to compression with excentricity:

$UC_{5-1} = N_{E;d} / (C_{max;buc} \times N_{b;Rd})$ = **n.v.t.** **< 1**

$UC_{5-2} = N_{E;d} / N_{b;Rd} + k_{yy} \times (M_{y;Ed} + DM_{y;Ed}) / (C_{LT} \times M_{y;Rk})$ = **n.v.t.** **< 1**

6 - Check stress with combined buckling of two sections:

$UC_{5-1} = N_{E;d} / (C_{max;buc} \times N_{b;Rd})$ = **n.v.t.** **< 1**

$UC_{5-2} = N_{E;d} / N_{b;Rd} + k_{yy} \times (M_{y;Ed} + DM_{y;Ed}) / (C_{LT} \times M_{y;Rk})$ = **n.v.t.** **< 1**

7 - Check shear stress boltconnection:

$UC_7 = F_{v;Ed} / F_{v;Rd}$ = **0,46** **< 1**

8 - Check bearing stress boltconnection:

$UC_8 = F_{b;Ed} / F_{b;Rd}$ = **0,96** **< 1**

Remarks:

The maximum increase of stress or totalstress is(*2) : **$U.C_{max}$ = 1,31 = 131%**

(*1) Eventually, with the checks of the stresses, the cross-section reduction method is used according to prEN 1993-1-5.

(*2) The total stress or increase of stress has been related to the permissible stress.

Revision :	0	A	B	C	D	E	F
Date :	5-feb-2014						
Name :	M. Glegola						
Checked :	J. Hollaar						

Referentienr :	13039140509	**Berekening :**	B.14008
Project	: 150 kV lijn Leiden - Zoetermeer		
Part	: mast 52		

D&C ENGINEERING

Check equal leg angle-members according to Eurocode 3, prEN 1993-1-1 : 2003

File prEN 1993-1-1.revB.xls d.d. 2-32012, JG

Check section: *Traverse 1 en 2 bovenrand* **verzwaard**

Memberforces : **(Attention! pressure = "-" and tension ="+")**

Compression:	N_{Sd}	=	0,0	kN	***Combined forces diagonal:***			
Tension:	N_{Sd}	=	86,6	kN	$N_{comb1;c;s;d}$ (min. Compr. or tension)	=	0	kN
	$F_{perpend.;s;d}$	=	0	kN	$N_{comb2;c;s;d}$ (max. compression)	=	0	kN

Angle profile : H60/60/8 (*1)

h	=	60	mm	I_y	=	291532	mm^4
b	=	60	mm	$W_{y;el;eff.1}$	=	6890	mm^3
t_f	=	8	mm	$W_{y;el;eff.2}$	=	16481	mm^3
y_s	=	17,7	mm	i_y	=	18,0	mm
A_{bruto}	=	903	mm^2	i_v	=	11,5	mm

Material :

Mat. qual. Fe360 / Fe510	=	Fe360		Permissible stress $f_{y;d}$	=	235,0	N/mm^2

Geometry section and bolts:

$L_{y;cr}$	=	4911	mm	No. bolts / end / flange	=	4	
$L_{v;cr}$	=	4911	mm	Type of bolts M / "	=	20	
$L_{tot\ (with\ comb.\ buckling)}$	=	0	mm	End distance bolt e1	=	35	mm
$a*L_{tot\ (with\ comb.\ buckling)}$	=	0	mm	Centre-centre spacing bolt s1	=	60	mm
$L_{perpendicular\ force}$	=	0	mm	Edge distance bolt e2	=	25	mm
Position perpendicular force	=	1	(⌉=1, ⌋=2)	Boltquality 4.6/5.6/8.8/10.9	=	8,8	
Column profile?	=	1	no=1, yes=2	Rolled screw threads	=	1	
Thickness tie plate	=	8	mm	Dubble strap joint no=1, yes=2	=	1	

Summary checks :

1 - Check tension on member :

$UC_1 = N_{Ed} / N_{t.Rd}$ = **0,80** **< 1**

2 - Check perpendicular force on member :

$UC_2 = M_{Ed} / M_{c.Rd}$ = **n.v.t.** **< 1**

3 - Check of the member slenderness :

$UC_3 = C_{max;buc} / C_{perm}$ = **426** **< 200 or 240**

4 - Check stress in member due to compression without excentricity:

$UC_4 = N_{E;d} / (C_{max;buc} \times N_{b;Rd})$ = **0,00** **< 1**

5 - Check stress in member due to compression with excentricity:

$UC_{5-1} = N_{E;d} / (C_{max;buc} \times N_{b;Rd})$ = **n.v.t.** **< 1**

$UC_{5-2} = N_{E;d} / N_{b;Rd} + k_{yy} \times (M_{y;Ed} + DM_{y;Ed}) / (C_{LT} \times M_{y;Rk})$ = **n.v.t.** **< 1**

6 - Check stress with combined buckling of two sections:

$UC_{5-1} = N_{E;d} / (C_{max;buc} \times N_{b;Rd})$ = **n.v.t.** **< 1**

$UC_{5-2} = N_{E;d} / N_{b;Rd} + k_{yy} \times (M_{y;Ed} + DM_{y;Ed}) / (C_{LT} \times M_{y;Rk})$ = **n.v.t.** **< 1**

7 - Check shear stress boltconnection:

$UC_7 = F_{v;Ed} / F_{v;Rd}$ = **0,23** **< 1**

8 - Check bearing stress boltconnection:

$UC_8 = F_{b;Ed} / F_{b;Rd}$ = **0,60** **< 1**

Remarks:

The maximum increase of stress or totalstress is(*2) : **$U.C_{max}$ = 0,80 = 80%**

(*1) Eventually, with the checks of the stresses, the cross-section reduction method is used according to prEN 1993-1-5.

(*2) The total stress or increase of stress has been related to the permissible stress.

Revision :	0	A	B	C	D	E	F
Date :	5-feb-2014						
Name :	M. Glegola						
Checked :	J. Hollaar						

Referentienr :	13039140509	**Berekening :**	B.14008
Project	: 150 kV lijn Leiden - Zoetermeer		
Part	: mast 52		

D&C ENGINEERING

Check equal leg angle-members according to Eurocode 3, prEN 1993-1-1 : 2003

File prEN 1993-1-1.revB.xls d.d. 2-32012, JG

Check section: *Traverse 1 en 2 diagonalen v.v en a.v*

Memberforces : **(Attention! pressure = "-" and tension ="+")**

Compression:	N_{Sd}	=	*0,0*	kN	***Combined forces diagonal:***			
Tension:	N_{Sd}	=	*41,7*	kN	$N_{comb1;c;s;d}$ (min. Compr. or tension)	=	*0*	kN
	$F_{perpend.;s;d}$	=	*0*	kN	$N_{comb2;c;s;d}$ (max. compression)	=	*0*	kN

Angle profile : *H50/40/5* (*1)

h	=	*50*	mm	I_y	=	*103800*	mm^4
b	=	*40*	mm	$W_{y;el;eff.1}$	=	*2638*	mm^3
t_f	=	*5*	mm	$W_{y;el;eff.2}$	=	*9746*	mm^3
y_s	=	*10,7*	mm	i_y	=	*15,6*	mm
A_{bruto}	=	*427*	mm^2	i_v	=	*8,4*	mm

Material :

Mat. qual. Fe360 / Fe510	=	*Fe360*		Permissible stress $f_{y;d}$	=	*235,0*	N/mm^2

Geometry section and bolts:

$L_{y;cr}$	=	*2810*	mm	No. bolts / end / flange	=	*3*	
$L_{v;cr}$	=	*2810*	mm	Type of bolts M / "	=	*16*	
$L_{tot\ (with\ comb.\ buckling)}$	=	*0*	mm	End distance bolt e1	=	*25*	mm
$a*L_{tot\ (with\ comb.\ buckling)}$	=	*0*	mm	Centre-centre spacing bolt s1	=	*50*	mm
$L_{perpendicular\ force}$	=	*0*	mm	Edge distance bolt e2	=	*22*	mm
Position perpendicular force	=	*1*	(⌉=1, ⌋=2)	Boltquality 4.6/5.6/8.8/10.9	=	*4,6*	
Column profile?	=	*1*	no=1, yes=2	Rolled screw threads	=	*1*	
Thickness tie plate	=	*8*	mm	Dubble strap joint no=1, yes=2	=	*1*	

Summary checks :

1 - Check tension on member :

$UC_1 = N_{Ed} / N_{t.Rd}$ = **0,82** **< 1**

2 - Check perpendicular force on member :

$UC_2 = M_{Ed} / M_{c.Rd}$ = **n.v.t.** **< 1**

3 - Check of the member slenderness :

$UC_3 = C_{max;buc} / C_{perm}$ = **334** **< 200 or 240**

4 - Check stress in member due to compression without excentricity:

$UC_4 = N_{E;d} / (C_{max;buc} \times N_{b;Rd})$ = **0,00** **< 1**

5 - Check stress in member due to compression with excentricity:

$UC_{5-1} = N_{E;d} / (C_{max;buc} \times N_{b;Rd})$ = **n.v.t.** **< 1**

$UC_{5-2} = N_{E;d} / N_{b;Rd} + k_{yy} \times (M_{y;Ed} + DM_{y;Ed}) / (C_{LT} \times M_{y;Rk})$ = **n.v.t.** **< 1**

6 - Check stress with combined buckling of two sections:

$UC_{5-1} = N_{E;d} / (C_{max;buc} \times N_{b;Rd})$ = **n.v.t.** **< 1**

$UC_{5-2} = N_{E;d} / N_{b;Rd} + k_{yy} \times (M_{y;Ed} + DM_{y;Ed}) / (C_{LT} \times M_{y;Rk})$ = **n.v.t.** **< 1**

7 - Check shear stress boltconnection:

$UC_7 = F_{v;Ed} / F_{v;Rd}$ = **0,46** **< 1**

8 - Check bearing stress boltconnection:

$UC_8 = F_{b;Ed} / F_{b;Rd}$ = **0,76** **< 1**

Remarks:

The maximum increase of stress or totalstress is(*2) : **$U.C_{max}$ = 0,82 = 82%**

(*1) Eventually, with the checks of the stresses, the cross-section reduction method is used according to prEN 1993-1-5.

(*2) The total stress or increase of stress has been related to the permissible stress.

Revision :	0	A	B	C	D	E	F
Date :	5-feb-2014						
Name :	M. Glegola						
Checked :	J. Hollaar						

Referentienr :	13039140509	**Berekening :**	B.14008
Project	: 150 kV lijn Leiden - Zoetermeer		
Part	: mast 52		

D&C ENGINEERING

Check equal leg angle-members according to Eurocode 3, prEN 1993-1-1 : 2003

File prEN 1993-1-1.revB.xls d.d. 2-32012, JG

Check section: *Traverse 1 en 2 diagonalen ondervlak*

Memberforces : **(Attention! pressure = "-" and tension ="+")**

Compression:	N_{Sd}	=	*-18,0*	kN	***Combined forces diagonal:***			
Tension:	N_{Sd}	=	*15,7*	kN	$N_{comb1;c;s;d}$ (min. Compr. or tension)	=	*0*	kN
	$F_{perpend.;s;d}$	=	*0*	kN	$N_{comb2;c;s;d}$ (max. compression)	=	*0*	kN

Angle profile : *H75/75/6* (*1)

h	=	*75*	mm	I_y	=	*455710*	mm^4
b	=	*75*	mm	$W_{y;el;eff.1}$	=	*8351*	mm^3
t_f	=	*6*	mm	$W_{y;el;eff.2}$	=	*22305*	mm^3
y_s	=	*20,4*	mm	i_y	=	*22,8*	mm
A_{bruto}	=	*875*	mm^2	i_v	=	*14,5*	mm

Material :

Mat. qual. Fe360 / Fe510	=	*Fe360*		Permissible stress $f_{y;d}$	=	*235,0*	N/mm^2

Geometry section and bolts:

$L_{y;cr}$	=	*2269*	mm	No. bolts / end / flange	=	*1*	
$L_{v;cr}$	=	*2269*	mm	Type of bolts M / "	=	*16*	
$L_{tot\ (with\ comb.\ buckling)}$	=	*0*	mm	End distance bolt e1	=	*25*	mm
$a*L_{tot\ (with\ comb.\ buckling)}$	=	*0*	mm	Centre-centre spacing bolt s1	=	*50*	mm
$L_{perpendicular\ force}$	=	*0*	mm	Edge distance bolt e2	=	*22*	mm
Position perpendicular force	=	*1*	(⌉=1, ⌋=2)	Boltquality 4.6/5.6/8.8/10.9	=	*4,6*	
Column profile?	=	*1*	no=1, yes=2	Rolled screw threads	=	*1*	
Thickness tie plate	=	*8*	mm	Dubble strap joint no=1, yes=2	=	*1*	

Summary checks :

1 - Check tension on member :

$UC_1 = N_{Ed} / N_{t.Rd}$ = **0,35** **< 1**

2 - Check perpendicular force on member :

$UC_2 = M_{Ed} / M_{c.Rd}$ = **n.v.t.** **< 1**

3 - Check of the member slenderness :

$UC_3 = C_{max;buc} / C_{perm}$ = **157** **< 200 or 240**

4 - Check stress in member due to compression without excentricity:

$UC_4 = N_{E;d} / (C_{max;buc} \times N_{b;Rd})$ = **n.v.t.** **< 1**

5 - Check stress in member due to compression with excentricity:

$UC_{5-1} = N_{E;d} / (C_{max;buc} \times N_{b;Rd})$ = **0,31** **< 1**

$UC_{5-2} = N_{E;d} / N_{b;Rd} + k_{yy} \times (M_{y;Ed} + DM_{y;Ed}) / (C_{LT} \times M_{y;Rk})$ = **0,44** **< 1**

6 - Check stress with combined buckling of two sections:

$UC_{5-1} = N_{E;d} / (C_{max;buc} \times N_{b;Rd})$ = **n.v.t.** **< 1**

$UC_{5-2} = N_{E;d} / N_{b;Rd} + k_{yy} \times (M_{y;Ed} + DM_{y;Ed}) / (C_{LT} \times M_{y;Rk})$ = **n.v.t.** **< 1**

7 - Check shear stress boltconnection:

$UC_7 = F_{v;Ed} / F_{v;Rd}$ = **0,60** **< 1**

8 - Check bearing stress boltconnection:

$UC_8 = F_{b;Ed} / F_{b;Rd}$ = **0,71** **< 1**

Remarks:

The maximum increase of stress or totalstress is(*2) : **$U.C_{max}$ = 0,71 = 71%**

(*1) Eventually, with the checks of the stresses, the cross-section reduction method is used according to prEN 1993-1-5.

(*2) The total stress or increase of stress has been related to the permissible stress.

Revision :	0	A	B	C	D	E	F
Date :	5-feb-2014						
Name :	M. Glegola						
Checked :	J. Hollaar						

Referentienr :	13039140509	**Berekening :**	B.14008
Project	: 150 kV lijn Leiden - Zoetermeer		
Part	: mast 52		

D&C ENGINEERING

Check equal leg angle-members according to Eurocode 3, prEN 1993-1-1 : 2003

File prEN 1993-1-1.revB.xls d.d. 2-32012, JG

Check section: *Traverse 1 en 2 diagonalen ondervlak*

Memberforces : **(Attention! pressure = "-" and tension ="+")**

Compression:	N_{Sd}	=	-16,8	kN	***Combined forces diagonal:***			
Tension:	N_{Sd}	=	15,7	kN	$N_{comb1;c;s;d}$ (min. Compr. or tension)	=	0	kN
	$F_{perpend.;s;d}$	=	0	kN	$N_{comb2;c;s;d}$ (max. compression)	=	0	kN

Angle profile : H55/55/5 (*1)

h	=	55	mm	I_y	=	147150	mm^4
b	=	55	mm	$W_{y;el;eff.1}$	=	3697	mm^3
t_f	=	5	mm	$W_{y;el;eff.2}$	=	9685	mm^3
y_s	=	15,2	mm	i_y	=	16,6	mm
A_{bruto}	=	532	mm^2	i_v	=	10,5	mm

Material :

Mat. qual. Fe360 / Fe510	=	Fe360		Permissible stress $f_{y;d}$	=	235,0	N/mm^2

Geometry section and bolts:

$L_{y;cr}$	=	1300	mm	No. bolts / end / flange	=	1	
$L_{v;cr}$	=	1300	mm	Type of bolts M / "	=	16	
$L_{tot\ (with\ comb.\ buckling)}$	=	0	mm	End distance bolt e1	=	25	mm
$a*L_{tot\ (with\ comb.\ buckling)}$	=	0	mm	Centre-centre spacing bolt s1	=	50	mm
$L_{perpendicular\ force}$	=	0	mm	Edge distance bolt e2	=	22	mm
Position perpendicular force	=	1	(⌉=1, ⌋=2)	Boltquality 4.6/5.6/8.8/10.9	=	4,6	
Column profile?	=	1	no=1, yes=2	Rolled screw threads	=	1	
Thickness tie plate	=	8	mm	Dubble strap joint no=1, yes=2	=	1	

Summary checks :

1 - Check tension on member :

$UC_1 = N_{Ed} / N_{t.Rd}$ = **0,42** **< 1**

2 - Check perpendicular force on member :

$UC_2 = M_{Ed} / M_{c.Rd}$ = **n.v.t.** **< 1**

3 - Check of the member slenderness :

$UC_3 = C_{max;buc} / C_{perm}$ = **123** **< 200 or 240**

4 - Check stress in member due to compression without excentricity:

$UC_4 = N_{E;d} / (C_{max;buc} \times N_{b;Rd})$ = **n.v.t.** **< 1**

5 - Check stress in member due to compression with excentricity:

$UC_{5-1} = N_{E;d} / (C_{max;buc} \times N_{b;Rd})$ = **0,32** **< 1**

$UC_{5-2} = N_{E;d} / N_{b;Rd} + k_{yy} \times (M_{y;Ed} + DM_{y;Ed}) / (C_{LT} \times M_{y;Rk})$ = **0,52** **< 1**

6 - Check stress with combined buckling of two sections:

$UC_{5-1} = N_{E;d} / (C_{max;buc} \times N_{b;Rd})$ = **n.v.t.** **< 1**

$UC_{5-2} = N_{E;d} / N_{b;Rd} + k_{yy} \times (M_{y;Ed} + DM_{y;Ed}) / (C_{LT} \times M_{y;Rk})$ = **n.v.t.** **< 1**

7 - Check shear stress boltconnection:

$UC_7 = F_{v;Ed} / F_{v;Rd}$ = **0,56** **< 1**

8 - Check bearing stress boltconnection:

$UC_8 = F_{b;Ed} / F_{b;Rd}$ = **0,86** **< 1**

Remarks:

The maximum increase of stress or totalstress is(*2) : **$U.C_{max}$ = 0,86 = 86%**

(*1) Eventually, with the checks of the stresses, the cross-section reduction method is used according to prEN 1993-1-5.

(*2) The total stress or increase of stress has been related to the permissible stress.

Revision :	0	A	B	C	D	E	F
Date :	5-feb-2014						
Name :	M. Glegola						
Checked :	J. Hollaar						

Referentienr :	13039140509	**Berekening :**	B.14008
Project	: 150 kV lijn Leiden - Zoetermeer		
Part	: mast 52		

D&C ENGINEERING

Check equal leg angle-members according to Eurocode 3, prEN 1993-1-1 : 2003

File prEN 1993-1-1.revB.xls d.d. 2-32012, JG

Check section: *Traverse 3 en 4 bovenrand*

Memberforces : **(Attention! pressure = "-" and tension ="+")**

Compression:	N_{Sd}	=	*0,0*	kN	***Combined forces diagonal:***			
Tension:	N_{Sd}	=	*56,8*	kN	$N_{comb1;c;s;d}$ (min. Compr. or tension)	=	*0*	kN
	$F_{perpend.;s;d}$	=	*0*	kN	$N_{comb2;c;s;d}$ (max. compression)	=	*0*	kN

Angle profile : *H50/40/5* (*1)

h	=	*50*	mm	I_y	=	*103800*	mm^4
b	=	*40*	mm	$W_{y;el;eff.1}$	=	*2638*	mm^3
t_f	=	*5*	mm	$W_{y;el;eff.2}$	=	*9746*	mm^3
y_s	=	*10,7*	mm	i_y	=	*15,6*	mm
A_{bruto}	=	*427*	mm^2	i_v	=	*8,4*	mm

Material :

Mat. qual. Fe360 / Fe510	=	*Fe360*		Permissible stress $f_{y;d}$	=	*235,0*	N/mm^2

Geometry section and bolts:

$L_{y;cr}$	=	*2880*	mm	No. bolts / end / flange	=	*4*	
$L_{v;cr}$	=	*2880*	mm	Type of bolts M / "	=	*16*	
$L_{tot\ (with\ comb.\ buckling)}$	=	*0*	mm	End distance bolt e1	=	*25*	mm
$a*L_{tot\ (with\ comb.\ buckling)}$	=	*0*	mm	Centre-centre spacing bolt s1	=	*50*	mm
$L_{perpendicular\ force}$	=	*0*	mm	Edge distance bolt e2	=	*22*	mm
Position perpendicular force	=	*1*	(⌉=1, ⌋=2)	Boltquality 4.6/5.6/8.8/10.9	=	*4,6*	
Column profile?	=	*1*	no=1, yes=2	Rolled screw threads	=	*1*	
Thickness tie plate	=	*8*	mm	Dubble strap joint no=1, yes=2	=	*1*	

Summary checks :

1 - Check tension on member :

$UC_1 = N_{Ed} / N_{t.Rd}$ = **1,12** **> 1 !!**

2 - Check perpendicular force on member :

$UC_2 = M_{Ed} / M_{c.Rd}$ = **n.v.t.** **< 1**

3 - Check of the member slenderness :

$UC_3 = C_{max;buc} / C_{perm}$ = **343** **< 200 or 240**

4 - Check stress in member due to compression without excentricity:

$UC_4 = N_{E;d} / (C_{max;buc} \times N_{b;Rd})$ = **0,00** **< 1**

5 - Check stress in member due to compression with excentricity:

$UC_{5-1} = N_{E;d} / (C_{max;buc} \times N_{b;Rd})$ = **n.v.t.** **< 1**

$UC_{5-2} = N_{E;d} / N_{b;Rd} + k_{yy} \times (M_{y;Ed} + DM_{y;Ed}) / (C_{LT} \times M_{y;Rk})$ = **n.v.t.** **< 1**

6 - Check stress with combined buckling of two sections:

$UC_{5-1} = N_{E;d} / (C_{max;buc} \times N_{b;Rd})$ = **n.v.t.** **< 1**

$UC_{5-2} = N_{E;d} / N_{b;Rd} + k_{yy} \times (M_{y;Ed} + DM_{y;Ed}) / (C_{LT} \times M_{y;Rk})$ = **n.v.t.** **< 1**

7 - Check shear stress boltconnection:

$UC_7 = F_{v;Ed} / F_{v;Rd}$ = **0,47** **< 1**

8 - Check bearing stress boltconnection:

$UC_8 = F_{b;Ed} / F_{b;Rd}$ = **0,77** **< 1**

Remarks:

The maximum increase of stress or totalstress is(*2) : **$U.C_{max}$ = 1,12 = 112%**

(*1) Eventually, with the checks of the stresses, the cross-section reduction method is used according to prEN 1993-1-5.

(*2) The total stress or increase of stress has been related to the permissible stress.

Revision :	0	A	B	C	D	E	F
Date :	5-feb-2014						
Name :	M. Glegola						
Checked :	J. Hollaar						

Referentienr :	13039140509	**Berekening :**	B.14008
Project	: 150 kV lijn Leiden - Zoetermeer		
Part	: mast 52		

D&C ENGINEERING

Check equal leg angle-members according to Eurocode 3, prEN 1993-1-1 : 2003

File prEN 1993-1-1.revB.xls d.d. 2-32012, JG

Check section: *Traverse 3 en 4 bovenrand* **verzwaard**

Memberforces : **(Attention! pressure = "-" and tension ="+")**

Compression:	N_{Sd}	=	*0,0*	kN	***Combined forces diagonal:***			
Tension:	N_{Sd}	=	*56,8*	kN	$N_{comb1;c;s;d}$ (min. Compr. or tension)	=	*0*	kN
	$F_{perpend.;s;d}$	=	*0*	kN	$N_{comb2;c;s;d}$ (max. compression)	=	*0*	kN

Angle profile : *H50/50/6* (*1)

h	=	*50*	mm	I_y	=	*128406*	mm^4
b	=	*50*	mm	$W_{y;el;eff.1}$	=	*3612*	mm^3
t_f	=	*6*	mm	$W_{y;el;eff.2}$	=	*8883*	mm^3
y_s	=	*14,5*	mm	i_y	=	*15,0*	mm
A_{bruto}	=	*569*	mm^2	i_v	=	*9,6*	mm

Material :

Mat. qual. Fe360 / Fe510	=	*Fe360*		Permissible stress $f_{y;d}$	=	*235,0*	N/mm^2

Geometry section and bolts:

$L_{y;cr}$	=	*2880*	mm	No. bolts / end / flange	=	*4*	
$L_{v;cr}$	=	*2880*	mm	Type of bolts M / "	=	*16*	
$L_{tot\ (with\ comb.\ buckling)}$	=	*0*	mm	End distance bolt e1	=	*25*	mm
$a^*L_{tot\ (with\ comb.\ buckling)}$	=	*0*	mm	Centre-centre spacing bolt s1	=	*50*	mm
$L_{perpendicular\ force}$	=	*0*	mm	Edge distance bolt e2	=	*22*	mm
Position perpendicular force	=	*1*	(⌉=1, ⌋=2)	Boltquality 4.6/5.6/8.8/10.9	=	*8,8*	
Column profile?	=	*1*	no=1, yes=2	Rolled screw threads	=	*1*	
Thickness tie plate	=	*8*	mm	Dubble strap joint no=1, yes=2	=	*1*	

Summary checks :

1 - Check tension on member :

$UC_1 = N_{Ed} / N_{t.Rd}$ = **0,82** **< 1**

2 - Check perpendicular force on member :

$UC_2 = M_{Ed} / M_{c.Rd}$ = **n.v.t.** **< 1**

3 - Check of the member slenderness :

$UC_3 = C_{max;buc} / C_{perm}$ = **300** **< 200 or 240**

4 - Check stress in member due to compression without excentricity:

$UC_4 = N_{E;d} / (C_{max;buc} \times N_{b;Rd})$ = **0,00** **< 1**

5 - Check stress in member due to compression with excentricity:

$UC_{5-1} = N_{E;d} / (C_{max;buc} \times N_{b;Rd})$ = **n.v.t.** **< 1**

$UC_{5-2} = N_{E;d} / N_{b;Rd} + k_{yy} \times (M_{y;Ed} + DM_{y;Ed}) / (C_{LT} \times M_{y;Rk})$ = **n.v.t.** **< 1**

6 - Check stress with combined buckling of two sections:

$UC_{5-1} = N_{E;d} / (C_{max;buc} \times N_{b;Rd})$ = **n.v.t.** **< 1**

$UC_{5-2} = N_{E;d} / N_{b;Rd} + k_{yy} \times (M_{y;Ed} + DM_{y;Ed}) / (C_{LT} \times M_{y;Rk})$ = **n.v.t.** **< 1**

7 - Check shear stress boltconnection:

$UC_7 = F_{v;Ed} / F_{v;Rd}$ = **0,24** **< 1**

8 - Check bearing stress boltconnection:

$UC_8 = F_{b;Ed} / F_{b;Rd}$ = **0,64** **< 1**

Remarks:

The maximum increase of stress or totalstress is(*2) : **$U.C_{max}$ = 0,82 = 82%**

(*1) Eventually, with the checks of the stresses, the cross-section reduction method is used according to prEN 1993-1-5.

(*2) The total stress or increase of stress has been related to the permissible stress.

Revision :	0	A	B	C	D	E	F
Date :	5-feb-2014						
Name :	M. Glegola						
Checked :	J. Hollaar						

Referentienr :	13039140509	**Berekening :**	B.14008
Project	: 150 kV lijn Leiden - Zoetermeer		
Part	: mast 52		

D&C ENGINEERING

Check equal leg angle-members according to Eurocode 3, prEN 1993-1-1 : 2003

File prEN 1993-1-1.revB.xls d.d. 2-32012, JG

Check section: *Traverse 3 en 4 diagonalen ondervlak*

Memberforces : **(Attention! pressure = "-" and tension ="+")**

Compression:	N_{Sd}	=	-5,9	kN	***Combined forces diagonal:***			
Tension:	N_{Sd}	=	9,1	kN	$N_{comb1;c;s;d}$ (min. Compr. or tension)	=	0	kN
	$F_{perpend.;s;d}$	=	0	kN	$N_{comb2;c;s;d}$ (max. compression)	=	0	kN

Angle profile : *H50/50/5* (*1)

h	=	50	mm	I_y	=	109643	mm^4
b	=	50	mm	$W_{y;el;eff.1}$	=	3049	mm^3
t_f	=	5	mm	$W_{y;el;eff.2}$	=	7811	mm^3
y_s	=	14,0	mm	i_y	=	15,1	mm
A_{bruto}	=	480	mm^2	i_v	=	9,6	mm

Material :

Mat. qual. Fe360 / Fe510	=	Fe360		Permissible stress $f_{y;d}$	=	235,0	N/mm^2

Geometry section and bolts:

$L_{y;cr}$	=	1300	mm	No. bolts / end / flange	=	1	
$L_{v;cr}$	=	1300	mm	Type of bolts M / "	=	16	
$L_{tot\ (with\ comb.\ buckling)}$	=	0	mm	End distance bolt e1	=	25	mm
$a*L_{tot\ (with\ comb.\ buckling)}$	=	0	mm	Centre-centre spacing bolt s1	=	50	mm
$L_{perpendicular\ force}$	=	0	mm	Edge distance bolt e2	=	22	mm
Position perpendicular force	=	1	(⌉=1, ⌋=2)	Boltquality 4.6/5.6/8.8/10.9	=	4,6	
Column profile?	=	1	no=1, yes=2	Rolled screw threads	=	1	
Thickness tie plate	=	8	mm	Dubble strap joint no=1, yes=2	=	1	

Summary checks :

1 - Check tension on member :

$UC_1 = N_{Ed} / N_{t.Rd}$ = **0,24** **< 1**

2 - Check perpendicular force on member :

$UC_2 = M_{Ed} / M_{c.Rd}$ = **n.v.t.** **< 1**

3 - Check of the member slenderness :

$UC_3 = C_{max;buc} / C_{perm}$ = **135** **< 200 or 240**

4 - Check stress in member due to compression without excentricity:

$UC_4 = N_{E;d} / (C_{max;buc} \times N_{b;Rd})$ = **n.v.t.** **< 1**

5 - Check stress in member due to compression with excentricity:

$UC_{5-1} = N_{E;d} / (C_{max;buc} \times N_{b;Rd})$ = **0,14** **< 1**

$UC_{5-2} = N_{E;d} / N_{b;Rd} + k_{yy} \times (M_{y;Ed} + DM_{y;Ed}) / (C_{LT} \times M_{y;Rk})$ = **0,22** **< 1**

6 - Check stress with combined buckling of two sections:

$UC_{5-1} = N_{E;d} / (C_{max;buc} \times N_{b;Rd})$ = **n.v.t.** **< 1**

$UC_{5-2} = N_{E;d} / N_{b;Rd} + k_{yy} \times (M_{y;Ed} + DM_{y;Ed}) / (C_{LT} \times M_{y;Rk})$ = **n.v.t.** **< 1**

7 - Check shear stress boltconnection:

$UC_7 = F_{v;Ed} / F_{v;Rd}$ = **0,30** **< 1**

8 - Check bearing stress boltconnection:

$UC_8 = F_{b;Ed} / F_{b;Rd}$ = **0,50** **< 1**

Remarks:

The maximum increase of stress or totalstress is(*2) : **$U.C_{max}$ = 0,50 = 50%**

(*1) Eventually, with the checks of the stresses, the cross-section reduction method is used according to prEN 1993-1-5.

(*2) The total stress or increase of stress has been related to the permissible stress.

Revision :	0	A	B	C	D	E	F
Date :	5-feb-2014						
Name :	M. Glegola						
Checked :	J. Hollaar						

Referentienr :	13039140509	**Berekening :**	B.14008
Project	: 150 kV lijn Leiden - Zoetermeer		
Part	: mast 52		

D&C ENGINEERING

Check equal leg angle-members according to Eurocode 3, prEN 1993-1-1 : 2003

File prEN 1993-1-1.revB.xls d.d. 2-32012, JG

Check section: *Traverse 5 en 6 bovenrand*

Memberforces : **(Attention! pressure = "-" and tension ="+")**

Compression:	N_{Sd}	=	-23,2	kN	***Combined forces diagonal:***			
Tension:	N_{Sd}	=	39,0	kN	$N_{comb1;c;s;d}$ (min. Compr. or tension)	=	0	kN
	$F_{perpend.;s;d}$	=	0	kN	$N_{comb2;c;s;d}$ (max. compression)	=	0	kN

Angle profile : *H65/50/6* (*1)

h	=	65	mm	I_y	=	271004	mm^4
b	=	50	mm	$W_{y;el;eff.1}$	=	5202	mm^3
t_f	=	6	mm	$W_{y;el;eff.2}$	=	21006	mm^3
y_s	=	12,9	mm	i_y	=	20,3	mm
A_{bruto}	=	658	mm^2	i_v	=	10,5	mm

Material :

Mat. qual. Fe360 / Fe510	=	Fe360		Permissible stress $f_{y;d}$	=	235,0	N/mm^2

Geometry section and bolts:

$L_{y;cr}$	=	3452	mm	No. bolts / end / flange	=	2	
$L_{v;cr}$	=	1726	mm	Type of bolts M / "	=	16	
$L_{tot\ (with\ comb.\ buckling)}$	=	0	mm	End distance bolt e1	=	25	mm
$a*L_{tot\ (with\ comb.\ buckling)}$	=	0	mm	Centre-centre spacing bolt s1	=	50	mm
$L_{perpendicular\ force}$	=	0	mm	Edge distance bolt e2	=	22	mm
Position perpendicular force	=	1	(⌉=1, ⌋=2)	Boltquality 4.6/5.6/8.8/10.9	=	4,6	
Column profile?	=	1	no=1, yes=2	Rolled screw threads	=	1	
Thickness tie plate	=	8	mm	Dubble strap joint no=1, yes=2	=	1	

Summary checks :

1 - Check tension on member :

$UC_1 = N_{Ed} / N_{t.Rd}$ = **0,57** **< 1**

2 - Check perpendicular force on member :

$UC_2 = M_{Ed} / M_{c.Rd}$ = **n.v.t.** **< 1**

3 - Check of the member slenderness :

$UC_3 = C_{max;buc} / C_{perm}$ = **170** **< 200 or 240**

4 - Check stress in member due to compression without excentricity:

$UC_4 = N_{E;d} / (C_{max;buc} \times N_{b;Rd})$ = **0,58** **< 1**

5 - Check stress in member due to compression with excentricity:

$UC_{5-1} = N_{E;d} / (C_{max;buc} \times N_{b;Rd})$ = **n.v.t.** **< 1**

$UC_{5-2} = N_{E;d} / N_{b;Rd} + k_{yy} \times (M_{y;Ed} + DM_{y;Ed}) / (C_{LT} \times M_{y;Rk})$ = **n.v.t.** **< 1**

6 - Check stress with combined buckling of two sections:

$UC_{5-1} = N_{E;d} / (C_{max;buc} \times N_{b;Rd})$ = **n.v.t.** **< 1**

$UC_{5-2} = N_{E;d} / N_{b;Rd} + k_{yy} \times (M_{y;Ed} + DM_{y;Ed}) / (C_{LT} \times M_{y;Rk})$ = **n.v.t.** **< 1**

7 - Check shear stress boltconnection:

$UC_7 = F_{v;Ed} / F_{v;Rd}$ = **0,65** **< 1**

8 - Check bearing stress boltconnection:

$UC_8 = F_{b;Ed} / F_{b;Rd}$ = **0,89** **< 1**

Remarks:

The maximum increase of stress or totalstress is(*2) : **$U.C_{max}$ = 0,89 = 89%**

(*1) Eventually, with the checks of the stresses, the cross-section reduction method is used according to prEN 1993-1-5.

(*2) The total stress or increase of stress has been related to the permissible stress.

Revision :	0	A	B	C	D	E	F
Date :	5-feb-2014						
Name :	M. Glegola						
Checked :	J. Hollaar						

Referentienr :	13039140509	**Berekening :**	B.14008
Project	: 150 kV lijn Leiden - Zoetermeer		
Part	: mast 52		

D&C ENGINEERING

Check equal leg angle-members according to Eurocode 3, prEN 1993-1-1 : 2003

File prEN 1993-1-1.revB.xls d.d. 2-32012, JG

Check section: *Traverse 5 en 6 diagonalen ondervlak L45/45/5*

Memberforces : **(Attention! pressure = "-" and tension ="+")**

Compression:	N_{Sd}	=	-6,8	kN	***Combined forces diagonal:***			
Tension:	N_{Sd}	=	6,4	kN	$N_{comb1;c;s;d}$ (min. Compr. or tension)	=	0	kN
	$F_{perpend.;s;d}$	=	0	kN	$N_{comb2;c;s;d}$ (max. compression)	=	0	kN

Angle profile : *H45/45/5* (*1)

h	=	45	mm	I_y	=	78410	mm^4
b	=	45	mm	$W_{y;el;eff.1}$	=	2435	mm^3
t_f	=	5	mm	$W_{y;el;eff.2}$	=	6129	mm^3
y_s	=	12,8	mm	i_y	=	13,5	mm
A_{bruto}	=	430	mm^2	i_v	=	8,6	mm

Material :

Mat. qual. Fe360 / Fe510	=	Fe360		Permissible stress $f_{y;d}$	=	235,0	N/mm^2

Geometry section and bolts:

$L_{y;cr}$	=	2162	mm	No. bolts / end / flange	=	1	
$L_{v;cr}$	=	2162	mm	Type of bolts M / "	=	16	
$L_{tot\ (with\ comb.\ buckling)}$	=	0	mm	End distance bolt e1	=	25	mm
$a*L_{tot\ (with\ comb.\ buckling)}$	=	0	mm	Centre-centre spacing bolt s1	=	50	mm
$L_{perpendicular\ force}$	=	0	mm	Edge distance bolt e2	=	22	mm
Position perpendicular force	=	1	(⌉=1, ⌋=2)	Boltquality 4.6/5.6/8.8/10.9	=	4,6	
Column profile?	=	1	no=1, yes=2	Rolled screw threads	=	1	
Thickness tie plate	=	8	mm	Dubble strap joint no=1, yes=2	=	1	

Summary checks :

1 - Check tension on member :

$UC_1 = N_{Ed} / N_{t.Rd}$ = **0,17** **< 1**

2 - Check perpendicular force on member :

$UC_2 = M_{Ed} / M_{c.Rd}$ = **n.v.t.** **< 1**

3 - Check of the member slenderness :

$UC_3 = C_{max;buc} / C_{perm}$ = **251** **< 200 or 240**

4 - Check stress in member due to compression without excentricity:

$UC_4 = N_{E;d} / (C_{max;buc} \times N_{b;Rd})$ = **n.v.t.** **< 1**

5 - Check stress in member due to compression with excentricity:

$UC_{5-1} = N_{E;d} / (C_{max;buc} \times N_{b;Rd})$ = **0,55** **< 1**

$UC_{5-2} = N_{E;d} / N_{b;Rd} + k_{yy} \times (M_{y;Ed} + DM_{y;Ed}) / (C_{LT} \times M_{y;Rk})$ = **0,67** **< 1**

6 - Check stress with combined buckling of two sections:

$UC_{5-1} = N_{E;d} / (C_{max;buc} \times N_{b;Rd})$ = **n.v.t.** **< 1**

$UC_{5-2} = N_{E;d} / N_{b;Rd} + k_{yy} \times (M_{y;Ed} + DM_{y;Ed}) / (C_{LT} \times M_{y;Rk})$ = **n.v.t.** **< 1**

7 - Check shear stress boltconnection:

$UC_7 = F_{v;Ed} / F_{v;Rd}$ = **0,23** **< 1**

8 - Check bearing stress boltconnection:

$UC_8 = F_{b;Ed} / F_{b;Rd}$ = **0,35** **< 1**

Remarks:

The maximum increase of stress or totalstress is(*2) : **$U.C_{max}$ = 0,67 = 67%**

(*1) Eventually, with the checks of the stresses, the cross-section reduction method is used according to prEN 1993-1-5.

(*2) The total stress or increase of stress has been related to the permissible stress.

Revision :	0	A	B	C	D	E	F
Date :	5-feb-2014						
Name :	M. Glegola						
Checked :	J. Hollaar						

Referentienr :	13039140509	**Berekening :**	B.14008
Project	: 150 kV lijn Leiden - Zoetermeer		
Part	: mast 52		

D&C ENGINEERING

Check equal leg angle-members according to Eurocode 3, prEN 1993-1-1 : 2003

File prEN 1993-1-1.revB.xls d.d. 2-32012, JG

Check section: *Traverse 5 en 6 diagonalen ondervlak L45/30/5*

Memberforces : **(Attention! pressure = "-" and tension ="+")**

Compression:	N_{Sd}	=	-10,1	kN	***Combined forces diagonal:***			
Tension:	N_{Sd}	=	11,2	kN	$N_{comb1;c;s;d}$ (min. Compr. or tension)	=	0	kN
	$F_{perpend.;s;d}$	=	0	kN	$N_{comb2;c;s;d}$ (max. compression)	=	0	kN

Angle profile : *H45/30/5* (*1)

h	=	45	mm	I_y	=	69843	mm^4
b	=	30	mm	$W_{y;el;eff.1}$	=	1877	mm^3
t_f	=	5	mm	$W_{y;el;eff.2}$	=	8962	mm^3
y_s	=	7,8	mm	i_y	=	14,1	mm
A_{bruto}	=	352	mm^2	i_v	=	6,4	mm

Material :

Mat. qual. Fe360 / Fe510	=	Fe360		Permissible stress $f_{y;d}$	=	235,0	N/mm^2

Geometry section and bolts:

$L_{y;cr}$	=	1092	mm	No. bolts / end / flange	=	1	
$L_{v;cr}$	=	1092	mm	Type of bolts M / "	=	16	
$L_{tot\ (with\ comb.\ buckling)}$	=	0	mm	End distance bolt e1	=	25	mm
$a^*L_{tot\ (with\ comb.\ buckling)}$	=	0	mm	Centre-centre spacing bolt s1	=	50	mm
$L_{perpendicular\ force}$	=	0	mm	Edge distance bolt e2	=	22	mm
Position perpendicular force	=	1	(⌉=1, ⌋=2)	Boltquality 4.6/5.6/8.8/10.9	=	4,6	
Column profile?	=	1	no=1, yes=2	Rolled screw threads	=	1	
Thickness tie plate	=	8	mm	Dubble strap joint no=1, yes=2	=	1	

Summary checks :

1 - Check tension on member :

$UC_1 = N_{Ed} / N_{t.Rd}$ = **0,30** **< 1**

2 - Check perpendicular force on member :

$UC_2 = M_{Ed} / M_{c.Rd}$ = **n.v.t.** **< 1**

3 - Check of the member slenderness :

$UC_3 = C_{max;buc} / C_{perm}$ = **171** **< 200 or 240**

4 - Check stress in member due to compression without excentricity:

$UC_4 = N_{E;d} / (C_{max;buc} \times N_{b;Rd})$ = **n.v.t.** **< 1**

5 - Check stress in member due to compression with excentricity:

$UC_{5-1} = N_{E;d} / (C_{max;buc} \times N_{b;Rd})$ = **0,49** **< 1**

$UC_{5-2} = N_{E;d} / N_{b;Rd} + k_{yy} \times (M_{y;Ed} + DM_{y;Ed}) / (C_{LT} \times M_{y;Rk})$ = **0,59** **< 1**

6 - Check stress with combined buckling of two sections:

$UC_{5-1} = N_{E;d} / (C_{max;buc} \times N_{b;Rd})$ = **n.v.t.** **< 1**

$UC_{5-2} = N_{E;d} / N_{b;Rd} + k_{yy} \times (M_{y;Ed} + DM_{y;Ed}) / (C_{LT} \times M_{y;Rk})$ = **n.v.t.** **< 1**

7 - Check shear stress boltconnection:

$UC_7 = F_{v;Ed} / F_{v;Rd}$ = **0,37** **< 1**

8 - Check bearing stress boltconnection:

$UC_8 = F_{b;Ed} / F_{b;Rd}$ = **0,61** **< 1**

Remarks:

The maximum increase of stress or totalstress is(*2) : **$U.C_{max}$ = 0,61 = 61%**

(*1) Eventually, with the checks of the stresses, the cross-section reduction method is used according to prEN 1993-1-5.

(*2) The total stress or increase of stress has been related to the permissible stress.

Revision :	0	A	B	C	D	E	F
Date :	5-feb-2014						
Name :	M. Glegola						
Checked :	J. Hollaar						

Referentienr :	13039140509	**Berekening :**	B.14008
Project	: 150 kV lijn Leiden - Zoetermeer		
Part	: mast 52		

D&C ENGINEERING

Check equal leg angle-members according to Eurocode 3, prEN 1993-1-1 : 2003

File prEN 1993-1-1.revB.xls d.d. 2-32012, JG

Check section: *Traverse 5 en 6 diagonalen v.v en a.v.*

Memberforces : **(Attention! pressure = "-" and tension ="+")**

Compression:	N_{Sd}	=	-2,4	kN	***Combined forces diagonal:***			
Tension:	N_{Sd}	=	1,1	kN	$N_{comb1;c;s;d}$ (min. Compr. or tension)	=	0	kN
	$F_{perpend.;s;d}$	=	0	kN	$N_{comb2;c;s;d}$ (max. compression)	=	0	kN

Angle profile : H45/30/5 (*1)

h	=	45	mm	I_y	=	69843	mm^4
b	=	30	mm	$W_{y;el;eff.1}$	=	1877	mm^3
t_f	=	5	mm	$W_{y;el;eff.2}$	=	8962	mm^3
y_s	=	7,8	mm	i_y	=	14,1	mm
A_{bruto}	=	352	mm^2	i_v	=	6,4	mm

Material :

Mat. qual. Fe360 / Fe510	=	Fe360		Permissible stress $f_{y;d}$	=	235,0	N/mm^2

Geometry section and bolts:

$L_{y;cr}$	=	1911	mm	No. bolts / end / flange	=	1	
$L_{v;cr}$	=	1911	mm	Type of bolts M / "	=	16	
$L_{tot\ (with\ comb.\ buckling)}$	=	0	mm	End distance bolt e1	=	25	mm
$a*L_{tot\ (with\ comb.\ buckling)}$	=	0	mm	Centre-centre spacing bolt s1	=	50	mm
$L_{perpendicular\ force}$	=	0	mm	Edge distance bolt e2	=	22	mm
Position perpendicular force	=	1	(⌉=1, ⌋=2)	Boltquality 4.6/5.6/8.8/10.9	=	4,6	
Column profile?	=	1	no=1, yes=2	Rolled screw threads	=	1	
Thickness tie plate	=	8	mm	Dubble strap joint no=1, yes=2	=	1	

Summary checks :

1 - Check tension on member :

$UC_1 = N_{Ed} / N_{t.Rd}$ = **0,03** **< 1**

2 - Check perpendicular force on member :

$UC_2 = M_{Ed} / M_{c.Rd}$ = **n.v.t.** **< 1**

3 - Check of the member slenderness :

$UC_3 = C_{max;buc} / C_{perm}$ = **299** **< 200 or 240**

4 - Check stress in member due to compression without excentricity:

$UC_4 = N_{E;d} / (C_{max;buc} \times N_{b;Rd})$ = **n.v.t.** **< 1**

5 - Check stress in member due to compression with excentricity:

$UC_{5-1} = N_{E;d} / (C_{max;buc} \times N_{b;Rd})$ = **0,33** **< 1**

$UC_{5-2} = N_{E;d} / N_{b;Rd} + k_{yy} \times (M_{y;Ed} + DM_{y;Ed}) / (C_{LT} \times M_{y;Rk})$ = **0,36** **< 1**

6 - Check stress with combined buckling of two sections:

$UC_{5-1} = N_{E;d} / (C_{max;buc} \times N_{b;Rd})$ = **n.v.t.** **< 1**

$UC_{5-2} = N_{E;d} / N_{b;Rd} + k_{yy} \times (M_{y;Ed} + DM_{y;Ed}) / (C_{LT} \times M_{y;Rk})$ = **n.v.t.** **< 1**

7 - Check shear stress boltconnection:

$UC_7 = F_{v;Ed} / F_{v;Rd}$ = **0,08** **< 1**

8 - Check bearing stress boltconnection:

$UC_8 = F_{b;Ed} / F_{b;Rd}$ = **0,06** **< 1**

Remarks:

The maximum increase of stress or totalstress is(*2) : **$U.C_{max}$ = 0,36 = 36%**

(*1) Eventually, with the checks of the stresses, the cross-section reduction method is used according to prEN 1993-1-5.

(*2) The total stress or increase of stress has been related to the permissible stress.

Revision :	0	A	B	C	D	E	F
Date :	5-feb-2014						
Name :	M. Glegola						
Checked :	J. Hollaar						

3. CONTROLE BEREKENING MAST 55

D&C ENGINEERING
design and construct

Postbus 1
2950 AA Alblasserdam
Nieuwland Parc 301 302
2952 DD Alblasserdam
T +31 (0) 78 691 9222
E info@dcengineering.nl
W www.dcengineering.nl

Omleiding mast 52 tot 54 en noodmast 74, 150 kv-Lijn Leiden-Zoetermeer

Onderwerp	:	Controleberekening mast 55, 150 kV-lijn Zoetermeer -Leiden
Opdrachtgever	:	Cofely Fabricom Koen Pieters
Referentienr	:	1303914509
Opgesteld	:	S. Al Mashta
Gecontroleerd	:	J.Hollaar
Goedgekeurd	:	J.Hollaar
Revisie	:	0
Datum	:	18-Feb-2014
D&C documentnr.	:	B.14009

2012 © All rights reserved. Disclosure to third parties and copying of this document or any part thereof, or the use of any information contained therein for the purpose other than provided for by this document, is not permitted, except with the prior and express written consent of D&C ENGINEERING, Alblasserdam, The Netherlands.

H:\Projecten\13.039 Fabricom vervangen mast 74 150 kV-lijn Leiden-Zoetermeer\1303914509, noodmast P74 etc\02 - Documenten\Mast 55\B14009_rev0a.xlsx

Rev.	Datum	Omschrijving	Opgesteld	Gecontr.	Goedgek.
0	18-Feb-14	Controleberekening mast 55, 150 kV-lijn Zoetermeer -Leiden	S. Al Mashta	J.Hollaar	J.Hollaar
A					

Inhoudsopgave

1	Algemeen
1.1	Inleiding
1.2	Normen en tekeningen en documenten en andere uitgangspunten
1.3	Nadere bepalingen
1.4	Materialen
1.5	Overzicht mast
1.5.1	Overzicht voorvlak mastlichaam
1.5.2	Overzicht zijvlak mastlichaam
2	Ontwerpgegevens mast
2.1	Ontwerpcode
2.2	Ontwerpgegevens
2.3	Geleidergegevens
2.4	Gegevens isolatoren
2.5	Mastbelastingen uit geleiders
3.0	Berekening mast
3.1	Uitgangspunten berekening
3.2	Berekening met behulp van computerprogramma
4.0	Fundatie
4.1	Algemeen
4.2	Fundatie belastingen
4.3	Berekening Fundatie
5.0	Resultaten
5.1	Overzicht spanningniveau's
5.2	Overzicht Verzwaring
Bijlage A	Geleiderbelastingen
Bijlage B	Berekening Mast 55; Scia Engineer
Bijlage C	Controle staven mastlichaam

1 Algemeen

1.1 Inleiding

Door Cofely Fabricom is aan D&C engineering te Alblasserdam opdracht verstrekt voor o.a. het uitvoeren van een controleberekening voor mast nr.55 in de 150 kV-lijn Zoetermeer -Leiden. Mast 55 moet gecontroleerd worden, omdat rond de nieuwe 380kv-lijn een omleiding nodig is. Voor mast 54 komt een portaal waardoor de belasting op mast 55 wijzigd.
De berekeningen worden uitgevoerd conform de vigerende norm NEN-EN-50341-1 en 3.
Voor de geleiderbelasting vanuit de bliksemdraden wordt ijsgebied A aangehouden, conform afspraak (aanvullende eis van TenneT), zoals vermeld in: "Lijnen; Standaard programma van eisen; PVE.05.000;25 november 2010; versie 1.0".

1.2 Normen en tekeningen en documenten en andere uitgangspunten

Tekeningen :

Mast nr.55 in de 150 kV-lijn Zoetermeer -Leiden.	
tek.nr.	omschrijving
6775-5-E	Onderstuk HU
6775-6-D	Onderste tussenstuk HU
6775-7-E	Tweede tussenstuk HU
6775-8-E	Eerste bovenstuk HU
6775-9-D	Tweede bovenstuk HU
6775-10-E	Ondertraverse HU
6775-11-E	Bovenste traverse HU

Normen:

NEN-EN 50341-1 : 2001
NEN-EN 50341-3 : 2001

Andere uitgangspunten:

Fundatiehoogte 0,50 m boven maaiveld.

1.3 Nadere bepalingen

De geleiderbelastingen en de benodigde verzwaringen van de mastconstructies worden berekend volgens NEN-EN 50341-1 en 3 met spanningscontroles volgens EC-3.

De mastconstructie wordt 3D doorgerekend.

De gestelde slankheidsrestricties in NEN-EN 50341-1 en 3 worden geacht niet van toepassing te zijn, omdat in sommige gevallen in het verleden grotere slankheden zijn toegestaan.

Voor de mastconstructie zal een maximum totaalspanning van 100% worden gehanteerd.

Er is gerekend dat er geen antenne-opstellingen in de te controleren mastconstructie aanwezig zijn.

De berekening is uitgevoerd met het rekenpakket Scia LTA programma 2013

Voor de geleiderbelasting vanuit de bliksemdraden wordt gerekend met ijsgebied A. Zie richtlijn van Tennet: "Lijnen; standaard programma van eisen; PVE.05.000; 25 november 2010; versie 1.0; artikel 5.3".

1.4 Materialen

Materiaal randen	:	Fe360	(Fe510 nieuw)
Materiaal diagonalen	:	Fe360	(Fe510 nieuw)
Materiaal bouten	:	4.6	(8.8 nieuw)

1.5 Overzicht mast

1.5.1 Overzicht voorvlak mastlichaam

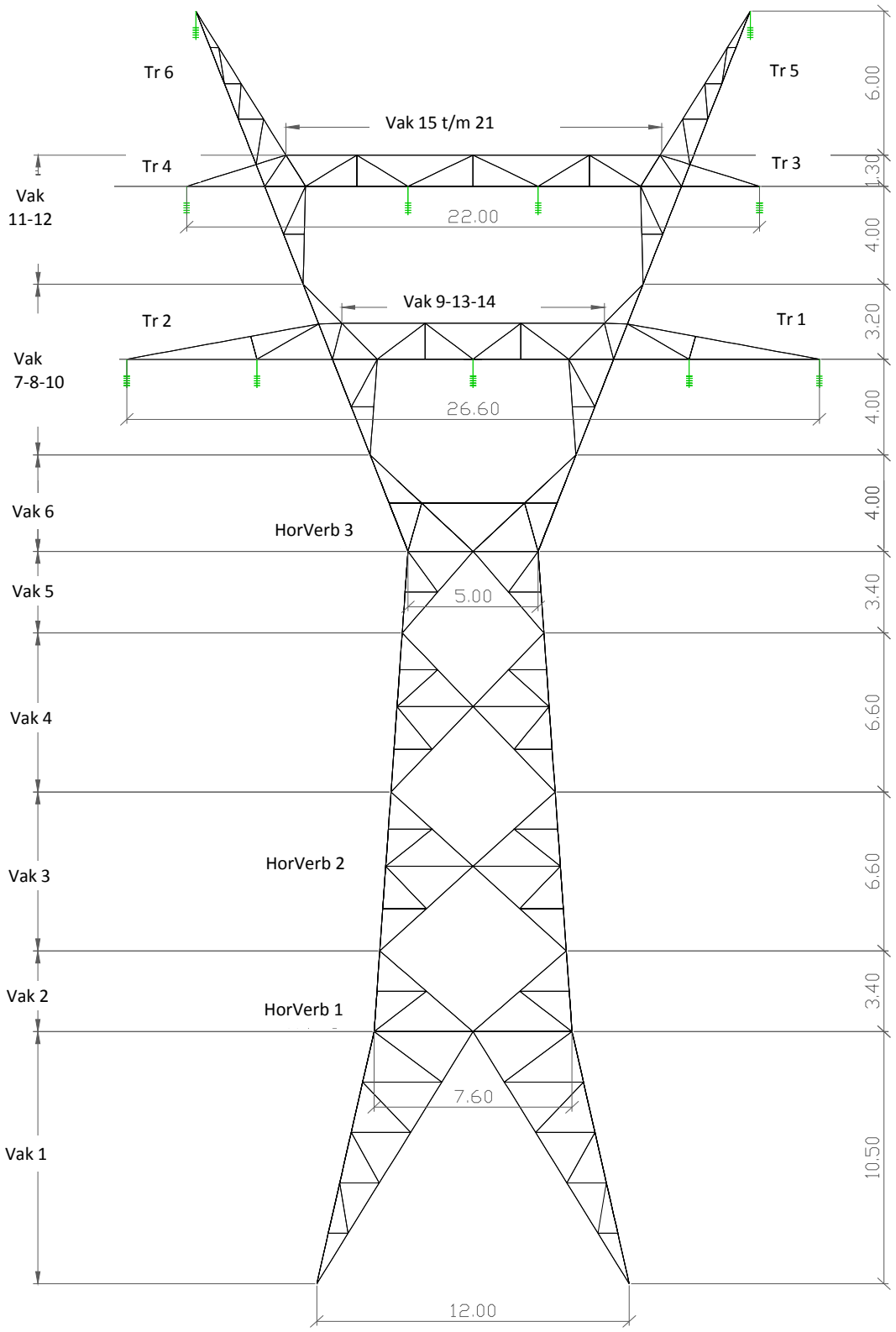

1.5.2 Overzicht zijvlak mastlichaam

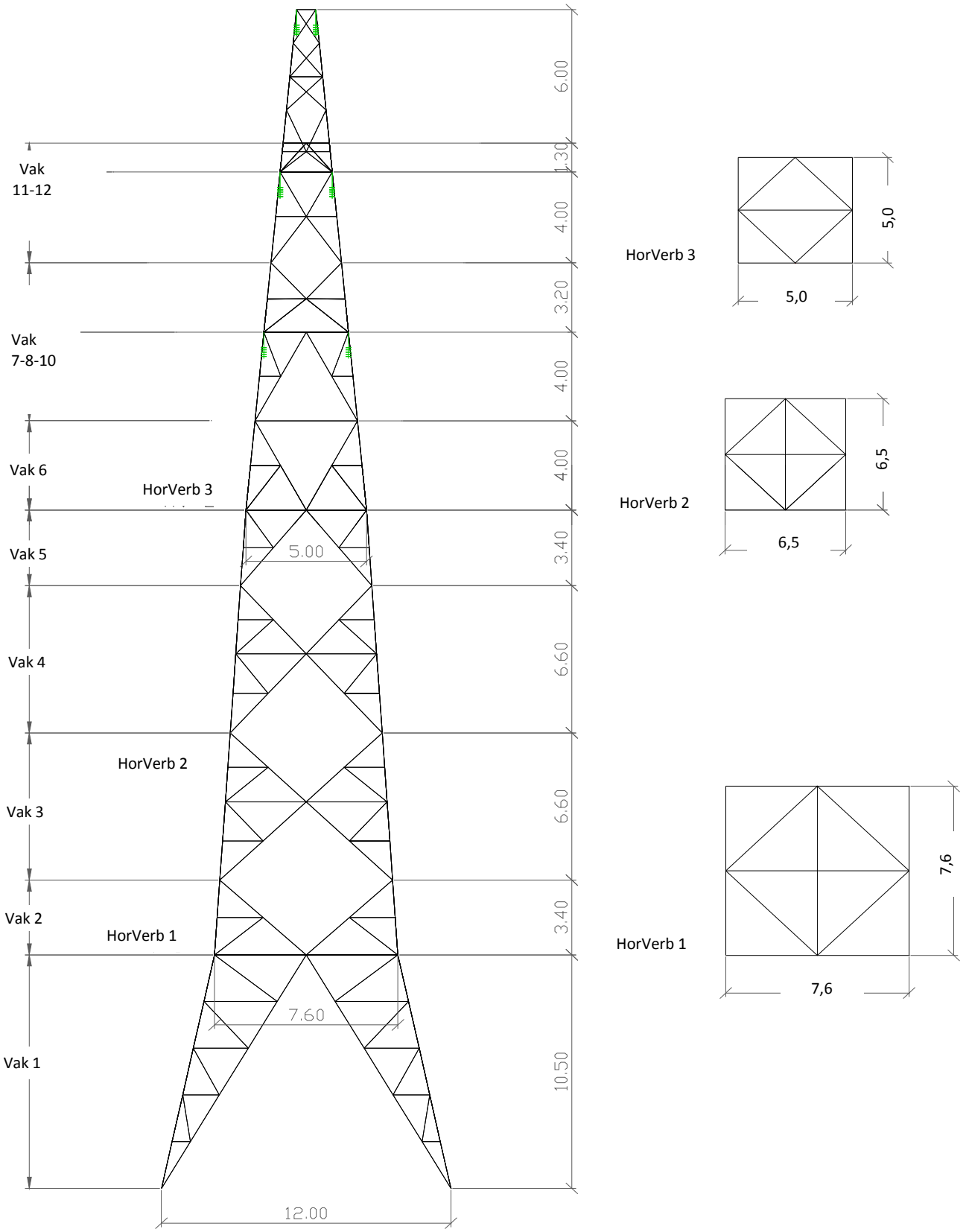

2 Ontwerpgegevens mast

2.1 Ontwerpcode

De berekening is gebaseerd op NEN-en 50341-1 en -3-15
Bovengrondse hoogspanningslijnen.

2.2 Ontwerpgegevens

Lijnhoek	-	179,38° -174,70°	
Windgebied	-	II	
Bebouwing	-	onbebouwd	
IJsgebied bliksemdraden	-	**A**	
IJsgebied fasedraden	-	B	
Toeslag eigengewicht	-	20%	
Totale hoogte van de mast	-	53,0 m	*)
Hoogte traverse 1	-	38,5 m	*)
Hoogte traverse 2	-	45,7 m	*)

Hoogte voet boven maaiveld	-	0,5 m	
Veldlengten	-	319 - 421 m	
Bliksemdraden	-	Br 50	(2x)
Factor β bliksemdraad	-	1,0	
Fasedraden	-	CU 185	(9 x 2-bundel)
Factor β fasedraad	-	0,8	
Boutklasse	-	8.8	
Materiaal mastranden	-	S235	
Materiaal overige mast	-	S235	
	-		

*) t.o.v. bovenzijde fundatiepoer

2.3 Geleidergegevens

		Br 50	CU 185
		Bliksemdraad	fasedraad
Eigen gewicht	N/m	4,43	16,62
Doorsnede	mm2	48,36	181,6
Diameter	mm	9	17,5
Elasticiteitsmod.	N/mm2	130000	130000
Lin. Uitzettingsc.	1/°C	0,000017	0,000017
Breeksterkte	N	28390,7	72760,5

2.4 Gegevens isolatoren

Dubbele afspanning

lengte isolatorketting	2	m	
totale gewicht afspanning per zijde	2,5	kN	
diameter isolator schaal	255	mm	(voor wind 2/3*255mm =170mm)

2.5 Mastbelastingen uit geleiders

Voor belastingen uit de geleiders wordt verwezen naar bijlage A van dit rapport.

3 Berekening mast

3.1 Uitgangspunten berekening

Ontwerp-norm	NEN-EN 50341-3
Boutkwaliteit	4.6
Staalkwaliteit	S235
Toeslag eigengewicht	20%
Referentie periode	50 jaar

Voor verdere gegevens wordt verwezen naar hoofstuk 2.0

3.2 Berekening met behulp van computerprogramma

SCIA - ESA-Engineer - LTA

Voor de berekening van de mastconstructie wordt verwezen naar bijlage B van dit rapport.

4 Fundatie

4.1 Algemeen

Voor fundatiebelastingen zie Bijlage B:(maximale belastingen per knoop en Resultante op fundatie).
Deze belastingen zijn opgesteld en weergegeven conform NEN-EN 50341-1 en 3 november 2001; Bovengrondse hoogspanningslijnen.

Per fundatie-belastingweergave is dit opgegeven inclusief combinatie- en belastingfactoren.

Aan de hand van de bovengenoemde belastinggegevens en de sonderinggegevens kan de fundatie berekend worden.

4.2 Fundatie belastingen

Reacties

Lineaire berekening, Extreem : Globaal
Selectie : Alle
Klasse : All UGT

Steunpunt	BG	Rx [kN]	Ry [kN]	Rz [kN]	Mx [kNm]	My [kNm]	Mz [kNm]
Sn3/N306	sp3F/26	**-302,70**	-235,69	**1430,16**	0,00	0,00	0,00
Sn1/N248	sp3R/64	**290,70**	222,11	1357,34	0,00	0,00	0,00
Sn3/N306	sp1aF/180	-298,87	**-240,62**	1406,93	0,00	0,00	0,00
Sn1/N248	sp1aR/200	289,03	**230,80**	1352,01	0,00	0,00	0,00
Sn1/N248	sp3F-p/2	-226,89	-166,25	**-1083,93**	0,00	0,00	0,00
Sn1/N248	1a/201	34,57	24,49	131,50	**0,00**	**0,00**	**0,00**

Resultante op Fundering

Lineaire berekening, Extreem : Globaal
Selectie : Alle
Klasse : All UGT

BG	Steunpunt	Extreem	horiz. component [kN]	resultante [kN]	Hoek [deg]	helling(afschot) [-]	Rx [kN]	Ry [kN]	Rz [kN]
sp3F/206	Sn3/N306	Rz	**10,54**	1430,20	30,15	135,64	2,70	10,19	1430,16
sp3F/26	Sn3/N306	Rx	**384,41**	386,53	173,05	-0,11	-302,70	-236,95	-40,45
sp1aF/203	Sn2/N298	Ry	214,95	**283,06**	125,93	-0,86	-33,87	-212,27	-184,17
sp3F/206	Sn3/N306	Rz	10,54	**1430,20**	30,15	135,64	2,70	10,19	1430,16
sp1aR-p/205	Sn3/N306	Rz	148,16	1036,96	**-179,63**	-6,93	-104,09	-105,43	-1026,33
sp1aF/180	Sn3/N306	Ry	383,69	425,81	**173,84**	-0,48	-298,87	-240,62	-184,65
sp1aR-p/205	Sn3/N306	Rz	148,16	1036,96	-179,63	**-6,93**	-104,09	-105,43	-1026,33
sp3F/206	Sn3/N306	Rz	10,54	1430,20	30,15	**135,64**	2,70	10,19	1430,16
sp3F/26	Sn3/N306	Rx	384,41	386,53	173,05	-0,11	**-302,70**	-236,95	-40,45
sp3R/64	Sn1/N248	Rx	366,69	1409,20	172,55	3,71	**290,70**	223,50	1360,66
sp1aF/180	Sn3/N306	Ry	383,69	425,81	173,84	-0,48	-298,87	**-240,62**	-184,65
sp1aR/200	Sn1/N248	Ry	369,88	1401,69	173,61	3,66	289,03	**230,80**	1352,01
sp3F-p/2	Sn1/N248	Rx	281,65	1119,92	-8,67	-3,85	-226,89	-166,87	**-1083,93**
sp3F/206	Sn3/N306	Rz	10,54	1430,20	30,15	135,64	2,70	10,19	**1430,16**

4.3 Berekening Fundatie

De berekening van de fundatie, met de gegevens zoals de sonderingen, is een op zichzelf staande berekening, welke niet valt onder de scope van deze opdracht.

5 Resultaten

Uit de controleberekening van de mast volgen de volgende resultaten:

(Opmerking: De verschillende berekeningen zijn te vinden in de bijlagen B en C)

5.1 Overzicht spanningniveau's

Sheet nr.	Vak	Staaf type	Doorsnede	Staalkwal. N/mm²	Lengte (m) $L_{y;cr}$	Lengte (m) $L_{v;cr}$	Bout type	Kwalit.	Aantal bouten	Max. U.C. verbinding	Max. druk N_{Ed} (kN)	U.C	Max. trek N_{Ed} (kN)	U.C	Punt last $F_{per;sd}$ (kN)	U.C	Opmerkingen
M01	Vak 1	Randen L200x200x26	H200/200/26	235	1825	1825	M 30	4,6	10	0,77	-1657,72	0,82	1344,49	0,64	0,00	n.v.t.	
M02	Vak 1	Diagonalen L130x13x12	H130/130/12	235	2048	2048	M 24	4,6	4	1,00	-271,75	0,56	256,83	0,58	0,00	n.v.t.	
M03	Vak 1	Horizontale En verticale Knikverkorters L50x50x5	H50/50/5	235	2409	2409	M 16	4,6	1	0,08	-2,13	0,19	2,13	0,05	1,50	0,94	
M04	Vak 1	Horizontale en Verticale Knikverkorters L60x60x6	H60/60/6	235	2533	2533	M 16	4,6	1	0,46	-13,95	0,69	13,95	0,25	1,50	0,76	
M05	Vak 1	Horizontale en Verticale Knikverkorters L55x55x6	H55/55/6	235	4478	4478	M 16	4,6	1	0,10	-3,02	0,49	3,02	0,05	1,50	0,81	
M06	Vak 1	Horizontale en Verticale Knikverkorters L65x65x7	H65/65/7	235	3322	3322	M 16	4,6	1	0,79	-23,73	1,24	23,73	0,28	1,50	0,74	Staven uitwisselen in L70x70x7, met staalkwal. S355, en bouten uitwisselen in kwal. 8.8, zie berekening sheet V06
M07	Vak 2	Randen L200x200x26	H200/200/26	235	1690	1690	M 30	4,6	10	0,73	-1568,46	0,76	1291,38	0,62	0,00	n.v.t.	
M08	Vak 2	Horizontale Knikverkorters L55x55x6	H55/55/6	235	1900	1900	M 16	4,6	1	0,69	-20,89	0,85	20,89	0,38	1,50	0,69	
M09	Vak 2	Schuine Knikverkorters L55x55x6	H55/55/6	235	2620	2620	M 16	4,6	1	0,96	-28,83	1,82	28,83	0,52	0,00	n.v.t.	Staven uitwisselen in L70x70x7, met staalkwal. S355, en bouten uitwisselen in kwal. 8.8, zie berekening sheet V09
M10	Vak 2	Verticale verbanden L150x100x10	H150/100/10	235	4916	2458	M 24	4,6	3	0,82	-167,32	0,62	150,52	0,42	0,00	n.v.t.	
M11	Vak 3	Randen L200x200x26	H200/200/26	235	1786	1786	M 30	4,6	10	0,68	-1473,98	0,72	1210,73	0,58	0,00	n.v.t.	
M12	Vak 3	Horizontale Knikverkorters L55x55x6	H55/55/6	235	1676	1676	M 16	4,6	1	0,29	-8,74	0,31	8,74	0,16	1,50	0,61	
M13	Vak 3	Verticale Knikverkorters L55x55x6	H55/55/6	235	2360	2360	M 16	4,6	1	0,34	-10,16	0,57	10,16	0,18	0,00	n.v.t.	
M14	Vak 3	Verticale verbanden L150x100x12	H150/100/12	235	5028	2514	M 24	4,6	4	0,73	-181,18	0,58	197,44	0,46	0,00	n.v.t.	
M15	Vak 4	Randen L200x200x20	H200/200/20	235	1784	1784	M 30	4,6	10	0,55	-1185,13	0,58	952,01	0,46	0,00	n.v.t.	
M16	Vak 4	Horizontale Knikverkorters L50x50x5	H50/50/5	235	1460	1460	M 16	4,6	1	0,34	-9,47	0,41	9,47	0,21	1,50	0,82	
M16a	Vak 4	Horizontale staven L60x60x6	H60/60/6	235	2920	2920	M 16	4,6	1	0,17	-4,40	0,27	4,79	0,09	1,50	0,88	
M17	Vak 4	Verticale Knikverkorters L50x50x5	H50/50/5	235	2080	2080	M 16	4,6	1	0,26	-7,32	0,51	7,32	0,16	0,00	n.v.t.	
M18	Vak 4	Verticale verbanden L150x100x14	H150/100/14	235	4755	2377	M 24	4,6	4	0,89	-242,51	0,63	223,83	0,46	0,00	n.v.t.	
M19	Vak 5	Randen L200x200x20	H200/200/20	235	1784	1784	M 30	4,6	12	0,76	-981,56	0,48	769,91	0,37	0,00	n.v.t.	
M20	Vak 5	Horizontale Knikverkorters L50x50x5	H50/50/5	235	1250	1250	M 16	4,6	1	0,58	-16,33	0,59	16,33	0,35	1,50	0,65	
M21	Vak 5	Verticale Knikverkorters L50x50x5	H50/50/5	235	1720	1720	M 16	4,6	1	1,05	-29,39	1,52	29,39	0,64	0,00	n.v.t.	Staven uitwisselen in L55x55x6, met staalkwal. S355, en bouten uitwisselen in kwal. 8.8, zie berekening sheet V21
M21a	Vak 5	Verticale verbanden L150x100x12	H150/100/12	235	4360	2180	M 24	4,6	5	0,82	-262,06	0,71	279,54	0,66	0,00	n.v.t.	
M22	Vak 6	Randen L200x200x16	H200/200/16	235	1784	1784	M 30	4,6	12	0,73	-939,90	0,46	764,96	0,37	0,00	n.v.t.	
M23	Vak 6	Verticale verbanden L150x100x12	H150/100/12	235	4765	2382	M 24	4,6	5	0,58	-195,42	0,59	194,50	0,46	0,00	n.v.t.	
M24	Vak 6	Horizontale Knikverkorters L50x50x5	H50/50/5	235	1250	1250	M 16	4,6	1	0,42	-9,75	0,35	11,67	0,25	1,50	0,65	
M25	Vak 6	Horizontale vrband L130x130x12	H130/130/12	235	3950	3950	M 24	4,6	2	0,84	-114,52	0,48	74,60	0,14	1,50	0,12	
M26	Vak 6	Vertical Knikverkorters L90x90x9	H90/90/9	235	2076	2076	M 24	4,6	2	0,78	-106,31	0,64	66,20	0,34	0,00	n.v.t.	
M27	Vak 6	Vertical Knikverkorters L50x50x5	H50/50/5	235	2571	2571	M 24	4,6	2	0,10	-14,20	0,80	10,49	0,20	0,00	n.v.t.	
M28	Vak 6	Verticale verbanden L180x180x16	H180/180/16	235	5642	2825	M 30	4,6	5	0,60	-322,86	0,46	301,42	0,39	0,00	n.v.t.	
M29	Vak 7-8-9-10-13-14	Randen L200x200x16	H200/200/16	235	4261	2141	M 30	4,6	6	0,98	-633,51	0,37	385,56	0,18	0,00	n.v.t.	
M30	Vak 7-8-9-10-13-14	Horizontale Knikverkorters L50x50x5	H50/50/5	235	880	880	M 16	4,6	1	0,36	-10,02	0,27	10,02	0,22	1,50	0,46	
M31	Vak 7-8-9-10-13-14	Verticale Knikverkorters L50x50x5	H50/50/5	235	2050	2050	M 16	4,6	1	0,59	-17,33	1,16	16,47	0,36	0,00	n.v.t.	Staven uitwisselen in L55x55x6, met staalkwal. S355, en bouten uitwisselen in kwal. 8.8, zie berekening sheet V31
M32	Vak 7-8-9-10-13-14	Verticale verbanden L150x100x12	H150/100/12	235	4017	2019	M 30	4,6	4	0,68	-249,08	0,62	292,52	0,79	0,00	n.v.t.	
M33	Vak 7-8-9-10-13-14	Verticale verbanden L200x100x14	H200/100/14	235	4747	2380	M 24	4,6	5	0,84	-283,32	0,62	272,81	0,45	0,00	n.v.t.	
M34	Vak 7-8-9-10-13-14	Verticale verbanden L130x130x12	H130/130/12	235	4236	2206	M 30	4,6	3	0,88	-197,64	0,55	284,93	0,73	0,00	n.v.t.	
M35	Vak 7-8-9-10-13-14	Verticale verbanden L90x90x9	H90/90/9	235	4621	2366	M 20	4,6	2	0,81	-70,81	0,74	76,54	0,33	0,00	n.v.t.	
M36	Vak 7-8-9-10-13-14	Boven randen L160x160x15	H160/160/15	235	3680	3680	M 30	4,6	4	0,98	-214,88	0,43	346,36	0,59	0,00	n.v.t.	
M37	Vak 7-8-9-10-13-14	Horizontale verbanden L60x60x6	H60/60/6	235	3232	1616	M 16	4,6	1	0,82	-24,72	1,00	24,72	0,34	0,00	n.v.t.	
M38	Vak 7-8-9-10-13-14	Horizontale verbanden L100x10x10	H100/100/10	235	3507	3507	M 30	4,6	2	0,68	-110,32	0,88	145,43	0,75	0,00	n.v.t.	
M39	Vak 7-8-9-10-13-14	Horizontale en verticale Knikverkorters L50x50x5	H50/50/5	235	3227	3227	M 16	4,6	1	0,12	-3,40	0,48	3,40	0,07	0,00	n.v.t.	
M40	Vak 7-8-9-10-13-14	Verticale Knikverkorters L65x50x5	H65/50/5	235	1503	1503	M 20	4,6	1	0,16	-4,34	0,13	6,15	0,15	0,00	n.v.t.	
M41	Vak 7-8-9-10-13-14	Schuine verbanden L130x130x12	H130/130/12	235	2376	2376	M 24	4,6	4	0,69	-187,24	0,45	185,01	0,44	0,00	n.v.t.	
M42	Vak 7-8-9-10-13-14	Horizontale kruizen L90x90x9	H90/90/9	235	2540	2540	M 30	4,6	1	0,79	-47,70	0,61	47,51	0,50	0,00	n.v.t.	

M43	Vak 10-11-12-15-t_m 21	Randen L140x140x13	H140/140/13	235	4356	2220	M	24	4,6	8	**0,78**	-422,37	**0,25**	317,23	**0,15**	0,00	**n.v.t.**	
M44	Vak 10-11-12-15-t_m 21	Horizontale Knikverkorters L50x50x5	H50/50/5	235	2536	1268	M	16	4,6	1	**0,08**	-2,21	**0,11**	2,21	**0,05**	0,00	**n.v.t.**	
M45	Vak 10-11-12-15-t_m 21	Verticale Knikverkorters L50x50x5	H50/50/5	235	2179	2179	M	16	4,6	1	**0,13**	-3,37	**0,25**	3,56	**0,08**	0,00	**n.v.t.**	
M46	Vak 10-11-12-15-t_m 21	Verticale verbanden L150x100x10	H150/100/10	235	4099	2089	M	24	4,6	2	**0,88**	-119,40	**0,36**	93,04	**0,29**	0,00	**n.v.t.**	
M47	Vak 10-11-12-15-t_m 21	Verticale verbanden L110x110x10	H110/110/10	235	5030	2651	M	20	4,6	3	**0,91**	-128,02	**0,83**	118,97	**0,35**	0,00	**n.v.t.**	
M48	Vak 10-11-12-15-t_m 21	Boven randen L120x120x11	H120/120/11	235	4465	4465	M	24	4,6	3	**0,75**	-102,18	**0,67**	152,02	**0,41**	0,00	**n.v.t.**	
M49	Vak 10-11-12-15-t_m 21	Boven randen L60x60x6	H60/60/6	235	1213	1213	M	20	4,6	3	**0,46**	0,00	**0,00**	60,86	**0,68**	0,00	**n.v.t.**	
M50	Vak 10-11-12-15-t_m 21	Horiz.-vert. en schuine Knikverkort. L50x50x5	H50/50/5	235	1993	1993	M	16	4,6	1	**0,46**	-13,75	**0,89**	11,11	**0,24**	1,50	**0,66**	
M51	Vak 10-11-12-15-t_m 21	Schuine verbanden L90x90x9	H90/90/9	235	1506	1506	M	24	4,6	3	**0,48**	-86,31	**0,37**	97,66	**0,42**	0,00	**n.v.t.**	
M52	Vak 10-11-12-15-t_m 21	Schuine verbanden L100x100x10	H100/100/10	235	2819	2819	M	24	4,6	3	**0,41**	-82,64	**0,50**	50,97	**0,18**	0,00	**n.v.t.**	
M53	Vak 10-11-12-15-t_m 21	Schuine verbanden L75x75x8	H75/75/8	235	2819	2819	M	24	4,6	2	**0,58**	-24,28	**0,36**	78,90	**0,52**	0,00	**n.v.t.**	
M54	Vak 10-11-12-15-t_m 21	Horizontale kruizen L60x60x6	H60/60/6	235	3100	1652	M	16	4,6	2	**0,67**	-40,40	**0,96**	39,76	**0,47**	0,00	**n.v.t.**	
M55	HorVerb1	Staven L150x150x14	H150/150/14	235	3800	3800	M	24	4,6	4	**0,84**	-227,23	**0,58**	185,17	**0,30**	1,50	**0,08**	
M56	HorVerb1	Staven L70x70x7	H70/70/7	235	5374	5374	M	20	4,6	2	**0,11**	-10,60	**0,58**	8,57	**0,08**	1,50	**1,02**	**Staven uitwisselen in L150x150x10, met staalkwal. S355, en bouten uitwisselen in kwal. 8.8, zie berekening sheet V56**
M57	HorVerb1	Staven L75x75x8	H75/75/8	235	3800	3800	M	16	4,6	1	**0,06**	-1,81	**0,07**	1,81	**0,01**	1,50	**1,11**	**Staven uitwisselen in L75x75x8, met staalkwal. S355, en bouten uitwisselen in kwal. 8.8, zie berekening sheet V57**
M58	HorVerb2	Staven L65x65x7	H65/65/7	235	3353	3353	M	16	4,6	1	**0,00**	0,00	**0,00**	0,00	**0,00**	1,50	**0,74**	
M59	HorVerb2	Staven L70x70x7	H70/70/7	235	4741	4741	M	20	4,6	2	**0,19**	-18,02	**0,80**	17,77	**0,16**	1,50	**0,90**	
M60	HorVerb2	Staven L60x60x6	H60/60/6	235	3353	3353	M	24	4,6	4	**0,00**	-0,27	**0,01**	0,08	**0,00**	1,50	**2,03**	**Staven uitwisselen in L75x75x8, met staalkwal. S355, en bouten uitwisselen in kwal. 8.8, zie berekening sheet V60**
M61	HorVerb3	Staven L150x150x14	H150/150/14	235	2500	2500	M	30	4,6	4	**0,83**	-355,69	**0,58**	292,00	**0,50**	1,50	**0,05**	
M62	HorVerb3	Staven L90x90x9	H90/90/9	235	3536	3536	M	20	4,6	1	**1,08**	-50,62	**0,99**	49,64	**0,40**	1,50	**0,31**	**Bouten uitwisselen in kwaliteit 8.8, zie berekening sheet V62**
M63	HorVerb3	Staven L75x75x8	H75/75/8	235	5000	5000	M	16	4,6	1	**0,02**	-0,09	**0,01**	0,59	**0,00**	1,50	**0,73**	
M64	CrossArm 1-2	Bovern Randen	H100/100/10	235	4732	4732	M	24	4,6	3	**0,42**	0,00	**0,00**	85,65	**0,30**	0,00	**n.v.t.**	
M65	CrossArm 1-2	Horiz.-vert. en schuine Knikverkort. L50x50x5	H50/50/5	235	1888	1888	M	16	4,6	1	**0,45**	-13,56	**0,82**	2,05	**0,04**	0,00	**n.v.t.**	
M66	CrossArm 1-2	Horizontale kruizen L65x65x7	H65/65/7	235	2073	1600	M	20	4,6	2	**0,51**	-45,09	**0,52**	37,23	**0,37**	0,00	**n.v.t.**	
M67	CrossArm 1-2	Horizontale kruizen L55x55x6	H55/55/6	235	2713	1600	M	16	4,6	2	**0,36**	-18,04	**0,45**	21,49	**0,29**	0,00	**n.v.t.**	
M68	CrossArm 1-2	Horizontale kruizen L80x80x8	H80/80/8	235	4190	2445	M	16	4,6	2	**0,97**	-58,73	**0,80**	36,86	**0,24**	0,00	**n.v.t.**	
M69	CrossArm 1-2	Schuine verbanden L60x60x6	H80/80/8	235	4190	2445	M	16	4,6	2	**1,09**	0,00	**0,00**	65,96	**0,42**	0,00	**n.v.t.**	**Bouten uitwisselen in kwaliteit 8.8, zie berekening sheet V69**
M70	CrossArm 3-4	Boven renden L80x80x8	H80/80/8	235	2880	2880	M	20	4,6	3	**0,43**	0,00	**0,00**	61,01	**0,36**	0,00	**n.v.t.**	
M71	CrossArm 3-4	Horizontale kruizen L60x60x6	H65/65/7	235	2347	2347	M	16	4,6	2	**0,65**	-39,39	**0,73**	32,96	**0,31**	0,00	**n.v.t.**	
M72	CrossArm 5-6	Randen L80x80x8	H80/80/8	235	3350	2008	M	20	4,6	2	**1,23**	-115,31	**1,13**	81,75	**0,54**	0,00	**n.v.t.**	**Knikverkorters aanbrengen L50x50x5, en bouten uitwisselen in kwaliteit 8.8, zie berekening sheet V72**
M73	CrossArm 5-6	Schuine randen L100x75x7	H100/75/7	235	6950	1726	M	20	4,6	2	**0,63**	-42,19	**0,82**	59,45	**0,41**	0,00	**n.v.t.**	
M74	CrossArm 5-6	Horizontale en schuine knikverkorters L50x50x5	H50/50/5	235	1910	1910	M	16	4,6	1	**0,10**	-2,90	**0,18**	2,90	**0,06**	1,50	**0,51**	
M75	CrossArm 5-6	Verticale verbanden1 L50x50x5	H50/50/5	235	2162	2162	M	16	4,6	1	**0,49**	-13,65	**1,00**	13,63	**0,30**	0,00	**n.v.t.**	
M76	CrossArm 5-6	Verticale verbanden2 L50x50x5	H50/50/5	235	2184	1155	M	16	4,6	1	**0,70**	-20,99	**0,95**	19,63	**0,43**	0,00	**n.v.t.**	
	Vak 9-13-14 + CrossArm1-2	Ondre randen UNP200	UNP200	Zie uitvoer computerberekening SCIA							**0,66**							
		Dwars liggers HEB200	HEB200	Zie uitvoer computerberekening SCIA							**0,11**							
	Vak 15 t_m 21 + CrossArm3-4	Ondre randen UNP180	UNP180	Zie uitvoer computerberekening SCIA							**0,43**							
		Dwars liggers HEB180	HEB180	Zie uitvoer computerberekening SCIA							**0,05**							
V06	Vak 1	Horizontale en Verticale Knikverkorters L70x70x7	H70/70/7	355	3322	3322	M	16	8,8	1	**0,39**	-23,73	**0,96**	23,73	**0,20**	1,50	**0,42**	
V09	Vak 2	Schuine Knikverkorters L70x70x7	H70/70/7	355	2620	2620	M	16	8,8	1	**0,61**	-28,83	**0,80**	28,83	**0,32**	0,00	**n.v.t.**	
V21	Vak 5	Verticale Knikverkorters L55x55x6	H55/55/6	355	1720	1720	M	16	8,8	1	**0,62**	-29,39	**0,93**	29,39	**0,38**	0,00	**n.v.t.**	
V31	Vak 8-9-10-13-14	Verticale Knikverkorters L55x55x6	H55/55/6	355	2050	2050	M	16	8,8	1	**0,41**	-17,33	**0,72**	16,47	**0,21**	0,00	**n.v.t.**	
V56	HorVerb1	Staven L150x150x10	H150/150/10	355	5374	5374	M	20	8,8	2	**0,06**	-10,50	**0,09**	8,48	**0,02**	1,50	**0,16**	
V57	HorVerb1	Staven L75x75x8	H75/75/8	355	3800	3800	M	16	8,8	1	**0,03**	-1,81	**0,07**	1,81	**0,01**	1,50	**0,73**	
V60	HorVerb2	Staven L75x75x8	H75/75/8	355	3353	3353	M	24	8,8	4	**0,00**	-0,27	**0,00**	0,08	**0,00**	1,50	**0,65**	
V62	HorVerb3	Staven L90x90x9	H90/90/9	235	3536	3536	M	20	8,8	1	**0,72**	-50,62	**0,99**	49,64	**0,40**	1,50	**0,31**	
V69	CrossArm 1-2	Schuine verbanden L60x60x6	H80/80/8	235	4190	2445	M	16	8,8	2	**0,74**	0,00	**0,00**	65,96	**0,42**	0,00	**n.v.t.**	
V72	CrossArm 5-6	Randen L80x80x8	H80/80/8	235	2008	2008	M	20	8,8	2	**0,99**	-115,31	**0,96**	81,75	**0,54**	0,00	**n.v.t.**	

5.2 Overzicht Verzwaring

5.2.1 Overzicht van de Mast

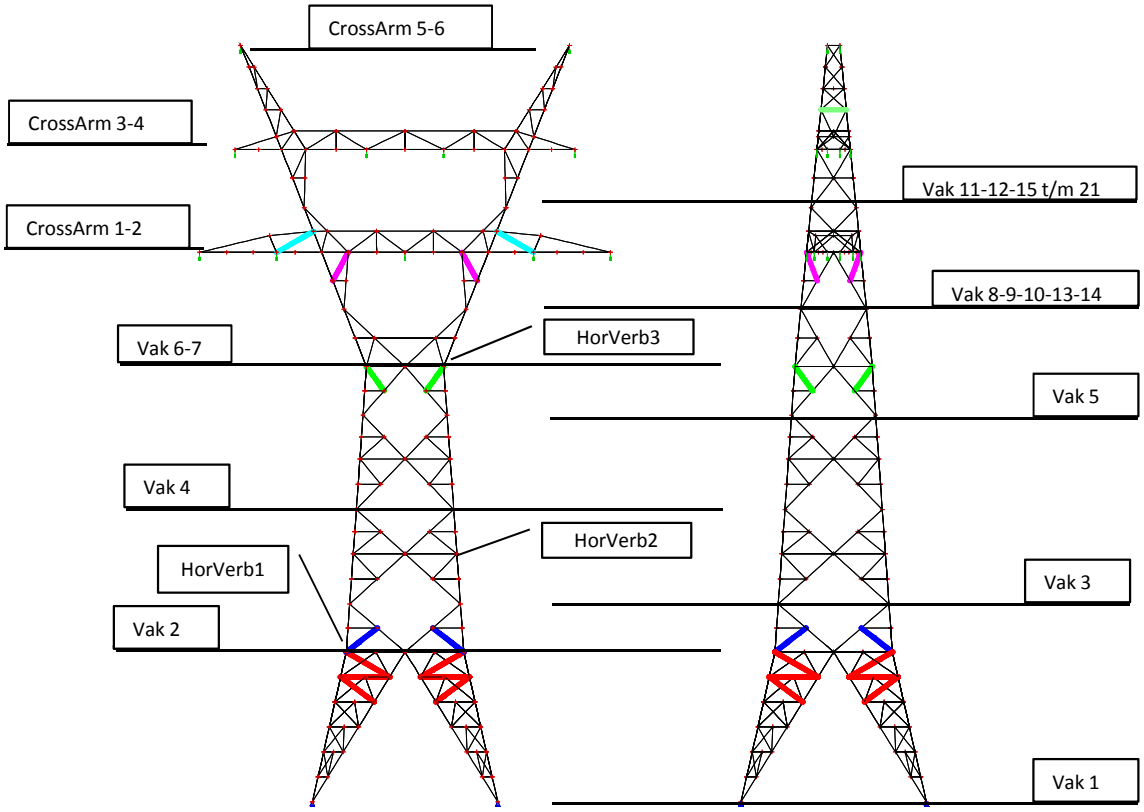

Voor / Achter **Zwart / Wit**

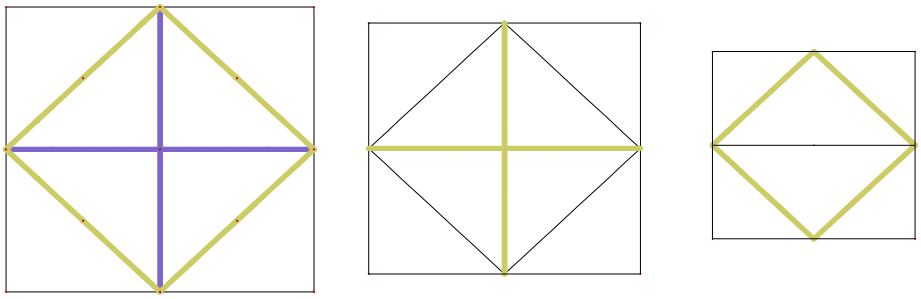

Bovenaanzicht Horizontale windverbanden

HorVerb1 **HorVerb2** **HorVerb3**

5.2.2 Uit te wisselen onderdelen van de mast

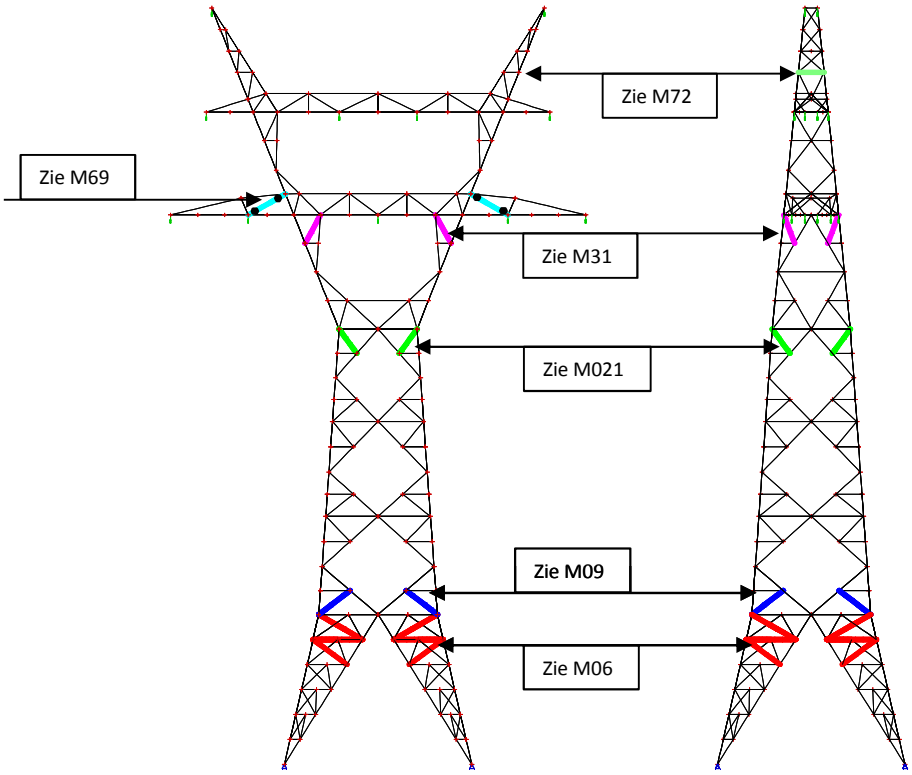

Voor / Achter **Zwart / Wit**

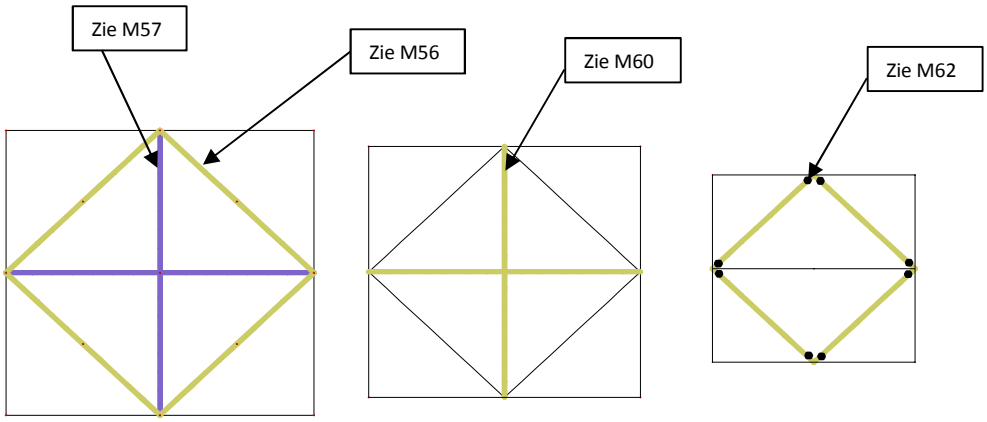

Bovenaanzicht Horizontale windverbanden

HorVerb1 **HorVerb2** **HorVerb3**

Bijlage A Geleiderbelastingen

Dossier/File

Order

Pagina/Page

D&C ENGINEERING
design and construct

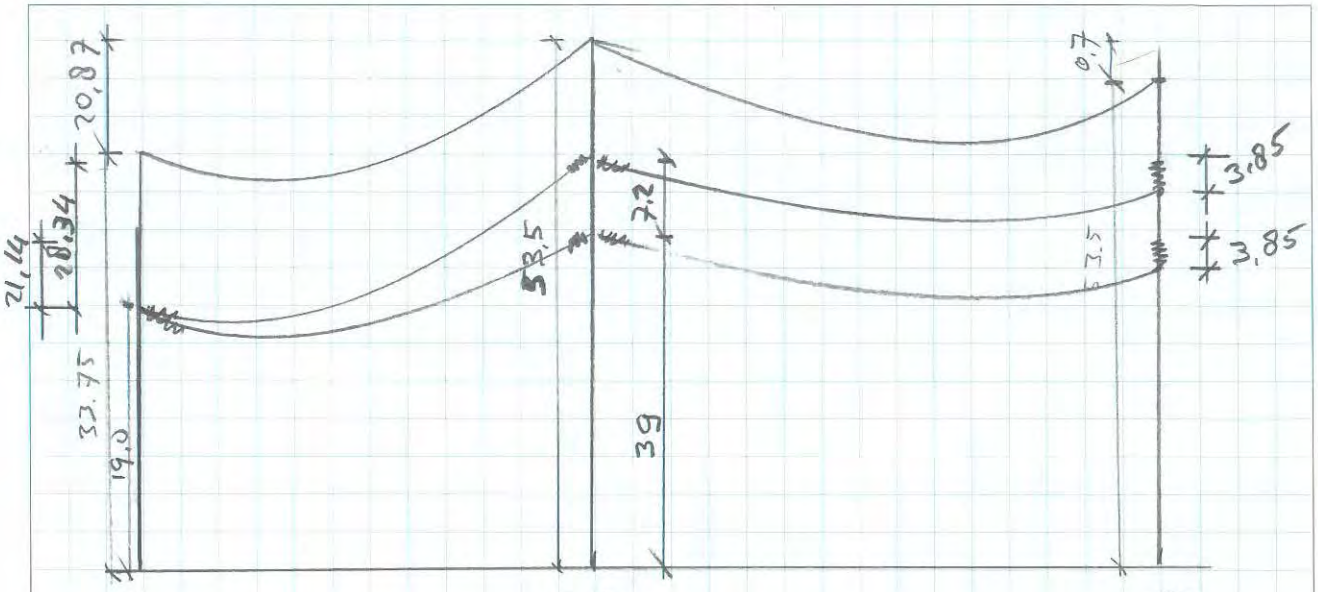

(port.) 319 (M55) 421 (M56)

-4,217 -3,08 -3,82

fase draden

CU185 eds = 24 %

bliksem draden

Br 50 eds = 36,6 %

Revisie/Revision	0	A	B	C	D	E	F
Datum/Date							
Naam/Name							
Gecontroleerd/Checked							
Goedgekeurd/Approved							

KARAKTERISTIEKE GEGEVENS :

Naam hoogspanningslijn : 150 kV Zoetermeer - Leiden

Masttype : hoekmast

Mastnaam : mast 55

Mastnummer : 55

Windgebied : II

Bebouwing : Onbebouwd

IJsgebied : B

Referentie periode : 50 jaar

		VELD 1	VELD 2
Minimum lijnhoek	[graden]	179.38	174.7
Maximum lijnhoek	[graden]	179.38	179.38
Veldlengte	[m]	319	421
Vaklengte	[m]	740	

* Belastingcombinaties en -factoren: NEN-EN 50341 -1 t/m -3, nov. 2001

* Berekend worden de "Ultimate Limit State" belastingcombinaties, (table 4.2.11/NL.1)

(1a) Permanente belasting met extreme windbelasting
(1b) Permanente belasting met extreme koude
(3) Permanente belasting met extreme ijsbelasting
(4) Permanente belasting met onderhoudsbelasting
(5a) Permanente belasting met torsie
(6) Permanente belasting

* Berekend worden de "Special Limit State" belastingcombinaties, (table 4.2.11/NL.3)

(1a) Permanente belasting met extreme windbelasting
(1b) Permanente belasting met extreme koude
(3) Permanente belasting met extreme ijsbelasting
(4) Permanente belasting met onderhoudsbelasting

* Alle belastingscomponenten zijn exclusief belastingsfactoren, uitgezonderd draadtrekkrachten jTrep

* Assenstelsel:

y = lijnrichting

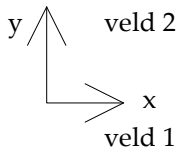

INVOERGEGEVENS VOOR DRAAD No.: 1

Geleidersoort	:	fasedraad
Geleidersoort + plaats	:	fasedr boven
Geleiders veld 1 en 2	:	CU185
Eigen gewicht draad	[N/m] :	16.62
Draaddoorsnede	[mm²] :	181.6
Draaddiameter	[mm] :	17.5
Elasticiteitsmodulus	[N/mm²] :	130000
Uitzettingscoëfficiënt	[1/°C] :	.000017
Breekbelasting draad	[N] :	72760.5
Maximum percentage breekbelasting	[%] :	100
EDS percentage breekbelasting	[%] :	24
Hoogte draadbevestiging	[m] :	46.2

Eigen gewicht isolator	[kN] :	2.5	2.5
Lengte isolator	[m] :	2	2
Diameter isolatorschaal	[mm] :	170	170
Hoogte isolator boven maaiveld	[m] :	46.20	46.20
Hoogte verschil draadbevestiging (aangrenzende minus beschouwende mast) (hoger = positief)	[m] :	-28.34	-3.85

INVOERGEGEVENS VOOR DRAAD No.: 2

Geleidersoort	:	fasedraad
Geleidersoort + plaats	:	fasedr onder
Geleiders veld 1 en 2	:	CU185
Eigen gewicht draad	[N/m] :	16.62
Draaddoorsnede	[mm²] :	181.6
Draaddiameter	[mm] :	17.5
Elasticiteitsmodulus	[N/mm²] :	130000
Uitzettingscoëfficiënt	[1/°C] :	.000017
Breekbelasting draad	[N] :	72760.5
Maximum percentage breekbelasting	[%] :	100
EDS percentage breekbelasting	[%] :	24
Hoogte draadbevestiging	[m] :	39

Eigen gewicht isolator	[kN] :	2.5	2.5
Lengte isolator	[m] :	2	2
Diameter isolatorschaal	[mm] :	170	170
Hoogte isolator boven maaiveld	[m] :	39	39
Hoogte verschil draadbevestiging (aangrenzende minus beschouwende mast) (hoger = positief)	[m] :	1	-16.5

Mastnummer : 55
Draadnummer : 1
Geleidersoort + plaats : fasedr boven
Geleiders veld 1 en 2 : CU185
Veldlengte voor gewicht [m] : 472.95

BELASTING COMPONENTEN [kN]

		GELEIDER		ISOLATOR	
		VELD 1	VELD 2	VELD 1	VELD 2
Grep		- 4.24	- 3.68	- 2.50	- 2.50
Qijs;rep		- 1.92	- 1.67	0.00	0.00
Qonderhoud;rep		- 1.00	- 1.00		
BIJ MINIMUM LIJNHOEKEN-					
Qw;rep loodrecht lijn,	x	1.85	2.65	0.57	0.57
Qw;rep loodrecht lijn,	y	0.01	-0.12	-0.00	-0.00
Qw;rep in lijnrichting,	x	0.00	-0.01	0.00	0.00
Qw;rep in lijnrichting,	y	0.00	0.00	0.57	0.57
Qw;rep 45 graden (+y, +x),	x	0.93	1.21	0.40	0.40
Qw;rep 45 graden (+y, +x),	y	0.01	-0.06	0.40	0.40
Qw;rep 45 graden (-y, +x),	x	0.91	1.45	0.40	0.40
Qw;rep 45 graden (-y, +x),	y	0.00	-0.07	-0.40	-0.40
BIJ MAXIMUM LIJNHOEKEN-					
Qw;rep loodrecht lijn,	x	1.85	2.66	0.57	0.57
Qw;rep loodrecht lijn,	y	0.01	-0.01	-0.00	-0.00
Qw;rep in lijnrichting,	x	0.00	-0.00	0.00	0.00
Qw;rep in lijnrichting,	y	0.00	0.00	0.57	0.57
Qw;rep 45 graden (+y, +x),	x	0.93	1.32	0.40	0.40
Qw;rep 45 graden (+y, +x),	y	0.01	-0.01	0.40	0.40
Qw;rep 45 graden (-y, +x),	x	0.91	1.34	0.40	0.40
Qw;rep 45 graden (-y, +x),	y	0.00	-0.01	-0.40	-0.40
BIJ MINIMUM LIJNHOEKEN - BEIJSD					
Qw;rep loodrecht lijn,	x	4.73	6.78	0.57	0.57
Qw;rep loodrecht lijn,	y	0.03	-0.31	-0.00	-0.00
Qw;rep in lijnrichting,	x	0.00	-0.01	0.00	0.00
Qw;rep in lijnrichting,	y	0.00	0.00	0.57	0.57
Qw;rep 45 graden (+y, +x),	x	2.39	3.08	0.40	0.40
Qw;rep 45 graden (+y, +x),	y	0.01	-0.14	0.40	0.40
Qw;rep 45 graden (-y, +x),	x	2.34	3.71	0.40	0.40
Qw;rep 45 graden (-y, +x),	y	0.01	-0.17	-0.40	-0.40
BIJ MAXIMUM LIJNHOEKEN - BEIJSD					
Qw;rep loodrecht lijn,	x	4.73	6.80	0.57	0.57
Qw;rep loodrecht lijn,	y	0.03	-0.04	-0.00	-0.00
Qw;rep in lijnrichting,	x	0.00	-0.00	0.00	0.00
Qw;rep in lijnrichting,	y	0.00	0.00	0.57	0.57
Qw;rep 45 graden (+y, +x),	x	2.39	3.36	0.40	0.40
Qw;rep 45 graden (+y, +x),	y	0.01	-0.02	0.40	0.40
Qw;rep 45 graden (-y, +x),	x	2.34	3.44	0.40	0.40
Qw;rep 45 graden (-y, +x),	y	0.01	-0.02	-0.40	-0.40

Mastnummer : 55
Draadnummer : 1
Geleidersoort + plaats : fasedr boven
Geleiders veld 1 en 2 : CU185

DRAADTREKKRACHTEN - "Ultimate Limit State" (inclusief veiligheidsfactor, table 4.2.11/NL.1)

		VELD 1		VELD 2	
	Hoek t.o.v. lijnrichting	Min.lijnhoek	Max.lijnhoek	Min.lijnhoek	Max.lijnhoek
jTrep bij combinatie (1a)	90°	28.10	28.10	29.16	29.17
	0°	21.56	21.56	21.43	21.42
	45°	25.12	25.12	25.27	25.58
	-45°	25.05	25.05	25.98	25.67
jTrep bij combinatie (1b)	90°	23.26	23.26	22.58	22.58
	0°	22.94	22.94	22.20	22.20
	45°	23.10	23.10	22.37	22.39
	-45°	23.10	23.10	22.41	22.39
jTrep bij combinatie (3)	90°	36.13	36.13	36.60	36.61
	0°	33.48	33.48	33.37	33.37
	45°	34.85	34.85	34.88	35.01
	-45°	34.82	34.82	35.18	35.05
jTrep bij combinatie (4)	90°	26.00	26.00	26.91	26.91
	0°	25.64	25.64	26.49	26.49
	45°	25.82	25.82	26.68	26.70
	-45°	25.82	25.82	26.72	26.70
jTrep bij combinatie (5a)	90°	17.97		17.85	
jTrep bij combinatie (6)	90°	24.26		24.09	

DRAADTREKKRACHTEN - "Special Limit State" (inclusief veiligheidsfactor, table 4.2.11/NL.3)

		VELD 1		VELD 2	
	Hoek t.o.v. lijnrichting	Min.lijnhoek	Max.lijnhoek	Min.lijnhoek	Max.lijnhoek
jTrep bij combinatie (1a)	90°	23.25	23.25	23.58	23.59
	0°	21.56	21.56	21.42	21.41
	45°	22.44	22.44	22.43	22.52
	-45°	22.42	22.42	22.63	22.54
jTrep bij combinatie (1b)	90°	23.14	23.14	22.44	22.44
	0°	22.94	22.94	22.20	22.20
	45°	23.04	23.04	22.31	22.32
	-45°	23.04	23.04	22.33	22.32
jTrep bij combinatie (3)	90°	26.47	26.47	26.88	26.88
	0°	24.09	24.09	24.01	24.00
	45°	25.32	25.32	25.36	25.48
	-45°	25.30	25.30	25.62	25.51
jTrep bij combinatie (4)	90°	25.57	25.57	26.02	26.02
	0°	25.34	25.34	25.75	25.75
	45°	25.46	25.46	25.87	25.88
	-45°	25.46	25.46	25.90	25.88

Mastnummer : 55
Draadnummer : 2
Geleidersoort + plaats : fasedr onder
Geleiders veld 1 en 2 : CU185
Veldlengte voor gewicht [m] : 407.89

BELASTING COMPONENTEN [kN]

		GELEIDER		ISOLATOR	
		VELD 1	VELD 2	VELD 1	VELD 2
Grep		- 2.61	- 4.22	- 2.50	- 2.50
Qijs;rep		- 1.18	- 1.91	0.00	0.00
Qonderhoud;rep		- 1.00	- 1.00		
BIJ MINIMUM LIJNHOEKEN-					
Qw;rep loodrecht lijn,	x	2.03	2.17	0.55	0.55
Qw;rep loodrecht lijn,	y	0.01	-0.10	-0.00	-0.00
Qw;rep in lijnrichting,	x	0.00	-0.00	0.00	0.00
Qw;rep in lijnrichting,	y	0.00	0.00	0.55	0.55
Qw;rep 45 graden (+y, +x),	x	1.02	0.99	0.39	0.39
Qw;rep 45 graden (+y, +x),	y	0.01	-0.05	0.39	0.39
Qw;rep 45 graden (-y, +x),	x	1.00	1.19	0.39	0.39
Qw;rep 45 graden (-y, +x),	y	0.01	-0.05	-0.39	-0.39
BIJ MAXIMUM LIJNHOEKEN-					
Qw;rep loodrecht lijn,	x	2.03	2.17	0.55	0.55
Qw;rep loodrecht lijn,	y	0.01	-0.01	-0.00	-0.00
Qw;rep in lijnrichting,	x	0.00	-0.00	0.00	0.00
Qw;rep in lijnrichting,	y	0.00	0.00	0.55	0.55
Qw;rep 45 graden (+y, +x),	x	1.02	1.08	0.39	0.39
Qw;rep 45 graden (+y, +x),	y	0.01	-0.01	0.39	0.39
Qw;rep 45 graden (-y, +x),	x	1.00	1.10	0.39	0.39
Qw;rep 45 graden (-y, +x),	y	0.01	-0.01	-0.39	-0.39
BIJ MINIMUM LIJNHOEKEN - BEIJSD					
Qw;rep loodrecht lijn,	x	5.19	5.54	0.55	0.55
Qw;rep loodrecht lijn,	y	0.03	-0.26	-0.00	-0.00
Qw;rep in lijnrichting,	x	0.00	-0.01	0.00	0.00
Qw;rep in lijnrichting,	y	0.00	0.00	0.55	0.55
Qw;rep 45 graden (+y, +x),	x	2.62	2.52	0.39	0.39
Qw;rep 45 graden (+y, +x),	y	0.01	-0.12	0.39	0.39
Qw;rep 45 graden (-y, +x),	x	2.57	3.03	0.39	0.39
Qw;rep 45 graden (-y, +x),	y	0.01	-0.14	-0.39	-0.39
BIJ MAXIMUM LIJNHOEKEN - BEIJSD					
Qw;rep loodrecht lijn,	x	5.19	5.56	0.55	0.55
Qw;rep loodrecht lijn,	y	0.03	-0.03	-0.00	-0.00
Qw;rep in lijnrichting,	x	0.00	-0.00	0.00	0.00
Qw;rep in lijnrichting,	y	0.00	0.00	0.55	0.55
Qw;rep 45 graden (+y, +x),	x	2.62	2.75	0.39	0.39
Qw;rep 45 graden (+y, +x),	y	0.01	-0.01	0.39	0.39
Qw;rep 45 graden (-y, +x),	x	2.57	2.81	0.39	0.39
Qw;rep 45 graden (-y, +x),	y	0.01	-0.02	-0.39	-0.39

Mastnummer : 55
Draadnummer : 2
Geleidersoort + plaats : fasedr onder
Geleiders veld 1 en 2 : CU185

DRAADTREKKRACHTEN - "Ultimate Limit State" (inclusief veiligheidsfactor, table 4.2.11/NL.1)

		VELD 1		VELD 2	
	Hoek t.o.v. lijnrichting	Min.lijnhoek	Max.lijnhoek	Min.lijnhoek	Max.lijnhoek
jTrep bij combinatie (1a)	90°	28.72	28.72	27.05	27.06
	0°	21.21	21.21	21.57	21.56
	45°	25.35	25.35	24.23	24.45
	-45°	25.27	25.27	24.73	24.51
jTrep bij combinatie (1b)	90°	22.96	22.96	22.60	22.60
	0°	22.58	22.58	22.34	22.34
	45°	22.77	22.77	22.46	22.47
	-45°	22.77	22.77	22.48	22.47
jTrep bij combinatie (3)	90°	36.03	36.03	35.80	35.81
	0°	32.92	32.92	33.59	33.59
	45°	34.54	34.54	34.62	34.71
	-45°	34.51	34.51	34.82	34.73
jTrep bij combinatie (4)	90°	28.38	28.38	26.21	26.21
	0°	27.97	27.97	25.93	25.92
	45°	28.18	28.18	26.05	26.06
	-45°	28.18	28.18	26.08	26.07
jTrep bij combinatie (5a)	90°	17.67		17.96	
jTrep bij combinatie (6)	90°	23.86		24.25	

DRAADTREKKRACHTEN - "Special Limit State" (inclusief veiligheidsfactor, table 4.2.11/NL.3)

		VELD 1		VELD 2	
	Hoek t.o.v. lijnrichting	Min.lijnhoek	Max.lijnhoek	Min.lijnhoek	Max.lijnhoek
jTrep bij combinatie (1a)	90°	23.18	23.18	23.04	23.05
	0°	21.21	21.21	21.56	21.56
	45°	22.23	22.23	22.25	22.31
	-45°	22.21	22.21	22.38	22.32
jTrep bij combinatie (1b)	90°	22.81	22.81	22.50	22.50
	0°	22.58	22.58	22.34	22.34
	45°	22.70	22.70	22.41	22.42
	-45°	22.69	22.69	22.43	22.42
jTrep bij combinatie (3)	90°	26.47	26.47	26.14	26.14
	0°	23.69	23.69	24.17	24.16
	45°	25.14	25.14	25.08	25.17
	-45°	25.11	25.11	25.27	25.19
jTrep bij combinatie (4)	90°	27.13	27.13	25.55	25.55
	0°	26.87	26.87	25.37	25.37
	45°	27.00	27.00	25.45	25.46
	-45°	27.00	27.00	25.47	25.46

KARAKTERISTIEKE GEGEVENS :

Naam hoogspanningslijn : 150 kV Zoetermeer - Leiden

Masttype : hoekmast

Mastnaam : mast 55

Mastnummer : 55

Windgebied : II

Bebouwing : Onbebouwd

IJsgebied : A

Referentie periode : 50 jaar

		VELD 1	VELD 2
Minimum lijnhoek	[graden]	179.38	179.38
Maximum lijnhoek	[graden]	179.38	174.7
Veldlengte	[m]	319	421
Vaklengte	[m]	740	

* Belastingcombinaties en -factoren: NEN-EN 50341 -1 t/m -3, nov. 2001

* Berekend worden de "Ultimate Limit State" belastingcombinaties, (table 4.2.11/NL.1)

(1a) Permanente belasting met extreme windbelasting
(1b) Permanente belasting met extreme koude
(3) Permanente belasting met extreme ijsbelasting
(4) Permanente belasting met onderhoudsbelasting
(5a) Permanente belasting met torsie
(6) Permanente belasting

* Berekend worden de "Special Limit State" belastingcombinaties, (table 4.2.11/NL.3)

(1a) Permanente belasting met extreme windbelasting
(1b) Permanente belasting met extreme koude
(3) Permanente belasting met extreme ijsbelasting
(4) Permanente belasting met onderhoudsbelasting

* Alle belastingscomponenten zijn exclusief belastingsfactoren, uitgezonderd draadtrekkrachten jTrep

* Assenstelsel:

y = lijnrichting

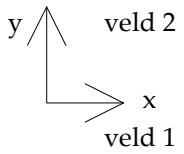

INVOERGEGEVENS VOOR DRAAD No.: 1

Geleidersoort	:	bliksemdraad
Geleidersoort + plaats	:	bliksemdr
Geleiders veld 1 en 2	:	Br 50
Eigen gewicht draad	[N/m] :	4.43
Draaddoorsnede	[mm²] :	48.36
Draaddiameter	[mm] :	9
Elasticiteitsmodulus	[N/mm²] :	130000
Uitzettingscoëfficiënt	[1/°C] :	0.000017
Breekbelasting draad	[N] :	28390.7
Maximum percentage breekbelasting	[%] :	100
EDS percentage breekbelasting	[%] :	36.6
Hoogte draadbevestiging	[m] :	53.5

Eigen gewicht isolator	[kN] :	0	0
Lengte isolator	[m] :	0	0
Diameter isolatorschaal	[mm] :	0	0
Hoogte isolator boven maaiveld	[m] :	0	0
Hoogte verschil draadbevestiging (aangrenzende minus beschouwende mast) (hoger = positief)	[m] :	-20.87	-.7

Mastnummer : 55
Draadnummer : 1
Geleidersoort + plaats : bliksemdr
Geleiders veld 1 en 2 : Br 50
Veldlengte voor gewicht [m] : 526.35

BELASTING COMPONENTEN [kN]		GELEIDER		ISOLATOR	
		VELD 1	VELD 2	VELD 1	VELD 2
Grep		- 1.39	- 0.95	0.00	0.00
Qijs;rep		- 4.71	- 3.21	0.00	0.00
Qonderhoud;rep		0.00	0.00		
BIJ MINIMUM LIJNHOEKEN-					
Qw;rep loodrecht lijn,	x	1.23	1.68	0.00	0.00
Qw;rep loodrecht lijn,	y	0.01	-0.01	0.00	0.00
Qw;rep in lijnrichting,	x	0.00	-0.00	0.00	0.00
Qw;rep in lijnrichting,	y	0.00	0.00	0.00	0.00
Qw;rep 45 graden (+y, +x),	x	0.62	0.83	0.00	0.00
Qw;rep 45 graden (+y, +x),	y	0.00	-0.00	0.00	0.00
Qw;rep 45 graden (-y, +x),	x	0.61	0.85	0.00	0.00
Qw;rep 45 graden (-y, +x),	y	0.00	-0.00	0.00	0.00
BIJ MAXIMUM LIJNHOEKEN-					
Qw;rep loodrecht lijn,	x	1.23	1.67	0.00	0.00
Qw;rep loodrecht lijn,	y	0.01	-0.08	0.00	0.00
Qw;rep in lijnrichting,	x	0.00	-0.00	0.00	0.00
Qw;rep in lijnrichting,	y	0.00	0.00	0.00	0.00
Qw;rep 45 graden (+y, +x),	x	0.62	0.76	0.00	0.00
Qw;rep 45 graden (+y, +x),	y	0.00	-0.04	0.00	0.00
Qw;rep 45 graden (-y, +x),	x	0.61	0.91	0.00	0.00
Qw;rep 45 graden (-y, +x),	y	0.00	-0.04	0.00	0.00
BIJ MINIMUM LIJNHOEKEN - BEIJSD					
Qw;rep loodrecht lijn,	x	7.07	9.75	0.00	0.00
Qw;rep loodrecht lijn,	y	0.04	-0.05	0.00	0.00
Qw;rep in lijnrichting,	x	0.00	-0.00	0.00	0.00
Qw;rep in lijnrichting,	y	0.00	0.00	0.00	0.00
Qw;rep 45 graden (+y, +x),	x	3.57	4.82	0.00	0.00
Qw;rep 45 graden (+y, +x),	y	0.02	-0.03	0.00	0.00
Qw;rep 45 graden (-y, +x),	x	3.50	4.93	0.00	0.00
Qw;rep 45 graden (-y, +x),	y	0.02	-0.03	0.00	0.00
BIJ MAXIMUM LIJNHOEKEN - BEIJSD					
Qw;rep loodrecht lijn,	x	7.07	9.72	0.00	0.00
Qw;rep loodrecht lijn,	y	0.04	-0.45	0.00	0.00
Qw;rep in lijnrichting,	x	0.00	-0.02	0.00	0.00
Qw;rep in lijnrichting,	y	0.00	0.00	0.00	0.00
Qw;rep 45 graden (+y, +x),	x	3.57	4.42	0.00	0.00
Qw;rep 45 graden (+y, +x),	y	0.02	-0.20	0.00	0.00
Qw;rep 45 graden (-y, +x),	x	3.50	5.32	0.00	0.00
Qw;rep 45 graden (-y, +x),	y	0.02	-0.25	0.00	0.00

Mastnummer : 55
Draadnummer : 1
Geleidersoort + plaats : bliksemdr
Geleiders veld 1 en 2 : Br 50

DRAADTREKKRACHTEN - "Ultimate Limit State" (inclusief veiligheidsfactor, table 4.2.11/NL.1)

		VELD 1		VELD 2	
	Hoek t.o.v. lijnrichting	Min.lijnhoek	Max.lijnhoek	Min.lijnhoek	Max.lijnhoek
jTrep bij combinatie (1a)	90°	21.68	21.68	19.57	19.56
	0°	12.58	12.58	9.32	9.36
	45°	18.50	18.50	15.74	15.36
	-45°	18.42	18.42	15.84	16.21
jTrep bij combinatie (1b)	90°	15.57	15.57	10.98	10.98
	0°	14.80	14.80	10.17	10.17
	45°	15.21	15.21	10.58	10.55
	-45°	15.20	15.20	10.59	10.63
jTrep bij combinatie (3)	90°	40.32	40.32	41.31	41.30
	0°	35.37	35.37	35.03	35.04
	45°	38.05	38.05	38.37	38.11
	-45°	37.99	37.99	38.43	38.68
jTrep bij combinatie (4)	90°	13.69	13.69	10.23	10.23
	0°	12.75	12.75	9.45	9.45
	45°	13.24	13.24	9.84	9.81
	-45°	13.23	13.23	9.85	9.88
jTrep bij combinatie (5a)	90°	10.48		7.76	
jTrep bij combinatie (6)	90°	14.15		10.48	

DRAADTREKKRACHTEN - "Special Limit State" (inclusief veiligheidsfactor, table 4.2.11/NL.3)

		VELD 1		VELD 2	
	Hoek t.o.v. lijnrichting	Min.lijnhoek	Max.lijnhoek	Min.lijnhoek	Max.lijnhoek
jTrep bij combinatie (1a)	90°	13.68	13.68	12.24	12.23
	0°	12.58	12.58	9.32	9.32
	45°	12.90	12.90	10.90	10.78
	-45°	12.88	12.88	10.93	11.05
jTrep bij combinatie (1b)	90°	15.12	15.12	10.65	10.64
	0°	14.80	14.80	10.17	10.17
	45°	14.97	14.97	10.41	10.39
	-45°	14.96	14.96	10.41	10.43
jTrep bij combinatie (3)	90°	20.58	20.58	21.54	21.52
	0°	9.05	9.05	8.96	9.01
	45°	16.32	16.32	16.73	16.26
	-45°	16.21	16.21	16.86	17.31
jTrep bij combinatie (4)	90°	13.29	13.29	9.91	9.91
	0°	12.75	12.75	9.45	9.45
	45°	13.03	13.03	9.68	9.66
	-45°	13.02	13.02	9.69	9.71

Bijlage B Berekening Mast 55; Scia Engineer

Project	- 150 kV lijn Leiden - Zoetermeer
Onderdeel	- berekening Mast 55
Omschrijving	- ontwerpberekening
Auteur	- SMA
Datum	18.02.2014
Constructie	Algemeen XYZ
Nationale norm	EC - EN

1. Inhoudsopgave

1. Inhoudsopgave	2
2. Overzicht rekenmodel	3
3. Knoop	4
4. Knoopnummers	6
4.1. Knoopnummers steunpunten	6
5. 1D-staaf	7
6. Staafnummers mastlichaam	18
6.1. Vak 1	18
6.2. Vak 2+3	19
6.3. Vak 4+5	20
6.4. Vak 6	21
6.5. Vak 7+8+9+10+13+14	22
6.6. Vak 11+12+15 t/m 21	22
7. Staafnummers traverses	23
7.1. CrossArm1	23
7.2. CrossArm2	24
7.3. CrossArm3	25
7.4. CrossArm4	26
7.5. CrossArm5	27
7.6. CrossArm6	28
8. Staafnummers horizontale verbanden	28
8.1. Horizontaal verband 1	28
8.2. Horizontaal verband 2	29
8.3. Horizontaal verband 3	29
9. Belastingsgevallen	30
10. Combinaties	31
11. Resultaten	46
11.1. Interne krachten in staaf	46
11.2. Reacties	58
11.3. Resultante op Fundering	58
11.4. Controle UNP en HEB profilen	59
11.4.1. Staalcontrole; Algehele toetsing Vak 9+13+14+ CrossArm1+2	59
11.4.2. Staalcontrole; Algehele toetsing Vak 15 t/m 21 + CrossArm3+4	59

2. Overzicht rekenmodel

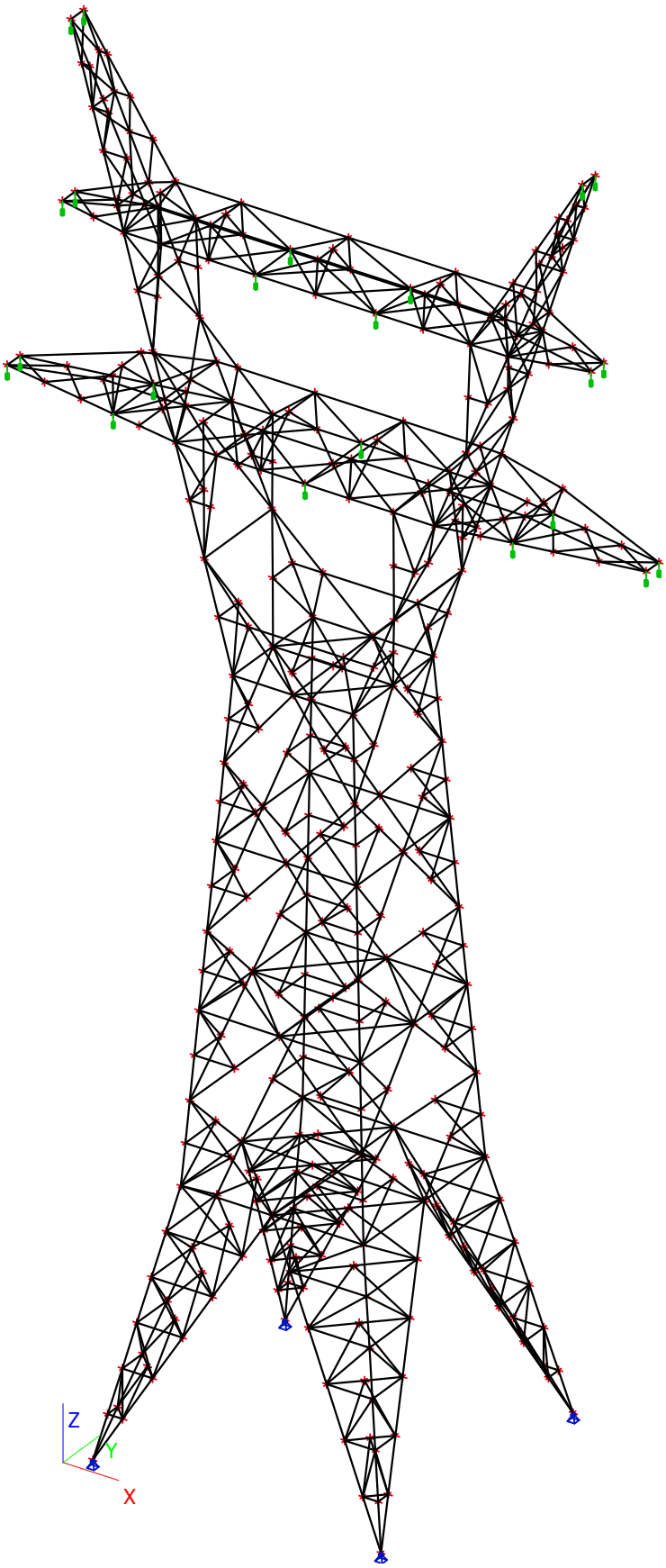

D&C ENGINEERING	Project	- 150 kV lijn Leiden - Zoetermeer
	Onderdeel	- berekening Mast 55
	Omschrijving	- ontwerpberekening
	Nationale norm	EC - EN
	Auteur	- SMA

3. Knoop

Naam	Coördinaat X [m]	Coördinaat Y [m]	Coördinaat Z [m]
K1	-8,904	-0,682	49,980
K2	-9,553	0,000	49,980
K3	-10,100	-0,541	51,489
K5	-9,553	0,682	49,980
K7	-10,100	0,541	51,489
K9	-9,553	-0,682	49,980
K13	-9,014	0,821	48,490
K15	-8,333	0,000	46,609
K17	-9,014	-0,821	48,490
K21	-9,764	0,543	51,470
K24	-8,905	0,682	49,980
K28	-8,045	0,821	48,490
K29	-8,333	0,996	46,609
K31	-9,764	-0,543	51,470
K38	-8,045	-0,821	48,490
K39	-8,333	-0,996	46,609
K43	-8,004	-1,081	45,700
K47	-7,279	0,000	43,700
K55	-7,279	-1,268	43,700
K56	-7,279	1,268	43,700
K61	-5,929	1,616	39,971
K63	-5,397	-1,753	38,500
K65	-5,929	-1,616	39,971
K67	-5,938	0,000	39,994
K69	-3,952	2,126	34,509
K70	-5,397	0,000	38,500
K71	-4,678	1,939	36,515
K72	-4,676	1,060	36,510
K75	-3,952	-2,126	34,509
K77	-4,678	-1,939	36,515
K78	-4,676	-1,060	36,510
K81	4,678	1,939	36,515
K82	3,814	1,939	36,514
K83	3,677	1,753	38,500
K86	-1,974	2,323	32,501
K87	1,974	2,323	32,501
K88	-1,974	-2,323	32,501
K89	1,974	-2,323	32,501
K90	-3,226	2,313	32,505
K91	-2,500	2,500	30,500
K93	0,000	2,500	30,500
K95	-3,226	1,063	32,505
K99	-2,500	0,000	30,500
K102	-2,500	-2,500	30,500
K103	-3,226	-1,063	32,505
K104	-3,226	-2,313	32,505
K109	0,000	-2,500	30,500
K111	3,226	2,313	32,505
K112	2,500	2,500	30,500
K115	8,904	0,682	49,980
K116	9,553	0,000	49,980
K117	8,904	-0,682	49,980
K118	10,100	-0,541	51,489
K120	9,553	0,682	49,980
K122	10,100	0,541	51,489
K124	9,553	-0,682	49,980
K128	9,014	0,821	48,490
K130	8,333	0,000	46,609
K132	9,014	-0,821	48,490
K136	9,764	0,543	51,470
K143	8,045	0,821	48,490
K144	8,333	0,996	46,609
K146	9,764	-0,543	51,470
K153	8,045	-0,821	48,490
K154	8,333	-0,997	46,609
K156	8,004	1,081	45,700
K158	8,004	-1,081	45,700

Naam	Coördinaat X [m]	Coördinaat Y [m]	Coördinaat Z [m]
K162	7,279	0,000	43,700
K170	7,279	-1,268	43,700
K171	7,279	1,268	43,700
K173	-7,185	0,001	47,000
K177	7,185	0,001	47,000
K186	-2,498	1,081	45,700
K191	-4,465	0,000	47,000
K194	-4,465	-1,081	45,700
K198	-6,435	-1,081	45,700
K201	-2,498	-1,081	45,700
K205	4,465	0,960	47,000
K206	6,435	1,081	45,700
K207	2,498	1,081	45,700
K211	4,465	1,081	45,700
K212	4,465	0,000	47,000
K215	4,465	-1,081	45,700
K217	4,465	-0,960	47,000
K219	6,435	-1,081	45,700
K222	2,498	-1,081	45,700
K224	0,000	1,081	45,700
K226	0,000	0,000	47,000
K227	0,000	-1,081	45,700
K233	-7,185	0,960	47,000
K235	-7,185	-0,960	47,000
K243	-6,480	1,268	43,700
K245	-6,480	-1,268	43,700
K254	-11,000	-0,400	45,700
K256	-10,647	0,400	53,000
K261	7,185	0,960	47,000
K264	11,000	0,400	45,700
K267	7,185	-0,960	47,000
K269	6,480	1,268	43,700
K271	6,480	-1,268	43,700
K282	11,000	-0,400	45,700
K284	10,647	0,400	53,000
K291	-3,677	1,753	38,500
K294	-5,042	1,614	39,996
K298	5,929	1,616	39,971
K301	5,397	1,753	38,500
K302	5,042	1,614	39,996
K306	-5,042	-1,614	39,996
K307	-3,677	-1,753	38,500
K311	-9,475	-0,747	45,700
K314	-9,475	0,747	45,700
K325	-10,647	-0,400	53,000
K335	-6,435	1,081	45,700
K388	-8,004	1,081	45,700
K394	-1,837	1,753	38,500
K395	-1,840	0,000	39,996
K396	1,837	1,753	38,500
K397	1,840	0,000	39,996
K400	-8,778	-0,008	39,672
K401	-8,316	-1,253	38,500
K404	-1,837	-1,753	38,500
K406	1,837	-1,753	38,500
K408	-1,840	-1,614	39,996
K409	-1,840	1,614	39,996
K410	1,840	-1,614	39,996
K411	1,840	1,614	39,996
K414	0,000	1,753	38,500
K420	-13,297	0,400	38,500
K423	-8,778	1,174	39,672
K424	13,297	0,400	38,500
K426	8,316	1,253	38,500
K428	8,778	1,174	39,672
K429	-13,297	-0,400	38,500
K433	-8,778	-1,174	39,672

Naam	Coördinaat X [m]	Coördinaat Y [m]	Coördinaat Z [m]
K434	0,000	-1,753	38,500
K438	3,677	-1,753	38,500
K444	5,397	-1,753	38,500
K447	5,397	0,000	38,500
K448	4,676	1,060	36,510
K451	3,226	1,063	32,505
K456	3,952	-2,126	34,509
K458	13,297	-0,400	38,500
K459	5,929	-1,616	39,971
K460	8,316	-1,253	38,500
K462	8,778	-1,174	39,672
K469	4,678	-1,939	36,515
K470	4,676	-1,060	36,510
K473	-3,677	0,000	38,500
K493	-11,540	0,701	38,500
K496	-11,540	-0,701	38,500
K521	-7,103	-1,461	38,500
K522	-7,103	1,461	38,500
K527	3,677	0,000	38,500
K531	0,000	0,000	38,500
K538	8,778	-0,008	39,672
K546	5,938	0,000	39,994
K550	11,540	-0,701	38,500
K552	9,833	-0,993	38,500
K553	11,540	0,701	38,500
K555	9,833	0,993	38,500
K598	5,042	-1,614	39,996
K601	3,813	-1,939	36,514
K605	3,226	-1,063	32,505
K606	3,226	-2,313	32,505
K618	10,647	-0,400	53,000
K619	-6,526	-1,462	41,620
K620	-6,526	1,462	41,620
K621	6,526	1,462	41,620
K622	6,527	-1,462	41,621
K623	-4,465	0,960	47,000
N2	-3,800	-3,800	10,500
N4	3,800	-3,800	10,500
N5	-3,800	3,800	10,500
N8	3,800	3,800	10,500
N59	-3,582	-3,582	13,860
N61	3,582	-3,582	13,860
N62	-3,582	3,582	13,860
N65	3,582	3,582	13,860
N9	0,000	-3,800	10,500
N66	3,800	0,000	10,500
N67	0,000	3,800	10,500
N68	-3,800	0,000	10,500
N69	-3,691	-3,691	12,180
N14	-1,791	-3,691	12,180
N15	3,691	-3,691	12,180
N16	1,791	-3,691	12,180
N17	3,691	-1,791	12,180
N18	3,691	1,791	12,180
N19	3,691	3,691	12,180
N70	1,791	3,691	12,180
N71	-1,791	3,691	12,180
N72	-3,691	3,691	12,180
N73	-3,691	1,791	12,180
N74	-3,691	-1,791	12,180
N76	-3,151	-3,151	20,480
N78	3,151	-3,151	20,480
N79	-3,151	3,151	20,480
N82	3,151	3,151	20,480
N87	1,791	-3,467	15,621
N88	3,467	-3,467	15,621
N89	3,467	-1,791	15,621

D&C ENGINEERING	Project	- 150 kV lijn Leiden - Zoetermeer
	Onderdeel	- berekening Mast 55
	Omschrijving	- ontwerpberekening
	Nationale norm	EC - EN
	Auteur	- SMA

Naam	Coördinaat X [m]	Coördinaat Y [m]	Coördinaat Z [m]
N90	3,467	1,791	15,621
N91	3,467	3,467	15,621
N92	1,791	3,467	15,621
N93	-1,791	3,467	15,621
N94	-3,467	3,467	15,621
N95	-3,467	1,791	15,621
N96	-3,467	-1,791	15,621
N97	-3,467	-3,467	15,621
N98	-1,791	-3,467	15,621
N99	1,576	-3,252	18,931
N100	3,252	-3,252	18,931
N101	3,252	-1,576	18,931
N102	3,252	1,575	18,931
N33	3,252	3,252	18,931
N103	1,576	3,252	18,931
N104	-1,576	3,252	18,931
N105	-3,252	3,252	18,931
N106	-3,252	1,575	18,931
N38	-3,252	-1,576	18,931
N107	-3,252	-3,252	18,931
N108	-1,576	-3,252	18,931
N114	-2,720	-2,721	27,100
N116	2,721	-2,721	27,100
N117	-2,720	2,720	27,100
N120	2,721	2,720	27,100
N121	-2,920	-2,920	24,033
N122	2,920	-2,920	24,033
N123	2,920	2,920	24,033
N124	-2,920	2,920	24,033
N125	1,576	-3,036	22,256
N126	3,036	-3,036	22,256
N127	3,036	-1,576	22,256
N128	3,036	1,575	22,256
N129	3,036	3,035	22,256
N130	1,576	3,035	22,256
N131	-1,576	3,035	22,256
N132	-3,036	3,035	22,256
N133	-3,036	1,575	22,256
N134	-3,036	-1,576	22,256
N135	-3,036	-3,036	22,256
N136	-1,576	-3,036	22,256
N137	1,361	-2,821	25,566
N138	2,821	-2,821	25,566
N139	2,821	-1,361	25,566
N140	2,821	1,360	25,566
N141	2,821	2,820	25,566
N142	1,361	2,820	25,566
N143	-1,360	2,820	25,566
N144	-2,820	2,820	25,566
N145	-2,820	1,360	25,566
N146	-2,820	-1,361	25,566
N147	-2,820	-2,821	25,566
N148	-1,360	-2,821	25,566
N149	2,920	0,000	24,033
N150	0,000	2,920	24,033
N151	-2,920	0,000	24,033
N152	0,000	-2,920	24,033
N156	2,500	-2,500	30,500
N165	-2,610	-2,611	28,800
N166	-1,360	-2,611	28,800
N167	1,360	-2,611	28,800
N168	2,610	-2,611	28,800
N169	2,610	-1,361	28,800

Naam	Coördinaat X [m]	Coördinaat Y [m]	Coördinaat Z [m]
N170	2,610	1,360	28,800
N171	2,610	2,610	28,800
N172	1,361	2,610	28,800
N173	-1,360	2,610	28,800
N174	-2,610	2,610	28,800
N175	-2,610	1,360	28,800
N176	-2,610	-1,361	28,800
K625	2,500	-0,001	30,500
K626	-5,397	1,753	38,500
K627	-4,465	-0,960	47,000
K628	3,952	2,126	34,509
K629	-3,814	-1,939	36,515
K630	-3,814	1,939	36,515
N183	0,000	0,000	30,500
N191	0,000	0,960	47,000
N192	0,000	-0,960	47,000
K631	-11,000	0,400	45,700
N247	0,000	-3,353	17,382
K705	3,353	3,353	17,382
K706	3,353	0,000	17,382
K707	3,353	-3,353	17,382
K708	-3,353	3,353	17,382
K709	0,000	3,353	17,382
K711	-3,353	-3,353	17,382
K712	-3,353	0,000	17,382
N248	-6,000	-6,000	0,000
N260	-4,000	-5,267	3,500
N261	-5,267	-5,267	3,500
N262	-4,533	-4,533	7,000
N276	-5,267	-4,000	3,500
N277	-4,533	-2,000	7,000
N280	-2,000	-4,533	7,000
N64	1,900	1,900	10,500
N284	-1,900	1,900	10,500
N286	1,900	-1,900	10,500
N287	-3,267	-3,267	7,000
N288	-1,900	-1,900	10,500
N289	0,000	0,000	10,500
K655	-5,633	-5,633	1,750
K714	-5,633	-5,000	1,750
K715	-5,000	-5,633	1,750
K718	-4,633	-4,633	3,500
K719	-4,900	-4,900	5,250
K720	-4,900	-3,000	5,250
K721	-3,000	-4,900	5,250
K722	-3,950	-3,950	5,250
K723	-4,167	-4,167	8,750
K724	-4,167	-1,000	8,750
K725	-1,000	-4,167	8,750
K726	-2,583	-2,583	8,750
N290	6,000	-6,000	0,000
K727	5,633	-5,633	1,750
K728	1,000	-4,167	8,750
N291	4,533	-4,533	7,000
N292	2,000	-4,533	7,000
N293	3,267	-3,267	7,000
K729	4,900	-4,900	5,250
K730	4,900	-3,000	5,250
K731	3,000	-4,900	5,250
K732	3,950	-3,950	5,250
N294	5,267	-5,267	3,500
N295	5,267	-4,000	3,500
K733	5,633	-5,000	1,750

Naam	Coördinaat X [m]	Coördinaat Y [m]	Coördinaat Z [m]
K734	5,000	-5,633	1,750
K735	4,633	-4,633	3,500
N296	4,533	-2,000	7,000
K736	4,167	-4,167	8,750
K737	4,167	-1,000	8,750
K738	2,583	-2,583	8,750
N297	4,000	-5,267	3,500
N298	-6,000	6,000	0,000
K739	-5,633	5,633	1,750
K740	-1,000	4,167	8,750
N299	-4,533	4,533	7,000
N300	-2,000	4,533	7,000
N301	-3,267	3,267	7,000
K741	-4,900	4,900	5,250
K742	-4,900	3,000	5,250
K743	-3,000	4,900	5,250
K744	-3,950	3,950	5,250
N302	-5,267	5,267	3,500
N303	-5,267	4,000	3,500
K745	-5,633	5,000	1,750
K746	-5,000	5,633	1,750
K747	-4,633	4,633	3,500
N304	-4,533	2,000	7,000
K748	-4,167	4,167	8,750
K749	-4,167	1,000	8,750
K750	-2,583	2,583	8,750
N305	-4,000	5,267	3,500
N306	6,000	6,000	0,000
K751	5,633	5,633	1,750
N307	4,533	4,533	7,000
N308	2,000	4,533	7,000
N309	3,267	3,267	7,000
K752	4,900	4,900	5,250
K753	3,000	4,900	5,250
K754	3,950	3,950	5,250
N310	5,267	5,267	3,500
N311	5,267	4,000	3,500
K755	5,633	5,000	1,750
K756	5,000	5,633	1,750
K757	4,633	4,633	3,500
K758	4,167	4,167	8,750
N312	4,000	5,267	3,500
K759	4,900	3,000	5,250
N313	4,533	2,000	7,000
K760	4,167	1,000	8,750
K761	2,583	2,583	8,750
K762	1,000	4,167	8,750
K763	0,000	0,000	17,382
K765	-7,103	0,001	38,500
K767	-9,833	-0,993	38,500
K768	-9,833	0,993	38,500
K774	7,103	0,002	38,500
K775	7,103	-1,461	38,500
K776	7,103	1,461	38,500
K780	9,475	-0,747	45,700
K781	9,475	0,747	45,700
K783	6,527	1,462	41,621
K785	6,526	-1,462	41,620
K786	-8,316	1,253	38,500
K787	-4,465	1,081	45,700

4. Knoopnummers

4.1. Knoopnummers steunpunten

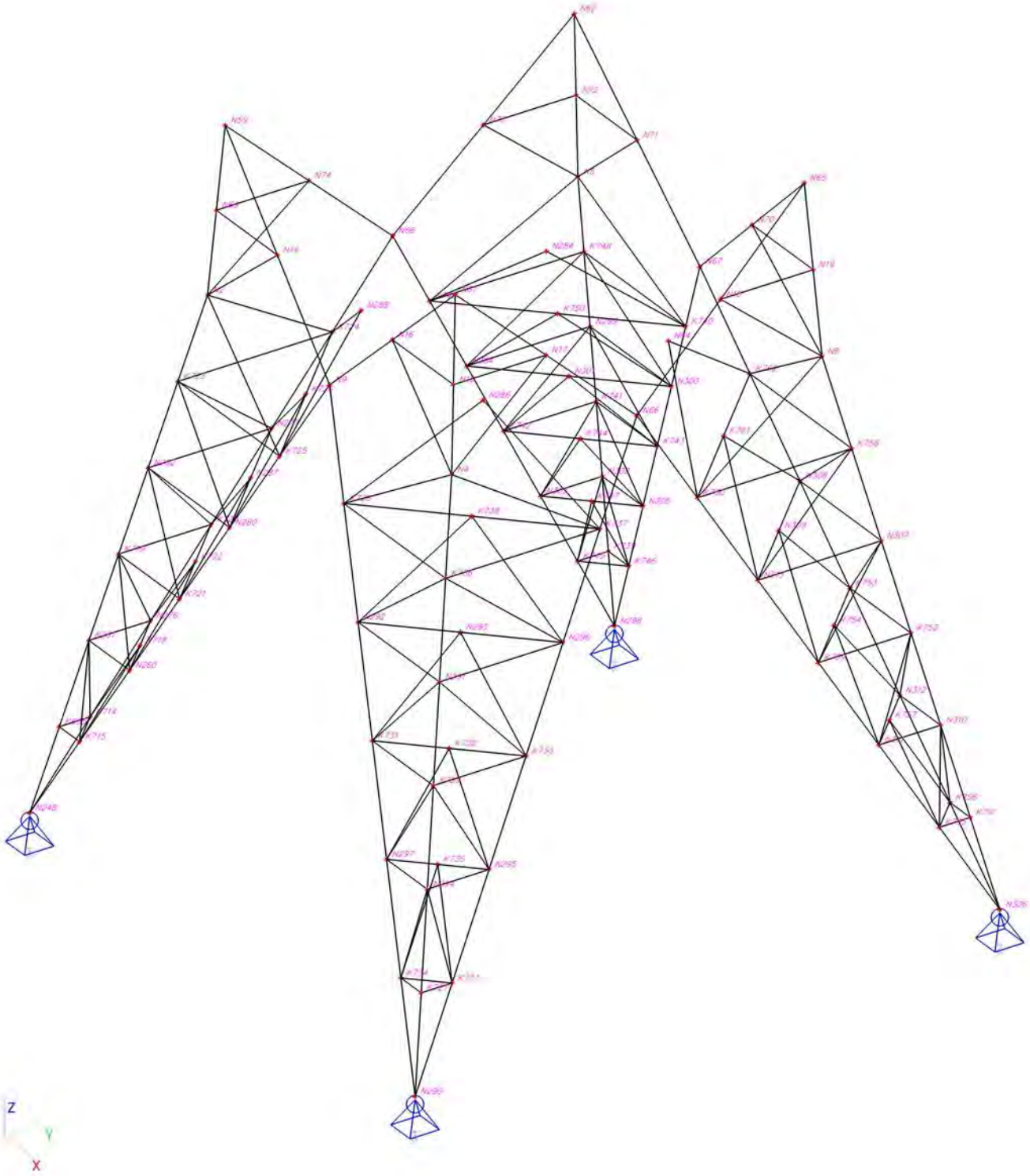

5. 1D-staaf

Laag	Naam	Doorsnede	Lengte [m]	Vorm	Beginknoop	Eindknoop	Type	EEM-type
CrossArm1	S253	CS137 - L100X10	4,732	Lijn	K462	K458	Balk (80)	standaard
CrossArm1	S234	CS137 - L100X10	2,898	Lijn	K298	K428	Balk (80)	standaard
CrossArm1	S254	CS138 - L60X6	2,827	Lijn	K459	K460	Kolom (100)	standaard
CrossArm1	S256	CS137 - L100X10	2,898	Lijn	K459	K462	Balk (80)	standaard
CrossArm1	S255	CS139 - L50X5	1,262	Lijn	K462	K460	Kolom (100)	standaard
CrossArm1	S233	CS139 - L50X5	1,262	Lijn	K428	K426	Kolom (100)	standaard
CrossArm1	S601	CS133 - L50X5	2,922	Lijn	K775	K776	Balk (80)	standaard
CrossArm1	S602	CS134 - L80X8	2,448	Lijn	K444	K774	Balk (80)	standaard
CrossArm1	S223	CS139 - L50X5	2,348	Lijn	K462	K428	Balk (80)	standaard
CrossArm1	S232	CS138 - L60X6	2,827	Lijn	K298	K426	Kolom (100)	standaard
CrossArm1	S231	CS137 - L100X10	4,732	Lijn	K428	K424	Balk (80)	standaard
CrossArm1	S295	CS44 - UNP200	8,015	Lijn	K444	K458	Balk (80)	standaard
CrossArm1	S309	CS135 - L55X6	2,711	Lijn	K426	K552	Balk (80)	standaard
CrossArm1	S308	CS135 - L55X6	2,405	Lijn	K555	K550	Balk (80)	standaard
CrossArm1	S312	CS132 - HEB200	2,506	Lijn	K426	K460	Balk (80)	standaard
CrossArm1	S551	CS132 - HEB200	0,799	Lijn	K424	K458	Balk (80)	standaard
CrossArm1	S340	CS44 - UNP200	8,015	Lijn	K301	K424	Balk (80)	standaard
CrossArm1	S307	CS136 - L65X7	2,073	Lijn	K553	K458	Balk (80)	standaard
CrossArm1	S297	CS139 - L50X5	1,782	Lijn	K538	K426	Kolom (100)	standaard
CrossArm1	S296	CS139 - L50X5	1,771	Lijn	K538	K460	Kolom (100)	standaard
CrossArm1	S302	CS136 - L65X7	2,073	Lijn	K550	K424	Balk (80)	standaard
CrossArm1	S304	CS135 - L55X6	2,711	Lijn	K460	K555	Balk (80)	standaard
CrossArm1	S303	CS135 - L55X6	2,405	Lijn	K552	K553	Balk (80)	standaard
CrossArm1	S603	CS134 - L80X8	1,745	Lijn	K460	K774	Balk (80)	standaard
CrossArm1	S605	CS134 - L80X8	2,445	Lijn	K774	K301	Balk (80)	standaard
CrossArm1	S604	CS134 - L80X8	1,743	Lijn	K774	K426	Balk (80)	standaard
CrossArm2	S238	CS137 - L100X10	2,898	Lijn	K65	K433	Balk (80)	standaard
CrossArm2	S279	CS135 - L55X6	2,405	Lijn	K767	K493	Balk (80)	standaard
CrossArm2	S218	CS139 - L50X5	1,782	Lijn	K400	K786	Kolom (100)	standaard
CrossArm2	S237	CS139 - L50X5	1,262	Lijn	K433	K401	Kolom (100)	standaard
CrossArm2	S230	CS137 - L100X10	2,898	Lijn	K61	K423	Balk (80)	standaard
CrossArm2	S229	CS139 - L50X5	1,262	Lijn	K423	K786	Kolom (100)	standaard
CrossArm2	S228	CS137 - L100X10	4,732	Lijn	K423	K420	Balk (80)	standaard
CrossArm2	S274	CS135 - L55X6	2,405	Lijn	K768	K496	Balk (80)	standaard
CrossArm2	S273	CS136 - L65X7	2,073	Lijn	K493	K429	Balk (80)	standaard
CrossArm2	S548	CS132 - HEB200	0,799	Lijn	K429	K420	Balk (80)	standaard
CrossArm2	S275	CS135 - L55X6	2,710	Lijn	K786	K767	Balk (80)	standaard
CrossArm2	S217	CS139 - L50X5	1,771	Lijn	K400	K401	Kolom (100)	standaard
CrossArm2	S216	CS139 - L50X5	2,348	Lijn	K433	K423	Balk (80)	standaard
CrossArm2	S278	CS136 - L65X7	2,073	Lijn	K496	K420	Balk (80)	standaard
CrossArm2	S235	CS137 - L100X10	4,732	Lijn	K433	K429	Balk (80)	standaard
CrossArm2	S395	CS44 - UNP200	8,015	Lijn	K626	K420	Balk (80)	standaard
CrossArm2	S289	CS44 - UNP200	8,015	Lijn	K63	K429	Balk (80)	standaard
CrossArm2	S600	CS134 - L80X8	2,445	Lijn	K765	K626	Balk (80)	standaard
CrossArm2	S599	CS134 - L80X8	1,743	Lijn	K765	K786	Balk (80)	standaard
CrossArm2	S236	CS138 - L60X6	2,827	Lijn	K65	K401	Kolom (100)	standaard
CrossArm2	S287	CS133 - L50X5	2,922	Lijn	K521	K522	Balk (80)	standaard
CrossArm2	S288	CS134 - L80X8	2,447	Lijn	K63	K765	Balk (80)	standaard
CrossArm2	S280	CS135 - L55X6	2,711	Lijn	K401	K768	Balk (80)	standaard
CrossArm2	S283	CS132 - HEB200	2,506	Lijn	K401	K786	Balk (80)	standaard
CrossArm2	S448	CS138 - L60X6	2,827	Lijn	K61	K786	Balk (80)	standaard
CrossArm2	S465	CS134 - L80X8	1,745	Lijn	K401	K765	Balk (80)	standaard
CrossArm3	S193	CS148 - L60X6	2,347	Lijn	K158	K781	Balk (80)	standaard
CrossArm3	S194	CS149 - UNP180	3,073	Lijn	K156	K264	Balk (80)	standaard
CrossArm3	S195	CS149 - UNP180	3,073	Lijn	K158	K282	Balk (80)	standaard
CrossArm3	S508	CS146 - HEB180	0,800	Lijn	K282	K264	Balk (80)	standaard
CrossArm3	S143	CS147 - L80X8	2,880	Lijn	K144	K264	Balk (80)	standaard
CrossArm3	S152	CS147 - L80X8	2,880	Lijn	K154	K282	Balk (80)	standaard
CrossArm3	S190	CS148 - L60X6	1,908	Lijn	K780	K264	Balk (80)	standaard
CrossArm3	S192	CS148 - L60X6	1,908	Lijn	K781	K282	Balk (80)	standaard
CrossArm3	S191	CS148 - L60X6	2,347	Lijn	K156	K780	Balk (80)	standaard
CrossArm4	S170	CS148 - L60X6	2,347	Lijn	K43	K314	Balk (80)	standaard
CrossArm4	S169	CS148 - L60X6	1,908	Lijn	K314	K254	Balk (80)	standaard
CrossArm4	S171	CS149 - UNP180	3,073	Lijn	K388	K631	Balk (80)	standaard
CrossArm4	S511	CS146 - HEB180	0,800	Lijn	K254	K631	Balk (80)	standaard
CrossArm4	S172	CS149 - UNP180	3,073	Lijn	K43	K254	Balk (80)	standaard
CrossArm4	S168	CS148 - L60X6	2,347	Lijn	K388	K311	Balk (80)	standaard

D&C ENGINEERING	Project	- 150 kV lijn Leiden - Zoetermeer
	Onderdeel	- berekening Mast 55
	Omschrijving	- ontwerpberekening
	Nationale norm	EC - EN
	Auteur	- SMA

Laag	Naam	Doorsnede	Lengte [m]	Vorm	Beginknoop	Eindknoop	Type	EEM-type
CrossArm4	S130	CS147 - L80X8	2,880	Lijn	K29	K631	Balk (80)	standaard
CrossArm4	S138	CS147 - L80X8	2,880	Lijn	K39	K254	Balk (80)	standaard
CrossArm4	S167	CS148 - L60X6	1,908	Lijn	K311	K631	Balk (80)	standaard
CrossArm5	S69	CS12 - L50X5	1,364	Lijn	K124	K120	Balk (80)	standaard
CrossArm5	S73	CS130 - L50X5	2,162	Lijn	K130	K132	Kolom (100)	standaard
CrossArm5	S70	CS12 - L50X5	2,184	Lijn	K128	K124	Kolom (100)	standaard
CrossArm5	S72	CS12 - L50X5	2,184	Lijn	K132	K120	Kolom (100)	standaard
CrossArm5	S71	CS130 - L50X5	2,162	Lijn	K130	K128	Kolom (100)	standaard
CrossArm5	S68	CS12 - L50X5	2,018	Lijn	K124	K122	Kolom (100)	standaard
CrossArm5	S414	CS131 - L80X8	6,823	Lijn	K284	K144	Kolom (100)	standaard
CrossArm5	S426	CS131 - L80X8	6,823	Lijn	K154	K618	Kolom (100)	standaard
CrossArm5	S343	CS160 - HEB120	0,800	Lijn	K618	K284	Balk (80)	standaard
CrossArm5	S67	CS12 - L50X5	1,862	Lijn	K122	K618	Kolom (100)	standaard
CrossArm5	S66	CS12 - L50X5	2,018	Lijn	K120	K118	Kolom (100)	standaard
CrossArm5	S65	CS12 - L50X5	1,862	Lijn	K118	K284	Kolom (100)	standaard
CrossArm5	S74	CS7 - L50X5	1,511	Lijn	K136	K120	Kolom (100)	standaard
CrossArm5	S77	CS7 - L50X5	0,649	Lijn	K115	K120	Balk (80)	standaard
CrossArm5	S83	CS7 - L50X5	0,649	Lijn	K117	K124	Balk (80)	standaard
CrossArm5	S82	CS7 - L50X5	1,501	Lijn	K117	K132	Kolom (100)	standaard
CrossArm5	S84	CS7 - L50X5	1,911	Lijn	K153	K154	Kolom (100)	standaard
CrossArm5	S85	CS7 - L50X5	0,969	Lijn	K153	K132	Balk (80)	standaard
CrossArm5	S482	CS21 - L100X75X7	6,950	Polylijn	K284	K261	Kolom (100)	standaard
CrossArm5	S483	CS21 - L100X75X7	6,950	Lijn	K267	K618	Kolom (100)	standaard
CrossArm5	S76	CS7 - L50X5	1,501	Lijn	K115	K128	Kolom (100)	standaard
CrossArm5	S79	CS7 - L50X5	0,969	Lijn	K143	K128	Balk (80)	standaard
CrossArm5	S75	CS7 - L50X5	0,336	Lijn	K136	K122	Balk (80)	standaard
CrossArm5	S80	CS7 - L50X5	1,511	Lijn	K146	K124	Kolom (100)	standaard
CrossArm5	S78	CS7 - L50X5	1,911	Lijn	K143	K144	Kolom (100)	standaard
CrossArm5	S81	CS7 - L50X5	0,336	Lijn	K146	K118	Balk (80)	standaard
CrossArm6	S12	CS7 - L50X5	0,336	Lijn	K21	K7	Balk (80)	standaard
CrossArm6	S13	CS7 - L50X5	1,501	Lijn	K24	K13	Kolom (100)	standaard
CrossArm6	S9	CS12 - L50X5	2,184	Lijn	K17	K5	Kolom (100)	standaard
CrossArm6	S373	CS131 - L80X8	6,823	Lijn	K325	K39	Kolom (100)	standaard
CrossArm6	S11	CS7 - L50X5	1,511	Lijn	K21	K5	Kolom (100)	standaard
CrossArm6	S10	CS130 - L50X5	2,162	Lijn	K15	K17	Kolom (100)	standaard
CrossArm6	S8	CS130 - L50X5	2,162	Lijn	K15	K13	Kolom (100)	standaard
CrossArm6	S5	CS12 - L50X5	2,018	Lijn	K9	K7	Kolom (100)	standaard
CrossArm6	S4	CS12 - L50X5	1,862	Lijn	K7	K325	Kolom (100)	standaard
CrossArm6	S7	CS12 - L50X5	2,184	Lijn	K13	K9	Kolom (100)	standaard
CrossArm6	S6	CS12 - L50X5	1,364	Lijn	K9	K5	Balk (80)	standaard
CrossArm6	S18	CS7 - L50X5	0,336	Lijn	K31	K3	Balk (80)	standaard
CrossArm6	S486	CS131 - L80X8	6,823	Lijn	K29	K256	Kolom (100)	standaard
CrossArm6	S17	CS7 - L50X5	1,511	Lijn	K31	K9	Kolom (100)	standaard
CrossArm6	S484	CS21 - L100X75X7	6,950	Lijn	K233	K256	Kolom (100)	standaard
CrossArm6	S485	CS21 - L100X75X7	6,950	Polylijn	K325	K235	Kolom (100)	standaard
CrossArm6	S14	CS7 - L50X5	0,649	Lijn	K24	K5	Balk (80)	standaard
CrossArm6	S2	CS12 - L50X5	1,862	Lijn	K3	K256	Kolom (100)	standaard
CrossArm6	S16	CS7 - L50X5	0,969	Lijn	K28	K13	Balk (80)	standaard
CrossArm6	S15	CS7 - L50X5	1,911	Lijn	K28	K29	Kolom (100)	standaard
CrossArm6	S175	CS160 - HEB120	0,800	Lijn	K325	K256	Balk (80)	standaard
CrossArm6	S19	CS7 - L50X5	1,501	Lijn	K1	K17	Kolom (100)	standaard
CrossArm6	S20	CS7 - L50X5	0,649	Lijn	K1	K9	Balk (80)	standaard
CrossArm6	S21	CS7 - L50X5	1,911	Lijn	K38	K39	Kolom (100)	standaard
CrossArm6	S3	CS12 - L50X5	2,018	Lijn	K5	K3	Kolom (100)	standaard
CrossArm6	S22	CS7 - L50X5	0,969	Lijn	K38	K17	Balk (80)	standaard
HorVerb1	B183	CS6 - L150X14	7,600	Lijn	N8	N5	Balk (80)	standaard
HorVerb1	B186	CS117 - L75X8	7,600	Polylijn	N68	N66	vakwerkdiagonaal (90)	standaard
HorVerb1	B187	CS117 - L75X8	3,800	Lijn	N289	N67	vakwerkdiagonaal (90)	standaard
HorVerb1	B184	CS6 - L150X14	7,600	Lijn	N5	N2	Balk (80)	standaard
HorVerb1	B185	CS117 - L75X8	3,800	Lijn	N9	N289	vakwerkdiagonaal (90)	standaard
HorVerb1	B88	CS118 - L70X7	5,374	Lijn	N67	N66	vakwerkdiagonaal (90)	standaard
HorVerb1	B160	CS118 - L70X7	5,374	Lijn	N66	N9	vakwerkdiagonaal (90)	standaard
HorVerb1	B86	CS118 - L70X7	5,374	Lijn	N9	N68	vakwerkdiagonaal (90)	standaard
HorVerb1	B87	CS118 - L70X7	5,374	Lijn	N68	N67	vakwerkdiagonaal (90)	standaard
HorVerb1	B181	CS6 - L150X14	7,600	Lijn	N2	N4	Balk (80)	standaard
HorVerb1	B182	CS6 - L150X14	7,600	Lijn	N4	N8	Balk (80)	standaard
HorVerb2	S591	CS104 - L65X7	3,353	Lijn	K706	K707	Balk (80)	standaard
HorVerb2	S590	CS104 - L65X7	3,353	Lijn	K705	K706	Balk (80)	standaard
HorVerb2	S589	CS104 - L65X7	3,353	Lijn	N247	K711	Balk (80)	standaard

D&C ENGINEERING	Project	- 150 kV lijn Leiden - Zoetermeer
	Onderdeel	- berekening Mast 55
	Omschrijving	- ontwerpberekening
	Nationale norm	EC - EN
	Auteur	- SMA

Laag	Naam	Doorsnede	Lengte [m]	Vorm	Beginknoop	Eindknoop	Type	EEM-type
HorVerb2	S593	CS104 - L65X7	3,353	Lijn	K709	K705	Balk (80)	standaard
HorVerb2	S594	CS104 - L65X7	3,353	Lijn	K711	K712	Balk (80)	standaard
HorVerb2	S595	CS104 - L65X7	3,353	Lijn	K712	K708	Balk (80)	standaard
HorVerb2	S592	CS104 - L65X7	3,353	Lijn	K708	K709	Balk (80)	standaard
HorVerb2	S588	CS104 - L65X7	3,353	Lijn	K707	N247	Balk (80)	standaard
HorVerb2	S526	CS59 - L70/7	4,741	Lijn	K712	K709	Balk (80)	standaard
HorVerb2	S596	CS121 - L60X6	3,353	Lijn	K763	K709	Balk (80)	standaard
HorVerb2	S597	CS121 - L60X6	6,705	Lijn	K712	K706	Balk (80)	standaard
HorVerb2	S527	CS59 - L70/7	4,741	Lijn	K709	K706	Balk (80)	standaard
HorVerb2	S533	CS121 - L60X6	3,353	Lijn	N247	K763	Balk (80)	standaard
HorVerb2	S529	CS59 - L70/7	4,741	Lijn	N247	K712	Balk (80)	standaard
HorVerb2	S528	CS59 - L70/7	4,741	Lijn	K706	N247	Balk (80)	standaard
HorVerb3	S470	CS78 - L150X14	2,500	Lijn	K99	K91	Balk (80)	standaard
HorVerb3	S469	CS78 - L150X14	2,500	Lijn	K102	K99	Balk (80)	standaard
HorVerb3	S468	CS78 - L150X14	2,500	Lijn	K109	K102	Balk (80)	standaard
HorVerb3	S471	CS78 - L150X14	2,500	Lijn	K91	K93	Balk (80)	standaard
HorVerb3	S473	CS78 - L150X14	2,501	Lijn	K112	K625	Balk (80)	standaard
HorVerb3	S472	CS78 - L150X14	2,500	Lijn	K93	K112	Balk (80)	standaard
HorVerb3	S474	CS78 - L150X14	2,499	Lijn	K625	N156	Balk (80)	standaard
HorVerb3	S467	CS78 - L150X14	2,500	Lijn	N156	K109	Balk (80)	standaard
HorVerb3	B129	CS79 - L90X9	3,536	Lijn	K99	K93	vakwerkdiagonaal (90)	standaard
HorVerb3	B130	CS79 - L90X9	3,536	Lijn	K93	K625	vakwerkdiagonaal (90)	standaard
HorVerb3	B131	CS79 - L90X9	3,535	Lijn	K625	K109	vakwerkdiagonaal (90)	standaard
HorVerb3	B133	CS77 - L75X8	5,000	Polylijn	K99	K625	vakwerkdiagonaal (90)	standaard
HorVerb3	B132	CS79 - L90X9	3,536	Lijn	K99	K109	vakwerkdiagonaal (90)	standaard
Vak1	SB279	CS115 - L60X6	2,355	Lijn	K721	N262	vertikaal windverband (0)	standaard
Vak1	SB280	CS115 - L60X6	2,355	Lijn	K720	N262	vertikaal windverband (0)	standaard
Vak1	B192	CS8 - L50X5	2,409	Lijn	K720	N287	vertikaal windverband (0)	standaard
Vak1	B193	CS8 - L50X5	2,409	Lijn	K721	N287	vertikaal windverband (0)	standaard
Vak1	B194	CS120 - L55X6	4,478	Lijn	K725	K724	vertikaal windverband (0)	standaard
Vak1	B196	CS120 - L55X6	3,002	Lijn	K724	N288	vertikaal windverband (0)	standaard
Vak1	B179	CS120 - L55X6	2,684	Lijn	N280	K726	vertikaal windverband (0)	standaard
Vak1	B180	CS120 - L55X6	2,684	Lijn	N277	K726	vertikaal windverband (0)	standaard
Vak1	SB281	CS119 - L65X7	3,167	Lijn	K723	K724	vertikaal windverband (0)	standaard
Vak1	SB282	CS119 - L65X7	3,167	Lijn	K725	K723	vertikaal windverband (0)	standaard
Vak1	B195	CS120 - L55X6	3,002	Lijn	K725	N288	vertikaal windverband (0)	standaard
Vak1	B191	CS8 - L50X5	2,687	Lijn	K721	K720	vertikaal windverband (0)	standaard
Vak1	B189	CS8 - L50X5	2,049	Lijn	K714	K718	vertikaal windverband (0)	standaard
Vak1	B188	CS8 - L50X5	0,896	Lijn	K715	K714	vertikaal windverband (0)	standaard
Vak1	SB274	CS115 - L60X6	0,633	Lijn	K715	K655	vertikaal windverband (0)	standaard
Vak1	SB250	CS115 - L60X6	2,533	Lijn	N262	N277	vertikaal windverband (0)	standaard
Vak1	SB275	CS115 - L60X6	1,808	Lijn	K715	N261	vertikaal windverband (0)	standaard
Vak1	B190	CS8 - L50X5	2,049	Lijn	K715	K718	vertikaal windverband (0)	standaard
Vak1	B159	CS114 - L130X12	12,292	Lijn	N248	N68	vakwerkdiagonaal (90)	standaard
Vak1	C29	CS113 - L200X26	10,951	Lijn	N248	N2	Kolom (100)	standaard
Vak1	B154	CS114 - L130X12	12,292	Lijn	N248	N9	vakwerkdiagonaal (90)	standaard
Vak1	SB273	CS115 - L60X6	0,633	Lijn	K655	K714	vertikaal windverband (0)	standaard
Vak1	SB249	CS115 - L60X6	1,267	Lijn	N261	N276	vertikaal windverband (0)	standaard
Vak1	SB241	CS115 - L60X6	1,267	Lijn	N260	N261	vertikaal windverband (0)	standaard
Vak1	B85	CS120 - L55X6	3,583	Lijn	N280	N277	vertikaal windverband (0)	standaard
Vak1	B84	CS8 - L50X5	1,791	Lijn	N260	N276	vertikaal windverband (0)	standaard
Vak1	SB277	CS115 - L60X6	1,900	Lijn	K719	K720	vertikaal windverband (0)	standaard
Vak1	SB278	CS115 - L60X6	1,900	Lijn	K721	K719	vertikaal windverband (0)	standaard
Vak1	B178	CS8 - L50X5	2,191	Lijn	N276	K722	vertikaal windverband (0)	standaard
Vak1	B177	CS8 - L50X5	2,191	Lijn	N260	K722	vertikaal windverband (0)	standaard
Vak1	SB260	CS119 - L65X7	2,809	Lijn	N277	K723	vertikaal windverband (0)	standaard
Vak1	SB259	CS115 - L60X6	2,002	Lijn	N276	K719	vertikaal windverband (0)	standaard
Vak1	SB252	CS115 - L60X6	2,533	Lijn	N280	N262	vertikaal windverband (0)	standaard
Vak1	SB276	CS115 - L60X6	1,808	Lijn	K714	N261	vertikaal windverband (0)	standaard
Vak1	SB272	CS115 - L60X6	2,002	Lijn	N260	K719	vertikaal windverband (0)	standaard
Vak1	SB261	CS119 - L65X7	2,809	Lijn	N280	K723	vertikaal windverband (0)	standaard
Vak1	SB342	CS119 - L65X7	2,809	Lijn	N313	K758	vertikaal windverband (0)	standaard
Vak1	SB341	CS119 - L65X7	3,167	Lijn	K758	K760	vertikaal windverband (0)	standaard
Vak1	SB340	CS115 - L60X6	1,808	Lijn	K755	N310	vertikaal windverband (0)	standaard
Vak1	B245	CS120 - L55X6	2,684	Lijn	N313	K761	vertikaal windverband (0)	standaard
Vak1	SB344	CS119 - L65X7	3,322	Lijn	K760	N8	vertikaal windverband (0)	standaard
Vak1	B246	CS120 - L55X6	3,002	Lijn	K760	N64	vertikaal windverband (0)	standaard
Vak1	SB343	CS119 - L65X7	3,322	Lijn	K762	N8	vertikaal windverband (0)	standaard
Vak1	B241	CS8 - L50X5	1,791	Lijn	N312	N311	vertikaal windverband (0)	standaard

D&C ENGINEERING	Project	- 150 kV lijn Leiden - Zoetermeer
	Onderdeel	- berekening Mast 55
	Omschrijving	- ontwerpberekening
	Nationale norm	EC - EN
	Auteur	- SMA

Laag	Naam	Doorsnede	Lengte [m]	Vorm	Beginknoop	Eindknoop	Type	EEM-type
Vak1	SB338	CS115 - L60X6	1,267	Lijn	N310	N311	vertikaal windverband (0)	standaard
Vak1	SB337	CS115 - L60X6	1,267	Lijn	N312	N310	vertikaal windverband (0)	standaard
Vak1	B242	CS8 - L50X5	0,896	Lijn	K756	K755	vertikaal windverband (0)	standaard
Vak1	SB339	CS115 - L60X6	1,808	Lijn	K756	N310	vertikaal windverband (0)	standaard
Vak1	B244	CS8 - L50X5	2,049	Lijn	K756	K757	vertikaal windverband (0)	standaard
Vak1	B243	CS8 - L50X5	2,049	Lijn	K755	K757	vertikaal windverband (0)	standaard
Vak1	B247	CS120 - L55X6	3,002	Lijn	K762	N64	vertikaal windverband (0)	standaard
Vak1	B224	CS8 - L50X5	2,687	Lijn	K743	K742	vertikaal windverband (0)	standaard
Vak1	SB316	CS115 - L60X6	2,355	Lijn	K743	N299	vertikaal windverband (0)	standaard
Vak1	SB317	CS115 - L60X6	2,355	Lijn	K742	N299	vertikaal windverband (0)	standaard
Vak1	SB315	CS115 - L60X6	1,900	Lijn	K743	K741	vertikaal windverband (0)	standaard
Vak1	B222	CS8 - L50X5	2,191	Lijn	N305	K744	vertikaal windverband (0)	standaard
Vak1	B223	CS8 - L50X5	2,191	Lijn	N303	K744	vertikaal windverband (0)	standaard
Vak1	SB314	CS115 - L60X6	1,900	Lijn	K741	K742	vertikaal windverband (0)	standaard
Vak1	B227	CS8 - L50X5	1,791	Lijn	N305	N303	vertikaal windverband (0)	standaard
Vak1	B228	CS8 - L50X5	0,896	Lijn	K746	K745	vertikaal windverband (0)	standaard
Vak1	B229	CS8 - L50X5	2,049	Lijn	K745	K747	vertikaal windverband (0)	standaard
Vak1	SB319	CS115 - L60X6	1,267	Lijn	N302	N303	vertikaal windverband (0)	standaard
Vak1	B225	CS8 - L50X5	2,409	Lijn	K742	N301	vertikaal windverband (0)	standaard
Vak1	B226	CS8 - L50X5	2,409	Lijn	K743	N301	vertikaal windverband (0)	standaard
Vak1	SB318	CS115 - L60X6	1,267	Lijn	N305	N302	vertikaal windverband (0)	standaard
Vak1	SB325	CS115 - L60X6	0,633	Lijn	K751	K755	vertikaal windverband (0)	standaard
Vak1	B232	CS114 - L130X12	12,292	Lijn	N306	N66	vakwerkdiagonaal (90)	standaard
Vak1	B231	CS114 - L130X12	12,292	Lijn	N306	N67	vakwerkdiagonaal (90)	standaard
Vak1	SB326	CS115 - L60X6	0,633	Lijn	K756	K751	vertikaal windverband (0)	standaard
Vak1	B235	CS120 - L55X6	4,478	Lijn	K762	K760	vertikaal windverband (0)	standaard
Vak1	B234	CS120 - L55X6	2,684	Lijn	N308	K761	vertikaal windverband (0)	standaard
Vak1	B233	CS120 - L55X6	3,583	Lijn	N308	N313	vertikaal windverband (0)	standaard
Vak1	SB321	CS115 - L60X6	1,808	Lijn	K745	N302	vertikaal windverband (0)	standaard
Vak1	SB320	CS115 - L60X6	1,808	Lijn	K746	N302	vertikaal windverband (0)	standaard
Vak1	B230	CS8 - L50X5	2,049	Lijn	K746	K747	vertikaal windverband (0)	standaard
Vak1	SB322	CS119 - L65X7	3,167	Lijn	K748	K749	vertikaal windverband (0)	standaard
Vak1	C32	CS113 - L200X26	10,951	Lijn	N306	N8	Kolom (100)	standaard
Vak1	SB324	CS119 - L65X7	3,322	Lijn	K749	N5	vertikaal windverband (0)	standaard
Vak1	SB323	CS119 - L65X7	2,809	Lijn	N304	K748	vertikaal windverband (0)	standaard
Vak1	SB327	CS119 - L65X7	3,167	Lijn	K762	K758	vertikaal windverband (0)	standaard
Vak1	B238	CS8 - L50X5	2,687	Lijn	K753	K759	vertikaal windverband (0)	standaard
Vak1	SB334	CS115 - L60X6	1,900	Lijn	K753	K752	vertikaal windverband (0)	standaard
Vak1	SB333	CS115 - L60X6	1,900	Lijn	K752	K759	vertikaal windverband (0)	standaard
Vak1	SB335	CS115 - L60X6	2,355	Lijn	K753	N307	vertikaal windverband (0)	standaard
Vak1	B240	CS8 - L50X5	2,409	Lijn	K753	N309	vertikaal windverband (0)	standaard
Vak1	B239	CS8 - L50X5	2,409	Lijn	K759	N309	vertikaal windverband (0)	standaard
Vak1	SB336	CS115 - L60X6	2,355	Lijn	K759	N307	vertikaal windverband (0)	standaard
Vak1	SB330	CS115 - L60X6	2,002	Lijn	N311	K752	vertikaal windverband (0)	standaard
Vak1	SB329	CS115 - L60X6	2,533	Lijn	N308	N307	vertikaal windverband (0)	standaard
Vak1	SB328	CS115 - L60X6	2,533	Lijn	N307	N313	vertikaal windverband (0)	standaard
Vak1	SB331	CS119 - L65X7	2,809	Lijn	N308	K758	vertikaal windverband (0)	standaard
Vak1	B237	CS8 - L50X5	2,191	Lijn	N311	K754	vertikaal windverband (0)	standaard
Vak1	B236	CS8 - L50X5	2,191	Lijn	N312	K754	vertikaal windverband (0)	standaard
Vak1	SB332	CS115 - L60X6	2,002	Lijn	N312	K752	vertikaal windverband (0)	standaard
Vak1	SB293	CS115 - L60X6	2,002	Lijn	N297	K729	vertikaal windverband (0)	standaard
Vak1	B205	CS8 - L50X5	2,191	Lijn	N297	K732	vertikaal windverband (0)	standaard
Vak1	B206	CS8 - L50X5	2,191	Lijn	N295	K732	vertikaal windverband (0)	standaard
Vak1	SB292	CS119 - L65X7	2,809	Lijn	N292	K736	vertikaal windverband (0)	standaard
Vak1	SB289	CS115 - L60X6	2,533	Lijn	N291	N296	vertikaal windverband (0)	standaard
Vak1	SB290	CS115 - L60X6	2,533	Lijn	N292	N291	vertikaal windverband (0)	standaard
Vak1	SB291	CS115 - L60X6	2,002	Lijn	N295	K729	vertikaal windverband (0)	standaard
Vak1	SB297	CS115 - L60X6	2,355	Lijn	K730	N291	vertikaal windverband (0)	standaard
Vak1	B208	CS8 - L50X5	2,409	Lijn	K730	N293	vertikaal windverband (0)	standaard
Vak1	B209	CS8 - L50X5	2,409	Lijn	K731	N293	vertikaal windverband (0)	standaard
Vak1	SB296	CS115 - L60X6	2,355	Lijn	K731	N291	vertikaal windverband (0)	standaard
Vak1	SB294	CS115 - L60X6	1,900	Lijn	K729	K730	vertikaal windverband (0)	standaard
Vak1	SB295	CS115 - L60X6	1,900	Lijn	K731	K729	vertikaal windverband (0)	standaard
Vak1	B207	CS8 - L50X5	2,687	Lijn	K731	K730	vertikaal windverband (0)	standaard
Vak1	B204	CS120 - L55X6	3,002	Lijn	K737	N286	vertikaal windverband (0)	standaard
Vak1	B198	CS114 - L130X12	12,292	Lijn	N290	N66	vakwerkdiagonaal (90)	standaard
Vak1	SB285	CS115 - L60X6	0,633	Lijn	K727	K733	vertikaal windverband (0)	standaard
Vak1	SB286	CS115 - L60X6	0,633	Lijn	K734	K727	vertikaal windverband (0)	standaard
Vak1	B197	CS114 - L130X12	12,292	Lijn	N290	N9	vakwerkdiagonaal (90)	standaard

D&C ENGINEERING	Project	- 150 kV lijn Leiden - Zoetermeer
	Onderdeel	- berekening Mast 55
	Omschrijving	- ontwerpberekening
	Nationale norm	EC - EN
	Auteur	- SMA

Laag	Naam	Doorsnede	Lengte [m]	Vorm	Beginknoop	Eindknoop	Type	EEM-type
Vak1	SB283	CS119 - L65X7	3,322	Lijn	K725	N2	vertikaal windverband (0)	standaard
Vak1	SB284	CS119 - L65X7	3,322	Lijn	K724	N2	vertikaal windverband (0)	standaard
Vak1	C30	CS113 - L200X26	10,951	Lijn	N290	N4	Kolom (100)	standaard
Vak1	SB287	CS119 - L65X7	3,167	Lijn	K728	K736	vertikaal windverband (0)	standaard
Vak1	B203	CS120 - L55X6	3,002	Lijn	K728	N286	vertikaal windverband (0)	standaard
Vak1	SB288	CS119 - L65X7	3,322	Lijn	K728	N4	vertikaal windverband (0)	standaard
Vak1	B202	CS120 - L55X6	4,478	Lijn	K728	K737	vertikaal windverband (0)	standaard
Vak1	B199	CS120 - L55X6	3,583	Lijn	N292	N296	vertikaal windverband (0)	standaard
Vak1	B200	CS120 - L55X6	2,684	Lijn	N292	K738	vertikaal windverband (0)	standaard
Vak1	B201	CS120 - L55X6	2,684	Lijn	N296	K738	vertikaal windverband (0)	standaard
Vak1	B219	CS120 - L55X6	4,478	Lijn	K740	K749	vertikaal windverband (0)	standaard
Vak1	SB307	CS119 - L65X7	3,167	Lijn	K740	K748	vertikaal windverband (0)	standaard
Vak1	B220	CS120 - L55X6	3,002	Lijn	K740	N284	vertikaal windverband (0)	standaard
Vak1	B218	CS120 - L55X6	2,684	Lijn	N304	K750	vertikaal windverband (0)	standaard
Vak1	SB306	CS115 - L60X6	0,633	Lijn	K746	K739	vertikaal windverband (0)	standaard
Vak1	B216	CS120 - L55X6	3,583	Lijn	N300	N304	vertikaal windverband (0)	standaard
Vak1	B217	CS120 - L55X6	2,684	Lijn	N300	K750	vertikaal windverband (0)	standaard
Vak1	SB311	CS115 - L60X6	2,002	Lijn	N303	K741	vertikaal windverband (0)	standaard
Vak1	SB312	CS119 - L65X7	2,809	Lijn	N300	K748	vertikaal windverband (0)	standaard
Vak1	SB313	CS115 - L60X6	2,002	Lijn	N305	K741	vertikaal windverband (0)	standaard
Vak1	SB310	CS115 - L60X6	2,533	Lijn	N300	N299	vertikaal windverband (0)	standaard
Vak1	SB308	CS119 - L65X7	3,322	Lijn	K740	N5	vertikaal windverband (0)	standaard
Vak1	B221	CS120 - L55X6	3,002	Lijn	K749	N284	vertikaal windverband (0)	standaard
Vak1	SB309	CS115 - L60X6	2,533	Lijn	N299	N304	vertikaal windverband (0)	standaard
Vak1	SB305	CS115 - L60X6	0,633	Lijn	K739	K745	vertikaal windverband (0)	standaard
Vak1	B212	CS8 - L50X5	2,049	Lijn	K733	K735	vertikaal windverband (0)	standaard
Vak1	B213	CS8 - L50X5	2,049	Lijn	K734	K735	vertikaal windverband (0)	standaard
Vak1	SB300	CS115 - L60X6	1,808	Lijn	K734	N294	vertikaal windverband (0)	standaard
Vak1	B211	CS8 - L50X5	0,896	Lijn	K734	K733	vertikaal windverband (0)	standaard
Vak1	SB298	CS115 - L60X6	1,267	Lijn	N297	N294	vertikaal windverband (0)	standaard
Vak1	SB299	CS115 - L60X6	1,267	Lijn	N294	N295	vertikaal windverband (0)	standaard
Vak1	B210	CS8 - L50X5	1,791	Lijn	N297	N295	vertikaal windverband (0)	standaard
Vak1	C31	CS113 - L200X26	10,951	Lijn	N298	N5	Kolom (100)	standaard
Vak1	B214	CS114 - L130X12	12,292	Lijn	N298	N67	vakwerkdiagonaal (90)	standaard
Vak1	B215	CS114 - L130X12	12,292	Lijn	N298	N68	vakwerkdiagonaal (90)	standaard
Vak1	SB304	CS119 - L65X7	3,322	Lijn	K737	N4	vertikaal windverband (0)	standaard
Vak1	SB301	CS115 - L60X6	1,808	Lijn	K733	N294	vertikaal windverband (0)	standaard
Vak1	SB302	CS119 - L65X7	3,167	Lijn	K736	K737	vertikaal windverband (0)	standaard
Vak1	SB303	CS119 - L65X7	2,809	Lijn	N296	K736	vertikaal windverband (0)	standaard
Vak2	SB59	CS63 - L55X6	1,900	Lijn	N72	N71	vertikaal windverband (0)	standaard
Vak2	SB60	CS65 - L55X6	2,621	Lijn	N5	N71	vertikaal windverband (0)	standaard
Vak2	SB61	CS63 - L55X6	1,900	Lijn	N73	N72	vertikaal windverband (0)	standaard
Vak2	SB58	CS65 - L55X6	2,621	Lijn	N8	N70	vertikaal windverband (0)	standaard
Vak2	SB55	CS63 - L55X6	1,900	Lijn	N19	N18	vertikaal windverband (0)	standaard
Vak2	SB56	CS65 - L55X6	2,621	Lijn	N8	N18	vertikaal windverband (0)	standaard
Vak2	SB57	CS63 - L55X6	1,900	Lijn	N70	N19	vertikaal windverband (0)	standaard
Vak2	B32	CS100 - L150X100X10	4,916	Lijn	N67	N62	vakwerkdiagonaal (90)	standaard
Vak2	B33	CS100 - L150X100X10	4,916	Lijn	N68	N59	vakwerkdiagonaal (90)	standaard
Vak2	B34	CS100 - L150X100X10	4,916	Lijn	N9	N59	vakwerkdiagonaal (90)	standaard
Vak2	B31	CS100 - L150X100X10	4,916	Lijn	N66	N61	vakwerkdiagonaal (90)	standaard
Vak2	SB62	CS65 - L55X6	2,621	Lijn	N5	N73	vertikaal windverband (0)	standaard
Vak2	SB63	CS63 - L55X6	1,900	Lijn	N69	N74	vertikaal windverband (0)	standaard
Vak2	SB64	CS65 - L55X6	2,621	Lijn	N2	N74	vertikaal windverband (0)	standaard
Vak2	B8	CS100 - L150X100X10	4,916	Lijn	N9	N61	vakwerkdiagonaal (90)	standaard
Vak2	B10	CS100 - L150X100X10	4,916	Lijn	N66	N65	vakwerkdiagonaal (90)	standaard
Vak2	B12	CS100 - L150X100X10	4,916	Lijn	N67	N65	vakwerkdiagonaal (90)	standaard
Vak2	C8	CS113 - L200X26	3,374	Lijn	N8	N65	Kolom (100)	standaard
Vak2	C5	CS113 - L200X26	3,374	Lijn	N2	N59	Kolom (100)	standaard
Vak2	C6	CS113 - L200X26	3,374	Lijn	N4	N61	Kolom (100)	standaard
Vak2	C7	CS113 - L200X26	3,374	Lijn	N5	N62	Kolom (100)	standaard
Vak2	SB52	CS65 - L55X6	2,621	Lijn	N4	N16	vertikaal windverband (0)	standaard
Vak2	SB53	CS63 - L55X6	1,900	Lijn	N17	N15	vertikaal windverband (0)	standaard
Vak2	SB54	CS65 - L55X6	2,621	Lijn	N4	N17	vertikaal windverband (0)	standaard
Vak2	SB51	CS63 - L55X6	1,900	Lijn	N15	N16	vertikaal windverband (0)	standaard
Vak2	B93	CS100 - L150X100X10	4,916	Lijn	N68	N62	vakwerkdiagonaal (90)	standaard
Vak2	SB49	CS63 - L55X6	1,900	Lijn	N14	N69	vertikaal windverband (0)	standaard
Vak2	SB50	CS65 - L55X6	2,621	Lijn	N2	N14	vertikaal windverband (0)	standaard
Vak3	B95	CS68 - L150X100X12	9,452	Lijn	N65	N78	vakwerkdiagonaal (90)	standaard
Vak3	B94	CS68 - L150X100X12	9,452	Lijn	N61	N76	vakwerkdiagonaal (90)	standaard

D&C ENGINEERING	Project	- 150 kV lijn Leiden - Zoetermeer
	Onderdeel	- berekening Mast 55
	Omschrijving	- ontwerpberekening
	Nationale norm	EC - EN
	Auteur	- SMA

Laag	Naam	Doorsnede	Lengte [m]	Vorm	Beginknoop	Eindknoop	Type	EEM-type
Vak3	B26	CS68 - L150X100X12	9,452	Lijn	N59	N79	vakwerkdiagonaal (90)	standaard
Vak3	B22	CS68 - L150X100X12	9,452	Lijn	N62	N82	vakwerkdiagonaal (90)	standaard
Vak3	C10	CS113 - L200X26	6,648	Lijn	N61	N78	Kolom (100)	standaard
Vak3	C9	CS113 - L200X26	6,648	Lijn	N59	N76	Kolom (100)	standaard
Vak3	C12	CS113 - L200X26	6,648	Lijn	N65	N82	Kolom (100)	standaard
Vak3	C11	CS113 - L200X26	6,648	Lijn	N62	N79	Kolom (100)	standaard
Vak3	SB84	CS67 - L55X6	1,676	Lijn	N101	N100	vertikaal windverband (0)	standaard
Vak3	SB85	CS66 - L55X6	2,360	Lijn	K705	N102	vertikaal windverband (0)	standaard
Vak3	SB82	CS67 - L55X6	1,676	Lijn	N100	N99	vertikaal windverband (0)	standaard
Vak3	SB83	CS66 - L55X6	2,360	Lijn	K707	N101	vertikaal windverband (0)	standaard
Vak3	SB86	CS67 - L55X6	1,676	Lijn	N33	N102	vertikaal windverband (0)	standaard
Vak3	SB89	CS66 - L55X6	2,360	Lijn	K708	N104	vertikaal windverband (0)	standaard
Vak3	SB90	CS67 - L55X6	1,676	Lijn	N105	N104	vertikaal windverband (0)	standaard
Vak3	SB87	CS66 - L55X6	2,360	Lijn	K705	N103	vertikaal windverband (0)	standaard
Vak3	SB88	CS67 - L55X6	1,676	Lijn	N103	N33	vertikaal windverband (0)	standaard
Vak3	SB75	CS66 - L55X6	2,356	Lijn	N90	K705	vertikaal windverband (0)	standaard
Vak3	SB76	CS66 - L55X6	2,356	Lijn	N92	K705	vertikaal windverband (0)	standaard
Vak3	SB73	CS66 - L55X6	2,356	Lijn	N87	K707	vertikaal windverband (0)	standaard
Vak3	SB74	CS66 - L55X6	2,356	Lijn	N89	K707	vertikaal windverband (0)	standaard
Vak3	SB77	CS66 - L55X6	2,356	Lijn	N93	K708	vertikaal windverband (0)	standaard
Vak3	SB80	CS66 - L55X6	2,356	Lijn	N98	K711	vertikaal windverband (0)	standaard
Vak3	SB81	CS66 - L55X6	2,360	Lijn	K707	N99	vertikaal windverband (0)	standaard
Vak3	SB78	CS66 - L55X6	2,356	Lijn	N95	K708	vertikaal windverband (0)	standaard
Vak3	SB79	CS66 - L55X6	2,356	Lijn	N96	K711	vertikaal windverband (0)	standaard
Vak3	SB71	CS67 - L55X6	1,676	Lijn	N97	N96	vertikaal windverband (0)	standaard
Vak3	SB70	CS67 - L55X6	1,676	Lijn	N95	N94	vertikaal windverband (0)	standaard
Vak3	B76	CS68 - L150X100X12	9,452	Lijn	N59	N78	vakwerkdiagonaal (90)	standaard
Vak3	SB72	CS67 - L55X6	1,676	Lijn	N98	N97	vertikaal windverband (0)	standaard
Vak3	SB69	CS67 - L55X6	1,676	Lijn	N94	N93	vertikaal windverband (0)	standaard
Vak3	SB66	CS67 - L55X6	1,676	Lijn	N89	N88	vertikaal windverband (0)	standaard
Vak3	SB65	CS67 - L55X6	1,676	Lijn	N88	N87	vertikaal windverband (0)	standaard
Vak3	SB68	CS67 - L55X6	1,676	Lijn	N92	N91	vertikaal windverband (0)	standaard
Vak3	SB67	CS67 - L55X6	1,676	Lijn	N91	N90	vertikaal windverband (0)	standaard
Vak3	SB93	CS66 - L55X6	2,360	Lijn	K711	N38	vertikaal windverband (0)	standaard
Vak3	SB94	CS67 - L55X6	1,676	Lijn	N107	N38	vertikaal windverband (0)	standaard
Vak3	SB91	CS66 - L55X6	2,360	Lijn	K708	N106	vertikaal windverband (0)	standaard
Vak3	SB92	CS67 - L55X6	1,676	Lijn	N106	N105	vertikaal windverband (0)	standaard
Vak3	SB95	CS66 - L55X6	2,360	Lijn	K711	N108	vertikaal windverband (0)	standaard
Vak3	B74	CS68 - L150X100X12	9,452	Lijn	N65	N79	vakwerkdiagonaal (90)	standaard
Vak3	B75	CS68 - L150X100X12	9,452	Lijn	N62	N76	vakwerkdiagonaal (90)	standaard
Vak3	SB96	CS67 - L55X6	1,676	Lijn	N108	N107	vertikaal windverband (0)	standaard
Vak3	B73	CS68 - L150X100X12	9,452	Lijn	N61	N82	vakwerkdiagonaal (90)	standaard
Vak4	B111	CS81 - L60X6	2,920	Lijn	N123	N149	vertikaal windverband (0)	standaard
Vak4	B110	CS81 - L60X6	2,920	Lijn	N122	N152	vertikaal windverband (0)	standaard
Vak4	B113	CS81 - L60X6	2,920	Lijn	N121	N151	vertikaal windverband (0)	standaard
Vak4	B112	CS81 - L60X6	2,920	Lijn	N124	N150	vertikaal windverband (0)	standaard
Vak4	SB114	CS69 - L50X5	1,460	Lijn	N138	N137	vertikaal windverband (0)	standaard
Vak4	SB113	CS71 - L50X5	2,190	Lijn	N122	N137	vertikaal windverband (0)	standaard
Vak4	SB115	CS71 - L50X5	2,190	Lijn	N122	N139	vertikaal windverband (0)	standaard
Vak4	SB117	CS71 - L50X5	2,190	Lijn	N123	N140	vertikaal windverband (0)	standaard
Vak4	SB116	CS69 - L50X5	1,460	Lijn	N139	N138	vertikaal windverband (0)	standaard
Vak4	SB112	CS71 - L50X5	2,231	Lijn	N136	N121	vertikaal windverband (0)	standaard
Vak4	SB108	CS71 - L50X5	2,231	Lijn	N130	N123	vertikaal windverband (0)	standaard
Vak4	SB107	CS71 - L50X5	2,231	Lijn	N128	N123	vertikaal windverband (0)	standaard
Vak4	SB109	CS71 - L50X5	2,231	Lijn	N131	N124	vertikaal windverband (0)	standaard
Vak4	SB111	CS71 - L50X5	2,231	Lijn	N134	N121	vertikaal windverband (0)	standaard
Vak4	SB110	CS71 - L50X5	2,231	Lijn	N133	N124	vertikaal windverband (0)	standaard
Vak4	SB125	CS71 - L50X5	2,190	Lijn	N121	N146	vertikaal windverband (0)	standaard
Vak4	SB124	CS69 - L50X5	1,460	Lijn	N145	N144	vertikaal windverband (0)	standaard
Vak4	SB126	CS69 - L50X5	1,460	Lijn	N147	N146	vertikaal windverband (0)	standaard
Vak4	SB128	CS69 - L50X5	1,460	Lijn	N148	N147	vertikaal windverband (0)	standaard
Vak4	SB127	CS71 - L50X5	2,190	Lijn	N121	N148	vertikaal windverband (0)	standaard
Vak4	SB123	CS71 - L50X5	2,190	Lijn	N124	N145	vertikaal windverband (0)	standaard
Vak4	SB119	CS71 - L50X5	2,190	Lijn	N123	N142	vertikaal windverband (0)	standaard
Vak4	SB118	CS69 - L50X5	1,460	Lijn	N141	N140	vertikaal windverband (0)	standaard
Vak4	SB120	CS69 - L50X5	1,460	Lijn	N142	N141	vertikaal windverband (0)	standaard
Vak4	SB122	CS69 - L50X5	1,460	Lijn	N144	N143	vertikaal windverband (0)	standaard
Vak4	SB121	CS71 - L50X5	2,190	Lijn	N124	N143	vertikaal windverband (0)	standaard
Vak4	B101	CS70 - L150X100X14	8,859	Lijn	N76	N117	vakwerkdiagonaal (90)	standaard

D&C ENGINEERING	Project	- 150 kV lijn Leiden - Zoetermeer
	Onderdeel	- berekening Mast 55
	Omschrijving	- ontwerpberekening
	Nationale norm	EC - EN
	Auteur	- SMA

Laag	Naam	Doorsnede	Lengte [m]	Vorm	Beginknoop	Eindknoop	Type	EEM-type
Vak4	B100	CS70 - L150X100X14	8,860	Lijn	N79	N120	vakwerkdiagonaal (90)	standaard
Vak4	B102	CS81 - L60X6	2,920	Lijn	N152	N121	vertikaal windverband (0)	standaard
Vak4	B104	CS81 - L60X6	2,920	Lijn	N150	N123	vertikaal windverband (0)	standaard
Vak4	B103	CS81 - L60X6	2,920	Lijn	N149	N122	vertikaal windverband (0)	standaard
Vak4	B99	CS70 - L150X100X14	8,860	Lijn	N82	N116	vakwerkdiagonaal (90)	standaard
Vak4	C14	CS13 - L200X20	6,648	Lijn	N78	N116	Kolom (100)	standaard
Vak4	C13	CS13 - L200X20	6,648	Lijn	N76	N114	Kolom (100)	standaard
Vak4	C15	CS13 - L200X20	6,648	Lijn	N79	N117	Kolom (100)	standaard
Vak4	B98	CS70 - L150X100X14	8,859	Lijn	N78	N114	vakwerkdiagonaal (90)	standaard
Vak4	C16	CS13 - L200X20	6,648	Lijn	N82	N120	Kolom (100)	standaard
Vak4	SB103	CS69 - L50X5	1,460	Lijn	N135	N134	vertikaal windverband (0)	standaard
Vak4	SB102	CS69 - L50X5	1,460	Lijn	N133	N132	vertikaal windverband (0)	standaard
Vak4	SB104	CS69 - L50X5	1,460	Lijn	N136	N135	vertikaal windverband (0)	standaard
Vak4	SB106	CS71 - L50X5	2,231	Lijn	N127	N122	vertikaal windverband (0)	standaard
Vak4	SB105	CS71 - L50X5	2,231	Lijn	N125	N122	vertikaal windverband (0)	standaard
Vak4	SB101	CS69 - L50X5	1,460	Lijn	N132	N131	vertikaal windverband (0)	standaard
Vak4	SB97	CS69 - L50X5	1,460	Lijn	N126	N125	vertikaal windverband (0)	standaard
Vak4	B105	CS81 - L60X6	2,920	Lijn	N151	N124	vertikaal windverband (0)	standaard
Vak4	SB98	CS69 - L50X5	1,460	Lijn	N127	N126	vertikaal windverband (0)	standaard
Vak4	SB100	CS69 - L50X5	1,460	Lijn	N130	N129	vertikaal windverband (0)	standaard
Vak4	SB99	CS69 - L50X5	1,460	Lijn	N129	N128	vertikaal windverband (0)	standaard
Vak4	B107	CS70 - L150X100X14	8,859	Lijn	N82	N117	vakwerkdiagonaal (90)	standaard
Vak4	B106	CS70 - L150X100X14	8,859	Lijn	N78	N120	vakwerkdiagonaal (90)	standaard
Vak4	B109	CS70 - L150X100X14	8,860	Lijn	N76	N116	vakwerkdiagonaal (90)	standaard
Vak4	B108	CS70 - L150X100X14	8,860	Lijn	N79	N114	vakwerkdiagonaal (90)	standaard
Vak5	SB139	CS20 - L50X5	1,250	Lijn	N174	N173	vertikaal windverband (0)	standaard
Vak5	SB140	CS72 - L50X5	2,050	Lijn	N173	K91	vertikaal windverband (0)	standaard
Vak5	SB141	CS20 - L50X5	1,250	Lijn	N175	N174	vertikaal windverband (0)	standaard
Vak5	SB138	CS72 - L50X5	2,050	Lijn	N172	K112	vertikaal windverband (0)	standaard
Vak5	SB135	CS20 - L50X5	1,250	Lijn	N171	N170	vertikaal windverband (0)	standaard
Vak5	SB136	CS72 - L50X5	2,050	Lijn	N170	K112	vertikaal windverband (0)	standaard
Vak5	SB137	CS20 - L50X5	1,250	Lijn	N172	N171	vertikaal windverband (0)	standaard
Vak5	B37	CS73 - L150X100X12	4,360	Lijn	N120	K93	vakwerkdiagonaal (90)	standaard
Vak5	B38	CS73 - L150X100X12	4,360	Lijn	N120	K625	vakwerkdiagonaal (90)	standaard
Vak5	B39	CS73 - L150X100X12	4,360	Lijn	N117	K99	vakwerkdiagonaal (90)	standaard
Vak5	B36	CS73 - L150X100X12	4,360	Lijn	N116	K109	vakwerkdiagonaal (90)	standaard
Vak5	SB142	CS72 - L50X5	2,050	Lijn	N175	K91	vertikaal windverband (0)	standaard
Vak5	SB143	CS20 - L50X5	1,250	Lijn	N165	N176	vertikaal windverband (0)	standaard
Vak5	SB144	CS72 - L50X5	2,050	Lijn	N176	K102	vertikaal windverband (0)	standaard
Vak5	B114	CS73 - L150X100X12	4,360	Lijn	N114	K109	vakwerkdiagonaal (90)	standaard
Vak5	B115	CS73 - L150X100X12	4,360	Lijn	N116	K625	vakwerkdiagonaal (90)	standaard
Vak5	B116	CS73 - L150X100X12	4,360	Lijn	N117	K93	vakwerkdiagonaal (90)	standaard
Vak5	C20	CS112 - L200X20	3,414	Lijn	N120	K112	Kolom (100)	standaard
Vak5	C17	CS112 - L200X20	3,414	Lijn	N114	K102	Kolom (100)	standaard
Vak5	C18	CS112 - L200X20	3,414	Lijn	N116	N156	Kolom (100)	standaard
Vak5	C19	CS112 - L200X20	3,414	Lijn	N117	K91	Kolom (100)	standaard
Vak5	SB132	CS72 - L50X5	2,050	Lijn	N167	N156	vertikaal windverband (0)	standaard
Vak5	SB133	CS20 - L50X5	1,250	Lijn	N169	N168	vertikaal windverband (0)	standaard
Vak5	SB134	CS72 - L50X5	2,049	Lijn	N169	N156	vertikaal windverband (0)	standaard
Vak5	SB131	CS20 - L50X5	1,250	Lijn	N168	N167	vertikaal windverband (0)	standaard
Vak5	B117	CS73 - L150X100X12	4,360	Lijn	N114	K99	vakwerkdiagonaal (90)	standaard
Vak5	SB129	CS20 - L50X5	1,250	Lijn	N166	N165	vertikaal windverband (0)	standaard
Vak5	SB130	CS72 - L50X5	2,050	Lijn	N166	K102	vertikaal windverband (0)	standaard
Vak6	S336	CS84 - L90X9	2,076	Lijn	N156	K89	Kolom (100)	standaard
Vak6	S47	CS86 - L130X12	6,452	Polylijn	K104	K606	Balk (80)	standaard
Vak6	S355	CS82 - L200X16	2,140	Lijn	K90	K69	Kolom (100)	standaard
Vak6	S334	CS130 - L50X5	1,250	Lijn	K606	K605	Balk (80)	standaard
Vak6	S341	CS82 - L200X16	2,140	Lijn	K112	K111	Kolom (100)	standaard
Vak6	S49	CS84 - L90X9	2,076	Lijn	K91	K86	Kolom (100)	standaard
Vak6	S48	CS86 - L130X12	6,452	Polylijn	K111	K90	Balk (80)	standaard
Vak6	S365	CS82 - L200X16	2,140	Lijn	K104	K75	Kolom (100)	standaard
Vak6	S481	CS83 - L150X100X12	4,765	Lijn	K69	K99	Kolom (100)	standaard
Vak6	S249	CS85 - L50X5	2,571	Lijn	K112	K451	Kolom (100)	standaard
Vak6	S479	CS83 - L150X100X12	4,764	Lijn	K456	K625	Kolom (100)	standaard
Vak6	S480	CS83 - L150X100X12	4,765	Lijn	K75	K99	Kolom (100)	standaard
Vak6	S418	CS82 - L200X16	2,140	Lijn	K606	K456	Kolom (100)	standaard
Vak6	S333	CS85 - L50X5	2,571	Lijn	N156	K605	Kolom (100)	standaard
Vak6	S250	CS130 - L50X5	1,250	Lijn	K111	K451	Balk (80)	standaard
Vak6	S431	CS82 - L200X16	2,140	Lijn	K111	K628	Balk (80)	standaard

D&C ENGINEERING	Project	- 150 kV lijn Leiden - Zoetermeer
	Onderdeel	- berekening Mast 55
	Omschrijving	- ontwerpberekening
	Nationale norm	EC - EN
	Auteur	- SMA

Laag	Naam	Doorsnede	Lengte [m]	Vorm	Beginknoop	Eindknoop	Type	EEM-type
Vak6	S349	CS35 - L180X16	5,642	Polylijn	K109	K456	Balk (80)	standaard
Vak6	S347	CS35 - L180X16	5,642	Polylijn	K93	K628	Balk (80)	standaard
Vak6	S56	CS130 - L50X5	1,250	Lijn	K104	K103	Balk (80)	standaard
Vak6	S351	CS35 - L180X16	5,642	Polylijn	K109	K75	Balk (80)	standaard
Vak6	S176	CS82 - L200X16	2,140	Lijn	K91	K90	Kolom (100)	standaard
Vak6	S177	CS82 - L200X16	2,140	Lijn	K102	K104	Kolom (100)	standaard
Vak6	S61	CS84 - L90X9	2,076	Lijn	K112	K87	Kolom (100)	standaard
Vak6	S51	CS85 - L50X5	2,571	Lijn	K91	K95	Kolom (100)	standaard
Vak6	S52	CS130 - L50X5	1,250	Lijn	K90	K95	Balk (80)	standaard
Vak6	S342	CS82 - L200X16	2,140	Lijn	N156	K606	Kolom (100)	standaard
Vak6	S460	CS84 - L90X9	2,076	Lijn	K88	K102	Balk (80)	standaard
Vak6	S55	CS85 - L50X5	2,571	Lijn	K102	K103	Kolom (100)	standaard
Vak6	S405	CS83 - L150X100X12	4,765	Lijn	K628	K625	Kolom (100)	standaard
Vak6	S345	CS35 - L180X16	5,642	Polylijn	K93	K69	Balk (80)	standaard
Vak7	S397	CS92 - L50X5	2,227	Lijn	K626	K72	Balk (80)	standaard
Vak7	S398	CS82 - L200X16	2,119	Lijn	K626	K71	Balk (80)	standaard
Vak7	S458	CS92 - L50X5	2,231	Lijn	K307	K77	Balk (80)	standaard
Vak7	S454	CS90 - L150X100X12	4,017	Polylijn	K69	K291	Balk (80)	standaard
Vak7	S453	CS4 - L50X5	0,864	Lijn	K71	K630	Balk (80)	standaard
Vak7	S459	CS92 - L50X5	2,231	Lijn	K291	K71	Balk (80)	standaard
Vak7	S356	CS82 - L200X16	2,141	Lijn	K69	K71	Kolom (100)	standaard
Vak7	S366	CS82 - L200X16	2,141	Lijn	K75	K77	Kolom (100)	standaard
Vak7	S54	CS37 - L75X8	4,252	Lijn	K75	K69	Balk (80)	standaard
Vak7	S451	CS90 - L150X100X12	4,017	Lijn	K75	K307	Balk (80)	standaard
Vak7	S367	CS82 - L200X16	2,119	Lijn	K77	K63	Kolom (100)	standaard
Vak7	S38	CS4 - L50X5	0,879	Lijn	K71	K72	Balk (80)	standaard
Vak7	S37	CS91 - L150X15	4,747	Lijn	K69	K70	Kolom (100)	standaard
Vak7	S450	CS4 - L50X5	0,864	Lijn	K77	K629	Balk (80)	standaard
Vak7	S42	CS92 - L50X5	2,227	Lijn	K78	K63	Kolom (100)	standaard
Vak7	S41	CS4 - L50X5	0,879	Lijn	K77	K78	Balk (80)	standaard
Vak7	S40	CS91 - L150X15	4,747	Lijn	K75	K70	Kolom (100)	standaard
Vak8	S44	CS92 - L50X5	2,231	Lijn	K81	K83	Kolom (100)	standaard
Vak8	S252	CS91 - L150X15	4,747	Lijn	K456	K447	Kolom (100)	standaard
Vak8	S260	CS4 - L50X5	0,879	Lijn	K469	K470	Balk (80)	standaard
Vak8	S247	CS4 - L50X5	0,878	Lijn	K81	K448	Balk (80)	standaard
Vak8	S248	CS92 - L50X5	2,227	Lijn	K448	K301	Kolom (100)	standaard
Vak8	S301	CS92 - L50X5	2,227	Lijn	K470	K444	Kolom (100)	standaard
Vak8	S332	CS90 - L150X100X12	4,017	Lijn	K456	K438	Kolom (100)	standaard
Vak8	S43	CS4 - L50X5	0,864	Lijn	K81	K82	Balk (80)	standaard
Vak8	S330	CS4 - L50X5	0,864	Lijn	K469	K601	Balk (80)	standaard
Vak8	S331	CS92 - L50X5	2,231	Lijn	K469	K438	Kolom (100)	standaard
Vak8	S408	CS82 - L200X16	2,119	Lijn	K81	K301	Kolom (100)	standaard
Vak8	S433	CS90 - L150X100X12	4,017	Polylijn	K628	K83	Balk (80)	standaard
Vak8	S435	CS91 - L150X15	4,747	Lijn	K628	K447	Balk (80)	standaard
Vak8	S432	CS82 - L200X16	2,141	Lijn	K628	K81	Balk (80)	standaard
Vak8	S420	CS82 - L200X16	2,119	Lijn	K469	K444	Kolom (100)	standaard
Vak8	S419	CS82 - L200X16	2,141	Lijn	K456	K469	Kolom (100)	standaard
Vak8	S430	CS37 - L75X8	4,252	Lijn	K456	K628	Balk (80)	standaard
Vak9	S491	CS127 - L160X15	3,201	Lijn	K306	K408	Balk (80)	standaard
Vak9	S225	CS142 - L130X12	2,373	Lijn	K291	K409	Kolom (100)	standaard
Vak9	S265	CS143 - L90X9	2,456	Lijn	K473	K63	Balk (80)	standaard
Vak9	S400	CS143 - L90X9	2,456	Lijn	K626	K473	Balk (80)	standaard
Vak9	S266	CS143 - L90X9	2,542	Lijn	K404	K473	Balk (80)	standaard
Vak9	S240	CS142 - L130X12	2,373	Lijn	K307	K408	Kolom (100)	standaard
Vak9	S268	CS145 - L50X5	3,507	Lijn	K307	K291	Balk (80)	standaard
Vak9	S625	CS44 - UNP200	3,560	Polylijn	K626	K394	Balk (80)	standaard
Vak9	S612	CS44 - UNP200	3,560	Lijn	K404	K63	Balk (80)	standaard
Vak9	S488	CS127 - L160X15	3,202	Lijn	K294	K409	Balk (80)	standaard
Vak9	S263	CS143 - L90X9	2,542	Lijn	K394	K473	Balk (80)	standaard
Vak10	S34	CS93 - L90X9	2,366	Lijn	K63	K67	Kolom (100)	standaard
Vak10	S421	CS82 - L200X16	1,571	Lijn	K444	K459	Kolom (100)	standaard
Vak10	S258	CS126 - L160X15	0,888	Lijn	K598	K459	Balk (80)	standaard
Vak10	S257	CS125 - L60X6	3,232	Polylijn	K298	K459	Balk (80)	standaard
Vak10	S487	CS89 - L140X13	1,761	Lijn	K61	K620	Balk (80)	standaard
Vak10	S162	CS124 - UNP200	1,544	Lijn	K302	K301	Kolom (100)	standaard
Vak10	S164	CS124 - UNP200	1,544	Lijn	K306	K63	Kolom (100)	standaard
Vak10	S166	CS126 - L160X15	0,888	Lijn	K306	K65	Balk (80)	standaard
Vak10	S156	CS93 - L90X9	2,264	Lijn	K546	K621	Kolom (100)	standaard
Vak10	S159	CS126 - L160X15	0,888	Lijn	K294	K61	Balk (80)	standaard

D&C ENGINEERING	Project	- 150 kV lijn Leiden - Zoetermeer
	Onderdeel	- berekening Mast 55
	Omschrijving	- ontwerpberekening
	Nationale norm	EC - EN
	Auteur	- SMA

Laag	Naam	Doorsnede	Lengte [m]	Vorm	Beginknoop	Eindknoop	Type	EEM-type
Vak10	S160	CS126 - L160X15	0,888	Lijn	K302	K298	Balk (80)	standaard
Vak10	S457	CS124 - UNP200	1,544	Lijn	K626	K294	Balk (80)	standaard
Vak10	S243	CS93 - L90X9	2,366	Lijn	K301	K546	Kolom (100)	standaard
Vak10	S245	CS93 - L90X9	2,366	Lijn	K444	K546	Kolom (100)	standaard
Vak10	S422	CS89 - L140X13	1,761	Lijn	K459	K622	Kolom (100)	standaard
Vak10	S368	CS82 - L200X16	1,570	Lijn	K63	K65	Kolom (100)	standaard
Vak10	S36	CS93 - L90X9	2,265	Lijn	K67	K619	Kolom (100)	standaard
Vak10	S35	CS125 - L60X6	3,232	Polylijn	K65	K61	Balk (80)	standaard
Vak10	S409	CS82 - L200X16	1,571	Lijn	K301	K298	Kolom (100)	standaard
Vak10	S402	CS82 - L200X16	1,570	Lijn	K626	K61	Balk (80)	standaard
Vak10	S369	CS89 - L140X13	1,761	Lijn	K65	K619	Kolom (100)	standaard
Vak10	S328	CS124 - UNP200	1,544	Lijn	K444	K598	Kolom (100)	standaard
Vak10	S606	CS89 - L140X13	1,761	Lijn	K298	K783	Kolom (100)	standaard
Vak10	S381	CS122 - L130X12	4,236	Polylijn	K438	K622	Balk (80)	standaard
Vak10	S383	CS122 - L130X12	4,235	Polylijn	K83	K621	Balk (80)	standaard
Vak10	S379	CS122 - L130X12	4,235	Polylijn	K291	K620	Balk (80)	standaard
Vak10	S401	CS93 - L90X9	2,366	Lijn	K626	K67	Balk (80)	standaard
Vak10	S377	CS122 - L130X12	4,236	Polylijn	K307	K619	Balk (80)	standaard
Vak10	S31	CS93 - L90X9	2,265	Lijn	K67	K620	Kolom (100)	standaard
Vak10	S300	CS93 - L90X9	2,265	Lijn	K546	K622	Kolom (100)	standaard
Vak10	S298	CS36 - L100X10	3,507	Lijn	K301	K444	Balk (80)	standaard
Vak10	S598	CS36 - L100X10	3,507	Lijn	K626	K63	Balk (80)	standaard
Vak11	S30	CS129 - L50X5	2,536	Lijn	K55	K56	Balk (80)	standaard
Vak11	S456	CS129 - L50X5	2,179	Lijn	K55	K198	Balk (80)	standaard
Vak11	S359	CS89 - L140X13	2,220	Lijn	K620	K56	Kolom (100)	standaard
Vak11	S360	CS89 - L140X13	2,135	Lijn	K56	K388	Kolom (100)	standaard
Vak11	S29	CS96 - L110X10	2,651	Lijn	K619	K47	Kolom (100)	standaard
Vak11	S136	CS129 - L50X5	2,179	Lijn	K335	K56	Kolom (100)	standaard
Vak11	S140	CS128 - L150X100X10	4,099	Lijn	K620	K335	Kolom (100)	standaard
Vak11	S371	CS89 - L140X13	2,135	Lijn	K43	K55	Kolom (100)	standaard
Vak11	S133	CS129 - L50X5	0,799	Lijn	K243	K56	Balk (80)	standaard
Vak11	S134	CS129 - L50X5	0,800	Lijn	K245	K55	Balk (80)	standaard
Vak11	S135	CS128 - L150X100X10	4,098	Lijn	K619	K198	Kolom (100)	standaard
Vak11	S27	CS96 - L110X10	2,652	Lijn	K620	K47	Kolom (100)	standaard
Vak11	S370	CS89 - L140X13	2,220	Lijn	K55	K619	Kolom (100)	standaard
Vak11	S26	CS96 - L110X10	2,386	Lijn	K47	K388	Kolom (100)	standaard
Vak11	S28	CS96 - L110X10	2,386	Lijn	K47	K43	Kolom (100)	standaard
Vak12	S92	CS96 - L110X10	2,651	Lijn	K622	K162	Kolom (100)	standaard
Vak12	S90	CS96 - L110X10	2,652	Lijn	K621	K162	Kolom (100)	standaard
Vak12	S91	CS96 - L110X10	2,386	Lijn	K162	K158	Kolom (100)	standaard
Vak12	S93	CS129 - L50X5	2,536	Lijn	K170	K171	Balk (80)	standaard
Vak12	S154	CS128 - L150X100X10	4,099	Lijn	K621	K206	Kolom (100)	standaard
Vak12	S146	CS129 - L50X5	0,800	Lijn	K269	K171	Balk (80)	standaard
Vak12	S424	CS89 - L140X13	2,135	Lijn	K170	K158	Kolom (100)	standaard
Vak12	S411	CS89 - L140X13	2,221	Lijn	K171	K621	Kolom (100)	standaard
Vak12	S149	CS129 - L50X5	2,179	Lijn	K219	K170	Kolom (100)	standaard
Vak12	S147	CS129 - L50X5	0,800	Lijn	K271	K170	Balk (80)	standaard
Vak12	S607	CS89 - L140X13	2,221	Lijn	K170	K785	Kolom (100)	standaard
Vak12	S150	CS129 - L50X5	2,179	Lijn	K206	K171	Kolom (100)	standaard
Vak12	S89	CS96 - L110X10	2,386	Lijn	K162	K156	Kolom (100)	standaard
Vak12	S148	CS128 - L150X100X10	4,098	Lijn	K622	K219	Kolom (100)	standaard
Vak12	S412	CS89 - L140X13	2,135	Lijn	K156	K171	Kolom (100)	standaard
Vak13	S290	CS143 - L90X9	2,456	Lijn	K527	K444	Balk (80)	standaard
Vak13	S291	CS143 - L90X9	2,542	Lijn	K406	K527	Balk (80)	standaard
Vak13	S227	CS142 - L130X12	2,373	Lijn	K83	K411	Kolom (100)	standaard
Vak13	S620	CS127 - L160X15	3,202	Lijn	K410	K598	Balk (80)	standaard
Vak13	S319	CS143 - L90X9	2,542	Lijn	K396	K527	Balk (80)	standaard
Vak13	S321	CS145 - L50X5	3,507	Lijn	K83	K438	Balk (80)	standaard
Vak13	S242	CS142 - L130X12	2,373	Lijn	K438	K410	Kolom (100)	standaard
Vak13	S624	CS44 - UNP200	3,560	Lijn	K396	K301	Balk (80)	standaard
Vak13	S618	CS127 - L160X15	3,202	Lijn	K411	K302	Balk (80)	standaard
Vak13	S615	CS44 - UNP200	3,560	Lijn	K444	K406	Balk (80)	standaard
Vak13	S619	CS127 - L160X15	3,680	Lijn	K408	K410	Balk (80)	standaard
Vak13	S318	CS143 - L90X9	2,456	Lijn	K527	K301	Balk (80)	standaard
Vak14	S616	CS140 - L50X5	3,227	Lijn	K408	K409	Balk (80)	standaard
Vak14	S617	CS127 - L160X15	3,680	Lijn	K409	K411	Balk (80)	standaard
Vak14	S621	CS140 - L50X5	3,227	Lijn	K410	K411	Balk (80)	standaard
Vak14	S292	CS143 - L90X9	2,539	Lijn	K531	K406	Balk (80)	standaard
Vak14	S320	CS143 - L90X9	2,539	Lijn	K531	K396	Balk (80)	standaard

D&C ENGINEERING	Project	- 150 kV lijn Leiden - Zoetermeer
	Onderdeel	- berekening Mast 55
	Omschrijving	- ontwerpberekening
	Nationale norm	EC - EN
	Auteur	- SMA

Laag	Naam	Doorsnede	Lengte [m]	Vorm	Beginknoop	Eindknoop	Type	EEM-type
Vak14	S264	CS143 - L90X9	2,539	Lijn	K531	K394	Balk (80)	standaard
Vak14	S267	CS143 - L90X9	2,539	Lijn	K531	K404	Balk (80)	standaard
Vak14	S464	CS141 - L65X50X5	1,503	Lijn	K404	K408	Balk (80)	standaard
Vak14	S463	CS141 - L65X50X5	1,503	Lijn	K409	K394	Balk (80)	standaard
Vak14	S324	CS144 - HEB200	3,507	Lijn	K414	K434	Balk (80)	standaard
Vak14	S547	CS44 - UNP200	3,674	Lijn	K406	K404	Balk (80)	standaard
Vak14	S219	CS140 - L50X5	2,305	Lijn	K404	K395	Kolom (100)	standaard
Vak14	S220	CS140 - L50X5	2,305	Lijn	K406	K397	Kolom (100)	standaard
Vak14	S214	CS140 - L50X5	2,305	Lijn	K394	K395	Kolom (100)	standaard
Vak14	S215	CS140 - L50X5	2,305	Lijn	K396	K397	Kolom (100)	standaard
Vak14	S239	CS142 - L130X12	2,376	Lijn	K408	K434	Kolom (100)	standaard
Vak14	S241	CS142 - L130X12	2,376	Lijn	K410	K434	Kolom (100)	standaard
Vak14	S224	CS142 - L130X12	2,376	Lijn	K409	K414	Kolom (100)	standaard
Vak14	S226	CS142 - L130X12	2,376	Lijn	K411	K414	Kolom (100)	standaard
Vak14	S461	CS141 - L65X50X5	1,503	Lijn	K396	K411	Balk (80)	standaard
Vak14	S386	CS44 - UNP200	3,674	Lijn	K394	K396	Balk (80)	standaard
Vak14	S462	CS141 - L65X50X5	1,503	Lijn	K410	K406	Balk (80)	standaard
Vak15	S86	CS151 - L50X5	1,450	Lijn	K156	K130	Kolom (100)	standaard
Vak15	S199	CS148 - L60X6	2,672	Lijn	K206	K158	Balk (80)	standaard
Vak15	S211	CS4 - L50X5	2,163	Lijn	K158	K156	Balk (80)	standaard
Vak15	S155	CS158 - L90X9	1,506	Lijn	K219	K267	Kolom (100)	standaard
Vak15	S153	CS158 - L90X9	1,506	Lijn	K206	K261	Kolom (100)	standaard
Vak15	S151	CS156 - L60X6	1,213	Lijn	K267	K154	Balk (80)	standaard
Vak15	S198	CS148 - L60X6	2,672	Lijn	K219	K156	Balk (80)	standaard
Vak15	S97	CS152 - L50X5	1,849	Lijn	K206	K177	Kolom (100)	standaard
Vak15	S96	CS152 - L50X5	1,851	Lijn	K219	K177	Kolom (100)	standaard
Vak15	S87	CS151 - L50X5	1,451	Lijn	K158	K130	Kolom (100)	standaard
Vak15	S88	CS151 - L50X5	1,993	Lijn	K154	K144	Balk (80)	standaard
Vak15	S99	CS152 - L50X5	1,920	Lijn	K267	K261	Balk (80)	standaard
Vak15	S609	CS149 - UNP180	1,569	Lijn	K219	K158	Balk (80)	standaard
Vak15	S425	CS89 - L140X13	0,970	Lijn	K158	K154	Kolom (100)	standaard
Vak15	S413	CS89 - L140X13	0,970	Lijn	K144	K156	Kolom (100)	standaard
Vak15	S610	CS149 - UNP180	1,569	Lijn	K206	K156	Balk (80)	standaard
Vak15	S145	CS150 - L100X10	1,541	Lijn	K267	K158	Kolom (100)	standaard
Vak15	S144	CS150 - L100X10	1,541	Lijn	K261	K156	Kolom (100)	standaard
Vak15	S142	CS156 - L60X6	1,213	Lijn	K261	K144	Balk (80)	standaard
Vak16	S626	CS149 - UNP180	1,970	Lijn	K215	K219	Balk (80)	standaard
Vak16	S634	CS157 - L120X11	2,720	Lijn	K217	K267	Balk (80)	standaard
Vak16	S202	CS148 - L60X6	2,925	Lijn	K211	K219	Balk (80)	standaard
Vak16	S641	CS149 - UNP180	1,970	Lijn	K206	K211	Balk (80)	standaard
Vak16	S200	CS148 - L60X6	2,925	Lijn	K215	K206	Balk (80)	standaard
Vak16	S637	CS157 - L120X11	2,720	Lijn	K205	K261	Balk (80)	standaard
Vak16	S639	CS153 - L50X5	1,920	Lijn	K217	K205	Balk (80)	standaard
Vak16	S118	CS154 - L100X10	2,363	Lijn	K217	K219	Kolom (100)	standaard
Vak16	S115	CS153 - L50X5	1,306	Lijn	K211	K205	Kolom (100)	standaard
Vak16	S119	CS153 - L50X5	1,306	Lijn	K215	K217	Kolom (100)	standaard
Vak16	S114	CS153 - L50X5	1,691	Lijn	K211	K212	Kolom (100)	standaard
Vak16	S111	CS154 - L100X10	2,363	Lijn	K205	K206	Kolom (100)	standaard
Vak16	S116	CS153 - L50X5	1,691	Lijn	K215	K212	Kolom (100)	standaard
Vak17	S206	CS148 - L60X6	3,304	Lijn	K222	K224	Balk (80)	standaard
Vak17	S203	CS148 - L60X6	2,923	Lijn	K222	K211	Balk (80)	standaard
Vak17	S113	CS154 - L100X10	2,819	Lijn	N191	K207	Balk (80)	standaard
Vak17	S112	CS155 - L75X8	2,361	Lijn	K207	K205	Kolom (100)	standaard
Vak17	S629	CS149 - UNP180	4,465	Lijn	K227	K215	Balk (80)	standaard
Vak17	S207	CS148 - L60X6	3,304	Lijn	K227	K207	Balk (80)	standaard
Vak17	S209	CS146 - HEB180	2,163	Lijn	K222	K207	Balk (80)	standaard
Vak17	S636	CS157 - L120X11	4,465	Lijn	N191	K205	Balk (80)	standaard
Vak17	S642	CS149 - UNP180	4,465	Lijn	K211	K224	Balk (80)	standaard
Vak17	S126	CS154 - L100X10	2,819	Lijn	N192	K222	Balk (80)	standaard
Vak17	S201	CS148 - L60X6	2,923	Lijn	K207	K215	Balk (80)	standaard
Vak17	S633	CS157 - L120X11	4,465	Lijn	N192	K217	Balk (80)	standaard
Vak17	S120	CS155 - L75X8	2,361	Lijn	K222	K217	Kolom (100)	standaard
Vak18	S125	CS153 - L50X5	1,306	Lijn	N192	K227	Kolom (100)	standaard
Vak18	S123	CS153 - L50X5	1,691	Lijn	K227	K226	Kolom (100)	standaard
Vak18	S121	CS153 - L50X5	1,306	Lijn	N191	K224	Kolom (100)	standaard
Vak18	S122	CS153 - L50X5	1,691	Lijn	K224	K226	Kolom (100)	standaard
Vak18	S179	CS148 - L60X6	3,304	Lijn	K227	K186	Balk (80)	standaard
Vak18	S189	CS146 - HEB180	2,163	Lijn	K201	K186	Balk (80)	standaard
Vak18	S638	CS153 - L50X5	1,920	Lijn	N192	N191	Balk (80)	standaard

D&C ENGINEERING	Project	- 150 kV lijn Leiden - Zoetermeer
	Onderdeel	- berekening Mast 55
	Omschrijving	- ontwerpberekening
	Nationale norm	EC - EN
	Auteur	- SMA

Laag	Naam	Doorsnede	Lengte [m]	Vorm	Beginknoop	Eindknoop	Type	EEM-type
Vak18	S101	CS155 - L75X8	2,361	Lijn	K186	K623	Kolom (100)	standaard
Vak18	S185	CS148 - L60X6	2,923	Lijn	K201	K787	Balk (80)	standaard
Vak18	S640	CS149 - UNP180	4,465	Lijn	K224	K787	Balk (80)	standaard
Vak18	S183	CS148 - L60X6	2,923	Lijn	K186	K194	Balk (80)	standaard
Vak18	S178	CS148 - L60X6	3,304	Lijn	K201	K224	Balk (80)	standaard
Vak18	S110	CS154 - L100X10	2,819	Lijn	N192	K201	Balk (80)	standaard
Vak18	S109	CS155 - L75X8	2,361	Lijn	K201	K627	Kolom (100)	standaard
Vak18	S628	CS149 - UNP180	4,465	Lijn	K194	K227	Balk (80)	standaard
Vak18	S635	CS157 - L120X11	4,464	Lijn	K623	N191	Balk (80)	standaard
Vak18	S102	CS154 - L100X10	2,818	Lijn	N191	K186	Balk (80)	standaard
Vak18	S632	CS157 - L120X11	4,465	Lijn	K627	N192	Balk (80)	standaard
Vak19	S608	CS149 - UNP180	1,970	Lijn	K198	K194	Balk (80)	standaard
Vak19	S631	CS153 - L50X5	1,920	Lijn	K627	K623	Balk (80)	standaard
Vak19	S182	CS148 - L60X6	2,926	Lijn	K194	K335	Balk (80)	standaard
Vak19	S445	CS149 - UNP180	1,970	Lijn	K787	K335	Balk (80)	standaard
Vak19	S107	CS154 - L100X10	2,364	Lijn	K627	K198	Kolom (100)	standaard
Vak19	S105	CS153 - L50X5	1,691	Lijn	K194	K191	Kolom (100)	standaard
Vak19	S503	CS157 - L120X11	2,720	Lijn	K235	K627	Balk (80)	standaard
Vak19	S108	CS153 - L50X5	1,306	Lijn	K194	K627	Kolom (100)	standaard
Vak19	S100	CS154 - L100X10	2,364	Lijn	K623	K335	Kolom (100)	standaard
Vak19	S184	CS148 - L60X6	2,925	Lijn	K787	K198	Balk (80)	standaard
Vak19	S104	CS153 - L50X5	1,306	Lijn	K787	K623	Kolom (100)	standaard
Vak19	S103	CS153 - L50X5	1,691	Lijn	K787	K191	Kolom (100)	standaard
Vak19	S501	CS157 - L120X11	2,721	Lijn	K233	K623	Balk (80)	standaard
Vak20	S23	CS151 - L50X5	1,450	Lijn	K388	K15	Kolom (100)	standaard
Vak20	S139	CS158 - L90X9	1,506	Lijn	K335	K233	Kolom (100)	standaard
Vak20	S137	CS156 - L60X6	1,213	Lijn	K235	K39	Balk (80)	standaard
Vak20	S24	CS151 - L50X5	1,451	Lijn	K43	K15	Kolom (100)	standaard
Vak20	S98	CS152 - L50X5	1,920	Lijn	K235	K233	Balk (80)	standaard
Vak20	S141	CS158 - L90X9	1,506	Lijn	K198	K235	Kolom (100)	standaard
Vak20	S95	CS152 - L50X5	1,849	Lijn	K335	K173	Kolom (100)	standaard
Vak20	S497	CS149 - UNP180	1,568	Lijn	K43	K198	Balk (80)	standaard
Vak20	S94	CS152 - L50X5	1,851	Lijn	K198	K173	Kolom (100)	standaard
Vak20	S129	CS156 - L60X6	1,213	Lijn	K233	K29	Balk (80)	standaard
Vak20	S372	CS89 - L140X13	0,970	Lijn	K39	K43	Kolom (100)	standaard
Vak20	S361	CS89 - L140X13	0,970	Lijn	K388	K29	Kolom (100)	standaard
Vak20	S181	CS148 - L60X6	2,671	Lijn	K335	K43	Balk (80)	standaard
Vak20	S180	CS148 - L60X6	2,672	Lijn	K198	K388	Balk (80)	standaard
Vak20	S25	CS151 - L50X5	1,993	Lijn	K39	K29	Balk (80)	standaard
Vak20	S132	CS150 - L100X10	1,541	Lijn	K235	K43	Kolom (100)	standaard
Vak20	S131	CS150 - L100X10	1,541	Lijn	K233	K388	Kolom (100)	standaard
Vak20	S447	CS149 - UNP180	1,568	Lijn	K335	K388	Balk (80)	standaard
Vak20	S212	CS4 - L50X5	2,163	Lijn	K43	K388	Balk (80)	standaard

6. Staafnummers mastlichaam

6.1. Vak 1

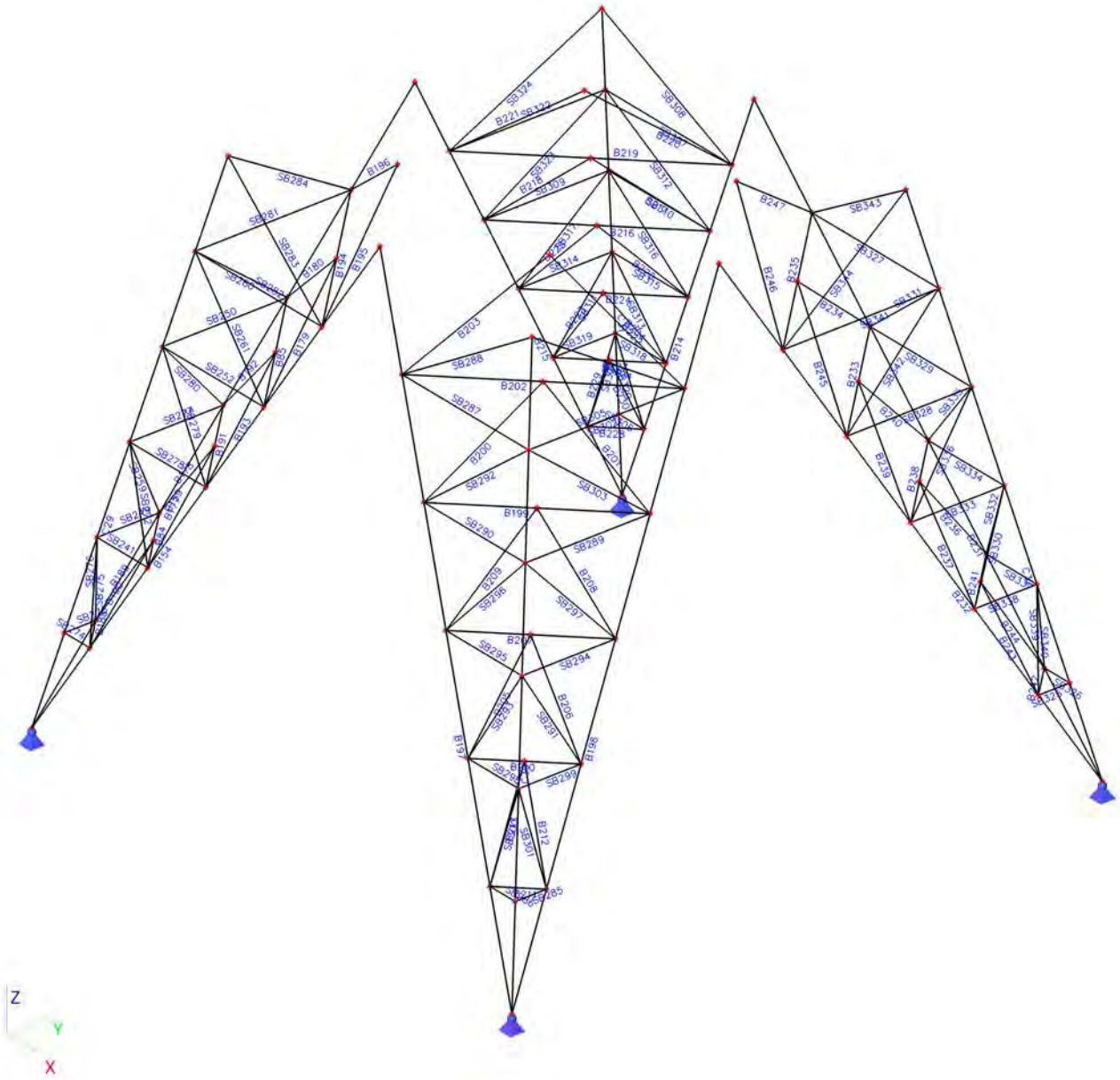

6.2. Vak 2+3

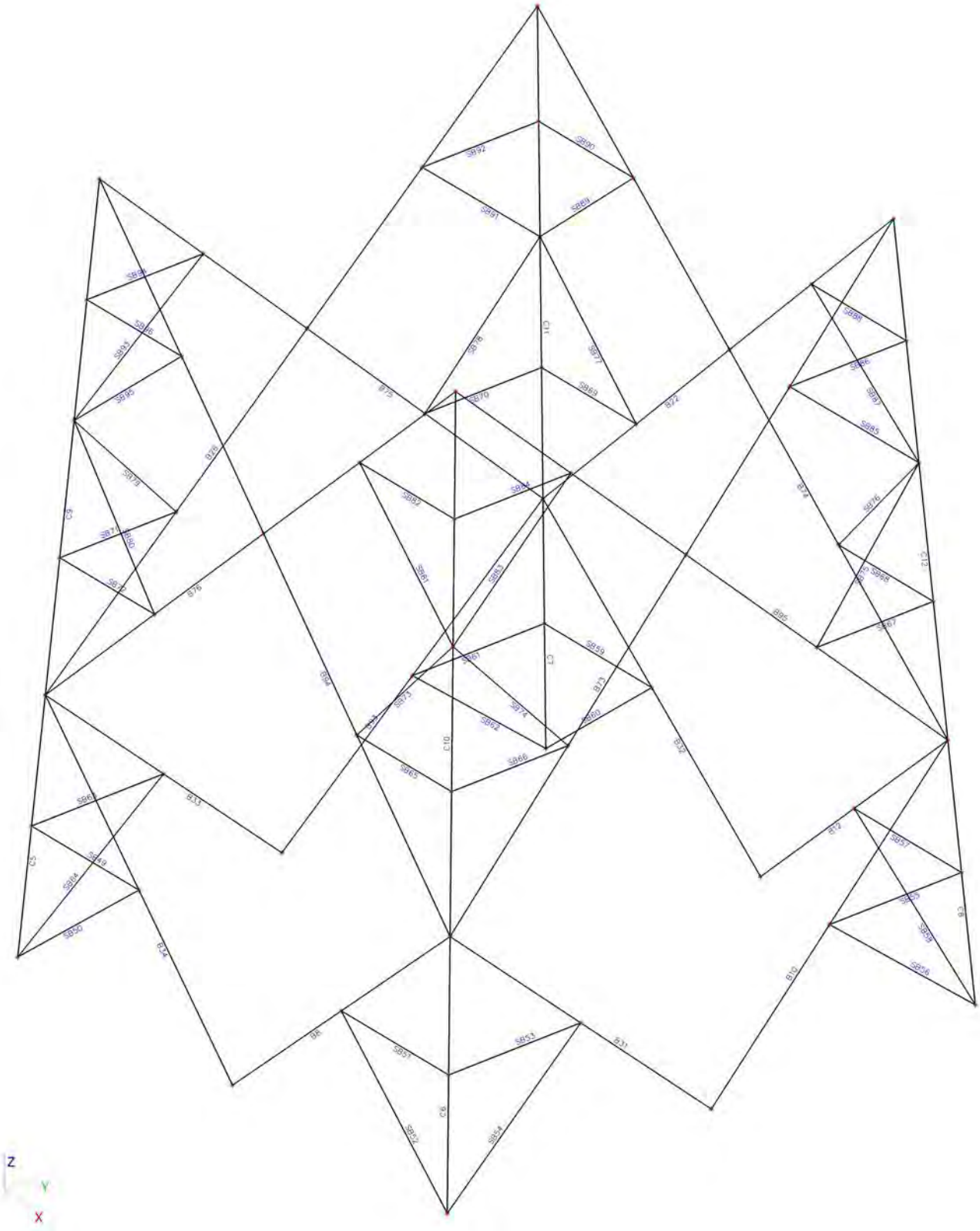

6.3. Vak 4+5

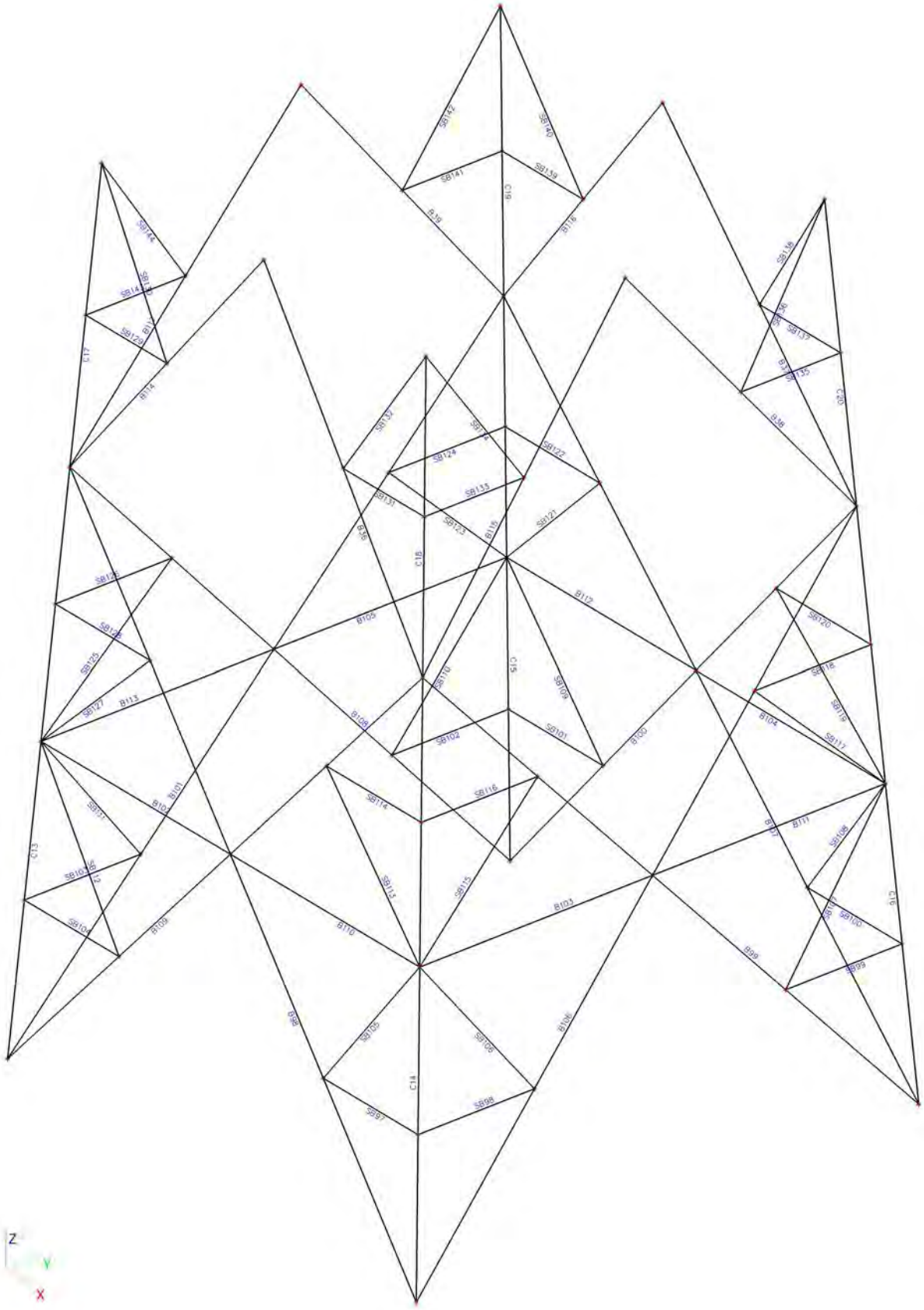

6.4. Vak 6

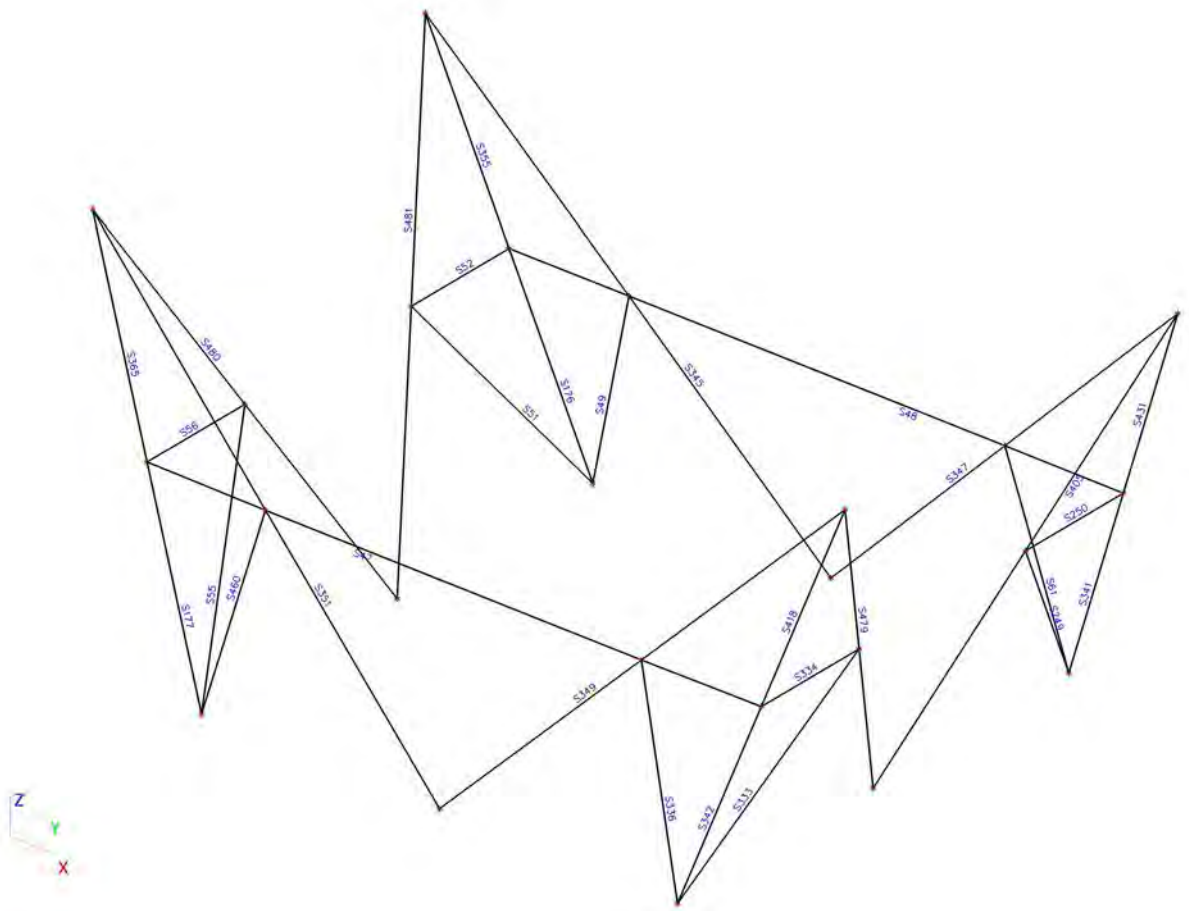
S355
S481
S52
S460
S365
S56
S176
S49
S51
S345
S48
S431
S347
S409
S250
S177
S55
S460
S351
S418
S479
S334
S149
S141
S336
S342
S131
Z
Y
X

6.5. Vak 7+8+9+10+13+14

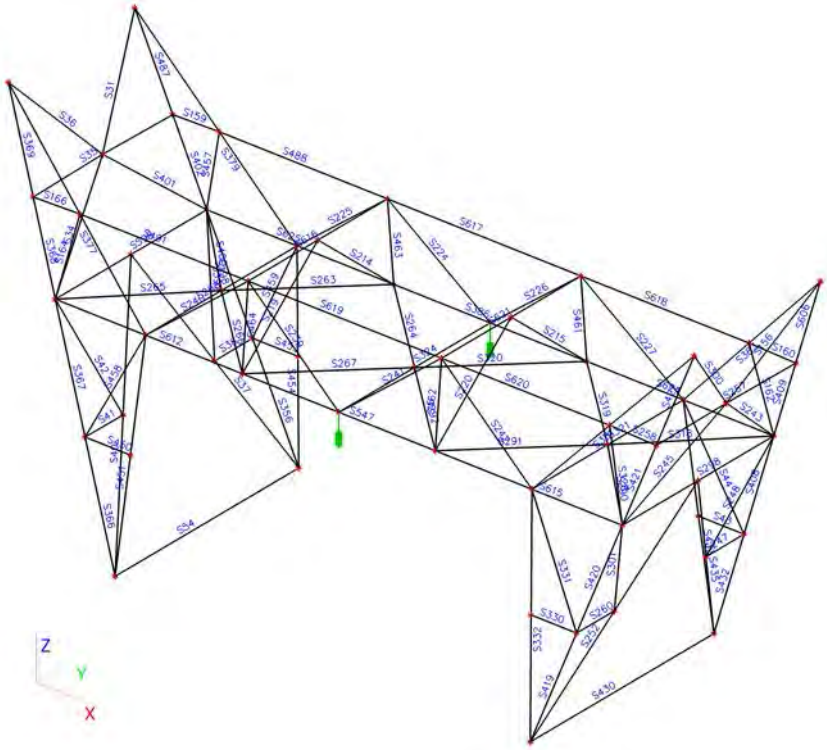

6.6. Vak 11+12+15 t/m 21

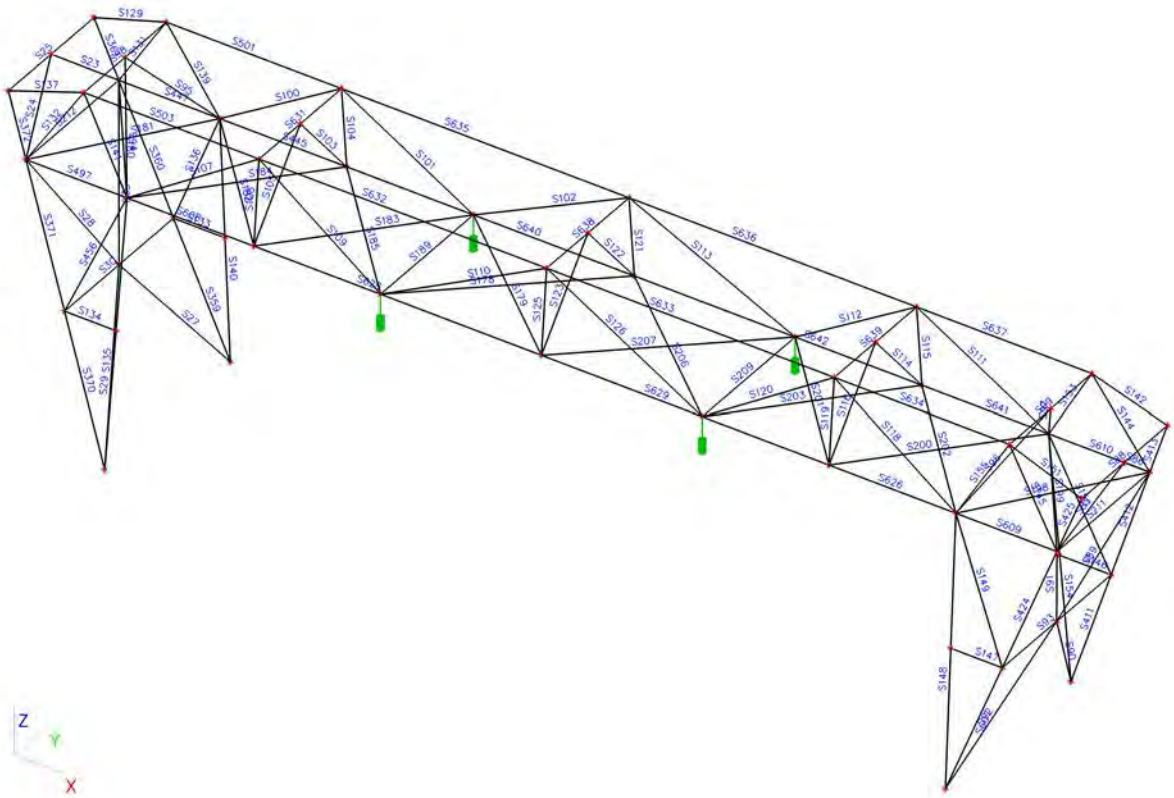

7. Staafnummers traverses

7.1. CrossArm1

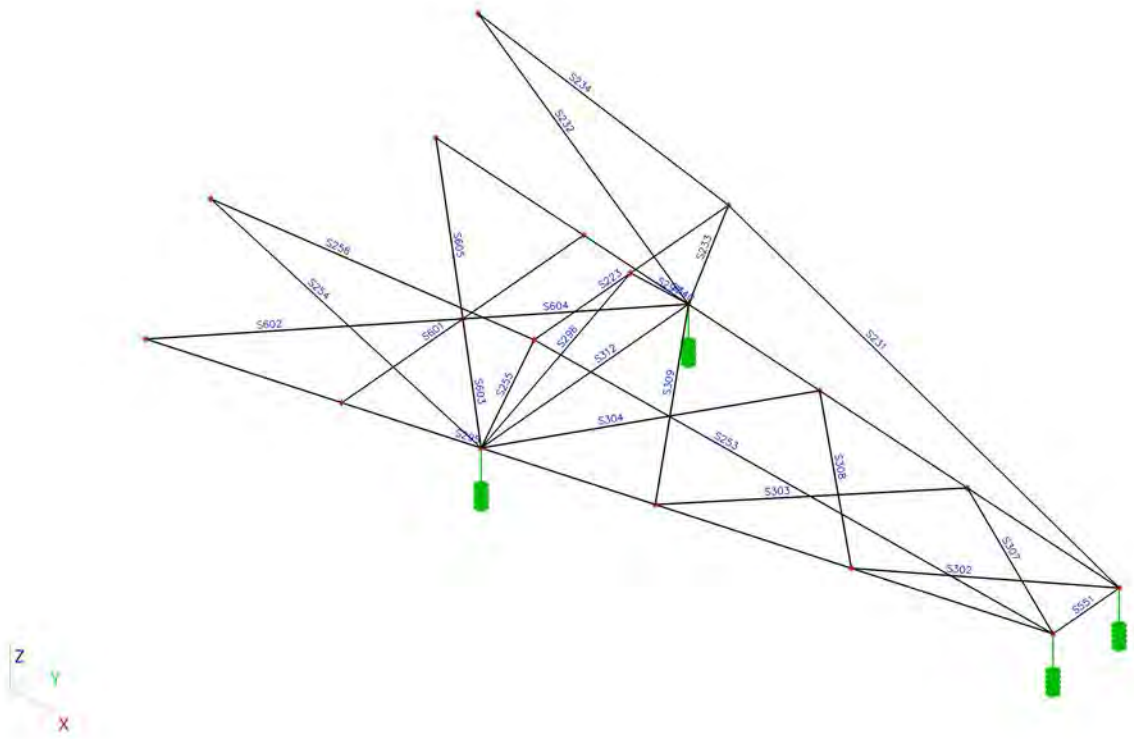

7.2. CrossArm2

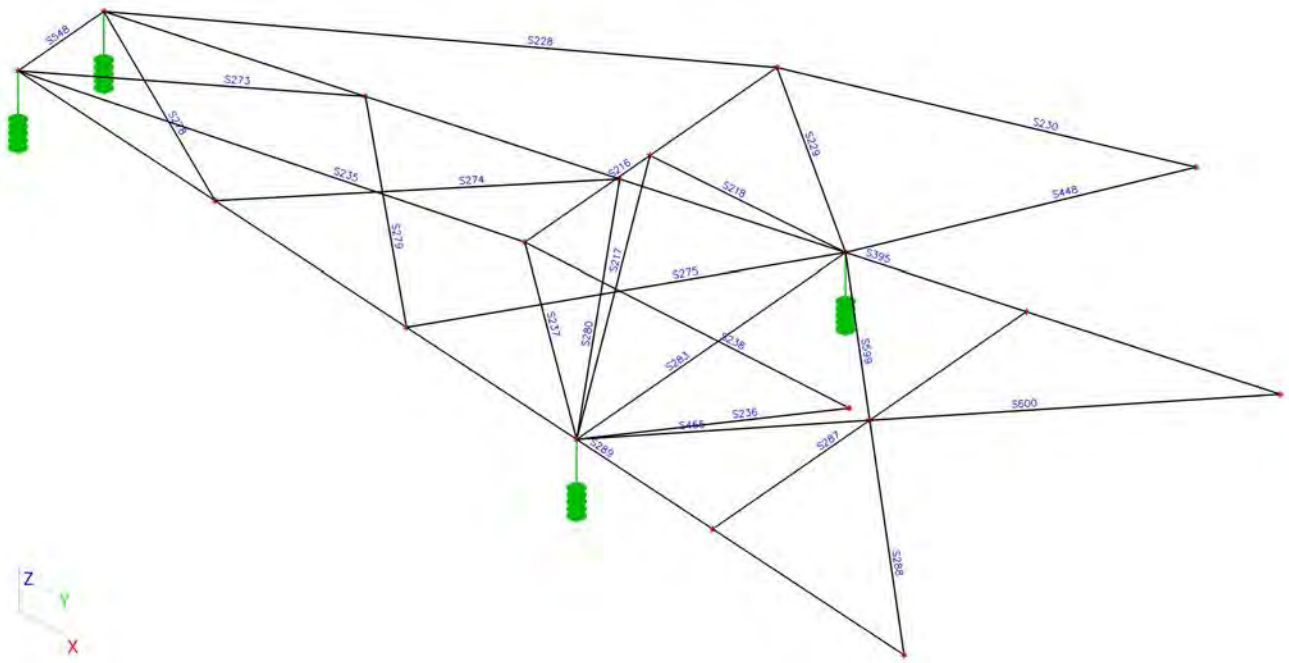

7.3. CrossArm3

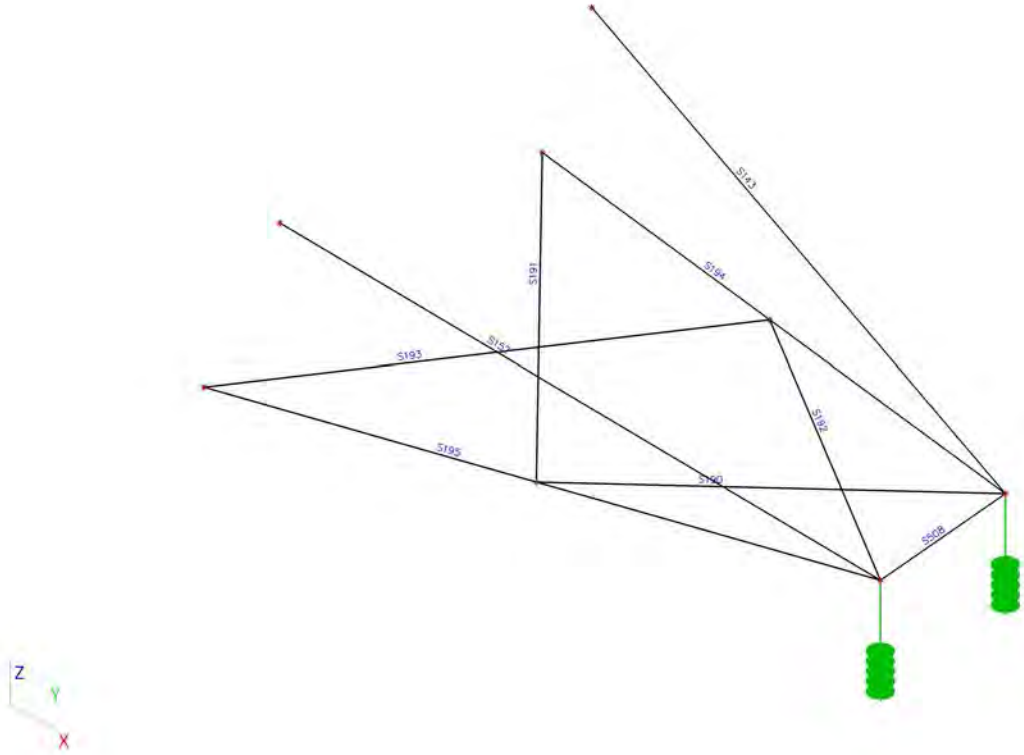

7.4. CrossArm4

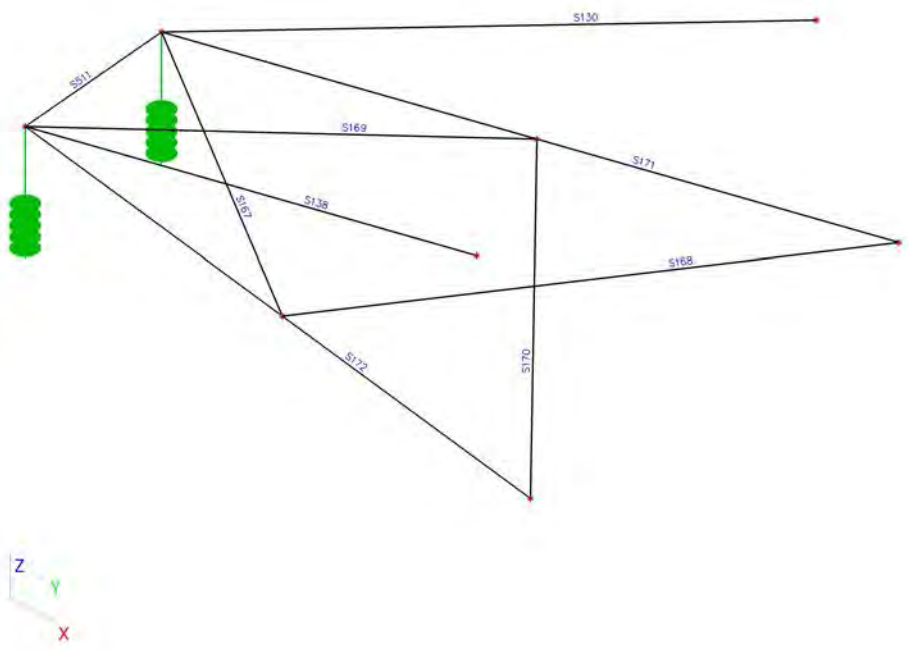

7.5. CrossArm5

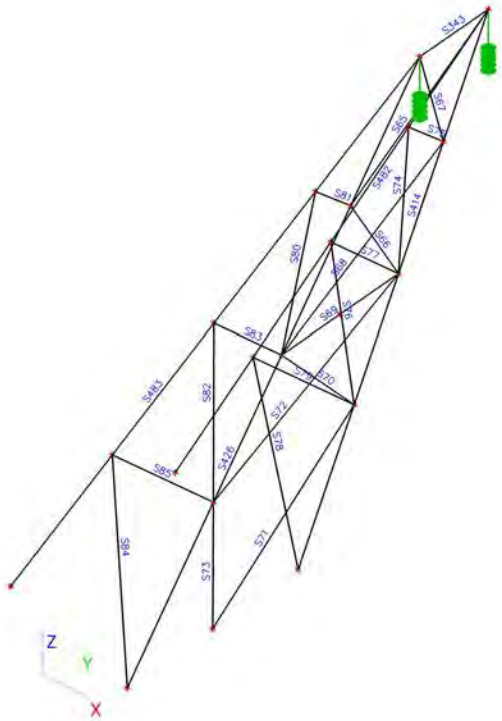

7.6. CrossArm6

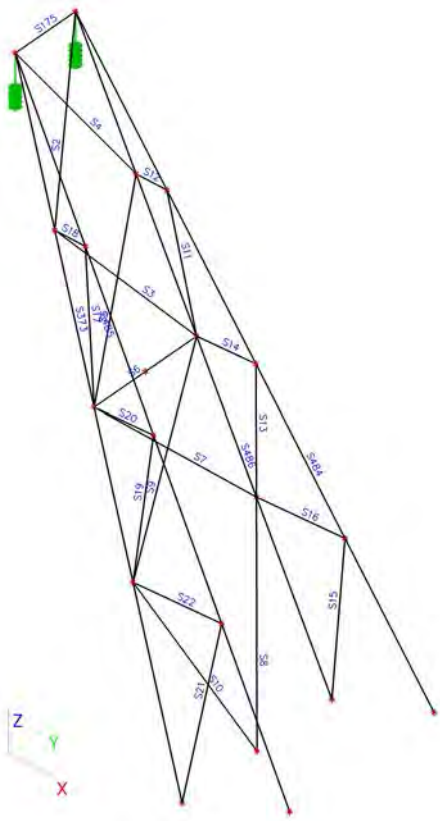

8. Staafnummers horizontale verbanden

8.1. Horizontaal verband 1

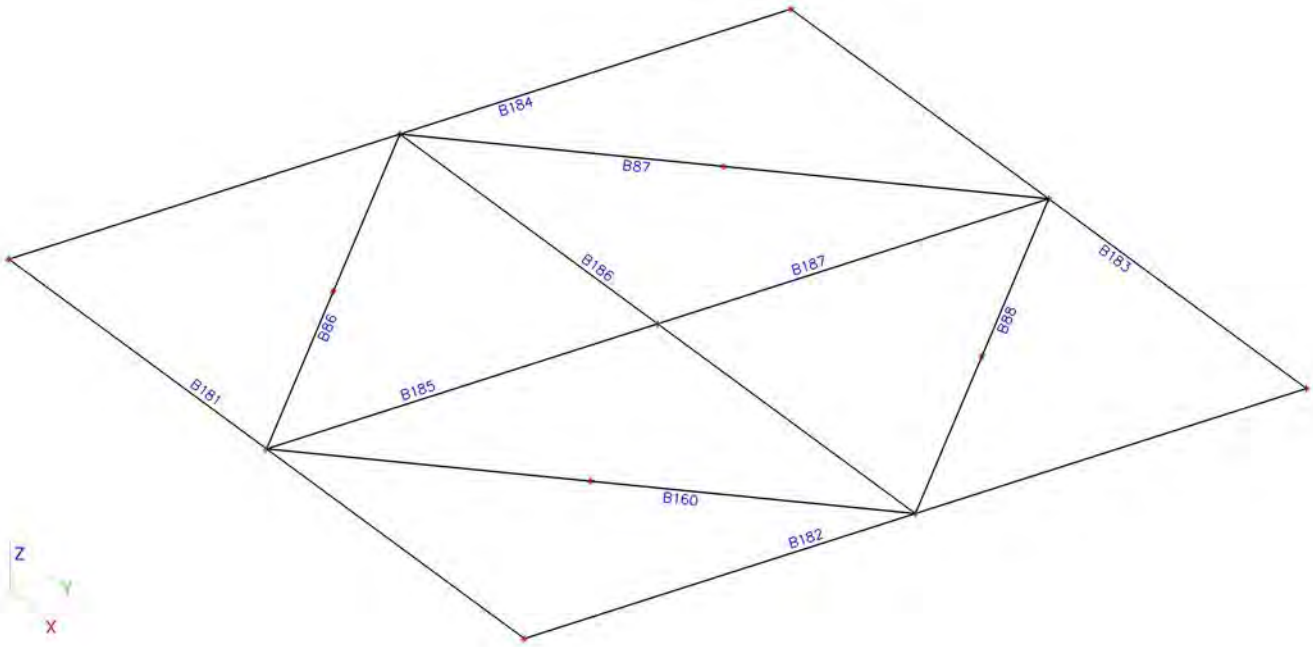

8.2. Horizontaal verband 2

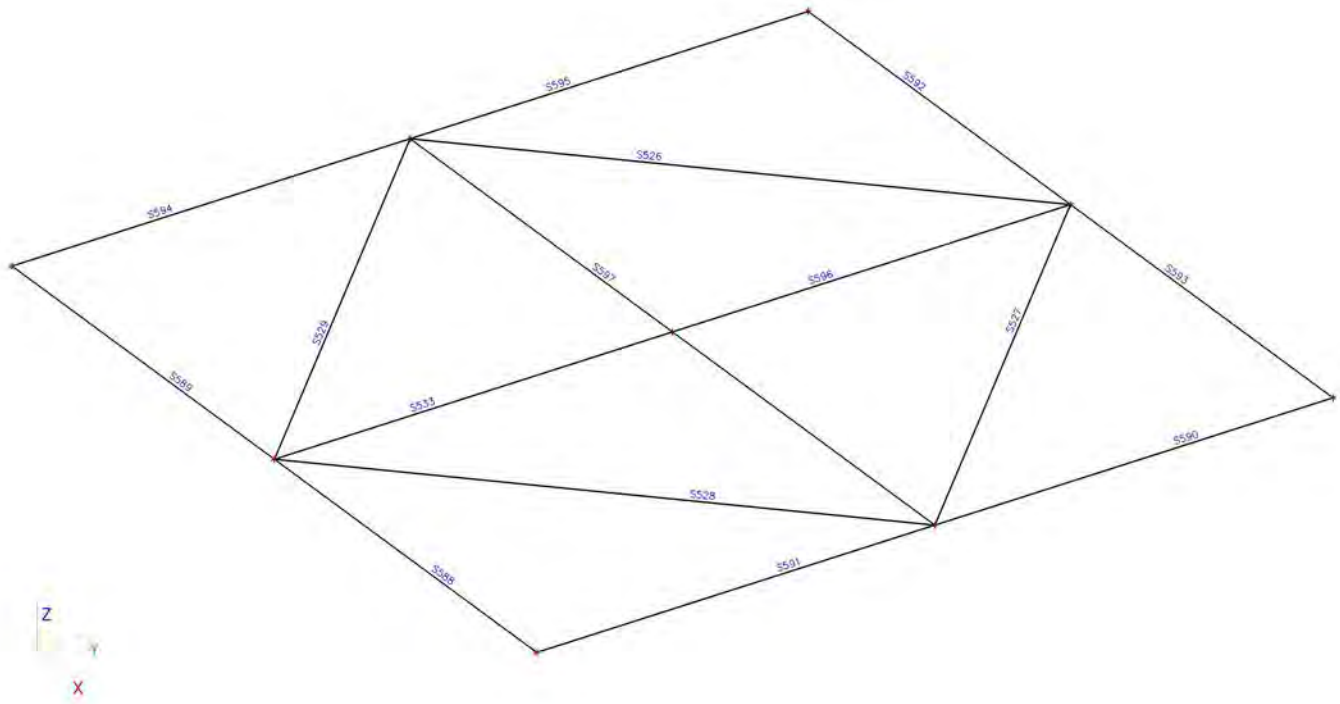

8.3. Horizontaal verband 3

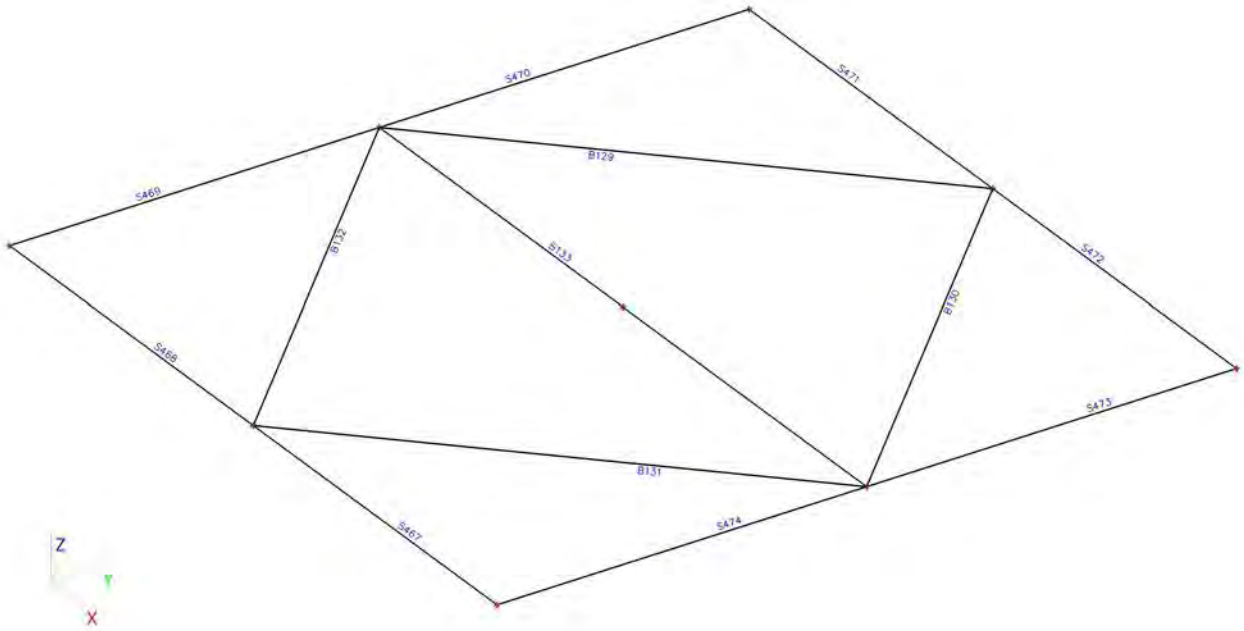

9. Belastingsgevallen

Naam	Omschrijving	Actie type	Lastgroep	Belastingtype	Spec	Richting	Duur	'Master' belastingsgeval
6T	self weight of tower	Permanent	Perm	Eigen gewicht		-Z		
6C	self weight of conductor	Permanent	Perm	Standaard				
W_x-y+	Wind	Variabel	LTA WIND	Statisch	Standaard		Kort	Geen
W_x+y-	Wind	Variabel	LTA WIND	Statisch	Standaard		Kort	Geen
W_x-y-	Wind	Variabel	LTA WIND	Statisch	Standaard		Kort	Geen
W_x+y+	Wind	Variabel	LTA WIND	Statisch	Standaard		Kort	Geen
W_y-	Wind	Variabel	LTA WIND	Statisch	Standaard		Kort	Geen
W_y+	Wind	Variabel	LTA WIND	Statisch	Standaard		Kort	Geen
W_x-	Wind	Variabel	LTA WIND	Statisch	Standaard		Kort	Geen
W_x+	Wind	Variabel	LTA WIND	Statisch	Standaard		Kort	Geen
WI_x+	WindIce	Variabel	WindIce	Statisch	Standaard		Kort	Geen
WI_x-	WindIce	Variabel	WindIce	Statisch	Standaard		Kort	Geen
WI_x+y+	WindIce	Variabel	WindIce	Statisch	Standaard		Kort	Geen
WI_x+y-	WindIce	Variabel	WindIce	Statisch	Standaard		Kort	Geen
WI_x-y+	WindIce	Variabel	WindIce	Statisch	Standaard		Kort	Geen
WI_x-y-	WindIce	Variabel	WindIce	Statisch	Standaard		Kort	Geen
WI_y-	WindIce	Variabel	WindIce	Statisch	Standaard		Kort	Geen
Ice	Ice	Variabel	Ice	Statisch	Standaard		Kort	Geen
4M	Maintenance	Variabel	Maint	Statisch	Onderhoudslasten			Geen
4C0	Construction	Variabel	Construction	Statisch	Standaard		Kort	Geen
4C1	Construction	Variabel	Construction	Statisch	Standaard		Kort	Geen
4C2	Construction	Variabel	Construction	Statisch	Standaard		Kort	Geen
4C3	Construction	Variabel	Construction	Statisch	Standaard		Kort	Geen
4C4	Construction	Variabel	Construction	Statisch	Standaard		Kort	Geen
4C5	Construction	Variabel	Construction	Statisch	Standaard		Kort	Geen
4C6	Construction	Variabel	Construction	Statisch	Standaard		Kort	Geen
4C7	Construction	Variabel	Construction	Statisch	Standaard		Kort	Geen
4C8	Construction	Variabel	Construction	Statisch	Standaard		Kort	Geen
4C9	Construction	Variabel	Construction	Statisch	Standaard		Kort	Geen
4C10	Construction	Variabel	Construction	Statisch	Standaard		Kort	Geen
4C11	Construction	Variabel	Construction	Statisch	Standaard		Kort	Geen
4C12	Construction	Variabel	Construction	Statisch	Standaard		Kort	Geen
4C13	Construction	Variabel	Construction	Statisch	Standaard		Kort	Geen
SBS	SBS-load	Variabel	SBS	Statisch	Knikverkorterlasten			Geen
Tuls-1a	Conductor tension	Permanent	CT	Standaard				
Tuls-1b	Conductor tension	Permanent	CT	Standaard				
Tuls-3	Conductor tension	Permanent	CT	Standaard				
Tuls-4	Conductor tension	Permanent	CT	Standaard				
Tuls-6	Conductor tension	Permanent	CT	Standaard				
Tsls-1a-LF	Conductor tension	Variabel	sls	Statisch	Standaard		Kort	Geen
Tsls-1b-LF	Conductor tension	Variabel	sls	Statisch	Standaard		Kort	Geen
Tsls-3-LF	Conductor tension	Variabel	sls	Statisch	Standaard		Kort	Geen
Tsls-4-LF	Conductor tension	Variabel	sls	Statisch	Standaard		Kort	Geen
Tsls-1a-LR	Conductor tension	Variabel	sls	Statisch	Standaard		Kort	Geen
Tsls-1b-LR	Conductor tension	Variabel	sls	Statisch	Standaard		Kort	Geen
Tsls-3-LR	Conductor tension	Variabel	sls	Statisch	Standaard		Kort	Geen
Tsls-4-LR	Conductor tension	Variabel	sls	Statisch	Standaard		Kort	Geen
Tsls-1a-RF	Conductor tension	Variabel	sls	Statisch	Standaard		Kort	Geen
Tsls-1b-RF	Conductor tension	Variabel	sls	Statisch	Standaard		Kort	Geen
Tsls-3-RF	Conductor tension	Variabel	sls	Statisch	Standaard		Kort	Geen
Tsls-4-RF	Conductor tension	Variabel	sls	Statisch	Standaard		Kort	Geen
Tsls-1a-RR	Conductor tension	Variabel	sls	Statisch	Standaard		Kort	Geen
Tsls-1b-RR	Conductor tension	Variabel	sls	Statisch	Standaard		Kort	Geen
Tsls-3-RR	Conductor tension	Variabel	sls	Statisch	Standaard		Kort	Geen
Tsls-4-RR	Conductor tension	Variabel	sls	Statisch	Standaard		Kort	Geen
Tuls-5a_CI1		Variabel	5a_CI1	Statisch	Standaard		Kort	Geen
Tuls-5a_CI2		Variabel	5a_CI2	Statisch	Standaard		Kort	Geen
Tuls-5a_CI3		Variabel	5a_CI3	Statisch	Standaard		Kort	Geen
Tuls-5a_CI4		Variabel	5a_CI4	Statisch	Standaard		Kort	Geen
Tuls-5a_CI5		Variabel	5a_CI5	Statisch	Standaard		Kort	Geen
Tuls-5a_CI6		Variabel	5a_CI6	Statisch	Standaard		Kort	Geen
Tuls-5a_CI7		Variabel	5a_CI7	Statisch	Standaard		Kort	Geen
Tuls-5a_CI8		Variabel	5a_CI8	Statisch	Standaard		Kort	Geen
Tuls-5a_CI9		Variabel	5a_CI9	Statisch	Standaard		Kort	Geen
Tuls-5a_CI10		Variabel	5a_CI10	Statisch	Standaard		Kort	Geen
Tuls-5a_CI11		Variabel	5a_CI11	Statisch	Standaard		Kort	Geen
Tuls-5a_CI12		Variabel	5a_CI12	Statisch	Standaard		Kort	Geen

Naam	Omschrijving	Actie type	Lastgroep	Belastingtype	Spec	Richting	Duur	'Master' belastingsgeval
Tuls-5a_Cl14		Variabel	5a_Cl14	Statisch	Standaard		Kort	Geen
Tuls-5a_Cl15		Variabel	5a_Cl15	Statisch	Standaard		Kort	Geen
Tuls-5a_Cl16		Variabel	5a_Cl16	Statisch	Standaard		Kort	Geen
Tuls-5a_Cl17		Variabel	5a_Cl17	Statisch	Standaard		Kort	Geen
Tuls-5a_Cl18		Variabel	5a_Cl18	Statisch	Standaard		Kort	Geen
Tuls-5a_Cl19		Variabel	5a_Cl19	Statisch	Standaard		Kort	Geen
Tuls-5a_Cl20		Variabel	5a_Cl20	Statisch	Standaard		Kort	Geen
Tuls-5a_Cl21		Variabel	5a_Cl21	Statisch	Standaard		Kort	Geen
Tuls-5a_Cl22		Variabel	5a_Cl22	Statisch	Standaard		Kort	Geen
WI_y+	WindIce	Variabel	WindIce	Statisch	Standaard		Kort	Geen
Tuls-5a_Cl13		Variabel	5a_Cl13	Statisch	Standaard		Kort	Geen

10. Combinaties

Naam	Omschrijving	Type	Belastingsgevallen	Coëff. [-]
1a	wind;10	Omhullende - uiterst	W_x-y+ - Wind	1,50
			W_x+y- - Wind	1,50
			W_x-y- - Wind	1,50
			W_x+y+ - Wind	1,50
			W_y- - Wind	1,50
			W_y+ - Wind	1,50
			W_x- - Wind	1,50
			W_x+ - Wind	1,50
			6T - self weight of tower	1,44
			6C - self weight of conductor	1,20
			Tuls-1a - Conductor tension	1,00
1b	wind;-20	Omhullende - uiterst	W_x-y+ - Wind	0,30
			W_x+y- - Wind	0,30
			W_x-y- - Wind	0,30
			W_x+y+ - Wind	0,30
			W_y- - Wind	0,30
			W_y+ - Wind	0,30
			W_x- - Wind	0,30
			W_x+ - Wind	0,30
			6T - self weight of tower	1,44
			6C - self weight of conductor	1,20
			Tuls-1a - Conductor tension	1,00
3	wind+ice	Omhullende - uiterst	Ice - Ice	1,50
			WI_x+ - WindIce	0,45
			WI_x- - WindIce	0,45
			WI_x+y+ - WindIce	0,45
			WI_x+y- - WindIce	0,45
			WI_x-y+ - WindIce	0,45
			WI_x-y- - WindIce	0,45
			WI_y+ - WindIce	0,45
			WI_y- - WindIce	0,45
			6T - self weight of tower	1,44
			6C - self weight of conductor	1,20
			Tuls-3 - Conductor tension	1,00
4	Maintenance	Omhullende -	W_x-y+ - Wind	0,30
			W_x+y- - Wind	0,30
			W_x-y- - Wind	0,30
			W_x+y+ - Wind	0,30
			W_y- - Wind	0,30
			W_y+ - Wind	0,30
			W_x- - Wind	0,30
			W_x+ - Wind	0,30
			6T - self weight of tower	1,44
			6C - self weight of conductor	1,20
			Tuls-4 - Conductor tension	1,00
			4C0 - Construction	1,50
			4C1 - Construction	1,50
			4C2 - Construction	1,50
			4C3 - Construction	1,50
			4C4 - Construction	1,50

Project	- 150 kV lijn Leiden - Zoetermeer
Onderdeel	- berekening Mast 55
Omschrijving	- ontwerpberekening
Nationale norm	EC - EN
Auteur	- SMA

Naam	Omschrijving	Type	Belastingsgevallen	Coëff. [-]
4	Maintenance	Omhullende -	4C5 - Construction	1,50
			4C6 - Construction	1,50
			4C7 - Construction	1,50
			4C8 - Construction	1,50
			4C9 - Construction	1,50
			4C10 - Construction	1,50
			4C11 - Construction	1,50
			4C12 - Construction	1,50
			4C13 - Construction	1,50
6	Permanent	Omhullende - uiterst	6T - self weight of tower	1,35
			6C - self weight of conductor	1,35
			Tuls-6 - Conductor tension	1,00
1a-p	wind;10	Omhullende - uiterst	W_x-y+ - Wind	1,50
			W_x+y- - Wind	1,50
			W_x-y- - Wind	1,50
			W_x+y+ - Wind	1,50
			W_y- - Wind	1,50
			W_y+ - Wind	1,50
			W_x- - Wind	1,50
			W_x+ - Wind	1,50
			6T - self weight of tower	1,08
			6C - self weight of conductor	0,90
			Tuls-1a - Conductor tension	1,00
1b-p	wind;-20	Omhullende - uiterst	W_x-y+ - Wind	0,30
			W_x+y- - Wind	0,30
			W_x-y- - Wind	0,30
			W_x+y+ - Wind	0,30
			W_y- - Wind	0,30
			W_y+ - Wind	0,30
			W_x- - Wind	0,30
			W_x+ - Wind	0,30
			6T - self weight of tower	1,08
			6C - self weight of conductor	0,90
			Tuls-1a - Conductor tension	1,00
3-p	wind+ice	Omhullende - uiterst	Ice - Ice	1,50
			WI_x+ - WindIce	0,45
			WI_x- - WindIce	0,45
			WI_x+y+ - WindIce	0,45
			WI_x+y- - WindIce	0,45
			WI_x-y+ - WindIce	0,45
			WI_x-y- - WindIce	0,45
			WI_y+ - WindIce	0,45
			WI_y- - WindIce	0,45
			6T - self weight of tower	1,08
			6C - self weight of conductor	0,90
			Tuls-3 - Conductor tension	1,00
4-p	Maintenance	Omhullende -	W_x-y+ - Wind	0,30
			W_x+y- - Wind	0,30
			W_x-y- - Wind	0,30
			W_x+y+ - Wind	0,30
			W_y- - Wind	0,30
			W_y+ - Wind	0,30
			W_x- - Wind	0,30
			W_x+ - Wind	0,30
			6T - self weight of tower	1,08
			6C - self weight of conductor	0,90
			Tuls-4 - Conductor tension	1,00
			4C0 - Construction	1,50
			4C1 - Construction	1,50
			4C2 - Construction	1,50
			4C3 - Construction	1,50
			4C4 - Construction	1,50
			4C5 - Construction	1,50
			4C6 - Construction	1,50
			4C7 - Construction	1,50

D&C ENGINEERING	Project	- 150 kV lijn Leiden - Zoetermeer
	Onderdeel	- berekening Mast 55
	Omschrijving	- ontwerpberekening
	Nationale norm	EC - EN
	Auteur	- SMA

Naam	Omschrijving	Type	Belastingsgevallen	Coëff. [-]
4-p	Maintenance	Omhullende - uiterst	4C8 - Construction	1,50
			4C9 - Construction	1,50
			4C10 - Construction	1,50
			4C11 - Construction	1,50
			4C12 - Construction	1,50
			4C13 - Construction	1,50
sp1aLF	wind;10	Omhullende - uiterst	W_x-y+ - Wind	0,78
			W_x+y- - Wind	0,78
			W_x-y- - Wind	0,78
			W_x+y+ - Wind	0,78
			W_y- - Wind	0,78
			W_y+ - Wind	0,78
			W_x- - Wind	0,78
			W_x+ - Wind	0,78
			6T - self weight of tower	1,44
			6C - self weight of conductor	1,20
			Tsls-1a-LR - Conductor tension	1,00
			Tsls-1a-RF - Conductor tension	1,00
			Tsls-1a-RR - Conductor tension	1,00
sp1aLR	wind;10	Omhullende - uiterst	W_x-y+ - Wind	0,78
			W_x+y- - Wind	0,78
			W_x-y- - Wind	0,78
			W_x+y+ - Wind	0,78
			W_y- - Wind	0,78
			W_y+ - Wind	0,78
			W_x- - Wind	0,78
			W_x+ - Wind	0,78
			6T - self weight of tower	1,44
			6C - self weight of conductor	1,20
			Tsls-1a-LF - Conductor tension	1,00
			Tsls-1a-RF - Conductor tension	1,00
			Tsls-1a-RR - Conductor tension	1,00
sp1aRF	wind;10	Omhullende - uiterst	W_x-y+ - Wind	0,78
			W_x+y- - Wind	0,78
			W_x-y- - Wind	0,78
			W_x+y+ - Wind	0,78
			W_y- - Wind	0,78
			W_y+ - Wind	0,78
			W_x- - Wind	0,78
			W_x+ - Wind	0,78
			6T - self weight of tower	1,44
			6C - self weight of conductor	1,20
			Tsls-1a-LF - Conductor tension	1,00
			Tsls-1a-LR - Conductor tension	1,00
			Tsls-1a-RR - Conductor tension	1,00
sp1aRR	wind;10	Omhullende - uiterst	W_x-y+ - Wind	0,78
			W_x+y- - Wind	0,78
			W_x-y- - Wind	0,78
			W_x+y+ - Wind	0,78
			W_y- - Wind	0,78
			W_y+ - Wind	0,78
			W_x- - Wind	0,78
			W_x+ - Wind	0,78
			6T - self weight of tower	1,44
			6C - self weight of conductor	1,20
			Tsls-1a-LF - Conductor tension	1,00
			Tsls-1a-LR - Conductor tension	1,00
			Tsls-1a-RF - Conductor tension	1,00
sp1aF	wind;10	Omhullende -	W_x-y+ - Wind	0,78
			W_x+y- - Wind	0,78
			W_x-y- - Wind	0,78
			W_x+y+ - Wind	0,78
			W_y- - Wind	0,78
			W_y+ - Wind	0,78
			W_x- - Wind	0,78

D&C ENGINEERING	Project	- 150 kV lijn Leiden - Zoetermeer
	Onderdeel	- berekening Mast 55
	Omschrijving	- ontwerpberekening
	Nationale norm	EC - EN
	Auteur	- SMA

Naam	Omschrijving	Type	Belastingsgevallen	Coëff. [-]
sp1aF	wind;10	Omhullende - uiterst	W_x+ - Wind	0,78
			6T - self weight of tower	1,44
			6C - self weight of conductor	1,20
			Tsls-1a-LR - Conductor tension	1,00
			Tsls-1a-RR - Conductor tension	1,00
sp1aR	wind;10	Omhullende - uiterst	W_x-y+ - Wind	0,78
			W_x+y- - Wind	0,78
			W_x-y- - Wind	0,78
			W_x+y+ - Wind	0,78
			W_y- - Wind	0,78
			W_y+ - Wind	0,78
			W_x- - Wind	0,78
			W_x+ - Wind	0,78
			6T - self weight of tower	1,44
			6C - self weight of conductor	1,20
			Tsls-1a-LF - Conductor tension	1,00
			Tsls-1a-RF - Conductor tension	1,00
sp1aLF-p	wind;10	Omhullende - uiterst	W_x-y+ - Wind	0,78
			W_x+y- - Wind	0,78
			W_x-y- - Wind	0,78
			W_x+y+ - Wind	0,78
			W_y- - Wind	0,78
			W_y+ - Wind	0,78
			W_x- - Wind	0,78
			W_x+ - Wind	0,78
			6T - self weight of tower	1,08
			6C - self weight of conductor	0,90
			Tsls-1a-LR - Conductor tension	1,00
			Tsls-1a-RF - Conductor tension	1,00
			Tsls-1a-RR - Conductor tension	1,00
sp1aLR-p	wind;10	Omhullende - uiterst	W_x-y+ - Wind	0,78
			W_x+y- - Wind	0,78
			W_x-y- - Wind	0,78
			W_x+y+ - Wind	0,78
			W_y- - Wind	0,78
			W_y+ - Wind	0,78
			W_x- - Wind	0,78
			W_x+ - Wind	0,78
			6T - self weight of tower	1,08
			6C - self weight of conductor	0,90
			Tsls-1a-LF - Conductor tension	1,00
			Tsls-1a-RF - Conductor tension	1,00
			Tsls-1a-RR - Conductor tension	1,00
sp1aRF-p	wind;10	Omhullende - uiterst	W_x-y+ - Wind	0,78
			W_x+y- - Wind	0,78
			W_x-y- - Wind	0,78
			W_x+y+ - Wind	0,78
			W_y- - Wind	0,78
			W_y+ - Wind	0,78
			W_x- - Wind	0,78
			W_x+ - Wind	0,78
			6T - self weight of tower	1,08
			6C - self weight of conductor	0,90
			Tsls-1a-LF - Conductor tension	1,00
			Tsls-1a-LR - Conductor tension	1,00
			Tsls-1a-RR - Conductor tension	1,00
sp1aRR-p	wind;10	Omhullende -	W_x-y+ - Wind	0,78
			W_x+y- - Wind	0,78
			W_x-y- - Wind	0,78
			W_x+y+ - Wind	0,78
			W_y- - Wind	0,78
			W_y+ - Wind	0,78
			W_x- - Wind	0,78
			W_x+ - Wind	0,78
			6T - self weight of tower	1,08

D&C ENGINEERING	Project	- 150 kV lijn Leiden - Zoetermeer
	Onderdeel	- berekening Mast 55
	Omschrijving	- ontwerpberekening
	Nationale norm	EC - EN
	Auteur	- SMA

Naam	Omschrijving	Type	Belastingsgevallen	Coëff. [-]
sp1aRR-p	wind;10	Omhullende - uiterst	6C - self weight of conductor	0,90
			Tsls-1a-LF - Conductor tension	1,00
			Tsls-1a-LR - Conductor tension	1,00
			Tsls-1a-RF - Conductor tension	1,00
sp1aF-p	wind;10	Omhullende - uiterst	W_x-y+ - Wind	0,78
			W_x+y- - Wind	0,78
			W_x-y- - Wind	0,78
			W_x+y+ - Wind	0,78
			W_y- - Wind	0,78
			W_y+ - Wind	0,78
			W_x- - Wind	0,78
			W_x+ - Wind	0,78
			6T - self weight of tower	1,08
			6C - self weight of conductor	0,90
			Tsls-1a-LR - Conductor tension	1,00
			Tsls-1a-RR - Conductor tension	1,00
sp1aR-p	wind;10	Omhullende - uiterst	W_x-y+ - Wind	0,78
			W_x+y- - Wind	0,78
			W_x-y- - Wind	0,78
			W_x+y+ - Wind	0,78
			W_y- - Wind	0,78
			W_y+ - Wind	0,78
			W_x- - Wind	0,78
			W_x+ - Wind	0,78
			6T - self weight of tower	1,08
			6C - self weight of conductor	0,90
			Tsls-1a-LF - Conductor tension	1,00
			Tsls-1a-RF - Conductor tension	1,00
sp1bLF	wind;-20	Omhullende - uiterst	W_x-y+ - Wind	0,24
			W_x+y- - Wind	0,24
			W_x-y- - Wind	0,24
			W_x+y+ - Wind	0,24
			W_y- - Wind	0,24
			W_y+ - Wind	0,24
			W_x- - Wind	0,24
			W_x+ - Wind	0,24
			6T - self weight of tower	1,44
			6C - self weight of conductor	1,20
			Tsls-1b-LR - Conductor tension	1,00
			Tsls-1b-RF - Conductor tension	1,00
			Tsls-1b-RR - Conductor tension	1,00
sp1bLR	wind;-20	Omhullende - uiterst	W_x-y+ - Wind	0,24
			W_x+y- - Wind	0,24
			W_x-y- - Wind	0,24
			W_x+y+ - Wind	0,24
			W_y- - Wind	0,24
			W_y+ - Wind	0,24
			W_x- - Wind	0,24
			W_x+ - Wind	0,24
			6T - self weight of tower	1,44
			6C - self weight of conductor	1,20
			Tsls-1b-LF - Conductor tension	1,00
			Tsls-1b-RF - Conductor tension	1,00
			Tsls-1b-RR - Conductor tension	1,00
sp1bRF	wind;-20	Omhullende -	W_x-y+ - Wind	0,24
			W_x+y- - Wind	0,24
			W_x-y- - Wind	0,24
			W_x+y+ - Wind	0,24
			W_y- - Wind	0,24
			W_y+ - Wind	0,24
			W_x- - Wind	0,24
			W_x+ - Wind	0,24
			6T - self weight of tower	1,44
			6C - self weight of conductor	1,20
			Tsls-1b-LF - Conductor tension	1,00

Project	- 150 kV lijn Leiden - Zoetermeer
Onderdeel	- berekening Mast 55
Omschrijving	- ontwerpberekening
Nationale norm	EC - EN
Auteur	- SMA

Naam	Omschrijving	Type	Belastingsgevallen	Coëff. [-]
sp1bRF	wind;-20	Omhullende - uiterst	Tsls-1b-LR - Conductor tension	1,00
			Tsls-1b-RR - Conductor tension	1,00
sp1bRR	wind;-20	Omhullende - uiterst	W_x-y+ - Wind	0,24
			W_x+y- - Wind	0,24
			W_x-y- - Wind	0,24
			W_x+y+ - Wind	0,24
			W_y- - Wind	0,24
			W_y+ - Wind	0,24
			W_x- - Wind	0,24
			W_x+ - Wind	0,24
			6T - self weight of tower	1,44
			6C - self weight of conductor	1,20
			Tsls-1b-LF - Conductor tension	1,00
			Tsls-1b-LR - Conductor tension	1,00
			Tsls-1b-RF - Conductor tension	1,00
sp1bF	wind;-20	Omhullende - uiterst	W_x-y+ - Wind	0,24
			W_x+y- - Wind	0,24
			W_x-y- - Wind	0,24
			W_x+y+ - Wind	0,24
			W_y- - Wind	0,24
			W_y+ - Wind	0,24
			W_x- - Wind	0,24
			W_x+ - Wind	0,24
			6T - self weight of tower	1,44
			6C - self weight of conductor	1,20
			Tsls-1b-LR - Conductor tension	1,00
			Tsls-1b-RR - Conductor tension	1,00
sp1bR	wind;-20	Omhullende - uiterst	W_x-y+ - Wind	0,24
			W_x+y- - Wind	0,24
			W_x-y- - Wind	0,24
			W_x+y+ - Wind	0,24
			W_y- - Wind	0,24
			W_y+ - Wind	0,24
			W_x- - Wind	0,24
			W_x+ - Wind	0,24
			6T - self weight of tower	1,44
			6C - self weight of conductor	1,20
			Tsls-1b-LF - Conductor tension	1,00
			Tsls-1b-RF - Conductor tension	1,00
sp1bLF-p	wind;-20	Omhullende - uiterst	W_x-y+ - Wind	0,24
			W_x+y- - Wind	0,24
			W_x-y- - Wind	0,24
			W_x+y+ - Wind	0,24
			W_y- - Wind	0,24
			W_y+ - Wind	0,24
			W_x- - Wind	0,24
			W_x+ - Wind	0,24
			6T - self weight of tower	1,08
			6C - self weight of conductor	0,90
			Tsls-1b-LR - Conductor tension	1,00
			Tsls-1b-RF - Conductor tension	1,00
			Tsls-1b-RR - Conductor tension	1,00
sp1bLR-p	wind;-20	Omhullende - uiterst	W_x-y+ - Wind	0,24
			W_x+y- - Wind	0,24
			W_x-y- - Wind	0,24
			W_x+y+ - Wind	0,24
			W_y- - Wind	0,24
			W_y+ - Wind	0,24
			W_x- - Wind	0,24
			W_x+ - Wind	0,24
			6T - self weight of tower	1,08
			6C - self weight of conductor	0,90
			Tsls-1b-LF - Conductor tension	1,00
			Tsls-1b-RF - Conductor tension	1,00
			Tsls-1b-RR - Conductor tension	1,00

D&C ENGINEERING	Project	- 150 kV lijn Leiden - Zoetermeer
	Onderdeel	- berekening Mast 55
	Omschrijving	- ontwerpberekening
	Nationale norm	EC - EN
	Auteur	- SMA

Naam	Omschrijving	Type	Belastingsgevallen	Coëff. [-]
sp1bRF-p	wind;-20	Omhullende - uiterst	W_x-y+ - Wind	0,24
			W_x+y- - Wind	0,24
			W_x-y- - Wind	0,24
			W_x+y+ - Wind	0,24
			W_y- - Wind	0,24
			W_y+ - Wind	0,24
			W_x- - Wind	0,24
			W_x+ - Wind	0,24
			6T - self weight of tower	1,08
			6C - self weight of conductor	0,90
			Tsls-1b-LF - Conductor tension	1,00
			Tsls-1b-LR - Conductor tension	1,00
			Tsls-1b-RR - Conductor tension	1,00
sp1bRR-p	wind;-20	Omhullende - uiterst	W_x-y+ - Wind	0,24
			W_x+y- - Wind	0,24
			W_x-y- - Wind	0,24
			W_x+y+ - Wind	0,24
			W_y- - Wind	0,24
			W_y+ - Wind	0,24
			W_x- - Wind	0,24
			W_x+ - Wind	0,24
			6T - self weight of tower	1,08
			6C - self weight of conductor	0,90
			Tsls-1b-LF - Conductor tension	1,00
			Tsls-1b-LR - Conductor tension	1,00
			Tsls-1b-RF - Conductor tension	1,00
sp1bF-p	wind;-20	Omhullende - uiterst	W_x-y+ - Wind	0,24
			W_x+y- - Wind	0,24
			W_x-y- - Wind	0,24
			W_x+y+ - Wind	0,24
			W_y- - Wind	0,24
			W_y+ - Wind	0,24
			W_x- - Wind	0,24
			W_x+ - Wind	0,24
			6T - self weight of tower	1,08
			6C - self weight of conductor	0,90
			Tsls-1b-LR - Conductor tension	1,00
			Tsls-1b-RR - Conductor tension	1,00
sp1bR-p	wind;-20	Omhullende - uiterst	W_x-y+ - Wind	0,24
			W_x+y- - Wind	0,24
			W_x-y- - Wind	0,24
			W_x+y+ - Wind	0,24
			W_y- - Wind	0,24
			W_y+ - Wind	0,24
			W_x- - Wind	0,24
			W_x+ - Wind	0,24
			6T - self weight of tower	1,08
			6C - self weight of conductor	0,90
			Tsls-1b-LF - Conductor tension	1,00
			Tsls-1b-RF - Conductor tension	1,00
sp3LF	wind+ice	Omhullende - uiterst	Ice - Ice	1,00
			WI_x+ - WindIce	0,36
			WI_x- - WindIce	0,36
			WI_x+y+ - WindIce	0,36
			WI_x+y- - WindIce	0,36
			WI_x-y+ - WindIce	0,36
			WI_x-y- - WindIce	0,36
			WI_y+ - WindIce	0,36
			WI_y- - WindIce	0,36
			6T - self weight of tower	1,44
			6C - self weight of conductor	1,20
			Tsls-3-LR - Conductor tension	1,00
			Tsls-3-RF - Conductor tension	1,00
			Tsls-3-RR - Conductor tension	1,00
sp3LR	wind+ice	Omhullende -	Ice - Ice	1,00

D&C ENGINEERING	Project	- 150 kV lijn Leiden - Zoetermeer
	Onderdeel	- berekening Mast 55
	Omschrijving	- ontwerpberekening
	Nationale norm	EC - EN
	Auteur	- SMA

Naam	Omschrijving	Type	Belastingsgevallen	Coëff. [-]
sp3LR	wind+ice	Omhullende - uiterst	WI_x+ - WindIce	0,36
			WI_x- - WindIce	0,36
			WI_x+y+ - WindIce	0,36
			WI_x+y- - WindIce	0,36
			WI_x-y+ - WindIce	0,36
			WI_x-y- - WindIce	0,36
			WI_y+ - WindIce	0,36
			WI_y- - WindIce	0,36
			6T - self weight of tower	1,44
			6C - self weight of conductor	1,20
			Tsls-3-LF - Conductor tension	1,00
			Tsls-3-RF - Conductor tension	1,00
			Tsls-3-RR - Conductor tension	1,00
sp3RF	wind+ice	Omhullende - uiterst	Ice - Ice	1,00
			WI_x+ - WindIce	0,36
			WI_x- - WindIce	0,36
			WI_x+y+ - WindIce	0,36
			WI_x+y- - WindIce	0,36
			WI_x-y+ - WindIce	0,36
			WI_x-y- - WindIce	0,36
			WI_y+ - WindIce	0,36
			WI_y- - WindIce	0,36
			6T - self weight of tower	1,44
			6C - self weight of conductor	1,20
			Tsls-3-LF - Conductor tension	1,00
			Tsls-3-LR - Conductor tension	1,00
			Tsls-3-RR - Conductor tension	1,00
sp3RR	wind+ice	Omhullende - uiterst	Ice - Ice	1,00
			WI_x+ - WindIce	0,36
			WI_x- - WindIce	0,36
			WI_x+y+ - WindIce	0,36
			WI_x+y- - WindIce	0,36
			WI_x-y+ - WindIce	0,36
			WI_x-y- - WindIce	0,36
			WI_y+ - WindIce	0,36
			WI_y- - WindIce	0,36
			6T - self weight of tower	1,44
			6C - self weight of conductor	1,20
			Tsls-3-LF - Conductor tension	1,00
			Tsls-3-LR - Conductor tension	1,00
			Tsls-3-RF - Conductor tension	1,00
sp3F	wind+ice	Omhullende - uiterst	Ice - Ice	1,00
			WI_x+ - WindIce	0,36
			WI_x- - WindIce	0,36
			WI_x+y+ - WindIce	0,36
			WI_x+y- - WindIce	0,36
			WI_x-y+ - WindIce	0,36
			WI_x-y- - WindIce	0,36
			WI_y+ - WindIce	0,36
			WI_y- - WindIce	0,36
			6T - self weight of tower	1,44
			6C - self weight of conductor	1,20
			Tsls-3-LR - Conductor tension	1,00
			Tsls-3-RR - Conductor tension	1,00
sp3R	wind+ice	Omhullende -	Ice - Ice	1,00
			WI_x+ - WindIce	0,36
			WI_x- - WindIce	0,36
			WI_x+y+ - WindIce	0,36
			WI_x+y- - WindIce	0,36
			WI_x-y+ - WindIce	0,36
			WI_x-y- - WindIce	0,36
			WI_y+ - WindIce	0,36
			WI_y- - WindIce	0,36
			6T - self weight of tower	1,44
			6C - self weight of conductor	1,20

D&C ENGINEERING	Project	- 150 kV lijn Leiden - Zoetermeer
	Onderdeel	- berekening Mast 55
	Omschrijving	- ontwerpberekening
	Nationale norm	EC - EN
	Auteur	- SMA

Naam	Omschrijving	Type	Belastingsgevallen	Coëff. [-]
sp3R	wind+ice	Omhullende - uiterst	Tsls-3-LF - Conductor tension	1,00
			Tsls-3-RF - Conductor tension	1,00
sp3LF-p	wind+ice	Omhullende - uiterst	Ice - Ice	1,00
			Wl_x+ - WindIce	0,36
			Wl_x- - WindIce	0,36
			Wl_x+y+ - WindIce	0,36
			Wl_x+y- - WindIce	0,36
			Wl_x-y+ - WindIce	0,36
			Wl_x-y- - WindIce	0,36
			Wl_y+ - WindIce	0,36
			Wl_y- - WindIce	0,36
			6T - self weight of tower	1,08
			6C - self weight of conductor	0,90
			Tsls-3-LR - Conductor tension	1,00
			Tsls-3-RF - Conductor tension	1,00
			Tsls-3-RR - Conductor tension	1,00
sp3LR-p	wind+ice	Omhullende - uiterst	Ice - Ice	1,00
			Wl_x+ - WindIce	0,36
			Wl_x- - WindIce	0,36
			Wl_x+y+ - WindIce	0,36
			Wl_x+y- - WindIce	0,36
			Wl_x-y+ - WindIce	0,36
			Wl_x-y- - WindIce	0,36
			Wl_y+ - WindIce	0,36
			Wl_y- - WindIce	0,36
			6T - self weight of tower	1,08
			6C - self weight of conductor	0,90
			Tsls-3-LF - Conductor tension	1,00
			Tsls-3-RF - Conductor tension	1,00
			Tsls-3-RR - Conductor tension	1,00
sp3RF-p	wind+ice	Omhullende - uiterst	Ice - Ice	1,00
			Wl_x+ - WindIce	0,36
			Wl_x- - WindIce	0,36
			Wl_x+y+ - WindIce	0,36
			Wl_x+y- - WindIce	0,36
			Wl_x-y+ - WindIce	0,36
			Wl_x-y- - WindIce	0,36
			Wl_y+ - WindIce	0,36
			Wl_y- - WindIce	0,36
			6T - self weight of tower	1,08
			6C - self weight of conductor	0,90
			Tsls-3-LF - Conductor tension	1,00
			Tsls-3-LR - Conductor tension	1,00
			Tsls-3-RR - Conductor tension	1,00
sp3RR-p	wind+ice	Omhullende - uiterst	Ice - Ice	1,00
			Wl_x+ - WindIce	0,36
			Wl_x- - WindIce	0,36
			Wl_x+y+ - WindIce	0,36
			Wl_x+y- - WindIce	0,36
			Wl_x-y+ - WindIce	0,36
			Wl_x-y- - WindIce	0,36
			Wl_y+ - WindIce	0,36
			Wl_y- - WindIce	0,36
			6T - self weight of tower	1,08
			6C - self weight of conductor	0,90
			Tsls-3-LF - Conductor tension	1,00
			Tsls-3-LR - Conductor tension	1,00
			Tsls-3-RF - Conductor tension	1,00
sp3F-p	wind+ice	Omhullende -	Ice - Ice	1,00
			Wl_x+ - WindIce	0,36
			Wl_x- - WindIce	0,36
			Wl_x+y+ - WindIce	0,36
			Wl_x+y- - WindIce	0,36
			Wl_x-y+ - WindIce	0,36
			Wl_x-y- - WindIce	0,36

D&C ENGINEERING	Project	- 150 kV lijn Leiden - Zoetermeer
	Onderdeel	- berekening Mast 55
	Omschrijving	- ontwerpberekening
	Nationale norm	EC - EN
	Auteur	- SMA

Naam	Omschrijving	Type	Belastingsgevallen	Coëff. [-]
sp3F-p	wind+ice	Omhullende - uiterst	WI_y+ - WindIce	0,36
			WI_y- - WindIce	0,36
			6T - self weight of tower	1,08
			6C - self weight of conductor	0,90
			Tsls-3-LR - Conductor tension	1,00
			Tsls-3-RR - Conductor tension	1,00
sp3R-p	wind+ice	Omhullende - uiterst	Ice - Ice	1,00
			WI_x+ - WindIce	0,36
			WI_x- - WindIce	0,36
			WI_x+y+ - WindIce	0,36
			WI_x+y- - WindIce	0,36
			WI_x-y+ - WindIce	0,36
			WI_x-y- - WindIce	0,36
			WI_y+ - WindIce	0,36
			WI_y- - WindIce	0,36
			6T - self weight of tower	1,08
			6C - self weight of conductor	0,90
			Tsls-3-LF - Conductor tension	1,00
			Tsls-3-RF - Conductor tension	1,00
sp4LF	maintenance	Omhullende - uiterst	W_x-y+ - Wind	0,24
			W_x+y- - Wind	0,24
			W_x-y- - Wind	0,24
			W_x+y+ - Wind	0,24
			W_y- - Wind	0,24
			W_y+ - Wind	0,24
			W_x- - Wind	0,24
			W_x+ - Wind	0,24
			6T - self weight of tower	1,44
			6C - self weight of conductor	1,20
			4C0 - Construction	1,20
			4C1 - Construction	1,20
			4C2 - Construction	1,20
			4C3 - Construction	1,20
			4C4 - Construction	1,20
			4C5 - Construction	1,20
			4C6 - Construction	1,20
			4C7 - Construction	1,20
			4C8 - Construction	1,20
			4C9 - Construction	1,20
			4C10 - Construction	1,20
			4C11 - Construction	1,20
			Tsls-4-LR - Conductor tension	1,00
			Tsls-4-RF - Conductor tension	1,00
			Tsls-4-RR - Conductor tension	1,00
			4C12 - Construction	1,20
			4C13 - Construction	1,20
sp4LR	maintenance	Omhullende -	W_x-y+ - Wind	0,24
			W_x+y- - Wind	0,24
			W_x-y- - Wind	0,24
			W_x+y+ - Wind	0,24
			W_y- - Wind	0,24
			W_y+ - Wind	0,24
			W_x- - Wind	0,24
			W_x+ - Wind	0,24
			6T - self weight of tower	1,44
			6C - self weight of conductor	1,20
			4C0 - Construction	1,20
			4C1 - Construction	1,20
			4C2 - Construction	1,20
			4C3 - Construction	1,20
			4C4 - Construction	1,20
			4C5 - Construction	1,20
			4C6 - Construction	1,20
			4C7 - Construction	1,20
			4C8 - Construction	1,20

D&C ENGINEERING	Project	- 150 kV lijn Leiden - Zoetermeer
	Onderdeel	- berekening Mast 55
	Omschrijving	- ontwerpberekening
	Nationale norm	EC - EN
	Auteur	- SMA

Naam	Omschrijving	Type	Belastingsgevallen	Coëff. [-]
sp4LR	maintenance	Omhullende - uiterst	4C9 - Construction	1,20
			4C10 - Construction	1,20
			4C11 - Construction	1,20
			Tsls-4-LF - Conductor tension	1,00
			Tsls-4-RF - Conductor tension	1,00
			Tsls-4-RR - Conductor tension	1,00
			4C12 - Construction	1,20
			4C13 - Construction	1,20
sp4RF	maintenance	Omhullende - uiterst	W_x-y+ - Wind	0,24
			W_x+y- - Wind	0,24
			W_x-y- - Wind	0,24
			W_x+y+ - Wind	0,24
			W_y- - Wind	0,24
			W_y+ - Wind	0,24
			W_x- - Wind	0,24
			W_x+ - Wind	0,24
			6T - self weight of tower	1,44
			6C - self weight of conductor	1,20
			4C0 - Construction	1,20
			4C1 - Construction	1,20
			4C2 - Construction	1,20
			4C3 - Construction	1,20
			4C4 - Construction	1,20
			4C5 - Construction	1,20
			4C6 - Construction	1,20
			4C7 - Construction	1,20
			4C8 - Construction	1,20
			4C9 - Construction	1,20
			4C10 - Construction	1,20
			4C11 - Construction	1,20
			Tsls-4-LF - Conductor tension	1,00
			Tsls-4-LR - Conductor tension	1,00
			Tsls-4-RR - Conductor tension	1,00
			4C12 - Construction	1,20
			4C13 - Construction	1,20
sp4RR	maintenance	Omhullende - uiterst	W_x-y+ - Wind	0,24
			W_x+y- - Wind	0,24
			W_x-y- - Wind	0,24
			W_x+y+ - Wind	0,24
			W_y- - Wind	0,24
			W_y+ - Wind	0,24
			W_x- - Wind	0,24
			W_x+ - Wind	0,24
			6T - self weight of tower	1,44
			6C - self weight of conductor	1,20
			4C0 - Construction	1,20
			4C1 - Construction	1,20
			4C2 - Construction	1,20
			4C3 - Construction	1,20
			4C4 - Construction	1,20
			4C5 - Construction	1,20
			4C6 - Construction	1,20
			4C7 - Construction	1,20
			4C8 - Construction	1,20
			4C9 - Construction	1,20
			4C10 - Construction	1,20
			4C11 - Construction	1,20
			Tsls-4-LF - Conductor tension	1,00
			Tsls-4-LR - Conductor tension	1,00
			Tsls-4-RF - Conductor tension	1,00
			4C12 - Construction	1,20
			4C13 - Construction	1,20
sp4F	maintenance	Omhullende -	W_x-y+ - Wind	0,24
			W_x+y- - Wind	0,24
			W_x-y- - Wind	0,24

D&C ENGINEERING	Project	- 150 kV lijn Leiden - Zoetermeer
	Onderdeel	- berekening Mast 55
	Omschrijving	- ontwerpberekening
	Nationale norm	EC - EN
	Auteur	- SMA

Naam	Omschrijving	Type	Belastingsgevallen	Coëff. [-]
sp4F	maintenance	Omhullende - uiterst	W_x+y+ - Wind	0,24
			W_y- - Wind	0,24
			W_y+ - Wind	0,24
			W_x- - Wind	0,24
			W_x+ - Wind	0,24
			6T - self weight of tower	1,44
			6C - self weight of conductor	1,20
			4C0 - Construction	1,20
			4C1 - Construction	1,20
			4C2 - Construction	1,20
			4C3 - Construction	1,20
			4C4 - Construction	1,20
			4C5 - Construction	1,20
			4C6 - Construction	1,20
			4C7 - Construction	1,20
			4C8 - Construction	1,20
			4C9 - Construction	1,20
			4C10 - Construction	1,20
			4C11 - Construction	1,20
			Tsls-4-LR - Conductor tension	1,00
			Tsls-4-RR - Conductor tension	1,00
			4C12 - Construction	1,20
			4C13 - Construction	1,20
sp4R	maintenance	Omhullende - uiterst	W_x-y+ - Wind	0,24
			W_x+y- - Wind	0,24
			W_x-y- - Wind	0,24
			W_x+y+ - Wind	0,24
			W_y- - Wind	0,24
			W_y+ - Wind	0,24
			W_x- - Wind	0,24
			W_x+ - Wind	0,24
			6T - self weight of tower	1,44
			6C - self weight of conductor	1,20
			4C0 - Construction	1,20
			4C1 - Construction	1,20
			4C2 - Construction	1,20
			4C3 - Construction	1,20
			4C4 - Construction	1,20
			4C5 - Construction	1,20
			4C6 - Construction	1,20
			4C7 - Construction	1,20
			4C8 - Construction	1,20
			4C9 - Construction	1,20
			4C10 - Construction	1,20
			4C11 - Construction	1,20
			Tsls-4-LF - Conductor tension	1,00
			Tsls-4-RF - Conductor tension	1,00
			4C12 - Construction	1,20
			4C13 - Construction	1,20
sp4LF-p	maintenance	Omhullende -	W_x-y+ - Wind	0,24
			W_x+y- - Wind	0,24
			W_x-y- - Wind	0,24
			W_x+y+ - Wind	0,24
			W_y- - Wind	0,24
			W_y+ - Wind	0,24
			W_x- - Wind	0,24
			W_x+ - Wind	0,24
			6T - self weight of tower	1,08
			6C - self weight of conductor	0,90
			4C0 - Construction	1,20
			4C1 - Construction	1,20
			4C2 - Construction	1,20
			4C3 - Construction	1,20
			4C4 - Construction	1,20
			4C5 - Construction	1,20

D&C ENGINEERING	Project	- 150 kV lijn Leiden - Zoetermeer
	Onderdeel	- berekening Mast 55
	Omschrijving	- ontwerpberekening
	Nationale norm	EC - EN
	Auteur	- SMA

Naam	Omschrijving	Type	Belastingsgevallen	Coëff. [-]
sp4LF-p	maintenance	Omhullende - uiterst	4C6 - Construction	1,20
			4C7 - Construction	1,20
			4C8 - Construction	1,20
			4C9 - Construction	1,20
			4C10 - Construction	1,20
			4C11 - Construction	1,20
			Tsls-4-LR - Conductor tension	1,00
			Tsls-4-RF - Conductor tension	1,00
			Tsls-4-RR - Conductor tension	1,00
			4C12 - Construction	1,20
			4C13 - Construction	1,20
sp4LR-p	maintenance	Omhullende - uiterst	W_x-y+ - Wind	0,24
			W_x+y- - Wind	0,24
			W_x-y- - Wind	0,24
			W_x+y+ - Wind	0,24
			W_y- - Wind	0,24
			W_y+ - Wind	0,24
			W_x- - Wind	0,24
			W_x+ - Wind	0,24
			6T - self weight of tower	1,08
			6C - self weight of conductor	0,90
			4C0 - Construction	1,20
			4C1 - Construction	1,20
			4C2 - Construction	1,20
			4C3 - Construction	1,20
			4C4 - Construction	1,20
			4C5 - Construction	1,20
			4C6 - Construction	1,20
			4C7 - Construction	1,20
			4C8 - Construction	1,20
			4C9 - Construction	1,20
			4C10 - Construction	1,20
			4C11 - Construction	1,20
			Tsls-4-LF - Conductor tension	1,00
			Tsls-4-RF - Conductor tension	1,00
			Tsls-4-RR - Conductor tension	1,00
			4C12 - Construction	1,20
			4C13 - Construction	1,20
sp4RF-p	maintenance	Omhullende - uiterst	W_x-y+ - Wind	0,24
			W_x+y- - Wind	0,24
			W_x-y- - Wind	0,24
			W_x+y+ - Wind	0,24
			W_y- - Wind	0,24
			W_y+ - Wind	0,24
			W_x- - Wind	0,24
			W_x+ - Wind	0,24
			6T - self weight of tower	1,08
			6C - self weight of conductor	0,90
			4C0 - Construction	1,20
			4C1 - Construction	1,20
			4C2 - Construction	1,20
			4C3 - Construction	1,20
			4C4 - Construction	1,20
			4C5 - Construction	1,20
			4C6 - Construction	1,20
			4C7 - Construction	1,20
			4C8 - Construction	1,20
			4C9 - Construction	1,20
			4C10 - Construction	1,20
			4C11 - Construction	1,20
			Tsls-4-LF - Conductor tension	1,00
			Tsls-4-LR - Conductor tension	1,00
			Tsls-4-RR - Conductor tension	1,00
			4C12 - Construction	1,20
			4C13 - Construction	1,20

D&C ENGINEERING	Project	- 150 kV lijn Leiden - Zoetermeer
	Onderdeel	- berekening Mast 55
	Omschrijving	- ontwerpberekening
	Nationale norm	EC - EN
	Auteur	- SMA

Naam	Omschrijving	Type	Belastingsgevallen	Coëff. [-]
sp4RR-p	maintenance	Omhullende - uiterst	W_x-y+ - Wind	0,24
			W_x+y- - Wind	0,24
			W_x-y- - Wind	0,24
			W_x+y+ - Wind	0,24
			W_y- - Wind	0,24
			W_y+ - Wind	0,24
			W_x- - Wind	0,24
			W_x+ - Wind	0,24
			6T - self weight of tower	1,08
			6C - self weight of conductor	0,90
			4C0 - Construction	1,20
			4C1 - Construction	1,20
			4C2 - Construction	1,20
			4C3 - Construction	1,20
			4C4 - Construction	1,20
			4C5 - Construction	1,20
			4C6 - Construction	1,20
			4C7 - Construction	1,20
			4C8 - Construction	1,20
			4C9 - Construction	1,20
			4C10 - Construction	1,20
			4C11 - Construction	1,20
			Tsls-4-LF - Conductor tension	1,00
			Tsls-4-LR - Conductor tension	1,00
			Tsls-4-RF - Conductor tension	1,00
			4C12 - Construction	1,20
			4C13 - Construction	1,20
sp4F-p	maintenance	Omhullende - uiterst	W_x-y+ - Wind	0,24
			W_x+y- - Wind	0,24
			W_x-y- - Wind	0,24
			W_x+y+ - Wind	0,24
			W_y- - Wind	0,24
			W_y+ - Wind	0,24
			W_x- - Wind	0,24
			W_x+ - Wind	0,24
			6T - self weight of tower	1,08
			6C - self weight of conductor	0,90
			4C0 - Construction	1,20
			4C1 - Construction	1,20
			4C2 - Construction	1,20
			4C3 - Construction	1,20
			4C4 - Construction	1,20
			4C5 - Construction	1,20
			4C6 - Construction	1,20
			4C7 - Construction	1,20
			4C8 - Construction	1,20
			4C9 - Construction	1,20
			4C10 - Construction	1,20
			4C11 - Construction	1,20
			Tsls-4-LR - Conductor tension	1,00
			Tsls-4-RR - Conductor tension	1,00
			4C12 - Construction	1,20
			4C13 - Construction	1,20
sp4R-p	maintenance	Omhullende -	W_x-y+ - Wind	0,24
			W_x+y- - Wind	0,24
			W_x-y- - Wind	0,24
			W_x+y+ - Wind	0,24
			W_y- - Wind	0,24
			W_y+ - Wind	0,24
			W_x- - Wind	0,24
			W_x+ - Wind	0,24
			6T - self weight of tower	1,08
			6C - self weight of conductor	0,90
			4C0 - Construction	1,20
			4C1 - Construction	1,20

D&C ENGINEERING	Project	- 150 kV lijn Leiden - Zoetermeer
	Onderdeel	- berekening Mast 55
	Omschrijving	- ontwerpberekening
	Nationale norm	EC - EN
	Auteur	- SMA

Naam	Omschrijving	Type	Belastingsgevallen	Coëff. [-]
sp4R-p	maintenance	Uitstallende -	4C2 - Construction	1,20
			4C3 - Construction	1,20
			4C4 - Construction	1,20
			4C5 - Construction	1,20
			4C6 - Construction	1,20
			4C7 - Construction	1,20
			4C8 - Construction	1,20
			4C9 - Construction	1,20
			4C10 - Construction	1,20
			4C11 - Construction	1,20
			Tsls-4-LF - Conductor tension	1,00
			Tsls-4-RF - Conductor tension	1,00
			4C12 - Construction	1,20
			4C13 - Construction	1,20

11. Resultaten

11.1. Interne krachten in staaf

Lineaire berekening, Extreem : Staaf, Systeem : Hoofd
Selectie : Alle
Klasse : All UGT

Staaf	BG	Geval beschrijving	N [kN]
B8	sp3RF-p/79	wind+ice	**148,91**
B8	sp3RR/78	wind+ice	**-151,20**
B10	sp3RF-p/130	wind+ice	**130,73**
B10	sp3RR/126	wind+ice	**-140,83**
B12	sp3RR-p/36	wind+ice	**149,92**
B12	sp3RF/35	wind+ice	**-144,28**
B22	sp3LF/74	wind+ice	**197,44**
B22	sp3LR-p/75	wind+ice	**-176,30**
B26	sp3LR/32	wind+ice	**-167,18**
B26	sp3LF-p/33	wind+ice	**165,38**
B31	sp3RF/46	wind+ice	**-137,86**
B31	sp3RR-p/48	wind+ice	**135,68**
B32	sp3LR-p/75	wind+ice	**147,72**
B32	sp3LF/74	wind+ice	**-167,32**
B33	sp3LF/134	wind+ice	**-147,83**
B33	sp3LR-p/135	wind+ice	**146,59**
B34	sp3LF-p/77	wind+ice	**145,35**
B34	sp3LR/76	wind+ice	**-159,76**
B36	sp3RF-p/79	wind+ice	**-259,69**
B36	sp3RR/78	wind+ice	**255,84**
B37	sp3RR-p/52	wind+ice	**-262,06**
B37	sp3RF/51	wind+ice	**241,55**
B38	sp3RF/123	wind+ice	**-201,04**
B38	sp3RR-p/141	wind+ice	**201,85**
B39	sp3LR-p/142	wind+ice	**219,42**
B39	sp3LF/31	wind+ice	**-226,23**
B73	sp3RF-p/89	wind+ice	**151,32**
B73	sp3RR/88	wind+ice	**-155,02**
B74	sp3RF/35	wind+ice	**171,86**
B74	sp3RR-p/36	wind+ice	**-181,18**
B75	sp3LR-p/103	wind+ice	**164,54**
B75	sp3LF/137	wind+ice	**-170,12**
B76	sp3LF-p/77	wind+ice	**-173,88**
B76	sp3LR/76	wind+ice	**187,94**
B84	sp3RF/173	wind+ice	**0,00**
B84	sp1aRR/172	wind;10	**0,00**
B85	sp1bF/174	wind;-20	**0,00**
B85	sp3RF/175	wind+ice	**0,00**
B86	sp3RR/127	wind+ice	**-9,68**
B86	sp3RF-p/97	wind+ice	**7,79**
B87	sp3RF/99	wind+ice	**-8,85**
B87	sp3RR-p/98	wind+ice	**8,18**
B88	sp3LF/86	wind+ice	**-10,41**
B88	sp3LR-p/157	wind+ice	**8,57**
B93	sp3LF-p/133	wind+ice	**150,52**
B93	sp3LR/3	wind+ice	**-147,84**
B94	sp3RF-p/79	wind+ice	**-179,27**
B94	sp3RR/78	wind+ice	**180,64**
B95	sp3RF/123	wind+ice	**-150,97**
B95	sp3RR-p/136	wind+ice	**155,28**
B98	sp3LF-p/77	wind+ice	**214,97**
B98	sp3LR/76	wind+ice	**-232,40**
B99	sp3RR-p/139	wind+ice	**166,56**
B99	sp3RF/138	wind+ice	**-166,25**
B100	sp3RR-p/36	wind+ice	**223,63**
B100	sp3RF/35	wind+ice	**-212,49**
B101	sp3LF-p/33	wind+ice	**184,16**
B101	sp3LR/140	wind+ice	**-182,64**
B102	sp3R/64	wind+ice	**4,70**
B102	sp3F-p/2	wind+ice	**-4,43**

Staaf	BG	Geval beschrijving	N [kN]
B103	1a/71	wind;10	**3,13**
B103	1a-p/70	wind;10	**-1,79**
B104	sp3F/26	wind+ice	**4,80**
B104	sp3R-p/27	wind+ice	**-4,30**
B105	1a/43	wind;10	**2,29**
B105	1a-p/44	wind;10	**-2,62**
B106	sp3RF-p/147	wind+ice	**162,58**
B106	sp3RR/154	wind+ice	**-170,24**
B107	sp3LR-p/75	wind+ice	**216,56**
B107	sp3LF/74	wind+ice	**-242,51**
B108	sp3LR/32	wind+ice	**182,06**
B108	sp3LF/153	wind+ice	**-183,95**
B109	sp3RF-p/79	wind+ice	**220,14**
B109	sp3RR/78	wind+ice	**-221,69**
B110	1a/71	wind;10	**0,00**
B110	1a/19	wind;10	**0,00**
B111	sp3F/41	wind+ice	**0,00**
B111	1a/15	wind;10	**0,00**
B112	1a/43	wind;10	**0,00**
B112	1a/56	wind;10	**0,00**
B113	sp3R/39	wind+ice	**0,00**
B113	1a/59	wind;10	**0,00**
B114	sp3LR/76	wind+ice	**264,46**
B114	sp3LF-p/77	wind+ice	**-248,87**
B115	sp3RF-p/89	wind+ice	**196,95**
B115	sp3RR/88	wind+ice	**-206,84**
B116	sp3LF/132	wind+ice	**279,54**
B116	sp3LR-p/155	wind+ice	**-253,44**
B117	sp3LF-p/33	wind+ice	**221,03**
B117	sp3LR/32	wind+ice	**-223,27**
B129	sp3RR-p/159	wind+ice	**49,16**
B129	sp3RF/158	wind+ice	**-47,98**
B130	sp3LR-p/142	wind+ice	**48,17**
B130	sp3LF/31	wind+ice	**-50,62**
B131	sp3LF-p/133	wind+ice	**49,64**
B131	sp3LR/32	wind+ice	**-49,57**
B132	sp3RF-p/161	wind+ice	**47,17**
B132	sp3RR/160	wind+ice	**-49,85**
B133	sp1aLR/163	wind;10	**0,60**
B133	3-p/162	wind+ice	**-0,09**
B154	sp3RF-p/38	wind+ice	**173,31**
B154	sp3RR/37	wind+ice	**-220,60**
B159	sp3RR-p/98	wind+ice	**239,61**
B159	sp3RF/123	wind+ice	**-247,44**
B160	sp3LF-p/85	wind+ice	**8,09**
B160	sp3LR/121	wind+ice	**-10,60**
B177	sp3F/41	wind+ice	**0,00**
B177	1a/19	wind;10	**-0,09**
B178	1a/71	wind;10	**0,00**
B178	1a/56	wind;10	**-0,09**
B179	sp3F/14	wind+ice	**0,00**
B179	1a/19	wind;10	**-0,12**
B180	sp3RR/37	wind+ice	**0,00**
B180	1a/56	wind;10	**-0,12**
B181	sp3F-p/34	wind+ice	**179,17**
B181	sp3R/17	wind+ice	**-209,74**
B182	sp3R-p/55	wind+ice	**174,27**
B182	sp3F/61	wind+ice	**-227,23**
B183	sp3F/61	wind+ice	**-221,41**
B183	sp3R-p/55	wind+ice	**167,64**

Staaf	BG	Geval beschrijving	N [kN]
B184	sp3R/17	wind+ice	**-216,17**
B184	sp3F-p/34	wind+ice	**185,17**
B185	3/84	wind+ice	**-1,17**
B185	1a-p/70	wind;10	**-0,80**
B186	1a/43	wind;10	**-1,02**
B186	sp3LR-p/176	wind+ice	**-0,74**
B187	1a-p/70	wind;10	**-1,28**
B187	3/84	wind+ice	**-1,81**
B188	sp3RR-p/36	wind+ice	**0,00**
B188	sp3RF/173	wind+ice	**0,00**
B189	sp3RR-p/47	wind+ice	**0,00**
B189	1a/71	wind;10	**-0,09**
B190	sp3LF/74	wind+ice	**0,00**
B190	1a/68	wind;10	**-0,09**
B191	sp3RF/175	wind+ice	**0,00**
B191	sp3RR-p/36	wind+ice	**0,00**
B192	sp3RR/37	wind+ice	**0,00**
B192	1a/56	wind;10	**-0,09**
B193	sp3F/4	wind+ice	**0,00**
B193	1a/19	wind;10	**-0,09**
B194	sp3RR/150	wind+ice	**0,00**
B194	sp3RR-p/36	wind+ice	**0,00**
B195	sp3F/14	wind+ice	**0,00**
B195	1a/19	wind;10	**-0,12**
B196	sp3RR/37	wind+ice	**0,00**
B196	1a/56	wind;10	**-0,12**
B197	sp3LF-p/18	wind+ice	**218,33**
B197	sp3LR/1	wind+ice	**-207,37**
B198	sp3LF/31	wind+ice	**-274,75**
B198	sp3LR-p/142	wind+ice	**252,50**
B199	sp3LF/179	wind+ice	**0,00**
B199	sp1bRF/178	wind;-20	**0,00**
B200	sp3F/61	wind+ice	**0,00**
B200	1a/59	wind;10	**-0,12**
B201	1a/15	wind;10	**-0,12**
B201	sp3LR/1	wind+ice	**0,00**
B202	sp3LF/179	wind+ice	**0,00**
B202	sp1aF/180	wind;10	**0,00**
B203	sp3F/61	wind+ice	**0,00**
B203	1a/59	wind;10	**-0,12**
B204	sp3LR/1	wind+ice	**0,00**
B204	1a/15	wind;10	**-0,12**
B205	sp3F/41	wind+ice	**0,00**
B205	1a/59	wind;10	**-0,09**
B206	1a/43	wind;10	**0,00**
B206	1a/15	wind;10	**-0,09**
B207	sp3LF/179	wind+ice	**0,00**
B207	sp1bLR/183	wind;-20	**0,00**
B208	sp3LR/1	wind+ice	**0,00**
B208	1a/15	wind;10	**-0,09**
B209	sp3F/26	wind+ice	**0,00**
B209	1a/59	wind;10	**-0,09**
B210	sp3LF/137	wind+ice	**0,00**
B210	sp4LR/184	maintenance	**0,00**
B211	sp3LF/137	wind+ice	**0,00**
B211	sp3LR-p/75	wind+ice	**0,00**
B212	sp3LF/12	wind+ice	**0,00**
B212	1a/15	wind;10	**-0,09**
B213	sp3RR-p/36	wind+ice	**0,00**
B213	1a/68	wind;10	**-0,09**

D&C ENGINEERING	Project	- 150 kV lijn Leiden - Zoetermeer
	Onderdeel	- berekening Mast 55
	Omschrijving	- ontwerpberekening
	Nationale norm	EC - EN
	Auteur	- SMA

Staaf	BG	Geval beschrijving	N [kN]
B214	sp3RF/65	wind+ice	**-224,24**
B214	sp3RR-p/47	wind+ice	**187,66**
B215	sp3RF-p/89	wind+ice	**237,40**
B215	sp3RR/127	wind+ice	**-250,50**
B216	sp4LF/188	maintenance	**0,00**
B216	sp3RF-p/187	wind+ice	**0,00**
B217	sp3R/17	wind+ice	**0,00**
B217	1a/15	wind;10	**-0,12**
B218	sp3RF/65	wind+ice	**0,00**
B218	1a/59	wind;10	**-0,12**
B219	sp3RF-p/187	wind+ice	**0,00**
B219	sp3F/61	wind+ice	**0,00**
B220	sp3R/17	wind+ice	**0,00**
B220	1a/15	wind;10	**-0,12**
B221	sp3RF/65	wind+ice	**0,00**
B221	1a/59	wind;10	**-0,12**
B222	sp3R/39	wind+ice	**0,00**
B222	1a/15	wind;10	**-0,09**
B223	1a/71	wind;10	**0,00**
B223	1a/59	wind;10	**-0,09**
B224	sp1aLF/190	wind;10	**0,00**
B224	sp3RF-p/187	wind+ice	**0,00**
B225	1a/59	wind;10	**-0,09**
B225	sp3RF/65	wind+ice	**0,00**
B226	sp3R/17	wind+ice	**0,00**
B226	1a/15	wind;10	**-0,09**
B227	sp1aLF/191	wind;10	**0,00**
B227	sp3RF-p/187	wind+ice	**0,00**
B228	sp3RR/192	wind+ice	**0,00**
B228	sp3RF-p/187	wind+ice	**0,00**
B229	sp3RR/37	wind+ice	**0,00**
B229	1a/71	wind;10	**-0,09**
B230	1a/66	wind;10	**-0,09**
B230	sp3LR/76	wind+ice	**0,00**
B231	sp3LR-p/21	wind+ice	**201,78**
B231	sp3LF/12	wind+ice	**-199,00**
B232	sp3LF-p/33	wind+ice	**256,83**
B232	sp3LR/32	wind+ice	**-267,30**
B233	sp3LR/169	wind+ice	**0,00**
B233	sp1aLR-p/193	wind;10	**0,00**
B234	sp3R/45	wind+ice	**0,00**
B234	1a/56	wind;10	**-0,12**
B235	sp3LR/169	wind+ice	**0,00**
B235	sp3R/24	wind+ice	**0,00**
B236	sp3R/39	wind+ice	**0,00**
B236	1a/56	wind;10	**-0,09**
B237	1a/19	wind;10	**-0,09**
B237	sp3R/17	wind+ice	**0,00**
B238	sp1aF/194	wind;10	**0,00**
B238	sp3LF-p/11	wind+ice	**0,00**
B239	sp3LF/12	wind+ice	**0,00**
B239	1a/19	wind;10	**-0,09**
B240	sp3R/24	wind+ice	**0,00**
B240	1a/56	wind;10	**-0,09**
B241	sp3LR/196	wind+ice	**0,00**
B241	sp4LF/195	maintenance	**0,00**
B242	sp3LF-p/11	wind+ice	**0,00**
B242	sp3LR/196	wind+ice	**0,00**
B243	1a/19	wind;10	**-0,09**
B243	sp3LR/1	wind+ice	**0,00**
B244	1a/66	wind;10	**-0,09**
B244	sp3R/17	wind+ice	**0,00**
B245	sp3LF/12	wind+ice	**0,00**
B245	1a/19	wind;10	**-0,12**
B246	1a/19	wind;10	**-0,12**
B246	sp3LF/12	wind+ice	**0,00**
B247	sp3R/45	wind+ice	**0,00**

Staaf	BG	Geval beschrijving	N [kN]
B247	1a/56	wind;10	**-0,12**
C5	sp3R/17	wind+ice	**-1488,58**
C5	sp3F-p/34	wind+ice	**1291,38**
C6	sp3R/45	wind+ice	**-1460,44**
C6	sp3F-p/60	wind+ice	**1097,35**
C7	sp3R-p/5	wind+ice	**1184,77**
C7	sp3F/14	wind+ice	**-1374,10**
C8	sp3F/61	wind+ice	**-1568,46**
C8	sp3R-p/55	wind+ice	**1212,95**
C9	sp3R/17	wind+ice	**-1400,50**
C9	sp3F-p/34	wind+ice	**1210,73**
C10	sp3F-p/60	wind+ice	**1031,67**
C10	sp3R/45	wind+ice	**-1374,75**
C11	sp3F/14	wind+ice	**-1296,07**
C11	sp3R-p/5	wind+ice	**1111,92**
C12	sp3R-p/55	wind+ice	**1137,80**
C12	sp3F/61	wind+ice	**-1473,98**
C13	sp3F-p/34	wind+ice	**952,01**
C13	sp3R/17	wind+ice	**-1123,28**
C14	sp3R/45	wind+ice	**-1102,35**
C14	sp3F-p/60	wind+ice	**800,64**
C15	sp3F/14	wind+ice	**-1040,76**
C15	sp3R-p/5	wind+ice	**865,90**
C16	sp3R-p/55	wind+ice	**887,28**
C16	sp3F/61	wind+ice	**-1185,13**
C17	sp3F-p/34	wind+ice	**769,91**
C17	sp3R/17	wind+ice	**-935,99**
C18	sp3R/45	wind+ice	**-921,15**
C18	sp3F-p/60	wind+ice	**649,70**
C19	sp3R-p/5	wind+ice	**699,72**
C19	sp3F/14	wind+ice	**-876,05**
C20	sp3R-p/55	wind+ice	**716,07**
C20	sp3F/61	wind+ice	**-981,56**
C29	sp3R/17	wind+ice	**-1574,09**
C29	sp3F-p/34	wind+ice	**1344,49**
C30	sp3R/45	wind+ice	**-1544,62**
C30	sp3F-p/60	wind+ice	**1141,59**
C31	sp3R-p/5	wind+ice	**1233,00**
C31	sp3F/14	wind+ice	**-1454,24**
C32	sp3F/61	wind+ice	**-1657,72**
C32	sp3R-p/55	wind+ice	**1262,46**
S2	sp3F-p/2	wind+ice	**19,63**
S2	sp3LR/1	wind+ice	**-19,86**
S3	sp3LR/3	wind+ice	**12,08**
S3	sp3F-p/2	wind+ice	**-12,35**
S4	sp3R-p/5	wind+ice	**18,58**
S4	sp3F/4	wind+ice	**-20,30**
S5	sp3F/4	wind+ice	**12,57**
S5	sp3R-p/6	wind+ice	**-11,68**
S6	3/8	wind+ice	**1,72**
S6	sp3R-p/7	wind+ice	**-0,91**
S7	sp3R-p/7	wind+ice	**9,16**
S7	sp3F/9	wind+ice	**-10,10**
S8	sp3F/9	wind+ice	**13,63**
S8	sp3R-p/7	wind+ice	**-12,70**
S9	sp3LF-p/11	wind+ice	**9,12**
S9	sp3LR/10	wind+ice	**-9,46**
S10	sp3LR/10	wind+ice	**12,66**
S10	sp3LF-p/11	wind+ice	**-12,59**
S11	3-p/13	wind+ice	**0,92**
S11	sp3LF/12	wind+ice	**-2,09**
S12	sp3F/14	wind+ice	**0,49**
S12	3-p/13	wind+ice	**-0,29**
S13	1a-p/16	wind;10	**0,16**
S13	1a/15	wind;10	**-1,60**
S14	1a/15	wind;10	**0,66**
S14	1a-p/16	wind;10	**-0,15**

Staaf	BG	Geval beschrijving	N [kN]
S15	1a-p/16	wind;10	**0,30**
S15	1a/15	wind;10	**-1,78**
S16	1a/15	wind;10	**1,10**
S16	1a-p/16	wind;10	**-0,21**
S17	1a-p/16	wind;10	**0,57**
S17	sp3R/17	wind+ice	**-2,25**
S18	sp3R/17	wind+ice	**0,59**
S18	sp3LF-p/18	wind+ice	**-0,16**
S19	1a-p/20	wind;10	**0,18**
S19	1a/19	wind;10	**-1,42**
S20	1a/15	wind;10	**0,64**
S20	1a-p/16	wind;10	**-0,16**
S21	1a-p/20	wind;10	**0,37**
S21	1a/19	wind;10	**-2,08**
S22	1a/19	wind;10	**1,06**
S22	1a-p/20	wind;10	**-0,19**
S23	sp3LR-p/21	wind+ice	**9,06**
S23	sp3LF/12	wind+ice	**-10,11**
S24	sp3F/9	wind+ice	**11,11**
S24	sp3R-p/7	wind+ice	**-9,27**
S25	sp1aF-p/23	wind;10	**-4,77**
S25	3/22	wind+ice	**-13,78**
S26	sp3F-p/25	wind+ice	**115,16**
S26	sp3R/24	wind+ice	**-119,86**
S27	sp3R-p/27	wind+ice	**98,77**
S27	sp3F/26	wind+ice	**-110,19**
S28	sp3F/26	wind+ice	**-128,02**
S28	sp3R-p/27	wind+ice	**117,51**
S29	sp3R/24	wind+ice	**-102,66**
S29	sp3F-p/25	wind+ice	**95,58**
S30	sp3LF-p/18	wind+ice	**-0,63**
S30	sp3LR/1	wind+ice	**2,00**
S31	sp3R-p/27	wind+ice	**-69,41**
S31	sp3F/26	wind+ice	**76,54**
S34	sp3R/28	wind+ice	**-66,54**
S34	sp3F-p/29	wind+ice	**67,76**
S35	3/30	wind+ice	**-23,73**
S35	sp3LR-p/21	wind+ice	**-7,13**
S36	sp3F-p/25	wind+ice	**-67,00**
S36	sp3R/24	wind+ice	**70,91**
S37	sp3LR/32	wind+ice	**271,23**
S37	sp3LF/31	wind+ice	**-283,32**
S38	sp3F/14	wind+ice	**8,96**
S38	sp3R-p/5	wind+ice	**-2,19**
S40	sp3LF-p/33	wind+ice	**272,61**
S40	sp3LR/32	wind+ice	**-281,52**
S41	sp3R/17	wind+ice	**8,93**
S41	sp3F-p/34	wind+ice	**-3,15**
S42	sp3F-p/34	wind+ice	**4,49**
S42	sp3R/17	wind+ice	**-10,76**
S43	sp3RR-p/36	wind+ice	**0,61**
S43	sp3RF/35	wind+ice	**-0,57**
S44	sp3RR/37	wind+ice	**-17,19**
S44	sp3RF-p/38	wind+ice	**11,61**
S47	sp3R/39	wind+ice	**-109,26**
S47	sp3F-p/40	wind+ice	**74,64**
S48	sp3R-p/42	wind+ice	**72,08**
S48	sp3F/41	wind+ice	**-114,55**
S49	sp3R-p/42	wind+ice	**62,53**
S49	sp3F/41	wind+ice	**-104,71**
S51	sp3R-p/5	wind+ice	**8,08**
S51	sp3F/14	wind+ice	**-10,80**
S52	sp3F/14	wind+ice	**9,44**
S52	sp3R-p/5	wind+ice	**-7,87**
S54	1a-p/44	wind;10	**5,08**
S54	1a/43	wind;10	**-4,41**
S55	sp3F-p/34	wind+ice	**10,53**

D&C ENGINEERING	Project	- 150 kV lijn Leiden - Zoetermeer
	Onderdeel	- berekening Mast 55
	Omschrijving	- ontwerpberekening
	Nationale norm	EC - EN
	Auteur	- SMA

Staaf	BG	Geval beschrijving	N [kN]
S55	sp3R/17	wind+ice	-13,56
S56	sp3R/17	wind+ice	11,09
S56	sp3F-p/34	wind+ice	-9,79
S61	sp3R-p/42	wind+ice	63,91
S61	sp3F/41	wind+ice	-106,32
S65	sp3F-p/25	wind+ice	18,89
S65	sp3R/45	wind+ice	-19,75
S66	sp3R/24	wind+ice	12,06
S66	sp3F-p/25	wind+ice	-11,99
S67	sp3RR-p/47	wind+ice	18,77
S67	sp3RF/46	wind+ice	-20,99
S68	sp3RF/46	wind+ice	12,78
S68	sp3RR-p/48	wind+ice	-11,77
S69	sp3R/50	wind+ice	1,05
S69	3-p/49	wind+ice	-1,54
S70	sp3RF/51	wind+ice	-9,36
S70	sp3RR-p/52	wind+ice	9,11
S71	sp3RR-p/52	wind+ice	-12,63
S71	sp3RF/51	wind+ice	12,46
S72	sp3R/50	wind+ice	-9,53
S72	sp3F-p/53	wind+ice	9,83
S73	sp3F-p/53	wind+ice	-13,65
S73	sp3R/50	wind+ice	12,78
S74	3/54	wind+ice	-2,94
S74	sp3R-p/55	wind+ice	0,45
S75	3/54	wind+ice	0,74
S75	sp3R-p/55	wind+ice	-0,19
S76	1a/56	wind;10	-1,43
S76	1a-p/57	wind;10	0,18
S77	1a/59	wind;10	0,67
S77	1a-p/58	wind;10	-0,15
S78	1a/56	wind;10	-2,12
S78	1a-p/57	wind;10	0,37
S79	1a/56	wind;10	1,09
S79	1a-p/57	wind;10	-0,19
S80	sp3RR/37	wind+ice	-2,38
S80	sp3RF-p/38	wind+ice	0,38
S81	sp3F-p/60	wind+ice	-0,12
S81	3/54	wind+ice	0,57
S82	1a-p/58	wind;10	0,22
S82	1a/59	wind;10	-1,57
S83	1a-p/58	wind;10	-0,15
S83	1a/59	wind;10	0,66
S84	1a-p/58	wind;10	0,29
S84	1a/59	wind;10	-1,81
S85	1a/59	wind;10	1,14
S85	1a-p/58	wind;10	-0,19
S86	sp3R-p/55	wind+ice	9,13
S86	sp3F/61	wind+ice	-11,68
S87	sp3RF/51	wind+ice	9,51
S87	sp3RR-p/52	wind+ice	-9,27
S88	3/62	wind+ice	-14,00
S88	sp1aRF-p/63	wind;10	-4,99
S89	sp3F-p/2	wind+ice	118,97
S89	sp3R/64	wind+ice	-119,23
S90	sp3R-p/5	wind+ice	96,56
S90	sp3F/14	wind+ice	-97,97
S91	sp3R-p/6	wind+ice	115,25
S91	sp3F/4	wind+ice	-114,98
S92	sp3F-p/2	wind+ice	100,90
S92	sp3R/17	wind+ice	-102,30
S93	sp3RR-p/47	wind+ice	-0,48
S93	sp3RF/65	wind+ice	2,22
S94	1a/66	wind;10	-7,68
S94	1a-p/67	wind;10	7,03
S95	1a/66	wind;10	7,52
S95	1a/68	wind;10	-7,15

Staaf	BG	Geval beschrijving	N [kN]
S96	1a/66	wind;10	-3,82
S96	1a-p/67	wind;10	3,40
S97	1a/68	wind;10	-3,63
S97	1a-p/69	wind;10	3,61
S98	1a-p/69	wind;10	4,17
S98	1a/66	wind;10	-4,70
S99	1a/68	wind;10	-2,29
S99	1a-p/69	wind;10	2,20
S100	sp3R/17	wind+ice	-62,04
S100	1a-p/44	wind;10	18,06
S101	1a-p/44	wind;10	-24,28
S101	sp3R/17	wind+ice	56,94
S102	1a/43	wind;10	-37,32
S102	1a-p/44	wind;10	50,97
S103	1a/68	wind;10	-2,48
S103	1a-p/69	wind;10	2,29
S104	1a/59	wind;10	3,04
S104	1a-p/58	wind;10	-0,31
S105	1a-p/67	wind;10	2,28
S105	1a/66	wind;10	-2,47
S107	1a-p/44	wind;10	13,01
S107	sp3R/17	wind+ice	-63,42
S108	1a-p/57	wind;10	-0,38
S108	1a/56	wind;10	3,25
S109	sp3R/17	wind+ice	60,01
S109	1a-p/44	wind;10	-19,55
S110	1a-p/44	wind;10	47,33
S110	1a/43	wind;10	-39,20
S111	3/54	wind+ice	-82,64
S111	1a-p/70	wind;10	2,23
S112	1a-p/70	wind;10	-7,46
S112	3/54	wind+ice	78,90
S113	1a/71	wind;10	-57,36
S113	1a-p/70	wind;10	31,03
S114	1a-p/69	wind;10	2,50
S114	1a/68	wind;10	-2,81
S115	sp3R/17	wind+ice	2,64
S115	1a-p/20	wind;10	-0,88
S116	1a-p/67	wind;10	2,62
S116	1a/66	wind;10	-2,68
S118	1a-p/70	wind;10	1,41
S118	3/54	wind+ice	-80,11
S119	1a/15	wind;10	2,81
S119	1a-p/16	wind;10	-1,06
S120	3/54	wind+ice	76,79
S120	1a-p/70	wind;10	-7,05
S121	sp1aR/72	wind;10	3,35
S121	1a-p/69	wind;10	-0,81
S122	1a-p/69	wind;10	3,07
S122	1a/68	wind;10	-3,15
S123	1a-p/67	wind;10	2,96
S123	1a/66	wind;10	-3,28
S125	1a/66	wind;10	3,53
S125	sp1aR-p/73	wind;10	-0,64
S126	1a-p/70	wind;10	32,54
S126	1a/71	wind;10	-54,18
S129	3/30	wind+ice	53,65
S129	1a-p/16	wind;10	25,31
S130	3/30	wind+ice	54,19
S130	sp3LF-p/18	wind+ice	27,01
S131	1a-p/70	wind;10	56,67
S131	1a/71	wind;10	-131,66
S132	1a-p/70	wind;10	60,48
S132	1a/71	wind;10	-123,36
S133	sp3LR-p/75	wind+ice	0,10
S133	sp3LF/74	wind+ice	-0,27
S134	sp3LF-p/77	wind+ice	0,09

Staaf	BG	Geval beschrijving	N [kN]
S134	sp3LR/76	wind+ice	-0,17
S135	1a-p/44	wind;10	93,04
S135	1a/43	wind;10	-83,25
S136	sp3F/9	wind+ice	3,53
S136	sp3R-p/7	wind+ice	-2,22
S137	3/30	wind+ice	59,71
S137	1a-p/20	wind;10	28,19
S138	3/30	wind+ice	60,31
S138	sp3LR-p/21	wind+ice	30,15
S139	1a/71	wind;10	92,22
S139	1a-p/70	wind;10	-56,01
S140	1a-p/44	wind;10	91,10
S140	1a/43	wind;10	-83,70
S141	1a/71	wind;10	97,66
S141	1a-p/70	wind;10	-52,92
S142	3/54	wind+ice	55,15
S142	1a-p/58	wind;10	26,20
S143	sp3RF-p/38	wind+ice	27,56
S143	3/54	wind+ice	54,96
S144	1a-p/44	wind;10	99,80
S144	sp3R/17	wind+ice	-90,68
S145	1a-p/44	wind;10	92,02
S145	1a/43	wind;10	-91,06
S146	sp3RR-p/36	wind+ice	0,41
S146	sp3F/14	wind+ice	-0,84
S147	sp3RR/78	wind+ice	-0,25
S147	sp3RF-p/79	wind+ice	0,14
S148	1a-p/70	wind;10	56,01
S148	1a/71	wind;10	-119,40
S149	sp3R/50	wind+ice	3,55
S149	sp3F-p/53	wind+ice	-3,40
S150	sp3F/80	wind+ice	2,92
S150	sp3RR-p/52	wind+ice	-2,34
S151	3/54	wind+ice	60,86
S151	sp3RR-p/47	wind+ice	29,02
S152	3/54	wind+ice	61,01
S152	sp3RR-p/47	wind+ice	30,33
S153	1a/43	wind;10	68,10
S153	1a-p/44	wind;10	-78,99
S154	1a-p/70	wind;10	59,95
S154	1a/71	wind;10	-113,77
S155	1a/43	wind;10	63,60
S155	1a-p/44	wind;10	-86,31
S156	sp3F/4	wind+ice	67,78
S156	sp3R-p/6	wind+ice	-67,68
S159	3/22	wind+ice	152,44
S159	sp1aLF-p/81	wind;10	78,04
S160	3/62	wind+ice	153,53
S160	sp1aRF-p/82	wind;10	78,72
S162	1a-p/44	wind;10	208,69
S162	sp3RF/35	wind+ice	-194,65
S164	1a-p/70	wind;10	141,60
S164	1a/71	wind;10	-255,64
S166	3/84	wind+ice	111,91
S166	sp1aLR-p/83	wind;10	58,93
S167	sp3F-p/25	wind+ice	30,78
S167	sp3LR/76	wind+ice	-39,24
S168	sp3LR/76	wind+ice	18,41
S168	sp3LF-p/85	wind+ice	-14,26
S169	sp3R-p/27	wind+ice	31,47
S169	sp3F/26	wind+ice	-38,81
S170	sp3LF/86	wind+ice	18,18
S170	sp3R-p/27	wind+ice	-14,60
S171	sp3R-p/55	wind+ice	41,17
S171	sp3F/61	wind+ice	-120,79
S172	sp3F-p/60	wind+ice	36,49
S172	sp3R/45	wind+ice	-120,95

D&C ENGINEERING	Project	- 150 kV lijn Leiden - Zoetermeer
	Onderdeel	- berekening Mast 55
	Omschrijving	- ontwerpberekening
	Nationale norm	EC - EN
	Auteur	- SMA

Staaf	BG	Geval beschrijving	N [kN]
S175	3/30	wind+ice	**41,12**
S175	sp3LF-p/87	wind+ice	**-0,77**
S176	sp3R-p/5	wind+ice	**692,03**
S176	sp3F/14	wind+ice	**-830,29**
S177	sp3F-p/34	wind+ice	**762,49**
S177	sp3R/17	wind+ice	**-895,05**
S178	sp3RF-p/89	wind+ice	**8,86**
S178	sp3RR/88	wind+ice	**-6,70**
S179	sp3RR/91	wind+ice	**7,21**
S179	sp3LR-p/90	wind+ice	**-8,41**
S180	sp1aR/93	wind;10	**37,36**
S180	sp1aF-p/92	wind;10	**-36,95**
S181	sp3F/41	wind+ice	**38,86**
S181	sp1aR-p/94	wind;10	**-36,52**
S182	sp3R-p/27	wind+ice	**37,22**
S182	sp3F/26	wind+ice	**-40,40**
S183	sp3F/61	wind+ice	**39,75**
S183	sp3R-p/55	wind+ice	**-36,79**
S184	sp3F-p/40	wind+ice	**37,89**
S184	sp3R/39	wind+ice	**-38,05**
S185	sp3R/45	wind+ice	**37,06**
S185	sp3F-p/25	wind+ice	**-36,89**
S189	3-p/96	wind+ice	**71,28**
S189	sp3LF/95	wind+ice	**-3,06**
S190	sp3F-p/2	wind+ice	**32,97**
S190	sp3R/17	wind+ice	**-39,10**
S191	sp3R/17	wind+ice	**18,29**
S191	sp3RF-p/97	wind+ice	**-15,37**
S192	sp3RR-p/98	wind+ice	**31,29**
S192	sp3F/4	wind+ice	**-39,42**
S193	sp3RF/99	wind+ice	**18,40**
S193	sp3RR-p/98	wind+ice	**-14,57**
S194	sp3R-p/5	wind+ice	**40,84**
S194	sp3F/14	wind+ice	**-113,63**
S195	sp3F-p/34	wind+ice	**39,08**
S195	sp3R/17	wind+ice	**-121,81**
S198	sp3R/39	wind+ice	**36,15**
S198	sp3F-p/40	wind+ice	**-35,12**
S199	sp3F/41	wind+ice	**34,95**
S199	sp3R-p/6	wind+ice	**-35,19**
S200	sp3R-p/6	wind+ice	**37,46**
S200	sp3F/41	wind+ice	**-37,70**
S201	sp3R-p/5	wind+ice	**-36,80**
S201	sp3F/14	wind+ice	**36,80**
S202	sp3F-p/40	wind+ice	**37,49**
S202	sp3R/39	wind+ice	**-38,76**
S203	sp3R/64	wind+ice	**37,55**
S203	sp3F-p/2	wind+ice	**-36,22**
S206	sp3RF/100	wind+ice	**-9,06**
S206	sp1aLF-p/101	wind;10	**7,11**
S207	sp3LR-p/103	wind+ice	**8,75**
S207	sp1aRR/102	wind;10	**-7,48**
S209	3-p/13	wind+ice	**72,33**
S209	sp3LF/104	wind+ice	**-3,10**
S211	1a-p/44	wind;10	**-2,80**
S211	3/30	wind+ice	**11,86**
S212	3/54	wind+ice	**15,03**
S212	1a-p/70	wind;10	**-0,41**
S214	1a-p/69	wind;10	**3,02**
S214	1a/68	wind;10	**-2,82**
S215	1a/68	wind;10	**-2,26**
S215	1a-p/69	wind;10	**1,62**
S216	1a-p/69	wind;10	**0,33**
S216	1a/66	wind;10	**-1,89**
S217	1a/66	wind;10	**-1,69**
S217	1a-p/67	wind;10	**1,19**
S218	1a/66	wind;10	**1,48**

Staaf	BG	Geval beschrijving	N [kN]
S218	1a-p/67	wind;10	**-1,37**
S219	1a/66	wind;10	**-3,34**
S219	1a-p/67	wind;10	**2,50**
S220	1a-p/67	wind;10	**1,93**
S220	1a/66	wind;10	**-1,92**
S223	1a-p/69	wind;10	**0,36**
S223	1a/66	wind;10	**-1,86**
S224	sp3LR/1	wind+ice	**135,05**
S224	1a-p/44	wind;10	**-161,93**
S225	1a-p/44	wind;10	**153,18**
S225	sp3LR/1	wind+ice	**-137,51**
S226	1a/71	wind;10	**185,01**
S226	1a-p/70	wind;10	**-108,60**
S227	sp3LR-p/75	wind+ice	**101,51**
S227	1a/71	wind;10	**-187,24**
S228	3/105	wind+ice	**82,81**
S228	sp3F-p/25	wind+ice	**42,93**
S229	3/105	wind+ice	**-13,53**
S229	sp3F-p/25	wind+ice	**-7,19**
S230	sp3F-p/2	wind+ice	**44,26**
S230	3/84	wind+ice	**85,47**
S231	sp3F-p/2	wind+ice	**42,93**
S231	3/84	wind+ice	**82,87**
S232	sp1aRF-p/82	wind;10	**34,06**
S232	3/62	wind+ice	**65,85**
S233	sp3F-p/2	wind+ice	**-7,19**
S233	3/84	wind+ice	**-13,55**
S234	3/105	wind+ice	**85,65**
S234	sp3F-p/25	wind+ice	**44,39**
S235	3/62	wind+ice	**59,81**
S235	sp4R-p/106	maintenance	**31,82**
S236	3/84	wind+ice	**48,44**
S236	sp1aLR-p/83	wind;10	**25,85**
S237	sp4R-p/106	maintenance	**-5,52**
S237	3/62	wind+ice	**-10,05**
S238	3/22	wind+ice	**61,97**
S238	sp4R-p/107	maintenance	**33,01**
S239	1a/43	wind;10	**130,48**
S239	1a-p/44	wind;10	**-163,23**
S240	1a-p/44	wind;10	**152,88**
S240	sp3RR/78	wind+ice	**-134,11**
S241	1a/71	wind;10	**180,60**
S241	1a-p/70	wind;10	**-113,08**
S242	1a-p/70	wind;10	**104,27**
S242	1a/71	wind;10	**-182,12**
S243	sp3F-p/2	wind+ice	**-63,14**
S243	sp3R/17	wind+ice	**69,15**
S245	sp3F-p/109	wind+ice	**58,36**
S245	sp3R/108	wind+ice	**-64,91**
S247	sp3F/61	wind+ice	**10,06**
S247	sp3R-p/55	wind+ice	**-2,24**
S248	sp3R-p/55	wind+ice	**3,36**
S248	sp3F/61	wind+ice	**-12,17**
S249	sp3R-p/55	wind+ice	**9,59**
S249	sp3F/61	wind+ice	**-14,25**
S250	sp3F/61	wind+ice	**11,72**
S250	sp3R-p/55	wind+ice	**-8,95**
S252	sp3F-p/40	wind+ice	**237,52**
S252	sp3RR/88	wind+ice	**-254,59**
S253	3/22	wind+ice	**59,68**
S253	sp4R-p/110	maintenance	**31,81**
S254	3/105	wind+ice	**48,94**
S254	sp1aRR-p/111	wind;10	**25,87**
S255	sp3R-p/6	wind+ice	**-5,49**
S255	3/22	wind+ice	**-10,00**
S256	3/62	wind+ice	**61,73**
S256	sp4R-p/112	maintenance	**32,90**

Staaf	BG	Geval beschrijving	N [kN]
S257	sp1aRR-p/113	wind;10	**-7,43**
S257	3/54	wind+ice	**-24,72**
S258	3/105	wind+ice	**112,40**
S258	sp1aRR-p/111	wind;10	**58,62**
S260	sp3R/45	wind+ice	**8,82**
S260	sp3F-p/60	wind+ice	**-2,05**
S263	sp4LF-p/114	maintenance	**43,42**
S263	sp3LR/32	wind+ice	**-46,32**
S264	sp3LR/1	wind+ice	**45,68**
S264	sp4LF-p/115	maintenance	**-43,42**
S265	sp3LR/32	wind+ice	**-45,68**
S265	sp4LF-p/114	maintenance	**42,97**
S266	sp4LF/116	maintenance	**-47,70**
S266	sp4LR-p/117	maintenance	**41,60**
S267	sp4LR-p/118	maintenance	**-41,38**
S267	sp4LF/119	maintenance	**47,51**
S268	1a-p/69	wind;10	**1,75**
S268	1a-p/69	wind;10	**-1,80**
S273	sp3LF/31	wind+ice	**-43,99**
S273	sp4LR-p/120	maintenance	**37,22**
S274	sp3LF-p/33	wind+ice	**-16,99**
S274	sp3LR/32	wind+ice	**21,36**
S275	sp3LF/31	wind+ice	**-12,86**
S275	sp4LR-p/120	maintenance	**11,31**
S278	sp3LF-p/33	wind+ice	**35,02**
S278	sp3LR/121	wind+ice	**-45,09**
S279	sp4LR-p/120	maintenance	**-18,03**
S279	sp3LF/31	wind+ice	**20,82**
S280	sp3LR/32	wind+ice	**-13,19**
S280	sp3LF-p/33	wind+ice	**10,69**
S283	sp3LF-p/122	wind+ice	**6,49**
S283	3/54	wind+ice	**84,97**
S287	sp3F-p/60	wind+ice	**-0,31**
S287	sp3F/61	wind+ice	**0,72**
S288	sp3LF-p/85	wind+ice	**33,15**
S288	sp3LR/76	wind+ice	**-58,76**
S289	sp3LF-p/85	wind+ice	**82,94**
S289	sp3R/45	wind+ice	**-224,53**
S290	sp3RF-p/89	wind+ice	**22,29**
S290	sp3RR/88	wind+ice	**-28,89**
S291	sp4RR-p/124	maintenance	**24,63**
S291	sp3RF/123	wind+ice	**-26,72**
S292	sp3RF/99	wind+ice	**25,93**
S292	sp4RR-p/125	maintenance	**-24,75**
S295	sp3RF-p/97	wind+ice	**85,53**
S295	sp3RR/78	wind+ice	**-226,14**
S296	1a-p/67	wind;10	**1,16**
S296	1a/66	wind;10	**-1,72**
S297	1a/66	wind;10	**1,46**
S297	1a-p/67	wind;10	**-1,37**
S298	sp3RR/126	wind+ice	**135,92**
S298	sp3R-p/27	wind+ice	**-95,15**
S300	sp3R/64	wind+ice	**70,85**
S300	sp3F-p/2	wind+ice	**-70,81**
S301	sp3F-p/60	wind+ice	**3,25**
S301	sp3R/45	wind+ice	**-10,90**
S302	sp3RF-p/89	wind+ice	**36,70**
S302	sp3RR/127	wind+ice	**-44,95**
S303	sp3RF/123	wind+ice	**21,21**
S303	sp4RR-p/128	maintenance	**-17,91**
S304	sp3RF-p/89	wind+ice	**11,18**
S304	sp3RR/88	wind+ice	**-13,15**
S307	sp4RR-p/128	maintenance	**36,98**
S307	sp3RF/123	wind+ice	**-44,77**
S308	sp3RR/88	wind+ice	**21,29**
S308	sp3RF-p/89	wind+ice	**-17,78**
S309	sp4RR-p/128	maintenance	**11,24**

D&C ENGINEERING	Project	- 150 kV lijn Leiden - Zoetermeer
	Onderdeel	- berekening Mast 55
	Omschrijving	- ontwerpberekening
	Nationale norm	EC - EN
	Auteur	- SMA

Staaf	BG	Geval beschrijving	N [kN]
S309	sp3RF/123	wind+ice	-13,11
S312	3/30	wind+ice	83,94
S312	sp3LF-p/87	wind+ice	6,66
S318	sp4RR-p/124	maintenance	24,79
S318	sp3RF/123	wind+ice	-26,77
S319	sp3RF-p/89	wind+ice	21,74
S319	sp4RR/129	maintenance	-29,26
S320	sp4RR/129	maintenance	29,10
S320	sp3RF-p/130	wind+ice	-21,42
S321	1a-p/58	wind;10	1,03
S321	1a/59	wind;10	-1,20
S324	3-p/131	wind+ice	71,44
S324	sp3R/64	wind+ice	-2,15
S328	sp3RF-p/79	wind+ice	212,07
S328	sp3RR/78	wind+ice	-207,82
S330	sp3RF-p/79	wind+ice	0,51
S330	sp3RR/78	wind+ice	-0,51
S331	sp3RR-p/47	wind+ice	13,37
S331	sp3RF/65	wind+ice	-17,49
S332	sp3RR/78	wind+ice	226,59
S332	sp3RF-p/79	wind+ice	-249,08
S333	sp3F-p/60	wind+ice	7,45
S333	sp3R/45	wind+ice	-11,30
S334	sp3R/45	wind+ice	9,91
S334	sp3F-p/60	wind+ice	-7,29
S336	sp3F-p/40	wind+ice	64,81
S336	sp3R/39	wind+ice	-99,93
S340	sp3R-p/5	wind+ice	68,93
S340	sp3F/4	wind+ice	-248,72
S341	sp3R-p/55	wind+ice	707,08
S341	sp3F/61	wind+ice	-939,90
S342	sp3F-p/60	wind+ice	636,57
S342	sp3R/45	wind+ice	-883,03
S343	3/54	wind+ice	41,86
S343	sp3LF-p/122	wind+ice	-0,77
S345	sp3LF/74	wind+ice	-322,86
S345	sp3LR-p/75	wind+ice	219,84
S347	sp3RF/35	wind+ice	-231,63
S347	sp3LF/132	wind+ice	301,42
S349	sp3RF-p/79	wind+ice	281,97
S349	sp3RR/78	wind+ice	-252,40
S351	sp3RR/78	wind+ice	232,17
S351	1a/71	wind;10	-288,14
S355	sp3F/14	wind+ice	-828,41
S355	sp3R-p/5	wind+ice	693,43
S356	sp3LF/86	wind+ice	-624,57
S356	sp3LR-p/157	wind+ice	338,51
S359	sp3LF/74	wind+ice	-244,67
S359	sp3R-p/55	wind+ice	167,14
S360	sp3R-p/55	wind+ice	169,45
S360	sp3LF/74	wind+ice	-246,26
S361	sp3R-p/5	wind+ice	80,49
S361	sp3F/14	wind+ice	-98,23
S365	sp3F-p/34	wind+ice	764,96
S365	sp3R/17	wind+ice	-894,18
S366	sp3LR/121	wind+ice	-584,16
S366	sp3LF-p/85	wind+ice	340,04
S367	sp3LF-p/85	wind+ice	349,23
S367	sp3LR/121	wind+ice	-592,64
S368	sp3F-p/2	wind+ice	297,67
S368	sp3R/64	wind+ice	-441,27
S369	sp3F-p/2	wind+ice	317,23
S369	sp3R/64	wind+ice	-413,66
S370	sp3LR/76	wind+ice	-240,21
S370	sp3LF-p/77	wind+ice	160,65
S371	sp3LF-p/77	wind+ice	162,53
S371	sp3LR/76	wind+ice	-241,32

Staaf	BG	Geval beschrijving	N [kN]
S372	sp3LF-p/18	wind+ice	76,82
S372	sp3LR/1	wind+ice	-106,52
S373	sp3F-p/34	wind+ice	77,71
S373	sp3LR/1	wind+ice	-104,88
S377	sp3LR/76	wind+ice	246,39
S377	sp3LF-p/77	wind+ice	-132,18
S379	sp3LF/74	wind+ice	284,93
S379	sp3LR-p/75	wind+ice	-146,72
S381	sp3RR/78	wind+ice	227,06
S381	sp3RF-p/79	wind+ice	-197,64
S383	sp3RF/35	wind+ice	217,42
S383	sp3RR-p/36	wind+ice	-177,19
S386	sp3F/61	wind+ice	-185,85
S386	sp3RR-p/36	wind+ice	136,48
S395	sp3LR-p/75	wind+ice	69,69
S395	sp3LF/86	wind+ice	-262,41
S397	sp3R-p/5	wind+ice	3,15
S397	sp3F/14	wind+ice	-11,39
S398	sp3LR-p/157	wind+ice	348,52
S398	sp3LF/86	wind+ice	-633,51
S400	sp3LR-p/142	wind+ice	41,46
S400	sp3LF/31	wind+ice	-46,74
S401	sp3R/24	wind+ice	69,02
S401	sp3F-p/25	wind+ice	-58,48
S402	sp3R-p/6	wind+ice	266,16
S402	sp3F/4	wind+ice	-432,88
S405	sp3RF-p/89	wind+ice	169,09
S405	sp3RR/88	wind+ice	-174,49
S408	sp3RR-p/36	wind+ice	372,26
S408	sp3RF/35	wind+ice	-579,31
S409	sp3R-p/55	wind+ice	268,64
S409	sp3F/26	wind+ice	-458,36
S411	sp3RR-p/36	wind+ice	175,31
S411	sp3RF/35	wind+ice	-224,26
S412	sp3RR-p/36	wind+ice	177,71
S412	sp3RF/35	wind+ice	-225,85
S413	sp3RR-p/47	wind+ice	80,86
S413	sp3RF/65	wind+ice	-116,94
S414	sp3RR-p/47	wind+ice	81,75
S414	sp3RF/65	wind+ice	-115,31
S418	sp3F-p/60	wind+ice	637,78
S418	sp3R/45	wind+ice	-881,31
S419	sp3RR/78	wind+ice	-571,42
S419	sp3RF-p/79	wind+ice	372,67
S420	sp3RR/78	wind+ice	-579,49
S420	sp3RF-p/79	wind+ice	385,56
S421	sp3F-p/60	wind+ice	254,14
S421	sp3R/45	wind+ice	-435,02
S422	sp3F-p/60	wind+ice	273,64
S422	sp3R/45	wind+ice	-407,15
S424	sp3RF-p/79	wind+ice	187,29
S424	sp3R/17	wind+ice	-233,97
S425	sp3F-p/60	wind+ice	77,33
S425	sp3R/45	wind+ice	-104,18
S426	sp3F-p/60	wind+ice	78,16
S426	sp3R/45	wind+ice	-102,75
S430	1a-p/70	wind;10	4,18
S430	1a/71	wind;10	-5,24
S431	sp3R-p/55	wind+ice	709,25
S431	sp3F/61	wind+ice	-939,35
S432	sp3RR-p/36	wind+ice	359,73
S432	sp3RF/35	wind+ice	-572,54
S433	1a-p/44	wind;10	-239,93
S433	sp3RF/35	wind+ice	207,26
S435	sp3F/41	wind+ice	-249,96
S435	sp3RR/88	wind+ice	242,75
S445	1a/71	wind;10	106,73

Staaf	BG	Geval beschrijving	N [kN]
S445	1a-p/70	wind;10	-50,48
S447	sp3LR-p/21	wind+ice	89,73
S447	sp3F/14	wind+ice	-113,19
S448	3/22	wind+ice	65,14
S448	sp1aLF-p/81	wind;10	33,72
S450	sp3LF-p/77	wind+ice	0,49
S450	sp3LR/76	wind+ice	-0,63
S451	1a/71	wind;10	267,11
S451	sp3LF-p/77	wind+ice	-166,09
S453	sp3LR-p/75	wind+ice	0,26
S453	sp3LF/74	wind+ice	-0,40
S454	sp3LF/74	wind+ice	292,59
S454	sp3LR-p/75	wind+ice	-188,76
S456	1a/71	wind;10	2,85
S456	sp3F-p/109	wind+ice	-1,86
S457	sp3LF/74	wind+ice	-269,47
S457	sp3LR-p/75	wind+ice	149,96
S458	sp3LR-p/21	wind+ice	15,54
S458	sp3LF/12	wind+ice	-13,75
S459	sp3LF-p/18	wind+ice	16,60
S459	sp3LR/1	wind+ice	-15,31
S460	sp3R/39	wind+ice	-102,28
S460	sp3F-p/40	wind+ice	66,20
S461	sp3RF/35	wind+ice	5,69
S461	sp3RR-p/36	wind+ice	-3,30
S462	sp3RR/78	wind+ice	6,14
S462	sp3RF-p/79	wind+ice	-4,38
S463	sp3LF/74	wind+ice	6,12
S463	sp3R-p/55	wind+ice	-2,59
S464	sp3LF-p/77	wind+ice	-2,42
S464	sp3LR/76	wind+ice	6,07
S465	sp3R-p/55	wind+ice	35,74
S465	sp3F/26	wind+ice	-56,45
S467	sp3F-p/60	wind+ice	241,61
S467	sp3R/45	wind+ice	-334,99
S468	sp3F-p/34	wind+ice	292,00
S468	sp3R/17	wind+ice	-339,06
S469	sp3R/17	wind+ice	29,44
S469	sp3F-p/2	wind+ice	-24,51
S470	sp3F/14	wind+ice	26,39
S470	sp1aR-p/164	wind;10	-21,82
S471	sp3R-p/5	wind+ice	264,46
S471	sp3F/14	wind+ice	-312,50
S472	sp3F/61	wind+ice	-356,69
S472	sp3R-p/55	wind+ice	269,94
S473	sp3F/61	wind+ice	31,52
S473	sp3R-p/55	wind+ice	-22,44
S474	sp3R/45	wind+ice	28,12
S474	sp1aF-p/165	wind;10	-19,40
S479	sp3RR/91	wind+ice	173,35
S479	sp3RF/123	wind+ice	-169,60
S480	sp3LR/140	wind+ice	194,45
S480	sp3LF/31	wind+ice	-195,42
S481	sp3LF-p/33	wind+ice	194,53
S481	sp3LR/32	wind+ice	-194,60
S482	3/54	wind+ice	59,45
S482	sp3LF-p/122	wind+ice	-17,23
S483	3/54	wind+ice	35,58
S483	3-p/96	wind+ice	-16,94
S484	sp3LR/1	wind+ice	31,25
S484	3-p/13	wind+ice	-42,19
S485	3/30	wind+ice	40,09
S485	3-p/13	wind+ice	-12,79
S486	sp3R-p/5	wind+ice	81,36
S486	sp3F/14	wind+ice	-96,74
S487	sp3R-p/6	wind+ice	291,00
S487	sp3F/4	wind+ice	-396,69

D&C ENGINEERING	Project	- 150 kV lijn Leiden - Zoetermeer
	Onderdeel	- berekening Mast 55
	Omschrijving	- ontwerpberekening
	Nationale norm	EC - EN
	Auteur	- SMA

Staaf	BG	Geval beschrijving	N [kN]
S488	sp3LR/1	wind+ice	297,25
S488	1a-p/44	wind;10	-198,65
S491	sp3LF/12	wind+ice	246,80
S491	1a-p/44	wind;10	-214,88
S497	sp3F-p/34	wind+ice	100,67
S497	sp3R/17	wind+ice	-137,02
S501	1a-p/44	wind;10	-102,18
S501	1a/43	wind;10	101,51
S503	sp3R/17	wind+ice	111,22
S503	1a-p/44	wind;10	-90,34
S508	3/54	wind+ice	76,93
S508	sp3LF-p/122	wind+ice	1,62
S511	3/30	wind+ice	76,24
S511	sp3LF-p/87	wind+ice	1,62
S526	sp3LF-p/148	wind+ice	17,59
S526	sp3LR/140	wind+ice	-17,72
S527	sp3RR/166	wind+ice	-18,02
S527	sp3RF-p/167	wind+ice	17,02
S528	sp3LR/140	wind+ice	-17,28
S528	sp3RR-p/168	wind+ice	17,77
S529	sp3LR-p/103	wind+ice	17,51
S529	sp3LF/137	wind+ice	-17,91
S533	sp3LR/169	wind+ice	-0,27
S533	sp3RR-p/52	wind+ice	-0,19
S547	sp3RF-p/79	wind+ice	153,82
S547	sp3RR/78	wind+ice	-172,62
S548	3/30	wind+ice	75,47
S548	sp3LF-p/87	wind+ice	1,89
S551	3/54	wind+ice	76,08
S551	sp3LF-p/122	wind+ice	1,89
S588	sp3LR/76	wind+ice	0,00
S588	1a/68	wind;10	0,00
S589	1a/15	wind;10	0,00
S589	sp3RR/78	wind+ice	0,00
S590	sp3RF/46	wind+ice	0,00
S590	1a/43	wind;10	0,00
S591	1a/56	wind;10	0,00
S591	sp3RR-p/141	wind+ice	0,00
S592	sp3RF/35	wind+ice	0,00
S592	1a/66	wind;10	0,00
S593	1a/59	wind;10	0,00
S593	sp3LF/74	wind+ice	0,00
S594	sp3LR/3	wind+ice	0,00
S594	1a/71	wind;10	0,00
S595	1a/19	wind;10	0,00
S595	sp3LF/31	wind+ice	0,00
S596	sp3LF/74	wind+ice	0,08
S596	sp3LR-p/157	wind+ice	0,05
S597	sp3LF-p/197	wind+ice	-0,07
S597	sp3RF/158	wind+ice	-0,11
S598	sp3LF/134	wind+ice	145,49
S598	sp3LF-p/133	wind+ice	-110,32
S599	sp3LR/76	wind+ice	-57,89
S599	sp3LF-p/77	wind+ice	32,53
S600	sp3R-p/55	wind+ice	36,16
S600	sp3F/26	wind+ice	-57,50
S601	sp3RF-p/79	wind+ice	-0,37
S601	sp3RF/35	wind+ice	0,67
S602	sp3RF-p/97	wind+ice	36,61
S602	sp3R/17	wind+ice	-58,42
S603	sp3RR-p/36	wind+ice	35,32
S603	sp3RF/35	wind+ice	-56,08
S604	sp3F-p/34	wind+ice	35,58
S604	sp3R/17	wind+ice	-58,09
S605	sp3RR-p/36	wind+ice	36,17
S605	sp3RF/99	wind+ice	-56,60
S606	sp3F/61	wind+ice	-422,37

Staaf	BG	Geval beschrijving	N [kN]
S606	sp3R-p/55	wind+ice	293,65
S607	sp3R/17	wind+ice	-232,06
S607	sp3RF-p/79	wind+ice	184,38
S608	1a/71	wind;10	102,04
S608	sp3R-p/7	wind+ice	-64,16
S609	sp3F-p/60	wind+ice	72,51
S609	sp3R/45	wind+ice	-132,81
S610	sp3R-p/55	wind+ice	93,34
S610	sp3F/61	wind+ice	-150,05
S612	sp3F-p/34	wind+ice	155,49
S612	sp3R/17	wind+ice	-247,23
S615	sp3R/45	wind+ice	-241,24
S615	sp3F-p/60	wind+ice	106,72
S616	1a-p/69	wind;10	2,54
S616	1a/68	wind;10	-2,71
S617	sp4F-p/198	maintenance	1,65
S617	sp3R/24	wind+ice	108,74
S618	1a/71	wind;10	346,36
S618	1a-p/70	wind;10	-117,59
S619	sp3F/4	wind+ice	91,32
S619	sp4R-p/199	maintenance	-9,66
S620	sp3RF/65	wind+ice	335,74
S620	sp3RR-p/47	wind+ice	-154,13
S621	1a-p/67	wind;10	1,68
S621	1a/66	wind;10	-2,04
S624	sp3R-p/55	wind+ice	129,92
S624	sp3F/61	wind+ice	-282,52
S625	sp3R-p/5	wind+ice	122,97
S625	sp3F/14	wind+ice	-245,71
S626	1a/43	wind;10	73,54
S626	1a-p/44	wind;10	-86,17
S628	sp3R/39	wind+ice	98,87
S628	1a-p/70	wind;10	-53,74
S629	sp3R/39	wind+ice	98,54
S629	1a-p/44	wind;10	-82,88
S631	1a-p/69	wind;10	1,39
S631	1a/68	wind;10	-1,65
S632	sp3R-p/55	wind+ice	15,00
S632	1a/71	wind;10	-69,48
S633	1a-p/44	wind;10	25,53
S633	1a/43	wind;10	-54,39
S634	3/54	wind+ice	143,90
S634	1a-p/70	wind;10	-55,20
S635	1a-p/70	wind;10	12,04
S635	1a/71	wind;10	-73,23
S636	1a-p/44	wind;10	27,95
S636	sp3R/17	wind+ice	-60,22
S637	3/54	wind+ice	152,02
S637	1a-p/70	wind;10	-55,21
S638	1a-p/69	wind;10	1,87
S638	1a/66	wind;10	-2,18
S639	1a-p/67	wind;10	1,59
S639	1a/68	wind;10	-1,86
S640	1a/71	wind;10	105,37
S640	sp3R-p/55	wind+ice	-64,65
S641	sp3R/17	wind+ice	86,58
S641	1a-p/44	wind;10	-87,37
S642	sp3F/41	wind+ice	100,02
S642	1a-p/44	wind;10	-85,01
SB49	sp3F-p/2	wind+ice	-14,61
SB49	sp3R/64	wind+ice	17,42
SB50	sp3R/64	wind+ice	-12,97
SB50	sp3F-p/2	wind+ice	9,78
SB51	sp3R/24	wind+ice	17,29
SB51	sp3F-p/25	wind+ice	-14,13
SB52	sp3F-p/25	wind+ice	9,37
SB52	sp3R/24	wind+ice	-12,91

Staaf	BG	Geval beschrijving	N [kN]
SB53	1a/56	wind;10	11,28
SB53	sp3RF-p/38	wind+ice	-5,59
SB54	sp3RF-p/38	wind+ice	3,52
SB54	sp3RR/37	wind+ice	-8,73
SB55	sp3R-p/55	wind+ice	-6,58
SB55	sp3RF/65	wind+ice	11,77
SB56	sp3R-p/55	wind+ice	4,26
SB56	sp3RF/65	wind+ice	-9,11
SB57	sp3F/26	wind+ice	17,90
SB57	sp3R-p/27	wind+ice	-14,42
SB58	sp3R-p/27	wind+ice	9,64
SB58	sp3F/26	wind+ice	-13,32
SB59	sp3F/4	wind+ice	16,99
SB59	sp3R-p/6	wind+ice	-14,28
SB60	sp3R-p/6	wind+ice	9,49
SB60	sp3F/4	wind+ice	-12,69
SB61	sp3LF/12	wind+ice	9,68
SB61	1a-p/20	wind;10	-8,02
SB62	sp3LF/12	wind+ice	-7,64
SB62	1a-p/20	wind;10	5,19
SB63	sp3LR/1	wind+ice	10,48
SB63	sp3LF-p/18	wind+ice	-8,86
SB64	sp3LF-p/18	wind+ice	5,78
SB64	sp3LR/1	wind+ice	-8,23
SB65	sp3R/39	wind+ice	28,43
SB65	sp3F-p/40	wind+ice	-24,72
SB66	1a/71	wind;10	17,01
SB66	1a-p/70	wind;10	-9,56
SB67	1a/71	wind;10	17,22
SB67	1a-p/70	wind;10	-9,30
SB68	sp3F/41	wind+ice	28,41
SB68	sp3R-p/42	wind+ice	-24,69
SB69	sp3F/41	wind+ice	28,81
SB69	sp3R-p/42	wind+ice	-24,71
SB70	1a/43	wind;10	13,27
SB70	1a-p/44	wind;10	-13,35
SB71	1a/43	wind;10	13,25
SB71	1a-p/44	wind;10	-13,20
SB72	sp3R/39	wind+ice	28,61
SB72	sp3F-p/40	wind+ice	-24,77
SB73	sp3F-p/40	wind+ice	17,59
SB73	sp3R/39	wind+ice	-18,89
SB74	1a-p/70	wind;10	7,18
SB74	1a/71	wind;10	-10,94
SB75	1a-p/70	wind;10	6,95
SB75	1a/71	wind;10	-11,11
SB76	sp3R-p/42	wind+ice	17,64
SB76	sp3F/41	wind+ice	-18,87
SB77	sp3R-p/42	wind+ice	17,60
SB77	sp3F/41	wind+ice	-19,15
SB78	1a-p/44	wind;10	9,78
SB78	1a/43	wind;10	-8,38
SB79	1a-p/44	wind;10	9,62
SB79	1a/43	wind;10	-8,40
SB80	sp3F-p/40	wind+ice	17,71
SB80	sp3R/39	wind+ice	-19,00
SB81	sp3F-p/25	wind+ice	6,72
SB81	sp3R/24	wind+ice	-9,13
SB82	sp3R/24	wind+ice	11,60
SB82	sp3F-p/25	wind+ice	-10,05
SB83	sp3RF-p/38	wind+ice	3,94
SB83	sp3RR/37	wind+ice	-7,00
SB84	sp3RR/37	wind+ice	8,56
SB84	sp3RF-p/38	wind+ice	-6,04
SB85	sp3RR-p/47	wind+ice	4,27
SB85	sp3RF/65	wind+ice	-7,21
SB86	sp3RF/65	wind+ice	8,82

D&C ENGINEERING	Project	- 150 kV lijn Leiden - Zoetermeer
	Onderdeel	- berekening Mast 55
	Omschrijving	- ontwerpberekening
	Nationale norm	EC - EN
	Auteur	- SMA

Staaf	BG	Geval beschrijving	N [kN]
SB86	sp3RR-p/47	wind+ice	-6,54
SB87	sp3R-p/27	wind+ice	7,13
SB87	sp3F/26	wind+ice	-9,58
SB88	sp3F/26	wind+ice	12,22
SB88	sp3R-p/27	wind+ice	-10,55
SB89	sp3R-p/6	wind+ice	6,91
SB89	sp3F/4	wind+ice	-8,79
SB90	sp3F/4	wind+ice	11,13
SB90	sp3R-p/6	wind+ice	-10,29
SB91	sp3LR-p/21	wind+ice	5,10
SB91	sp3LF/12	wind+ice	-6,46
SB92	sp3LF/12	wind+ice	7,79
SB92	sp3LR-p/21	wind+ice	-7,62
SB93	sp3LF-p/18	wind+ice	5,45
SB93	sp3LR/1	wind+ice	-6,81
SB94	sp3LR/1	wind+ice	8,25
SB94	sp3LF-p/18	wind+ice	-8,16
SB95	sp3F-p/2	wind+ice	7,30
SB95	sp3R/64	wind+ice	-9,18
SB96	sp3R/64	wind+ice	11,69
SB96	sp3F-p/2	wind+ice	-10,77
SB97	sp3RR/88	wind+ice	8,75
SB97	sp3RF-p/89	wind+ice	-7,59
SB98	sp3LR/76	wind+ice	4,46
SB98	sp3LF-p/77	wind+ice	-3,24
SB99	sp3LF/74	wind+ice	6,63
SB99	sp3LR-p/75	wind+ice	-4,22
SB100	sp3RF/123	wind+ice	6,11
SB100	sp3RR-p/141	wind+ice	-5,52
SB101	sp3LF/31	wind+ice	9,42
SB101	sp3LR-p/142	wind+ice	-8,36
SB102	sp3RF/35	wind+ice	3,95
SB102	sp3RR-p/36	wind+ice	-3,76
SB103	sp3RR/78	wind+ice	5,52
SB103	sp3RF-p/79	wind+ice	-5,15
SB104	sp3LR/32	wind+ice	6,52
SB104	sp3LF-p/33	wind+ice	-6,04
SB105	sp3RF/138	wind+ice	6,47
SB105	sp3RR-p/136	wind+ice	-6,33
SB106	sp3LF/144	wind+ice	3,36
SB106	sp3LR-p/143	wind+ice	-3,26
SB107	sp3LR/146	wind+ice	3,99
SB107	sp3LF-p/145	wind+ice	-4,77
SB108	sp3RR/91	wind+ice	5,28
SB108	sp3RF-p/147	wind+ice	-4,60
SB109	sp3LR/140	wind+ice	7,11
SB109	sp3LF-p/148	wind+ice	-6,77
SB110	sp3RR/150	wind+ice	3,85
SB110	sp3RF-p/149	wind+ice	-2,75
SB111	sp3RF/152	wind+ice	4,71
SB111	sp3RR-p/151	wind+ice	-3,86
SB112	sp3LF/153	wind+ice	5,77
SB112	sp3LR-p/103	wind+ice	-4,91
SB113	sp3F-p/25	wind+ice	10,47
SB113	sp3R/24	wind+ice	-14,21
SB114	sp3R/24	wind+ice	18,91
SB114	sp3F-p/25	wind+ice	-15,39
SB115	sp3RR/37	wind+ice	-9,01
SB115	sp3RF-p/38	wind+ice	3,50
SB116	1a-p/70	wind;10	-4,73
SB116	1a/71	wind;10	11,24
SB117	sp3R-p/55	wind+ice	5,00
SB117	sp3F/61	wind+ice	-10,04
SB118	sp3F/61	wind+ice	12,26
SB118	sp3R-p/55	wind+ice	-6,71
SB119	sp3F/26	wind+ice	-13,96
SB119	sp3R-p/27	wind+ice	10,19

Staaf	BG	Geval beschrijving	N [kN]
SB120	sp3F/26	wind+ice	17,70
SB120	sp3R-p/27	wind+ice	-14,05
SB121	sp3R-p/6	wind+ice	10,66
SB121	sp3F/4	wind+ice	-14,06
SB122	sp3R-p/6	wind+ice	-15,57
SB122	sp3F/4	wind+ice	18,81
SB123	sp3LR-p/21	wind+ice	5,24
SB123	sp3LF/12	wind+ice	-7,75
SB124	sp3LF/12	wind+ice	9,05
SB124	1a-p/44	wind;10	-7,51
SB125	sp3LF-p/18	wind+ice	6,22
SB125	sp3R/17	wind+ice	-9,10
SB126	sp3R/17	wind+ice	10,91
SB126	sp3LF-p/18	wind+ice	-8,57
SB127	sp3F-p/2	wind+ice	10,48
SB127	sp3R/64	wind+ice	-13,57
SB128	sp3F-p/2	wind+ice	-14,39
SB128	sp3R/64	wind+ice	17,24
SB129	sp3LF-p/33	wind+ice	-16,45
SB129	sp3LR/32	wind+ice	19,45
SB130	sp3LF-p/33	wind+ice	14,40
SB130	sp3LR/32	wind+ice	-15,81
SB131	sp3RR/88	wind+ice	16,66
SB131	sp3RF-p/89	wind+ice	-13,71
SB132	sp3RF-p/89	wind+ice	12,06
SB132	sp3RR/88	wind+ice	-13,58
SB133	sp3RF/65	wind+ice	11,43
SB133	sp3RR-p/47	wind+ice	-6,10
SB134	sp3RR-p/47	wind+ice	5,48
SB134	sp3RF/65	wind+ice	-8,81
SB135	sp3RR/37	wind+ice	10,18
SB135	sp1aRF-p/156	wind;10	-5,08
SB136	sp1aRF-p/156	wind;10	4,62
SB136	sp3RR/37	wind+ice	-7,83
SB137	sp3F/41	wind+ice	18,40
SB137	sp3R-p/42	wind+ice	-15,25
SB138	sp3R-p/42	wind+ice	13,30
SB138	sp3F/41	wind+ice	-14,87
SB139	sp3LF/31	wind+ice	18,27
SB139	sp3LR-p/142	wind+ice	-14,86
SB140	sp3LR-p/142	wind+ice	13,06
SB140	sp3LF/31	wind+ice	-14,90
SB141	sp3LR/1	wind+ice	9,89
SB141	sp3LF-p/18	wind+ice	-8,40
SB142	sp3LF-p/18	wind+ice	7,38
SB142	sp3LR/1	wind+ice	-7,53
SB143	sp3LF/12	wind+ice	8,60
SB143	sp3LR-p/21	wind+ice	-7,05
SB144	sp3LR-p/21	wind+ice	6,23
SB144	sp3LF/12	wind+ice	-6,51
SB241	sp3LR/1	wind+ice	0,00
SB241	sp3R-p/170	wind+ice	0,00
SB249	sp3F/171	wind+ice	0,00
SB249	sp3RR/88	wind+ice	0,00
SB250	sp3F/171	wind+ice	0,00
SB250	sp3RR/88	wind+ice	0,00
SB252	sp3LR/1	wind+ice	0,00
SB252	sp3R-p/170	wind+ice	0,00
SB259	sp3RR/127	wind+ice	0,00
SB259	1a/15	wind;10	-0,13
SB260	1a/15	wind;10	-0,17
SB260	sp3RR/91	wind+ice	0,00
SB261	sp3LR/1	wind+ice	0,00
SB261	1a/15	wind;10	-0,17
SB272	sp3LR/1	wind+ice	0,00
SB272	1a/15	wind;10	-0,13
SB273	sp3F/171	wind+ice	0,00

Staaf	BG	Geval beschrijving	N [kN]
SB273	sp3RR/88	wind+ice	0,00
SB274	sp3LR/1	wind+ice	0,00
SB274	sp3R-p/170	wind+ice	0,00
SB275	1a/15	wind;10	-0,13
SB275	sp3LR/1	wind+ice	0,00
SB276	sp3RR/78	wind+ice	0,00
SB276	1a/15	wind;10	-0,13
SB277	sp3F/9	wind+ice	0,00
SB277	sp3RR/88	wind+ice	0,00
SB278	sp3LR/1	wind+ice	0,00
SB278	sp3R-p/7	wind+ice	0,00
SB279	sp3LR/1	wind+ice	0,00
SB279	1a/15	wind;10	-0,13
SB280	sp3RR/91	wind+ice	0,00
SB280	1a/15	wind;10	-0,13
SB281	sp3RR/88	wind+ice	0,00
SB281	sp3F/9	wind+ice	0,00
SB282	sp3LF-p/145	wind+ice	0,00
SB282	sp3LR/146	wind+ice	0,00
SB283	1a/15	wind;10	-0,17
SB283	sp3LR/1	wind+ice	0,00
SB284	sp3RR/91	wind+ice	0,00
SB284	1a/15	wind;10	-0,17
SB285	sp3F/177	wind+ice	0,00
SB285	sp3LR/32	wind+ice	0,00
SB286	sp3F/177	wind+ice	0,00
SB286	sp3LR-p/155	wind+ice	0,00
SB287	sp3LR-p/155	wind+ice	0,00
SB287	sp3LF/132	wind+ice	0,00
SB288	1a/56	wind;10	-0,17
SB288	sp3RR/37	wind+ice	0,00
SB289	sp3F/177	wind+ice	0,00
SB289	sp3LR/32	wind+ice	0,00
SB290	sp3LF/132	wind+ice	0,00
SB290	sp3LR-p/155	wind+ice	0,00
SB291	sp3LR/32	wind+ice	0,00
SB291	1a/56	wind;10	-0,13
SB292	sp3RR/37	wind+ice	0,00
SB292	1a/56	wind;10	-0,17
SB293	1a/56	wind;10	-0,13
SB293	sp3RR/37	wind+ice	0,00
SB294	sp3LR/32	wind+ice	0,00
SB294	sp1aF/181	wind;10	0,00
SB295	sp3R-p/182	wind+ice	0,00
SB295	sp3LF/132	wind+ice	0,00
SB296	1a/56	wind;10	-0,13
SB296	sp3RR/37	wind+ice	0,00
SB297	1a/56	wind;10	-0,13
SB297	sp3LR/140	wind+ice	0,00
SB298	sp3F/177	wind+ice	0,00
SB298	sp3LR-p/155	wind+ice	0,00
SB299	sp3LR/32	wind+ice	0,00
SB299	sp3F/177	wind+ice	0,00
SB300	sp3RR/37	wind+ice	0,00
SB300	1a/56	wind;10	-0,13
SB301	1a/56	wind;10	-0,13
SB301	sp3LR/121	wind+ice	0,00
SB302	sp3LR/32	wind+ice	0,00
SB302	sp3F/80	wind+ice	0,00
SB303	1a/56	wind;10	-0,17
SB303	sp3LR/140	wind+ice	0,00
SB304	sp3LR/140	wind+ice	0,00
SB304	1a/56	wind;10	-0,17
SB305	sp3RF/123	wind+ice	0,00
SB305	sp3R/108	wind+ice	0,00
SB306	sp3F-p/185	wind+ice	0,00
SB306	sp3RR/186	wind+ice	0,00

D&C ENGINEERING	Project	- 150 kV lijn Leiden - Zoetermeer
	Onderdeel	- berekening Mast 55
	Omschrijving	- ontwerpberekening
	Nationale norm	EC - EN
	Auteur	- SMA

Staaf	BG	Geval beschrijving	N [kN]
SB307	sp3RF-p/187	wind+ice	**0,00**
SB307	sp3RR/186	wind+ice	**0,00**
SB308	1a/19	wind;10	**-0,17**
SB308	sp3LF/12	wind+ice	**0,00**
SB309	sp3RF/123	wind+ice	**0,00**
SB309	sp3R/108	wind+ice	**0,00**
SB310	sp3RR/186	wind+ice	**0,00**
SB310	sp3F-p/185	wind+ice	**0,00**
SB311	1a/19	wind;10	**-0,13**
SB311	sp3RF/99	wind+ice	**0,00**
SB312	1a/19	wind;10	**-0,17**
SB312	sp3LF/12	wind+ice	**0,00**
SB313	1a/19	wind;10	**-0,13**
SB313	sp3LF/12	wind+ice	**0,00**
SB314	sp3RF/123	wind+ice	**0,00**
SB314	sp1aR/189	wind;10	**0,00**
SB315	sp3F-p/109	wind+ice	**0,00**
SB315	sp3RR/186	wind+ice	**0,00**
SB316	sp3LF/12	wind+ice	**0,00**
SB316	1a/19	wind;10	**-0,13**
SB317	sp3RF/123	wind+ice	**0,00**
SB317	1a/19	wind;10	**-0,13**
SB318	sp3RR/186	wind+ice	**0,00**
SB318	sp3F-p/185	wind+ice	**0,00**
SB319	sp3R/108	wind+ice	**0,00**
SB319	sp3RF/123	wind+ice	**0,00**
SB320	sp3LF/12	wind+ice	**0,00**

Staaf	BG	Geval beschrijving	N [kN]
SB320	1a/19	wind;10	**-0,13**
SB321	sp3RF/35	wind+ice	**0,00**
SB321	1a/19	wind;10	**-0,13**
SB322	sp3R/108	wind+ice	**0,00**
SB322	sp3RF/123	wind+ice	**0,00**
SB323	sp3RF/123	wind+ice	**0,00**
SB323	1a/19	wind;10	**-0,17**
SB324	sp3RF/123	wind+ice	**0,00**
SB324	1a/19	wind;10	**-0,17**
SB325	sp3R/50	wind+ice	**0,00**
SB325	sp3LF/31	wind+ice	**0,00**
SB326	sp3RF/65	wind+ice	**0,00**
SB326	sp3F-p/29	wind+ice	**0,00**
SB327	sp3RF/65	wind+ice	**0,00**
SB327	sp3F-p/29	wind+ice	**0,00**
SB328	sp3R/50	wind+ice	**0,00**
SB328	sp3LF/31	wind+ice	**0,00**
SB329	sp3RF/65	wind+ice	**0,00**
SB329	sp3F-p/29	wind+ice	**0,00**
SB330	sp3LF/86	wind+ice	**0,00**
SB330	1a/59	wind;10	**-0,13**
SB331	sp3RF/65	wind+ice	**0,00**
SB331	1a/59	wind;10	**-0,17**
SB332	sp3RF/65	wind+ice	**0,00**
SB332	1a/59	wind;10	**-0,13**
SB333	sp3R/50	wind+ice	**0,00**
SB333	sp3LF/31	wind+ice	**0,00**

Staaf	BG	Geval beschrijving	N [kN]
SB334	sp3RF/65	wind+ice	**0,00**
SB334	sp3F-p/53	wind+ice	**0,00**
SB335	sp3RF/65	wind+ice	**0,00**
SB335	1a/59	wind;10	**-0,13**
SB336	sp3LF/31	wind+ice	**0,00**
SB336	1a/59	wind;10	**-0,13**
SB337	sp3RF/65	wind+ice	**0,00**
SB337	sp3F-p/29	wind+ice	**0,00**
SB338	sp3R/50	wind+ice	**0,00**
SB338	sp3LF/31	wind+ice	**0,00**
SB339	sp3RF/65	wind+ice	**0,00**
SB339	1a/59	wind;10	**-0,13**
SB340	sp3LF/86	wind+ice	**0,00**
SB340	1a/59	wind;10	**-0,13**
SB341	sp3R/50	wind+ice	**0,00**
SB341	sp3LF/31	wind+ice	**0,00**
SB342	sp3LF/31	wind+ice	**0,00**
SB342	1a/59	wind;10	**-0,17**
SB343	sp3RF/65	wind+ice	**0,00**
SB343	1a/59	wind;10	**-0,17**
SB344	sp3LF/31	wind+ice	**0,00**
SB344	1a/59	wind;10	**-0,17**

11.2. Reacties

Lineaire berekening, Extreem : Globaal
Selectie : Alle
Klasse : All UGT

Steunpunt	BG	Rx [kN]	Ry [kN]	Rz [kN]	Mx [kNm]	My [kNm]	Mz [kNm]
Sn3/N306	sp3F/26	**-302,70**	-235,69	**1430,16**	0,00	0,00	0,00
Sn1/N248	sp3R/64	**290,70**	222,11	1357,34	0,00	0,00	0,00
Sn3/N306	sp1aF/180	-298,87	**-240,62**	1406,93	0,00	0,00	0,00
Sn1/N248	sp1aR/200	289,03	**230,80**	1352,01	0,00	0,00	0,00
Sn1/N248	sp3F-p/2	-226,89	-166,25	**-1083,93**	0,00	0,00	0,00
Sn1/N248	1a/201	34,57	24,49	131,50	**0,00**	**0,00**	**0,00**

11.3. Resultante op Fundering

Lineaire berekening, Extreem : Globaal
Selectie : Alle
Klasse : All UGT

BG	Steunpunt	Extreem	horiz. component [kN]	resultante [kN]	Hoek [deg]	helling(afschot) [-]	Rx [kN]	Ry [kN]	Rz [kN]
sp3F/206	Sn3/N306	Rz	**10,54**	1430,20	30,15	135,64	2,70	10,19	1430,16
sp3F/26	Sn3/N306	Rx	**384,41**	386,53	173,05	-0,11	-302,70	-236,95	-40,45
sp1aF/203	Sn2/N298	Ry	214,95	**283,06**	125,93	-0,86	-33,87	-212,27	-184,17
sp3F/206	Sn3/N306	Rz	10,54	**1430,20**	30,15	135,64	2,70	10,19	1430,16
sp1aR-p/205	Sn3/N306	Rz	148,16	1036,96	**-179,63**	-6,93	-104,09	-105,43	-1026,33
sp1aF/180	Sn3/N306	Ry	383,69	425,81	**173,84**	-0,48	-298,87	-240,62	-184,65
sp1aR-p/205	Sn3/N306	Rz	148,16	1036,96	-179,63	**-6,93**	-104,09	-105,43	-1026,33
sp3F/206	Sn3/N306	Rz	10,54	1430,20	30,15	**135,64**	2,70	10,19	1430,16
sp3F/26	Sn3/N306	Rx	384,41	386,53	173,05	-0,11	**-302,70**	-236,95	-40,45
sp3R/64	Sn1/N248	Rx	366,69	1409,20	172,55	3,71	**290,70**	223,50	1360,66
sp1aF/180	Sn3/N306	Ry	383,69	425,81	173,84	-0,48	-298,87	**-240,62**	-184,65
sp1aR/200	Sn1/N248	Ry	369,88	1401,69	173,61	3,66	289,03	**230,80**	1352,01
sp3F-p/2	Sn1/N248	Rx	281,65	1119,92	-8,67	-3,85	-226,89	-166,87	**-1083,93**
sp3F/206	Sn3/N306	Rz	10,54	1430,20	30,15	135,64	2,70	10,19	**1430,16**

11.4. Controle UNP en HEB profilen

11.4.1. Staalcontrole; Algehele toetsing Vak 9+13+14+ CrossArm1+2

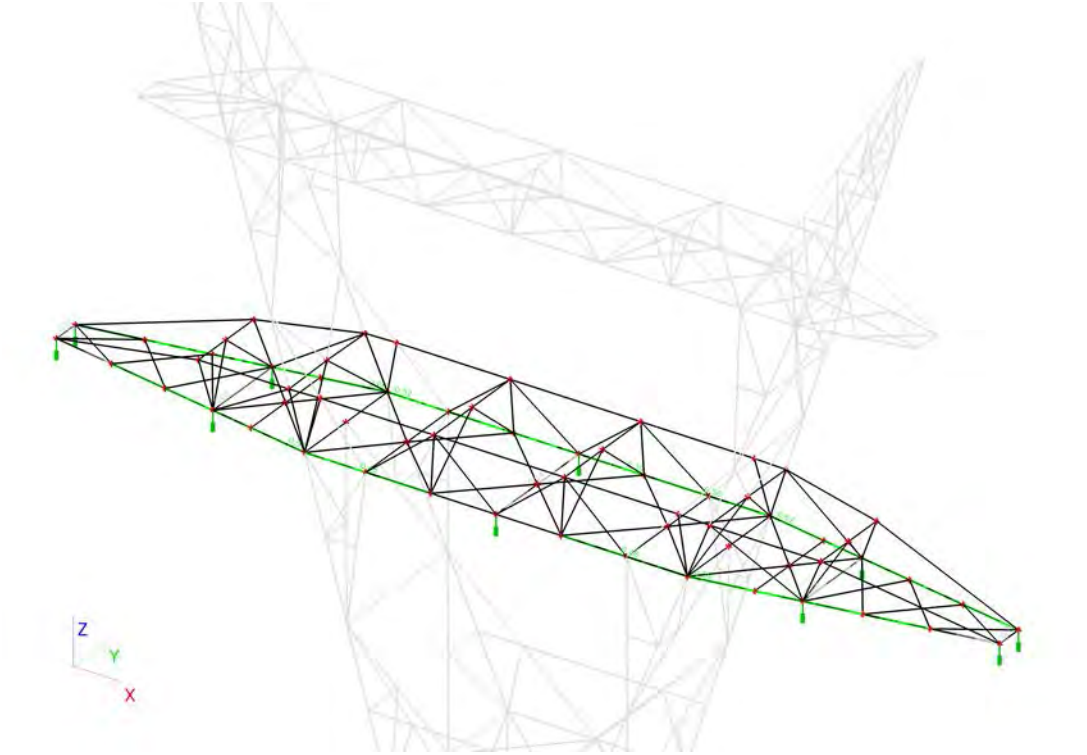

11.4.2. Staalcontrole; Algehele toetsing Vak 15 t/m 21 + CrossArm3+4

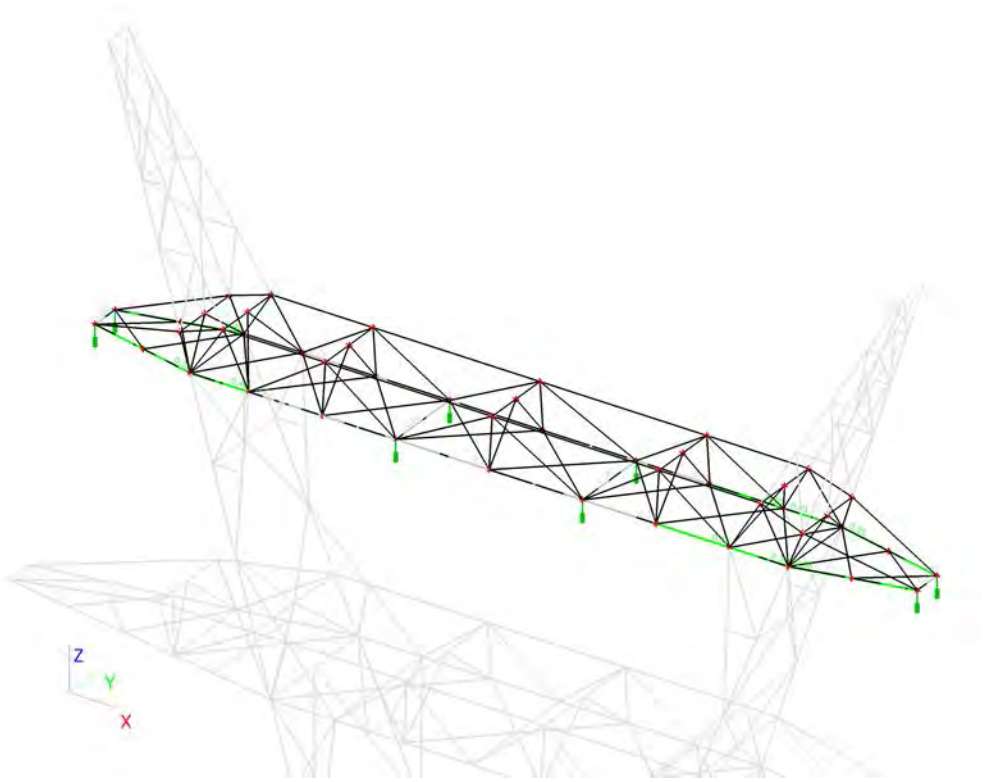

Bijlage C Controle staven mastlichaam

Order :	14509	**Dossier :**	13.039	**Berekening :**
Project :	Omleiding mast 52 tot 54 en noodmast 74, 150 kv-Lijn Leiden-Zoetermeer			
Part :	Mast 55			

D&C ENGINEERING

Check equal leg angle-members according to Eurocode 3, prEN 1993-1-1 : 2003

File prEN 1993-1-1.revB.xls d.d. 2-32012, JG

Check section: *Vak 1 Randen L200x200x26* *M01*

Memberforces : **(Attention! pressure = "-" and tension ="+")**

Compression:	N_{Sd}	=	*-1657,72*	kN	***Combined forces diagonal:***			
Tension:	N_{Sd}	=	*1344,49*	kN	$N_{comb1;c;s;d}$ (min. Compr. or tension)	=	*0*	kN
	$F_{perpend.;s;d}$	=	*0*	kN	$N_{comb2;c;s;d}$ (max. compression)	=	*0*	kN

Angle profile : *H200/200/26* (*1)

h	=	*200*	mm	I_y	=	*35603980*	mm^4
b	=	*200*	mm	$W_{y;el;eff.1}$	=	*252744*	mm^3
t_f	=	*26*	mm	$W_{y;el;eff.2}$	=	*602125*	mm^3
y_s	=	*59,1*	mm	i_y	=	*60,4*	mm
A_{bruto}	=	*9759*	mm^2	i_v	=	*38,8*	mm

Material :

Mat. qual. Fe360 / Fe510	=	*Fe360*		Permissible stress $f_{y;d}$	=	*235,0*	N/mm^2

Geometry section and bolts:

$L_{y;cr}$	=	*1825*	mm	No. bolts / end / flange		=	*5*	**(Per flange !)**
$L_{v;cr}$	=	*1825*	mm	Type of bolts	M / "	=	*30*	
$L_{tot\ (with\ comb.\ buckling)}$	=	*0*	mm	End distance bolt	e1	=	*60*	mm
$a*L_{tot\ (with\ comb.\ buckling)}$	=	*0*	mm	Centre-centre spacing bolt	s1	=	*90*	mm
$L_{perpendicular\ force}$	=	*0*	mm	Edge distance bolt	e2	=	*45*	mm
Position perpendicular force	=	*1*	(⌉=1, ⌋=2)	Boltquality	4.6/5.6/8.8/10.9	=	*4,6*	
Column profile?	=	*2*	no=1, yes=2	Rolled screw threads		=	*1*	
Thickness tie plate	=	*16*	mm	Dubble strap joint no=1, yes=2		=	*2*	

Summary checks :

1 - Check tension on member :

$UC_1 = N_{Ed} / N_{t.Rd}$ = **0,64** **< 1**

2 - Check perpendicular force on member :

$UC_2 = M_{Ed} / M_{c.Rd}$ = **n.v.t.** **< 1**

3 - Check of the member slenderness :

$UC_3 = C_{max;buc} / C_{perm}$ = **47** **< 120**

4 - Check stress in member due to compression without excentricity:

$UC_4 = N_{E;d} / (C_{max;buc} \times N_{b;Rd})$ = **0,82** **< 1**

5 - Check stress in member due to compression with excentricity:

$UC_{5-1} = N_{E;d} / (C_{max;buc} \times N_{b;Rd})$ = **n.v.t.** **< 1**

$UC_{5-2} = N_{E;d} / N_{b;Rd} + k_{yy} \times (M_{y;Ed} + DM_{y;Ed}) / (C_{LT} \times M_{y;Rk})$ = **n.v.t.** **< 1**

6 - Check stress with combined buckling of two sections:

$UC_{5-1} = N_{E;d} / (C_{max;buc} \times N_{b;Rd})$ = **n.v.t.** **< 1**

$UC_{5-2} = N_{E;d} / N_{b;Rd} + k_{yy} \times (M_{y;Ed} + DM_{y;Ed}) / (C_{LT} \times M_{y;Rk})$ = **n.v.t.** **< 1**

7 - Check shear stress boltconnection:

$UC_7 = F_{v;Ed} / F_{v;Rd}$ = **0,77** **< 1**

8 - Check bearing stress boltconnection:

$UC_8 = F_{b;Ed} / F_{b;Rd}$ = **0,53** **< 1**

Remarks:

The maximum increase of stress or totalstress is(*2) : **$U.C_{max}$ = 0,82 = 82%**

(*1) Eventually, with the checks of the stresses, the cross-section reduction method is used according to prEN 1993-1-5

(*2) The total stress or increase of stress has been related to the permissible stress

Revision :	0	A	B	C	D	E	F
Date :	13-mrt-2012						
Name :	J Goddijn						
Checked :	J Boogert						

Order :	14509	**Dossier :**	13.039	**Berekening :**
Project :	Omleiding mast 52 tot 54 en noodmast 74, 150 kv-Lijn Leiden-Zoetermeer			
Part :	Mast 55			

D&C ENGINEERING

Check equal leg angle-members according to Eurocode 3, prEN 1993-1-1 : 2003

File prEN 1993-1-1.revB.xls d.d. 2-32012, JG

Check section: *Vak 1 Diagonalen L130x13x12* *M02*

Memberforces : **(Attention! pressure = "-" and tension ="+")**

Compression:	N_{Sd}	=	*-271,75*	kN	***Combined forces diagonal:***			
Tension:	N_{Sd}	=	*256,83*	kN	$N_{comb1;c;s;d}$ (min. Compr. or tension)	=	*0*	kN
	$F_{perpend.;s;d}$	=	*0*	kN	$N_{comb2;c;s;d}$ (max. compression)	=	*0*	kN

Angle profile : *H130/130/12* (*1)

h	=	*130*	mm	I_y	=	*4721746*	mm^4
b	=	*130*	mm	$W_{y;el;eff.1}$	=	*50442*	mm^3
t_f	=	*12*	mm	$W_{y;el;eff.2}$	=	*129742*	mm^3
y_s	=	*36,4*	mm	i_y	=	*39,7*	mm
A_{bruto}	=	*2997*	mm^2	i_v	=	*25,2*	mm

Material :

Mat. qual. Fe360 / Fe510	=	*Fe360*		Permissible stress $f_{y;d}$	=	*235,0*	N/mm^2

Geometry section and bolts:

$L_{y;cr}$	=	*2048*	mm	No. bolts / end / flange	=	*4*	
$L_{v;cr}$	=	*2048*	mm	Type of bolts M / "	=	*24*	
L_{tot} (with comb. buckling)	=	*0*	mm	End distance bolt e1	=	*50*	mm
$a*L_{tot}$ (with comb. buckling)	=	*0*	mm	Centre-centre spacing bolt s1	=	*90*	mm
$L_{perpendicular\ force}$	=	*0*	mm	Edge distance bolt e2	=	*40*	mm
Position perpendicular force	=	*1*	(⌉=1, ⌋=2)	Boltquality 4.6/5.6/8.8/10.9	=	*4,6*	
Column profile?	=	*1*	no=1, yes=2	Rolled screw threads	=	*1*	
Thickness tie plate	=	*12*	mm	Dubble strap joint no=1, yes=2	=	*1*	

Summary checks :

1 - Check tension on member :

$UC_1 = N_{Ed} / N_{t.Rd}$ = **0,58** **< 1**

2 - Check perpendicular force on member :

$UC_2 = M_{Ed} / M_{c.Rd}$ = **n.v.t.** **< 1**

3 - Check of the member slenderness :

$UC_3 = C_{max;buc} / C_{perm}$ = **81** **< 200 or 240**

4 - Check stress in member due to compression without excentricity:

$UC_4 = N_{E;d} / (C_{max;buc} \times N_{b;Rd})$ = **0,56** **< 1**

5 - Check stress in member due to compression with excentricity:

$UC_{5-1} = N_{E;d} / (C_{max;buc} \times N_{b;Rd})$ = **n.v.t.** **< 1**

$UC_{5-2} = N_{E;d} / N_{b;Rd} + k_{yy} \times (M_{y;Ed} + DM_{y;Ed}) / (C_{LT} \times M_{y;Rk})$ = **n.v.t.** **< 1**

6 - Check stress with combined buckling of two sections:

$UC_{5-1} = N_{E;d} / (C_{max;buc} \times N_{b;Rd})$ = **n.v.t.** **< 1**

$UC_{5-2} = N_{E;d} / N_{b;Rd} + k_{yy} \times (M_{y;Ed} + DM_{y;Ed}) / (C_{LT} \times M_{y;Rk})$ = **n.v.t.** **< 1**

7 - Check shear stress boltconnection:

$UC_7 = F_{v;Ed} / F_{v;Rd}$ = **1,00** **> 1 !!**

8 - Check bearing stress boltconnection:

$UC_8 = F_{b;Ed} / F_{b;Rd}$ = **0,48** **< 1**

Remarks:

The maximum increase of stress or totalstress is(*2) : **$U.C_{max}$ = 1,00 = 100%**

(*1) Eventually, with the checks of the stresses, the cross-section reduction method is used according to prEN 1993-1-5

(*2) The total stress or increase of stress has been related to the permissible stress

Revision :	0	A	B	C	D	E	F
Date :	13-mrt-2012						
Name :	J Goddijn						
Checked :	J Boogert						

Order :	14509	**Dossier :**	13.039	**Berekening :**
Project :	Omleiding mast 52 tot 54 en noodmast 74, 150 kv-Lijn Leiden-Zoetermeer			
Part :	Mast 55			

D&C ENGINEERING

Check equal leg angle-members according to Eurocode 3, prEN 1993-1-1 : 2003

File prEN 1993-1-1.revB.xls d.d. 2-32012, JG

Check section: *Vak 1 Horizontale En verticale Knikverkorters L50x50x5* *M03*

Memberforces : **(Attention! pressure = "-" and tension ="+")**

Compression:	N_{Sd}	=	*-2,13*	kN	***Combined forces diagonal:***			
Tension:	N_{Sd}	=	*2,13*	kN	$N_{comb1;c;s;d}$ (min. Compr. or tension)	=	*0*	kN
	$F_{perpend.;s;d}$	=	*1,5*	kN	$N_{comb2;c;s;d}$ (max. compression)	=	*0*	kN

Angle profile : *H50/50/5* (*1)

h	=	*50*	mm	I_y	=	*109643*	mm^4
b	=	*50*	mm	$W_{y;el;eff.1}$	=	*3049*	mm^3
t_f	=	*5*	mm	$W_{y;el;eff.2}$	=	*7811*	mm^3
y_s	=	*14,0*	mm	i_y	=	*15,1*	mm
A_{bruto}	=	*480*	mm^2	i_v	=	*9,6*	mm

Material :

Mat. qual. Fe360 / Fe510	=	*Fe360*		Permissible stress $f_{y;d}$	=	*235,0*	N/mm^2

Geometry section and bolts:

$L_{y;cr}$	=	*2409*	mm	No. bolts / end / flange	=	*1*	
$L_{v;cr}$	=	*2409*	mm	Type of bolts M / "	=	*16*	
$L_{tot\ (with\ comb.\ buckling)}$	=	*0*	mm	End distance bolt e1	=	*30*	mm
$a*L_{tot\ (with\ comb.\ buckling)}$	=	*0*	mm	Centre-centre spacing bolt s1	=	*50*	mm
$L_{perpendicular\ force}$	=	*1791*	mm	Edge distance bolt e2	=	*25*	mm
Position perpendicular force	=	*1*	(⌉=1, ⌋=2)	Boltquality 4.6/5.6/8.8/10.9	=	*4,6*	
Column profile?	=	*1*	no=1, yes=2	Rolled screw threads	=	*1*	
Thickness tie plate	=	*5*	mm	Dubble strap joint no=1, yes=2	=	*1*	

Summary checks :

1 - Check tension on member :

$UC_1 = N_{Ed} / N_{t.Rd}$ = **0,05** **< 1**

2 - Check perpendicular force on member :

$UC_2 = M_{Ed} / M_{c.Rd}$ = **0,94** **< 1**

3 - Check of the member slenderness :

$UC_3 = C_{max;buc} / C_{perm}$ = **251** **< 200 or 240**

4 - Check stress in member due to compression without excentricity:

$UC_4 = N_{E;d} / (C_{max;buc} \times N_{b;Rd})$ = **n.v.t.** **< 1**

5 - Check stress in member due to compression with excentricity:

$UC_{5-1} = N_{E;d} / (C_{max;buc} \times N_{b;Rd})$ = **0,15** **< 1**

$UC_{5-2} = N_{E;d} / N_{b;Rd} + k_{yy} \times (M_{y;Ed} + DM_{y;Ed}) / (C_{LT} \times M_{y;Rk})$ = **0,19** **< 1**

6 - Check stress with combined buckling of two sections:

$UC_{5-1} = N_{E;d} / (C_{max;buc} \times N_{b;Rd})$ = **n.v.t.** **< 1**

$UC_{5-2} = N_{E;d} / N_{b;Rd} + k_{yy} \times (M_{y;Ed} + DM_{y;Ed}) / (C_{LT} \times M_{y;Rk})$ = **n.v.t.** **< 1**

7 - Check shear stress boltconnection:

$UC_7 = F_{v;Ed} / F_{v;Rd}$ = **0,07** **< 1**

8 - Check bearing stress boltconnection:

$UC_8 = F_{b;Ed} / F_{b;Rd}$ = **0,08** **< 1**

Remarks:

The maximum increase of stress or totalstress is(*2) : **$U.C_{max}$ = 0,94 = 94%**

(*1) Eventually, with the checks of the stresses, the cross-section reduction method is used according to prEN 1993-1-5

(*2) The total stress or increase of stress has been related to the permissible stress

Revision :	0	A	B	C	D	E	F
Date :	13-mrt-2012						
Name :	J Goddijn						
Checked :	J Boogert						

Order :	14509	**Dossier :**	13.039	**Berekening :**
Project :	Omleiding mast 52 tot 54 en noodmast 74, 150 kv-Lijn Leiden-Zoetermeer			
Part :	Mast 55			

D&C ENGINEERING

Check equal leg angle-members according to Eurocode 3, prEN 1993-1-1 : 2003

File prEN 1993-1-1.revB.xls d.d. 2-32012, JG

Check section: *Vak 1 Horizontale en Verticale Knikverkorters L60x60x6* *M04*

Memberforces : **(Attention! pressure = "-" and tension ="+")**

Compression:	N_{Sd}	=	*-13,95*	kN	***Combined forces diagonal:***			
Tension:	N_{Sd}	=	*13,95*	kN	$N_{comb1;c;s;d}$ (min. Compr. or tension)	=	*0*	kN
	$F_{perpend.;s;d}$	=	*1,5*	kN	$N_{comb2;c;s;d}$ (max. compression)	=	*0*	kN

Angle profile : *H60/60/6* (*1)

h	=	*60*	mm	I_y	=	*227925*	mm^4
b	=	*60*	mm	$W_{y;el;eff.1}$	=	*5285*	mm^3
t_f	=	*6*	mm	$W_{y;el;eff.2}$	=	*13507*	mm^3
y_s	=	*16,9*	mm	i_y	=	*18,2*	mm
A_{bruto}	=	*691*	mm^2	i_v	=	*11,5*	mm

Material :

Mat. qual. Fe360 / Fe510	=	*Fe360*		Permissible stress $f_{y;d}$	=	*235,0*	N/mm^2

Geometry section and bolts:

$L_{y;cr}$	=	*2533*	mm	No. bolts / end / flange	=	*1*	
$L_{v;cr}$	=	*2533*	mm	Type of bolts M / "	=	*16*	
$L_{tot\ (with\ comb.\ buckling)}$	=	*0*	mm	End distance bolt e1	=	*30*	mm
$a*L_{tot\ (with\ comb.\ buckling)}$	=	*0*	mm	Centre-centre spacing bolt s1	=	*50*	mm
$L_{perpendicular\ force}$	=	*2533*	mm	Edge distance bolt e2	=	*25*	mm
Position perpendicular force	=	*1*	(⌉=1, ⌋=2)	Boltquality 4.6/5.6/8.8/10.9	=	*4,6*	
Column profile?	=	*1*	no=1, yes=2	Rolled screw threads	=	*1*	
Thickness tie plate	=	*6*	mm	Dubble strap joint no=1, yes=2	=	*1*	

Summary checks :

1 - Check tension on member :

$UC_1 = N_{Ed} / N_{t.Rd}$ = **0,25** **< 1**

2 - Check perpendicular force on member :

$UC_2 = M_{Ed} / M_{c.Rd}$ = **0,76** **< 1**

3 - Check of the member slenderness :

$UC_3 = C_{max;buc} / C_{perm}$ = **219** **< 200 or 240**

4 - Check stress in member due to compression without excentricity:

$UC_4 = N_{E;d} / (C_{max;buc} \times N_{b;Rd})$ = **n.v.t.** **< 1**

5 - Check stress in member due to compression with excentricity:

$UC_{5-1} = N_{E;d} / (C_{max;buc} \times N_{b;Rd})$ = **0,54** **< 1**

$UC_{5-2} = N_{E;d} / N_{b;Rd} + k_{yy} \times (M_{y;Ed} + DM_{y;Ed}) / (C_{LT} \times M_{y;Rk})$ = **0,69** **< 1**

6 - Check stress with combined buckling of two sections:

$UC_{5-1} = N_{E;d} / (C_{max;buc} \times N_{b;Rd})$ = **n.v.t.** **< 1**

$UC_{5-2} = N_{E;d} / N_{b;Rd} + k_{yy} \times (M_{y;Ed} + DM_{y;Ed}) / (C_{LT} \times M_{y;Rk})$ = **n.v.t.** **< 1**

7 - Check shear stress boltconnection:

$UC_7 = F_{v;Ed} / F_{v;Rd}$ = **0,46** **< 1**

8 - Check bearing stress boltconnection:

$UC_8 = F_{b;Ed} / F_{b;Rd}$ = **0,41** **< 1**

Remarks:

The maximum increase of stress or totalstress is(*2) : **$U.C_{max}$ = 0,76 = 76%**

(*1) Eventually, with the checks of the stresses, the cross-section reduction method is used according to prEN 1993-1-5

(*2) The total stress or increase of stress has been related to the permissible stress

Revision :	0	A	B	C	D	E	F
Date :	13-mrt-2012						
Name :	J Goddijn						
Checked :	J Boogert						

Order :	14509	**Dossier :**	13.039	**Berekening :**
Project :	Omleiding mast 52 tot 54 en noodmast 74, 150 kv-Lijn Leiden-Zoetermeer			
Part :	Mast 55			

D&C ENGINEERING

Check equal leg angle-members according to Eurocode 3, prEN 1993-1-1 : 2003

File prEN 1993-1-1.revB.xls d.d. 2-32012, JG

Check section: *Vak 1 Horizontale en Verticale Knikverkorters L55x55x6* *M05*

Memberforces : **(Attention! pressure = "-" and tension ="+")**

Compression:	N_{Sd}	=	*-3,02*	kN	***Combined forces diagonal:***			
Tension:	N_{Sd}	=	*3,02*	kN	$N_{comb1;c;s;d}$ (min. Compr. or tension)	=	*0*	kN
	$F_{perpend.;s;d}$	=	*1,5*	kN	$N_{comb2;c;s;d}$ (max. compression)	=	*0*	kN

Angle profile : *H55/55/6* (*1)

h	=	*55*	mm	I_y	=	*172872*	mm^4
b	=	*55*	mm	$W_{y;el;eff.1}$	=	*4391*	mm^3
t_f	=	*6*	mm	$W_{y;el;eff.2}$	=	*11060*	mm^3
y_s	=	*15,6*	mm	i_y	=	*16,6*	mm
A_{bruto}	=	*631*	mm^2	i_v	=	*10,5*	mm

Material :

Mat. qual. Fe360 / Fe510	=	*Fe360*		Permissible stress $f_{y;d}$	=	*235,0*	N/mm^2

Geometry section and bolts:

$L_{y;cr}$	=	*4478*	mm	No. bolts / end / flange	=	*1*	
$L_{v;cr}$	=	*4478*	mm	Type of bolts M / "	=	*16*	
$L_{tot\ (with\ comb.\ buckling)}$	=	*0*	mm	End distance bolt e1	=	*30*	mm
$a*L_{tot\ (with\ comb.\ buckling)}$	=	*0*	mm	Centre-centre spacing bolt s1	=	*50*	mm
$L_{perpendicular\ force}$	=	*2240*	mm	Edge distance bolt e2	=	*25*	mm
Position perpendicular force	=	*1*	(⌉=1, ⌋=2)	Boltquality 4.6/5.6/8.8/10.9	=	*4,6*	
Column profile?	=	*1*	no=1, yes=2	Rolled screw threads	=	*1*	
Thickness tie plate	=	*6*	mm	Dubble strap joint no=1, yes=2	=	*1*	

Summary checks :

1 - Check tension on member :

$UC_1 = N_{Ed} / N_{t.Rd}$ = **0,05** **< 1**

2 - Check perpendicular force on member :

$UC_2 = M_{Ed} / M_{c.Rd}$ = **0,81** **< 1**

3 - Check of the member slenderness :

$UC_3 = C_{max;buc} / C_{perm}$ = **425** **< 200 or 240**

4 - Check stress in member due to compression without excentricity:

$UC_4 = N_{E;d} / (C_{max;buc} \times N_{b;Rd})$ = **n.v.t.** **< 1**

5 - Check stress in member due to compression with excentricity:

$UC_{5-1} = N_{E;d} / (C_{max;buc} \times N_{b;Rd})$ = **0,45** **< 1**

$UC_{5-2} = N_{E;d} / N_{b;Rd} + k_{yy} \times (M_{y;Ed} + DM_{y;Ed}) / (C_{LT} \times M_{y;Rk})$ = **0,49** **< 1**

6 - Check stress with combined buckling of two sections:

$UC_{5-1} = N_{E;d} / (C_{max;buc} \times N_{b;Rd})$ = **n.v.t.** **< 1**

$UC_{5-2} = N_{E;d} / N_{b;Rd} + k_{yy} \times (M_{y;Ed} + DM_{y;Ed}) / (C_{LT} \times M_{y;Rk})$ = **n.v.t.** **< 1**

7 - Check shear stress boltconnection:

$UC_7 = F_{v;Ed} / F_{v;Rd}$ = **0,10** **< 1**

8 - Check bearing stress boltconnection:

$UC_8 = F_{b;Ed} / F_{b;Rd}$ = **0,09** **< 1**

Remarks:

The maximum increase of stress or totalstress is(*2) : **$U.C_{max}$ = 0,81 = 81%**

(*1) Eventually, with the checks of the stresses, the cross-section reduction method is used according to prEN 1993-1-5

(*2) The total stress or increase of stress has been related to the permissible stress

Revision :	0	A	B	C	D	E	F
Date :	13-mrt-2012						
Name :	J Goddijn						
Checked :	J Boogert						

Order :	14509	**Dossier :**	13.039	**Berekening :**
Project :	Omleiding mast 52 tot 54 en noodmast 74, 150 kv-Lijn Leiden-Zoetermeer			
Part :	Mast 55			

D&C ENGINEERING

Check equal leg angle-members according to Eurocode 3, prEN 1993-1-1 : 2003

File prEN 1993-1-1.revB.xls d.d. 2-32012, JG

Check section: *Vak 1 Horizontale en Verticale Knikverkorters L65x65x7* *M06*

Memberforces : **(Attention! pressure = "-" and tension ="+")**

Compression:	N_{Sd}	=	*-23,73*	kN	***Combined forces diagonal:***			
Tension:	N_{Sd}	=	*23,73*	kN	$N_{comb1;c;s;d}$ (min. Compr. or tension)	=	*0*	kN
	$F_{perpend.;s;d}$	=	*1,5*	kN	$N_{comb2;c;s;d}$ (max. compression)	=	*0*	kN

Angle profile : *H65/65/7* (*1)

h	=	*65*	mm	I_y	=	*334319*	mm^4
b	=	*65*	mm	$W_{y;el;eff.1}$	=	*7185*	mm^3
t_f	=	*7*	mm	$W_{y;el;eff.2}$	=	*18103*	mm^3
y_s	=	*18,5*	mm	i_y	=	*19,6*	mm
A_{bruto}	=	*870*	mm^2	i_v	=	*12,5*	mm

Material :

Mat. qual. Fe360 / Fe510	=	*Fe360*		Permissible stress $f_{y;d}$	=	*235,0*	N/mm^2

Geometry section and bolts:

$L_{y;cr}$	=	*3322*	mm	No. bolts / end / flange	=	*1*	
$L_{v;cr}$	=	*3322*	mm	Type of bolts M / "	=	*16*	
$L_{tot\ (with\ comb.\ buckling)}$	=	*0*	mm	End distance bolt e1	=	*30*	mm
$a*L_{tot\ (with\ comb.\ buckling)}$	=	*0*	mm	Centre-centre spacing bolt s1	=	*50*	mm
$L_{perpendicular\ force}$	=	*3322*	mm	Edge distance bolt e2	=	*30*	mm
Position perpendicular force	=	*1*	(⌉=1, ⌋=2)	Boltquality 4.6/5.6/8.8/10.9	=	*4,6*	
Column profile?	=	*1*	no=1, yes=2	Rolled screw threads	=	*1*	
Thickness tie plate	=	*7*	mm	Dubble strap joint no=1, yes=2	=	*1*	

Summary checks :

1 - Check tension on member :

$UC_1 = N_{Ed} / N_{t.Rd}$ = **0,28** **< 1**

2 - Check perpendicular force on member :

$UC_2 = M_{Ed} / M_{c.Rd}$ = **0,74** **< 1**

3 - Check of the member slenderness :

$UC_3 = C_{max;buc} / C_{perm}$ = **266** **< 200 or 240**

4 - Check stress in member due to compression without excentricity:

$UC_4 = N_{E;d} / (C_{max;buc} \times N_{b;Rd})$ = **n.v.t.** **< 1**

5 - Check stress in member due to compression with excentricity:

$UC_{5-1} = N_{E;d} / (C_{max;buc} \times N_{b;Rd})$ = **1,05** **> 1 !!**

$UC_{5-2} = N_{E;d} / N_{b;Rd} + k_{yy} \times (M_{y;Ed} + DM_{y;Ed}) / (C_{LT} \times M_{y;Rk})$ = **1,24** **> 1 !!**

6 - Check stress with combined buckling of two sections:

$UC_{5-1} = N_{E;d} / (C_{max;buc} \times N_{b;Rd})$ = **n.v.t.** **< 1**

$UC_{5-2} = N_{E;d} / N_{b;Rd} + k_{yy} \times (M_{y;Ed} + DM_{y;Ed}) / (C_{LT} \times M_{y;Rk})$ = **n.v.t.** **< 1**

7 - Check shear stress boltconnection:

$UC_7 = F_{v;Ed} / F_{v;Rd}$ = **0,79** **< 1**

8 - Check bearing stress boltconnection:

$UC_8 = F_{b;Ed} / F_{b;Rd}$ = **0,53** **< 1**

Remarks:

The maximum increase of stress or totalstress is(*2) : **$U.C_{max}$ = 1,24 = 124%**

(*1) Eventually, with the checks of the stresses, the cross-section reduction method is used according to prEN 1993-1-5

(*2) The total stress or increase of stress has been related to the permissible stress

Revision :	0	A	B	C	D	E	F
Date :	13-mrt-2012						
Name :	J Goddijn						
Checked :	J Boogert						

Order :	14509	**Dossier :**	13.039	**Berekening :**
Project :	Omleiding mast 52 tot 54 en noodmast 74, 150 kv-Lijn Leiden-Zoetermeer			
Part :	Mast 55			

D&C ENGINEERING

Check equal leg angle-members according to Eurocode 3, prEN 1993-1-1 : 2003

File prEN 1993-1-1.revB.xls d.d. 2-32012, JG

Check section: *Vak 2 Randen L200x200x26* *M07*

Memberforces : **(Attention! pressure = "-" and tension ="+")**

Compression:	N_{Sd}	=	*-1568,46*	kN	***Combined forces diagonal:***			
Tension:	N_{Sd}	=	*1291,38*	kN	$N_{comb1;c;s;d}$ (min. Compr. or tension)	=	*0*	kN
	$F_{perpend.;s;d}$	=	*0*	kN	$N_{comb2;c;s;d}$ (max. compression)	=	*0*	kN

Angle profile : *H200/200/26* (*1)

h	=	*200*	mm	I_y	=	*35603980*	mm^4
b	=	*200*	mm	$W_{y;el;eff.1}$	=	*252744*	mm^3
t_f	=	*26*	mm	$W_{y;el;eff.2}$	=	*602125*	mm^3
y_s	=	*59,1*	mm	i_y	=	*60,4*	mm
A_{bruto}	=	*9759*	mm^2	i_v	=	*38,8*	mm

Material :

Mat. qual. Fe360 / Fe510	=	*Fe360*		Permissible stress $f_{y;d}$	=	*235,0*	N/mm^2

Geometry section and bolts:

$L_{y;cr}$	=	*1690*	mm	No. bolts / end / flange		=	*5*	**(Per flange !)**
$L_{v;cr}$	=	*1690*	mm	Type of bolts	M / "	=	*30*	
$L_{tot\ (with\ comb.\ buckling)}$	=	*0*	mm	End distance bolt	e1	=	*60*	mm
$a*L_{tot\ (with\ comb.\ buckling)}$	=	*0*	mm	Centre-centre spacing bolt	s1	=	*90*	mm
$L_{perpendicular\ force}$	=	*0*	mm	Edge distance bolt	e2	=	*45*	mm
Position perpendicular force	=	*1*	(⌉=1, ⌋=2)	Boltquality	4.6/5.6/8.8/10.9	=	*4,6*	
Column profile?	=	*2*	no=1, yes=2	Rolled screw threads		=	*1*	
Thickness tie plate	=	*12*	mm	Dubble strap joint no=1, yes=2		=	*2*	

Summary checks :

1 - Check tension on member :

$UC_1 = N_{Ed} / N_{t.Rd}$ = **0,62** **< 1**

2 - Check perpendicular force on member :

$UC_2 = M_{Ed} / M_{c.Rd}$ = **n.v.t.** **< 1**

3 - Check of the member slenderness :

$UC_3 = C_{max;buc} / C_{perm}$ = **44** **< 120**

4 - Check stress in member due to compression without excentricity:

$UC_4 = N_{E;d} / (C_{max;buc} \times N_{b;Rd})$ = **0,76** **< 1**

5 - Check stress in member due to compression with excentricity:

$UC_{5-1} = N_{E;d} / (C_{max;buc} \times N_{b;Rd})$ = **n.v.t.** **< 1**

$UC_{5-2} = N_{E;d} / N_{b;Rd} + k_{yy} \times (M_{y;Ed} + DM_{y;Ed}) / (C_{LT} \times M_{y;Rk})$ = **n.v.t.** **< 1**

6 - Check stress with combined buckling of two sections:

$UC_{5-1} = N_{E;d} / (C_{max;buc} \times N_{b;Rd})$ = **n.v.t.** **< 1**

$UC_{5-2} = N_{E;d} / N_{b;Rd} + k_{yy} \times (M_{y;Ed} + DM_{y;Ed}) / (C_{LT} \times M_{y;Rk})$ = **n.v.t.** **< 1**

7 - Check shear stress boltconnection:

$UC_7 = F_{v;Ed} / F_{v;Rd}$ = **0,73** **< 1**

8 - Check bearing stress boltconnection:

$UC_8 = F_{b;Ed} / F_{b;Rd}$ = **0,54** **< 1**

Remarks:

The maximum increase of stress or totalstress is(*2) : **$U.C_{max}$ = 0,76 = 76%**

(*1) Eventually, with the checks of the stresses, the cross-section reduction method is used according to prEN 1993-1-5

(*2) The total stress or increase of stress has been related to the permissible stress

Revision :	0	A	B	C	D	E	F
Date :	13-mrt-2012						
Name :	J Goddijn						
Checked :	J Boogert						

Order :	14509	**Dossier :**	13.039	**Berekening :**
Project :	Omleiding mast 52 tot 54 en noodmast 74, 150 kv-Lijn Leiden-Zoetermeer			
Part :	Mast 55			

Check equal leg angle-members according to Eurocode 3, prEN 1993-1-1 : 2003

File prEN 1993-1-1.revB.xls d.d. 2-32012, JG

Check section: *Vak 2 Horizontale Knikverkorters L55x55x6* *M08*

Memberforces : **(Attention! pressure = "-" and tension ="+")**

Compression:	N_{Sd}	=	-20,89	kN	***Combined forces diagonal:***			
Tension:	N_{Sd}	=	20,89	kN	$N_{comb1;c;s;d}$ (min. Compr. or tension)	=	0	kN
	$F_{perpend.;s;d}$	=	1,5	kN	$N_{comb2;c;s;d}$ (max. compression)	=	0	kN

Angle profile : *H55/55/6* (*1)

h	=	55	mm	I_y	=	172872	mm^4
b	=	55	mm	$W_{y;el;eff.1}$	=	4391	mm^3
t_f	=	6	mm	$W_{y;el;eff.2}$	=	11060	mm^3
y_s	=	15,6	mm	i_y	=	16,6	mm
A_{bruto}	=	631	mm^2	i_v	=	10,5	mm

Material :

Mat. qual. Fe360 / Fe510	=	Fe360		Permissible stress $f_{y;d}$	=	235,0	N/mm^2

Geometry section and bolts:

$L_{y;cr}$	=	1900	mm	No. bolts / end / flange	=	1	
$L_{v;cr}$	=	1900	mm	Type of bolts M / "	=	16	
$L_{tot\ (with\ comb.\ buckling)}$	=	0	mm	End distance bolt e1	=	30	mm
$a*L_{tot\ (with\ comb.\ buckling)}$	=	0	mm	Centre-centre spacing bolt s1	=	50	mm
$L_{perpendicular\ force}$	=	1900	mm	Edge distance bolt e2	=	25	mm
Position perpendicular force	=	1	(⌉=1, ⌋=2)	Boltquality 4.6/5.6/8.8/10.9	=	4,6	
Column profile?	=	1	no=1, yes=2	Rolled screw threads	=	1	
Thickness tie plate	=	6	mm	Dubble strap joint no=1, yes=2	=	1	

Summary checks :

1 - Check tension on member :

$UC_1 = N_{Ed} / N_{t.Rd}$ = **0,38** **< 1**

2 - Check perpendicular force on member :

$UC_2 = M_{Ed} / M_{c.Rd}$ = **0,69** **< 1**

3 - Check of the member slenderness :

$UC_3 = C_{max;buc} / C_{perm}$ = **180** **< 200 or 240**

4 - Check stress in member due to compression without excentricity:

$UC_4 = N_{E;d} / (C_{max;buc} \times N_{b;Rd})$ = **n.v.t.** **< 1**

5 - Check stress in member due to compression with excentricity:

$UC_{5-1} = N_{E;d} / (C_{max;buc} \times N_{b;Rd})$ = **0,63** **< 1**

$UC_{5-2} = N_{E;d} / N_{b;Rd} + k_{yy} \times (M_{y;Ed} + DM_{y;Ed}) / (C_{LT} \times M_{y;Rk})$ = **0,85** **< 1**

6 - Check stress with combined buckling of two sections:

$UC_{5-1} = N_{E;d} / (C_{max;buc} \times N_{b;Rd})$ = **n.v.t.** **< 1**

$UC_{5-2} = N_{E;d} / N_{b;Rd} + k_{yy} \times (M_{y;Ed} + DM_{y;Ed}) / (C_{LT} \times M_{y;Rk})$ = **n.v.t.** **< 1**

7 - Check shear stress boltconnection:

$UC_7 = F_{v;Ed} / F_{v;Rd}$ = **0,69** **< 1**

8 - Check bearing stress boltconnection:

$UC_8 = F_{b;Ed} / F_{b;Rd}$ = **0,62** **< 1**

Remarks:

The maximum increase of stress or totalstress is(*2) : **$U.C_{max}$ = 0,85 = 85%**

(*1) Eventually, with the checks of the stresses, the cross-section reduction method is used according to prEN 1993-1-5

(*2) The total stress or increase of stress has been related to the permissible stress

Revision :	0	A	B	C	D	E	F
Date :	13-mrt-2012						
Name :	J Goddijn						
Checked :	J Boogert						

Order :	14509	**Dossier :**	13.039	**Berekening :**
Project :	Omleiding mast 52 tot 54 en noodmast 74, 150 kv-Lijn Leiden-Zoetermeer			
Part :	Mast 55			

Check equal leg angle-members according to Eurocode 3, prEN 1993-1-1 : 2003

File prEN 1993-1-1.revB.xls d.d. 2-32012, JG

Check section: *Vak 2 Schuine Knikverkorters L55x55x6* *M09*

Memberforces : **(Attention! pressure = "-" and tension ="+")**

Compression:	N_{Sd}	=	*-28,83*	kN	***Combined forces diagonal:***			
Tension:	N_{Sd}	=	*28,83*	kN	$N_{comb1;c;s;d}$ (min. Compr. or tension)	=	*0*	kN
	$F_{perpend.;s;d}$	=	*0*	kN	$N_{comb2;c;s;d}$ (max. compression)	=	*0*	kN

Angle profile : *H55/55/6* (*1)

h	=	*55*	mm	I_y	=	*172872*	mm^4
b	=	*55*	mm	$W_{y;el;eff.1}$	=	*4391*	mm^3
t_f	=	*6*	mm	$W_{y;el;eff.2}$	=	*11060*	mm^3
y_s	=	*15,6*	mm	i_y	=	*16,6*	mm
A_{bruto}	=	*631*	mm^2	i_v	=	*10,5*	mm

Material :

Mat. qual. Fe360 / Fe510	=	*Fe360*		Permissible stress $f_{y;d}$	=	*235,0*	N/mm^2

Geometry section and bolts:

$L_{y;cr}$	=	*2620*	mm	No. bolts / end / flange	=	*1*	
$L_{v;cr}$	=	*2620*	mm	Type of bolts M / "	=	*16*	
L_{tot} (with comb. buckling)	=	*0*	mm	End distance bolt e1	=	*30*	mm
$a*L_{tot}$ (with comb. buckling)	=	*0*	mm	Centre-centre spacing bolt s1	=	*50*	mm
$L_{perpendicular\ force}$	=	*0*	mm	Edge distance bolt e2	=	*25*	mm
Position perpendicular force	=	*1*	(⌉=1, ⌋=2)	Boltquality 4.6/5.6/8.8/10.9	=	*4,6*	
Column profile?	=	*1*	no=1, yes=2	Rolled screw threads	=	*1*	
Thickness tie plate	=	*6*	mm	Dubble strap joint no=1, yes=2	=	*1*	

Summary checks :

1 - Check tension on member :

$UC_1 = N_{Ed} / N_{t.Rd}$ = **0,52** **< 1**

2 - Check perpendicular force on member :

$UC_2 = M_{Ed} / M_{c.Rd}$ = **n.v.t.** **< 1**

3 - Check of the member slenderness :

$UC_3 = C_{max;buc} / C_{perm}$ = **249** **< 200 or 240**

4 - Check stress in member due to compression without excentricity:

$UC_4 = N_{E;d} / (C_{max;buc} \times N_{b;Rd})$ = **n.v.t.** **< 1**

5 - Check stress in member due to compression with excentricity:

$UC_{5-1} = N_{E;d} / (C_{max;buc} \times N_{b;Rd})$ = **1,55** **> 1 !!**

$UC_{5-2} = N_{E;d} / N_{b;Rd} + k_{yy} \times (M_{y;Ed} + DM_{y;Ed}) / (C_{LT} \times M_{y;Rk})$ = **1,82** **> 1 !!**

6 - Check stress with combined buckling of two sections:

$UC_{5-1} = N_{E;d} / (C_{max;buc} \times N_{b;Rd})$ = **n.v.t.** **< 1**

$UC_{5-2} = N_{E;d} / N_{b;Rd} + k_{yy} \times (M_{y;Ed} + DM_{y;Ed}) / (C_{LT} \times M_{y;Rk})$ = **n.v.t.** **< 1**

7 - Check shear stress boltconnection:

$UC_7 = F_{v;Ed} / F_{v;Rd}$ = **0,96** **< 1**

8 - Check bearing stress boltconnection:

$UC_8 = F_{b;Ed} / F_{b;Rd}$ = **0,86** **< 1**

Remarks:

The maximum increase of stress or totalstress is(*2) : **$U.C_{max}$ = 1,82 = 182%**

(*1) Eventually, with the checks of the stresses, the cross-section reduction method is used according to prEN 1993-1-5

(*2) The total stress or increase of stress has been related to the permissible stress

Revision :	0	A	B	C	D	E	F
Date :	13-mrt-2012						
Name :	J Goddijn						
Checked :	J Boogert						

Order :	14509	**Dossier :**	13.039	**Berekening :**
Project :	Omleiding mast 52 tot 54 en noodmast 74, 150 kv-Lijn Leiden-Zoetermeer			
Part :	Mast 55			

D&C ENGINEERING

Check equal leg angle-members according to Eurocode 3, prEN 1993-1-1 : 2003

File prEN 1993-1-1.revB.xls d.d. 2-32012, JG

Check section: *Vak 2 Verticale verbanden L150x100x10* *M10*

Memberforces : **(Attention! pressure = "-" and tension ="+")**

Compression:	N_{Sd}	=	*-167,32*	kN	***Combined forces diagonal:***			
Tension:	N_{Sd}	=	*150,52*	kN	$N_{comb1;c;s;d}$ (min. Compr. or tension)	=	*0*	kN
	$F_{perpend.;s;d}$	=	*0*	kN	$N_{comb2;c;s;d}$ (max. compression)	=	*0*	kN

Angle profile : *H150/100/10* (*1)

h	=	*150*	mm	I_y	=	*5516683*	mm^4
b	=	*100*	mm	$W_{y;el;eff.1}$	=	*43563*	mm^3
t_f	=	*10*	mm	$W_{y;el;eff.2}$	=	*236120*	mm^3
y_s	=	*23,4*	mm	i_y	=	*47,8*	mm
A_{bruto}	=	*2418*	mm^2	i_v	=	*21,5*	mm

Material :

Mat. qual. Fe360 / Fe510	=	*Fe360*		Permissible stress $f_{y;d}$	=	*235,0*	N/mm^2

Geometry section and bolts:

$L_{y;cr}$	=	*4916*	mm	No. bolts / end / flange	=	*3*	
$L_{v;cr}$	=	*2458*	mm	Type of bolts M / "	=	*24*	
$L_{tot\ (with\ comb.\ buckling)}$	=	*0*	mm	End distance bolt e1	=	*50*	mm
$a*L_{tot\ (with\ comb.\ buckling)}$	=	*0*	mm	Centre-centre spacing bolt s1	=	*90*	mm
$L_{perpendicular\ force}$	=	*0*	mm	Edge distance bolt e2	=	*50*	mm
Position perpendicular force	=	*1*	(⌉=1, ⌋=2)	Boltquality 4.6/5.6/8.8/10.9	=	*4,6*	
Column profile?	=	*1*	no=1, yes=2	Rolled screw threads	=	*1*	
Thickness tie plate	=	*10*	mm	Dubble strap joint no=1, yes=2	=	*1*	

Summary checks :

1 - Check tension on member :

$UC_1 = N_{Ed} / N_{t.Rd}$ = **0,42** **< 1**

2 - Check perpendicular force on member :

$UC_2 = M_{Ed} / M_{c.Rd}$ = **n.v.t.** **< 1**

3 - Check of the member slenderness :

$UC_3 = C_{max;buc} / C_{perm}$ = **114** **< 200 or 240**

4 - Check stress in member due to compression without excentricity:

$UC_4 = N_{E;d} / (C_{max;buc} \times N_{b;Rd})$ = **0,62** **< 1**

5 - Check stress in member due to compression with excentricity:

$UC_{5-1} = N_{E;d} / (C_{max;buc} \times N_{b;Rd})$ = **n.v.t.** **< 1**

$UC_{5-2} = N_{E;d} / N_{b;Rd} + k_{yy} \times (M_{y;Ed} + DM_{y;Ed}) / (C_{LT} \times M_{y;Rk})$ = **n.v.t.** **< 1**

6 - Check stress with combined buckling of two sections:

$UC_{5-1} = N_{E;d} / (C_{max;buc} \times N_{b;Rd})$ = **n.v.t.** **< 1**

$UC_{5-2} = N_{E;d} / N_{b;Rd} + k_{yy} \times (M_{y;Ed} + DM_{y;Ed}) / (C_{LT} \times M_{y;Rk})$ = **n.v.t.** **< 1**

7 - Check shear stress boltconnection:

$UC_7 = F_{v;Ed} / F_{v;Rd}$ = **0,82** **< 1**

8 - Check bearing stress boltconnection:

$UC_8 = F_{b;Ed} / F_{b;Rd}$ = **0,45** **< 1**

Remarks:

The maximum increase of stress or totalstress is(*2) : **$U.C_{max}$ = 0,82 = 82%**

(*1) Eventually, with the checks of the stresses, the cross-section reduction method is used according to prEN 1993-1-5

(*2) The total stress or increase of stress has been related to the permissible stress

Revision :	0	A	B	C	D	E	F
Date :	13-mrt-2012						
Name :	J Goddijn						
Checked :	J Boogert						

Order :	14509	**Dossier :**	13.039	**Berekening :**
Project :	Omleiding mast 52 tot 54 en noodmast 74, 150 kv-Lijn Leiden-Zoetermeer			
Part :	Mast 55			

D&C ENGINEERING

Check equal leg angle-members according to Eurocode 3, prEN 1993-1-1 : 2003

File prEN 1993-1-1.revB.xls d.d. 2-32012, JG

Check section: *Vak 3 Randen L200x200x26* *M11*

Memberforces : **(Attention! pressure = "-" and tension ="+")**

Compression:	N_{Sd}	=	*-1473,98*	kN	***Combined forces diagonal:***			
Tension:	N_{Sd}	=	*1210,73*	kN	$N_{comb1;c;s;d}$ (min. Compr. or tension)	=	*0*	kN
	$F_{perpend.;s;d}$	=	*0*	kN	$N_{comb2;c;s;d}$ (max. compression)	=	*0*	kN

Angle profile : *H200/200/26* (*1)

h	=	*200*	mm	I_y	=	*35603980*	mm^4
b	=	*200*	mm	$W_{y;el;eff.1}$	=	*252744*	mm^3
t_f	=	*26*	mm	$W_{y;el;eff.2}$	=	*602125*	mm^3
y_s	=	*59,1*	mm	i_y	=	*60,4*	mm
A_{bruto}	=	*9759*	mm^2	i_v	=	*38,8*	mm

Material :

Mat. qual. Fe360 / Fe510	=	*Fe360*		Permissible stress $f_{y;d}$	=	*235,0*	N/mm^2

Geometry section and bolts:

$L_{y;cr}$	=	*1786*	mm	No. bolts / end / flange		=	*5*	**(Per flange !)**
$L_{v;cr}$	=	*1786*	mm	Type of bolts	M / "	=	*30*	
$L_{tot\ (with\ comb.\ buckling)}$	=	*0*	mm	End distance bolt	e1	=	*60*	mm
$a*L_{tot\ (with\ comb.\ buckling)}$	=	*0*	mm	Centre-centre spacing bolt	s1	=	*90*	mm
$L_{perpendicular\ force}$	=	*0*	mm	Edge distance bolt	e2	=	*45*	mm
Position perpendicular force	=	*1*	(⌉=1, ⌋=2)	Boltquality	4.6/5.6/8.8/10.9	=	*4,6*	
Column profile?	=	*2*	no=1, yes=2	Rolled screw threads		=	*1*	
Thickness tie plate	=	*12*	mm	Dubble strap joint no=1, yes=2		=	*2*	

Summary checks :

1 - Check tension on member :

$UC_1 = N_{Ed} / N_{t.Rd}$ = **0,58** **< 1**

2 - Check perpendicular force on member :

$UC_2 = M_{Ed} / M_{c.Rd}$ = **n.v.t.** **< 1**

3 - Check of the member slenderness :

$UC_3 = C_{max;buc} / C_{perm}$ = **46** **< 120**

4 - Check stress in member due to compression without excentricity:

$UC_4 = N_{E;d} / (C_{max;buc} \times N_{b;Rd})$ = **0,72** **< 1**

5 - Check stress in member due to compression with excentricity:

$UC_{5-1} = N_{E;d} / (C_{max;buc} \times N_{b;Rd})$ = **n.v.t.** **< 1**

$UC_{5-2} = N_{E;d} / N_{b;Rd} + k_{yy} \times (M_{y;Ed} + DM_{y;Ed}) / (C_{LT} \times M_{y;Rk})$ = **n.v.t.** **< 1**

6 - Check stress with combined buckling of two sections:

$UC_{5-1} = N_{E;d} / (C_{max;buc} \times N_{b;Rd})$ = **n.v.t.** **< 1**

$UC_{5-2} = N_{E;d} / N_{b;Rd} + k_{yy} \times (M_{y;Ed} + DM_{y;Ed}) / (C_{LT} \times M_{y;Rk})$ = **n.v.t.** **< 1**

7 - Check shear stress boltconnection:

$UC_7 = F_{v;Ed} / F_{v;Rd}$ = **0,68** **< 1**

8 - Check bearing stress boltconnection:

$UC_8 = F_{b;Ed} / F_{b;Rd}$ = **0,51** **< 1**

Remarks:

The maximum increase of stress or totalstress is(*2) : **$U.C_{max}$ = 0,72 = 72%**

(*1) Eventually, with the checks of the stresses, the cross-section reduction method is used according to prEN 1993-1-5

(*2) The total stress or increase of stress has been related to the permissible stress

Revision :	0	A	B	C	D	E	F
Date :	13-mrt-2012						
Name :	J Goddijn						
Checked :	J Boogert						

Order	:	14509	**Dossier :**	13.039	**Berekening :**
Project	:	Omleiding mast 52 tot 54 en noodmast 74, 150 kv-Lijn Leiden-Zoetermeer			
Part	:	Mast 55			

D&C ENGINEERING

Check equal leg angle-members according to Eurocode 3, prEN 1993-1-1 : 2003

File prEN 1993-1-1.revB.xls d.d. 2-32012, JG

Check section: *Vak 3 Horizontale Knikverkorters L55x55x6* *M12*

Memberforces : **(Attention! pressure = "-" and tension ="+")**

Compression:	N_{Sd}	=	*-8,74*	kN	***Combined forces diagonal:***			
Tension:	N_{Sd}	=	*8,74*	kN	$N_{comb1;c;s;d}$ (min. Compr. or tension)	=	*0*	kN
	$F_{perpend.;s;d}$	=	*1,5*	kN	$N_{comb2;c;s;d}$ (max. compression)	=	*0*	kN

Angle profile : *H55/55/6* (*1)

h	=	*55*	mm	I_y	=	*172872*	mm^4
b	=	*55*	mm	$W_{y;el;eff.1}$	=	*4391*	mm^3
t_f	=	*6*	mm	$W_{y;el;eff.2}$	=	*11060*	mm^3
y_s	=	*15,6*	mm	i_y	=	*16,6*	mm
A_{bruto}	=	*631*	mm^2	i_v	=	*10,5*	mm

Material :

Mat. qual. Fe360 / Fe510	=	*Fe360*		Permissible stress $f_{y;d}$	=	*235,0*	N/mm^2

Geometry section and bolts:

$L_{y;cr}$	=	*1676*	mm	No. bolts / end / flange	=	*1*	
$L_{v;cr}$	=	*1676*	mm	Type of bolts M / "	=	*16*	
$L_{tot\ (with\ comb.\ buckling)}$	=	*0*	mm	End distance bolt e1	=	*30*	mm
$a*L_{tot\ (with\ comb.\ buckling)}$	=	*0*	mm	Centre-centre spacing bolt s1	=	*50*	mm
$L_{perpendicular\ force}$	=	*1676*	mm	Edge distance bolt e2	=	*25*	mm
Position perpendicular force	=	*1*	(⌉=1, ⌋=2)	Boltquality 4.6/5.6/8.8/10.9	=	*4,6*	
Column profile?	=	*1*	no=1, yes=2	Rolled screw threads	=	*1*	
Thickness tie plate	=	*6*	mm	Dubble strap joint no=1, yes=2	=	*1*	

Summary checks :

1 - Check tension on member :

$UC_1 = N_{Ed} / N_{t.Rd}$ = **0,16** **< 1**

2 - Check perpendicular force on member :

$UC_2 = M_{Ed} / M_{c.Rd}$ = **0,61** **< 1**

3 - Check of the member slenderness :

$UC_3 = C_{max;buc} / C_{perm}$ = **159** **< 200 or 240**

4 - Check stress in member due to compression without excentricity:

$UC_4 = N_{E;d} / (C_{max;buc} \times N_{b;Rd})$ = **n.v.t.** **< 1**

5 - Check stress in member due to compression with excentricity:

$UC_{5-1} = N_{E;d} / (C_{max;buc} \times N_{b;Rd})$ = **0,21** **< 1**

$UC_{5-2} = N_{E;d} / N_{b;Rd} + k_{yy} \times (M_{y;Ed} + DM_{y;Ed}) / (C_{LT} \times M_{y;Rk})$ = **0,31** **< 1**

6 - Check stress with combined buckling of two sections:

$UC_{5-1} = N_{E;d} / (C_{max;buc} \times N_{b;Rd})$ = **n.v.t.** **< 1**

$UC_{5-2} = N_{E;d} / N_{b;Rd} + k_{yy} \times (M_{y;Ed} + DM_{y;Ed}) / (C_{LT} \times M_{y;Rk})$ = **n.v.t.** **< 1**

7 - Check shear stress boltconnection:

$UC_7 = F_{v;Ed} / F_{v;Rd}$ = **0,29** **< 1**

8 - Check bearing stress boltconnection:

$UC_8 = F_{b;Ed} / F_{b;Rd}$ = **0,26** **< 1**

Remarks:

The maximum increase of stress or totalstress is(*2) : **$U.C_{max}$ = 0,61 = 61%**

(*1) Eventually, with the checks of the stresses, the cross-section reduction method is used according to prEN 1993-1-5

(*2) The total stress or increase of stress has been related to the permissible stress

Revision :	0	A	B	C	D	E	F
Date :	13-mrt-2012						
Name :	J Goddijn						
Checked :	J Boogert						

Order :	14509	**Dossier :**	13.039 **Berekening :**
Project :	Omleiding mast 52 tot 54 en noodmast 74, 150 kv-Lijn Leiden-Zoetermeer		
Part :	Mast 55		

D&C ENGINEERING

Check equal leg angle-members according to Eurocode 3, prEN 1993-1-1 : 2003

File prEN 1993-1-1.revB.xls d.d. 2-32012, JG

Check section: *Vak 3 Verticale Knikverkorters L55x55x6* *M13*

Memberforces : **(Attention! pressure = "-" and tension ="+")**

Compression:	N_{Sd}	=	*-10,16*	kN	***Combined forces diagonal:***			
Tension:	N_{Sd}	=	*10,16*	kN	$N_{comb1;c;s;d}$ (min. Compr. or tension)	=	*0*	kN
	$F_{perpend.;s;d}$	=	*0*	kN	$N_{comb2;c;s;d}$ (max. compression)	=	*0*	kN

Angle profile : *H55/55/6* (*1)

h	=	*55*	mm	I_y	=	*172872*	mm^4
b	=	*55*	mm	$W_{y;el;eff.1}$	=	*4391*	mm^3
t_f	=	*6*	mm	$W_{y;el;eff.2}$	=	*11060*	mm^3
y_s	=	*15,6*	mm	i_y	=	*16,6*	mm
A_{bruto}	=	*631*	mm^2	i_v	=	*10,5*	mm

Material :

Mat. qual. Fe360 / Fe510	=	*Fe360*		Permissible stress $f_{y;d}$	=	*235,0*	N/mm^2

Geometry section and bolts:

$L_{y;cr}$	=	*2360*	mm	No. bolts / end / flange	=	*1*	
$L_{v;cr}$	=	*2360*	mm	Type of bolts M / "	=	*16*	
L_{tot} (with comb. buckling)	=	*0*	mm	End distance bolt e1	=	*30*	mm
$a*L_{tot}$ (with comb. buckling)	=	*0*	mm	Centre-centre spacing bolt s1	=	*50*	mm
$L_{perpendicular\ force}$	=	*0*	mm	Edge distance bolt e2	=	*25*	mm
Position perpendicular force	=	*1*	(⌉=1, ⌋=2)	Boltquality 4.6/5.6/8.8/10.9	=	*4,6*	
Column profile?	=	*1*	no=1, yes=2	Rolled screw threads	=	*1*	
Thickness tie plate	=	*6*	mm	Dubble strap joint no=1, yes=2	=	*1*	

Summary checks :

1 - Check tension on member :

$UC_1 = N_{Ed} / N_{t.Rd}$ = **0,18** **< 1**

2 - Check perpendicular force on member :

$UC_2 = M_{Ed} / M_{c.Rd}$ = **n.v.t.** **< 1**

3 - Check of the member slenderness :

$UC_3 = C_{max;buc} / C_{perm}$ = **224** **< 200 or 240**

4 - Check stress in member due to compression without excentricity:

$UC_4 = N_{E;d} / (C_{max;buc} \times N_{b;Rd})$ = **n.v.t.** **< 1**

5 - Check stress in member due to compression with excentricity:

$UC_{5-1} = N_{E;d} / (C_{max;buc} \times N_{b;Rd})$ = **0,45** **< 1**

$UC_{5-2} = N_{E;d} / N_{b;Rd} + k_{yy} \times (M_{y;Ed} + DM_{y;Ed}) / (C_{LT} \times M_{y;Rk})$ = **0,57** **< 1**

6 - Check stress with combined buckling of two sections:

$UC_{5-1} = N_{E;d} / (C_{max;buc} \times N_{b;Rd})$ = **n.v.t.** **< 1**

$UC_{5-2} = N_{E;d} / N_{b;Rd} + k_{yy} \times (M_{y;Ed} + DM_{y;Ed}) / (C_{LT} \times M_{y;Rk})$ = **n.v.t.** **< 1**

7 - Check shear stress boltconnection:

$UC_7 = F_{v;Ed} / F_{v;Rd}$ = **0,34** **< 1**

8 - Check bearing stress boltconnection:

$UC_8 = F_{b;Ed} / F_{b;Rd}$ = **0,30** **< 1**

Remarks:

The maximum increase of stress or totalstress is(*2) : **$U.C_{max}$ = 0,57 = 57%**

(*1) Eventually, with the checks of the stresses, the cross-section reduction method is used according to prEN 1993-1-5

(*2) The total stress or increase of stress has been related to the permissible stress

Revision :	0	A	B	C	D	E	F
Date :	13-mrt-2012						
Name :	J Goddijn						
Checked :	J Boogert						

Order :	14509	**Dossier :**	13.039	**Berekening :**
Project :	Omleiding mast 52 tot 54 en noodmast 74, 150 kv-Lijn Leiden-Zoetermeer			
Part :	Mast 55			

Check equal leg angle-members according to Eurocode 3, prEN 1993-1-1 : 2003

File prEN 1993-1-1.revB.xls d.d. 2-32012, JG

Check section: *Vak 3 Verticale verbanden L150x100x12* *M14*

Memberforces : **(Attention! pressure = "-" and tension ="+")**

Compression:	N_{Sd}	=	*-181,18*	kN	***Combined forces diagonal:***			
Tension:	N_{Sd}	=	*197,44*	kN	$N_{comb1;c;s;d}$ (min. Compr. or tension)	=	*0*	kN
	$F_{perpend.;s;d}$	=	*0*	kN	$N_{comb2;c;s;d}$ (max. compression)	=	*0*	kN

Angle profile : *H150/100/12* (*1)

h	=	*150*	mm	I_y	=	*6496055*	mm^4
b	=	*100*	mm	$W_{y;el;eff.1}$	=	*51628*	mm^3
t_f	=	*12*	mm	$W_{y;el;eff.2}$	=	*268690*	mm^3
y_s	=	*24,2*	mm	i_y	=	*47,5*	mm
A_{bruto}	=	*2874*	mm^2	i_v	=	*21,5*	mm

Material :

Mat. qual. Fe360 / Fe510	=	*Fe360*		Permissible stress $f_{y;d}$	=	*235,0*	N/mm^2

Geometry section and bolts:

$L_{y;cr}$	=	*5028*	mm	No. bolts / end / flange	=	*4*	
$L_{v;cr}$	=	*2514*	mm	Type of bolts M / "	=	*24*	
L_{tot} (with comb. buckling)	=	*0*	mm	End distance bolt e1	=	*50*	mm
$a*L_{tot}$ (with comb. buckling)	=	*0*	mm	Centre-centre spacing bolt s1	=	*90*	mm
$L_{perpendicular\ force}$	=	*0*	mm	Edge distance bolt e2	=	*50*	mm
Position perpendicular force	=	*1*	(⌉=1, ⌋=2)	Boltquality 4.6/5.6/8.8/10.9	=	*4,6*	
Column profile?	=	*1*	no=1, yes=2	Rolled screw threads	=	*1*	
Thickness tie plate	=	*10*	mm	Dubble strap joint no=1, yes=2	=	*1*	

Summary checks :

1 - Check tension on member :

$UC_1 = N_{Ed} / N_{t.Rd}$ = **0,46** **< 1**

2 - Check perpendicular force on member :

$UC_2 = M_{Ed} / M_{c.Rd}$ = **n.v.t.** **< 1**

3 - Check of the member slenderness :

$UC_3 = C_{max;buc} / C_{perm}$ = **117** **< 200 or 240**

4 - Check stress in member due to compression without excentricity:

$UC_4 = N_{E;d} / (C_{max;buc} \times N_{b;Rd})$ = **0,58** **< 1**

5 - Check stress in member due to compression with excentricity:

$UC_{5-1} = N_{E;d} / (C_{max;buc} \times N_{b;Rd})$ = **n.v.t.** **< 1**

$UC_{5-2} = N_{E;d} / N_{b;Rd} + k_{yy} \times (M_{y;Ed} + DM_{y;Ed}) / (C_{LT} \times M_{y;Rk})$ = **n.v.t.** **< 1**

6 - Check stress with combined buckling of two sections:

$UC_{5-1} = N_{E;d} / (C_{max;buc} \times N_{b;Rd})$ = **n.v.t.** **< 1**

$UC_{5-2} = N_{E;d} / N_{b;Rd} + k_{yy} \times (M_{y;Ed} + DM_{y;Ed}) / (C_{LT} \times M_{y;Rk})$ = **n.v.t.** **< 1**

7 - Check shear stress boltconnection:

$UC_7 = F_{v;Ed} / F_{v;Rd}$ = **0,73** **< 1**

8 - Check bearing stress boltconnection:

$UC_8 = F_{b;Ed} / F_{b;Rd}$ = **0,45** **< 1**

Remarks:

The maximum increase of stress or totalstress is(*2) : **$U.C_{max}$ = 0,73 = 73%**

(*1) Eventually, with the checks of the stresses, the cross-section reduction method is used according to prEN 1993-1-5

(*2) The total stress or increase of stress has been related to the permissible stress

Revision :	0	A	B	C	D	E	F
Date :	13-mrt-2012						
Name :	J Goddijn						
Checked :	J Boogert						

Order :	14509	**Dossier :**	13.039	**Berekening :**
Project :	Omleiding mast 52 tot 54 en noodmast 74, 150 kv-Lijn Leiden-Zoetermeer			
Part :	Mast 55			

D&C ENGINEERING

Check equal leg angle-members according to Eurocode 3, prEN 1993-1-1 : 2003

File prEN 1993-1-1.revB.xls d.d. 2-32012, JG

Check section: *Vak 4 Randen L200x200x20* *M15*

Memberforces : **(Attention! pressure = "-" and tension ="+")**

Compression:	N_{Sd}	=	*-1185,13*	kN	***Combined forces diagonal:***			
Tension:	N_{Sd}	=	*952,01*	kN	$N_{comb1;c;s;d}$ (min. Compr. or tension)	=	*0*	kN
	$F_{perpend.;s;d}$	=	*0*	kN	$N_{comb2;c;s;d}$ (max. compression)	=	*0*	kN

Angle profile : *H200/200/20* (*1)

h	=	*200*	mm	I_y	=	*35603980*	mm^4
b	=	*200*	mm	$W_{y;el;eff.1}$	=	*252744*	mm^3
t_f	=	*26*	mm	$W_{y;el;eff.2}$	=	*602125*	mm^3
y_s	=	*59,1*	mm	i_y	=	*60,4*	mm
A_{bruto}	=	*9759*	mm^2	i_v	=	*38,8*	mm

Material :

Mat. qual. Fe360 / Fe510	=	*Fe360*		Permissible stress $f_{y;d}$	=	*235,0*	N/mm^2

Geometry section and bolts:

$L_{y;cr}$	=	*1784*	mm	No. bolts / end / flange		=	*5*	**(Per flange !)**
$L_{v;cr}$	=	*1784*	mm	Type of bolts	M / "	=	*30*	
$L_{tot\ (with\ comb.\ buckling)}$	=	*0*	mm	End distance bolt	e1	=	*60*	mm
$a*L_{tot\ (with\ comb.\ buckling)}$	=	*0*	mm	Centre-centre spacing bolt	s1	=	*90*	mm
$L_{perpendicular\ force}$	=	*0*	mm	Edge distance bolt	e2	=	*45*	mm
Position perpendicular force	=	*1*	(⌉=1, ⌋=2)	Boltquality	4.6/5.6/8.8/10.9	=	*4,6*	
Column profile?	=	*2*	no=1, yes=2	Rolled screw threads		=	*1*	
Thickness tie plate	=	*12*	mm	Dubble strap joint no=1, yes=2		=	*2*	

Summary checks :

1 - Check tension on member :

$UC_1 = N_{Ed} / N_{t.Rd}$ = **0,46** **< 1**

2 - Check perpendicular force on member :

$UC_2 = M_{Ed} / M_{c.Rd}$ = **n.v.t.** **< 1**

3 - Check of the member slenderness :

$UC_3 = C_{max;buc} / C_{perm}$ = **46** **< 120**

4 - Check stress in member due to compression without excentricity:

$UC_4 = N_{E;d} / (C_{max;buc} \times N_{b;Rd})$ = **0,58** **< 1**

5 - Check stress in member due to compression with excentricity:

$UC_{5-1} = N_{E;d} / (C_{max;buc} \times N_{b;Rd})$ = **n.v.t.** **< 1**

$UC_{5-2} = N_{E;d} / N_{b;Rd} + k_{yy} \times (M_{y;Ed} + DM_{y;Ed}) / (C_{LT} \times M_{y;Rk})$ = **n.v.t.** **< 1**

6 - Check stress with combined buckling of two sections:

$UC_{5-1} = N_{E;d} / (C_{max;buc} \times N_{b;Rd})$ = **n.v.t.** **< 1**

$UC_{5-2} = N_{E;d} / N_{b;Rd} + k_{yy} \times (M_{y;Ed} + DM_{y;Ed}) / (C_{LT} \times M_{y;Rk})$ = **n.v.t.** **< 1**

7 - Check shear stress boltconnection:

$UC_7 = F_{v;Ed} / F_{v;Rd}$ = **0,55** **< 1**

8 - Check bearing stress boltconnection:

$UC_8 = F_{b;Ed} / F_{b;Rd}$ = **0,41** **< 1**

Remarks:

The maximum increase of stress or totalstress is(*2) : **$U.C_{max}$ = 0,58 = 58%**

(*1) Eventually, with the checks of the stresses, the cross-section reduction method is used according to prEN 1993-1-5

(*2) The total stress or increase of stress has been related to the permissible stress

Revision :	0	A	B	C	D	E	F
Date :	13-mrt-2012						
Name :	J Goddijn						
Checked :	J Boogert						

Order :	14509	**Dossier :**	13.039	**Berekening :**
Project :	Omleiding mast 52 tot 54 en noodmast 74, 150 kv-Lijn Leiden-Zoetermeer			
Part :	Mast 55			

Check equal leg angle-members according to Eurocode 3, prEN 1993-1-1 : 2003

File prEN 1993-1-1.revB.xls d.d. 2-32012, JG

Check section: *Vak 4 Horizontale Knikverkorters L50x50x5* *M16*

Memberforces : **(Attention! pressure = "-" and tension ="+")**

Compression:	N_{Sd}	=	*-9,47*	kN	***Combined forces diagonal:***			
Tension:	N_{Sd}	=	*9,47*	kN	$N_{comb1;c;s;d}$ (min. Compr. or tension)	=	*0*	kN
	$F_{perpend.;s;d}$	=	*1,5*	kN	$N_{comb2;c;s;d}$ (max. compression)	=	*0*	kN

Angle profile : *H50/50/5* (*1)

h	=	*50*	mm	I_y	=	*109643*	mm^4
b	=	*50*	mm	$W_{y;el;eff.1}$	=	*3049*	mm^3
t_f	=	*5*	mm	$W_{y;el;eff.2}$	=	*7811*	mm^3
y_s	=	*14,0*	mm	i_y	=	*15,1*	mm
A_{bruto}	=	*480*	mm^2	i_v	=	*9,6*	mm

Material :

Mat. qual. Fe360 / Fe510	=	*Fe360*		Permissible stress $f_{y;d}$	=	*235,0*	N/mm^2

Geometry section and bolts:

$L_{y;cr}$	=	*1460*	mm	No. bolts / end / flange	=	*1*	
$L_{v;cr}$	=	*1460*	mm	Type of bolts M / "	=	*16*	
$L_{tot\ (with\ comb.\ buckling)}$	=	*0*	mm	End distance bolt e1	=	*30*	mm
$a*L_{tot\ (with\ comb.\ buckling)}$	=	*0*	mm	Centre-centre spacing bolt s1	=	*50*	mm
$L_{perpendicular\ force}$	=	*1560*	mm	Edge distance bolt e2	=	*25*	mm
Position perpendicular force	=	*1*	(⌉=1, ⌋=2)	Boltquality 4.6/5.6/8.8/10.9	=	*4,6*	
Column profile?	=	*1*	no=1, yes=2	Rolled screw threads	=	*1*	
Thickness tie plate	=	*5*	mm	Dubble strap joint no=1, yes=2	=	*1*	

Summary checks :

1 - Check tension on member :

$UC_1 = N_{Ed} / N_{t.Rd}$ = **0,21** **< 1**

2 - Check perpendicular force on member :

$UC_2 = M_{Ed} / M_{c.Rd}$ = **0,82** **< 1**

3 - Check of the member slenderness :

$UC_3 = C_{max;buc} / C_{perm}$ = **152** **< 200 or 240**

4 - Check stress in member due to compression without excentricity:

$UC_4 = N_{E;d} / (C_{max;buc} \times N_{b;Rd})$ = **n.v.t.** **< 1**

5 - Check stress in member due to compression with excentricity:

$UC_{5-1} = N_{E;d} / (C_{max;buc} \times N_{b;Rd})$ = **0,28** **< 1**

$UC_{5-2} = N_{E;d} / N_{b;Rd} + k_{yy} \times (M_{y;Ed} + DM_{y;Ed}) / (C_{LT} \times M_{y;Rk})$ = **0,41** **< 1**

6 - Check stress with combined buckling of two sections:

$UC_{5-1} = N_{E;d} / (C_{max;buc} \times N_{b;Rd})$ = **n.v.t.** **< 1**

$UC_{5-2} = N_{E;d} / N_{b;Rd} + k_{yy} \times (M_{y;Ed} + DM_{y;Ed}) / (C_{LT} \times M_{y;Rk})$ = **n.v.t.** **< 1**

7 - Check shear stress boltconnection:

$UC_7 = F_{v;Ed} / F_{v;Rd}$ = **0,31** **< 1**

8 - Check bearing stress boltconnection:

$UC_8 = F_{b;Ed} / F_{b;Rd}$ = **0,34** **< 1**

Remarks:

The maximum increase of stress or totalstress is(*2) : **$U.C_{max}$ = 0,82 = 82%**

(*1) Eventually, with the checks of the stresses, the cross-section reduction method is used according to prEN 1993-1-5

(*2) The total stress or increase of stress has been related to the permissible stress

Revision :	0	A	B	C	D	E	F
Date :	13-mrt-2012						
Name :	J Goddijn						
Checked :	J Boogert						

Order :	14509	**Dossier :**	13.039	**Berekening :**
Project :	Omleiding mast 52 tot 54 en noodmast 74, 150 kv-Lijn Leiden-Zoetermeer			
Part :	Mast 55			

D&C ENGINEERING

Check equal leg angle-members according to Eurocode 3, prEN 1993-1-1 : 2003

File prEN 1993-1-1.revB.xls d.d. 2-32012, JG

Check section: *Vak 4 Horizontale staven L60x60x6* *M16a*

Memberforces : **(Attention! pressure = "-" and tension ="+")**

Compression:	N_{Sd}	=	*-4,4*	kN	***Combined forces diagonal:***			
Tension:	N_{Sd}	=	*4,79*	kN	$N_{comb1;c;s;d}$ (min. Compr. or tension)	=	*0*	kN
	$F_{perpend.;s;d}$	=	*1,5*	kN	$N_{comb2;c;s;d}$ (max. compression)	=	*0*	kN

Angle profile : *H60/60/6* (*1)

h	=	*60*	mm	I_y	=	*227925*	mm^4
b	=	*60*	mm	$W_{y;el;eff.1}$	=	*5285*	mm^3
t_f	=	*6*	mm	$W_{y;el;eff.2}$	=	*13507*	mm^3
y_s	=	*16,9*	mm	i_y	=	*18,2*	mm
A_{bruto}	=	*691*	mm^2	i_v	=	*11,5*	mm

Material :

Mat. qual. Fe360 / Fe510	=	*Fe360*		Permissible stress $f_{y;d}$	=	*235,0*	N/mm^2

Geometry section and bolts:

$L_{y;cr}$	=	*2920*	mm	No. bolts / end / flange	=	*1*	
$L_{v;cr}$	=	*2920*	mm	Type of bolts M / "	=	*16*	
$L_{tot\ (with\ comb.\ buckling)}$	=	*0*	mm	End distance bolt e1	=	*30*	mm
$a*L_{tot\ (with\ comb.\ buckling)}$	=	*0*	mm	Centre-centre spacing bolt s1	=	*50*	mm
$L_{perpendicular\ force}$	=	*2920*	mm	Edge distance bolt e2	=	*25*	mm
Position perpendicular force	=	*1*	(⌉=1, ⌋=2)	Boltquality 4.6/5.6/8.8/10.9	=	*4,6*	
Column profile?	=	*1*	no=1, yes=2	Rolled screw threads	=	*1*	
Thickness tie plate	=	*5*	mm	Dubble strap joint no=1, yes=2	=	*1*	

Summary checks :

1 - Check tension on member :

$UC_1 = N_{Ed} / N_{t.Rd}$ = **0,09** **< 1**

2 - Check perpendicular force on member :

$UC_2 = M_{Ed} / M_{c.Rd}$ = **0,88** **< 1**

3 - Check of the member slenderness :

$UC_3 = C_{max;buc} / C_{perm}$ = **253** **< 200 or 240**

4 - Check stress in member due to compression without excentricity:

$UC_4 = N_{E;d} / (C_{max;buc} \times N_{b;Rd})$ = **n.v.t.** **< 1**

5 - Check stress in member due to compression with excentricity:

$UC_{5-1} = N_{E;d} / (C_{max;buc} \times N_{b;Rd})$ = **0,22** **< 1**

$UC_{5-2} = N_{E;d} / N_{b;Rd} + k_{yy} \times (M_{y;Ed} + DM_{y;Ed}) / (C_{LT} \times M_{y;Rk})$ = **0,27** **< 1**

6 - Check stress with combined buckling of two sections:

$UC_{5-1} = N_{E;d} / (C_{max;buc} \times N_{b;Rd})$ = **n.v.t.** **< 1**

$UC_{5-2} = N_{E;d} / N_{b;Rd} + k_{yy} \times (M_{y;Ed} + DM_{y;Ed}) / (C_{LT} \times M_{y;Rk})$ = **n.v.t.** **< 1**

7 - Check shear stress boltconnection:

$UC_7 = F_{v;Ed} / F_{v;Rd}$ = **0,16** **< 1**

8 - Check bearing stress boltconnection:

$UC_8 = F_{b;Ed} / F_{b;Rd}$ = **0,17** **< 1**

Remarks:

The maximum increase of stress or totalstress is(*2) : **$U.C_{max}$ = 0,88 = 88%**

(*1) Eventually, with the checks of the stresses, the cross-section reduction method is used according to prEN 1993-1-5

(*2) The total stress or increase of stress has been related to the permissible stress

Revision :	0	A	B	C	D	E	F
Date :	13-mrt-2012						
Name :	J Goddijn						
Checked :	J Boogert						

Order :	14509	**Dossier :**	13.039	**Berekening :**
Project :	Omleiding mast 52 tot 54 en noodmast 74, 150 kv-Lijn Leiden-Zoetermeer			
Part :	Mast 55			

D&C ENGINEERING

Check equal leg angle-members according to Eurocode 3, prEN 1993-1-1 : 2003

File prEN 1993-1-1.revB.xls d.d. 2-32012, JG

Check section: *Vak 4 Verticale Knikverkorters L50x50x5* *M17*

Memberforces : **(Attention! pressure = "-" and tension ="+")**

Compression:	N_{Sd}	=	-7,32	kN	***Combined forces diagonal:***			
Tension:	N_{Sd}	=	7,32	kN	$N_{comb1;c;s;d}$ (min. Compr. or tension)	=	0	kN
	$F_{perpend.;s;d}$	=	0	kN	$N_{comb2;c;s;d}$ (max. compression)	=	0	kN

Angle profile : *H50/50/5* (*1)

h	=	50	mm	I_y	=	109643	mm^4
b	=	50	mm	$W_{y;el;eff.1}$	=	3049	mm^3
t_f	=	5	mm	$W_{y;el;eff.2}$	=	7811	mm^3
y_s	=	14,0	mm	i_y	=	15,1	mm
A_{bruto}	=	480	mm^2	i_v	=	9,6	mm

Material :

Mat. qual. Fe360 / Fe510	=	Fe360		Permissible stress $f_{y;d}$	=	235,0	N/mm^2

Geometry section and bolts:

$L_{y;cr}$	=	2080	mm	No. bolts / end / flange	=	1	
$L_{v;cr}$	=	2080	mm	Type of bolts M / "	=	16	
L_{tot} (with comb. buckling)	=	0	mm	End distance bolt e1	=	30	mm
$a*L_{tot}$ (with comb. buckling)	=	0	mm	Centre-centre spacing bolt s1	=	50	mm
$L_{perpendicular\ force}$	=	0	mm	Edge distance bolt e2	=	25	mm
Position perpendicular force	=	1	(⌉=1, ⌋=2)	Boltquality 4.6/5.6/8.8/10.9	=	4,6	
Column profile?	=	1	no=1, yes=2	Rolled screw threads	=	1	
Thickness tie plate	=	5	mm	Dubble strap joint no=1, yes=2	=	1	

Summary checks :

1 - Check tension on member :

$UC_1 = N_{Ed} / N_{t.Rd}$ = **0,16** **< 1**

2 - Check perpendicular force on member :

$UC_2 = M_{Ed} / M_{c.Rd}$ = **n.v.t.** **< 1**

3 - Check of the member slenderness :

$UC_3 = C_{max;buc} / C_{perm}$ = **217** **< 200 or 240**

4 - Check stress in member due to compression without excentricity:

$UC_4 = N_{E;d} / (C_{max;buc} \times N_{b;Rd})$ = **n.v.t.** **< 1**

5 - Check stress in member due to compression with excentricity:

$UC_{5-1} = N_{E;d} / (C_{max;buc} \times N_{b;Rd})$ = **0,40** **< 1**

$UC_{5-2} = N_{E;d} / N_{b;Rd} + k_{yy} \times (M_{y;Ed} + DM_{y;Ed}) / (C_{LT} \times M_{y;Rk})$ = **0,51** **< 1**

6 - Check stress with combined buckling of two sections:

$UC_{5-1} = N_{E;d} / (C_{max;buc} \times N_{b;Rd})$ = **n.v.t.** **< 1**

$UC_{5-2} = N_{E;d} / N_{b;Rd} + k_{yy} \times (M_{y;Ed} + DM_{y;Ed}) / (C_{LT} \times M_{y;Rk})$ = **n.v.t.** **< 1**

7 - Check shear stress boltconnection:

$UC_7 = F_{v;Ed} / F_{v;Rd}$ = **0,24** **< 1**

8 - Check bearing stress boltconnection:

$UC_8 = F_{b;Ed} / F_{b;Rd}$ = **0,26** **< 1**

Remarks:

The maximum increase of stress or totalstress is(*2) : **$U.C_{max}$ = 0,51 = 51%**

(*1) Eventually, with the checks of the stresses, the cross-section reduction method is used according to prEN 1993-1-5

(*2) The total stress or increase of stress has been related to the permissible stress

Revision :	0	A	B	C	D	E	F
Date :	13-mrt-2012						
Name :	J Goddijn						
Checked :	J Boogert						

Order :	14509	**Dossier :**	13.039	**Berekening :**
Project :	Omleiding mast 52 tot 54 en noodmast 74, 150 kv-Lijn Leiden-Zoetermeer			
Part :	Mast 55			

D&C ENGINEERING

Check equal leg angle-members according to Eurocode 3, prEN 1993-1-1 : 2003

File prEN 1993-1-1.revB.xls d.d. 2-32012, JG

Check section: *Vak 4 Verticale verbanden L150x100x14* *M18*

Memberforces : **(Attention! pressure = "-" and tension ="+")**

Compression:	N_{Sd}	=	-242,51	kN	***Combined forces diagonal:***			
Tension:	N_{Sd}	=	223,83	kN	$N_{comb1;c;s;d}$ (min. Compr. or tension)	=	0	kN
	$F_{perpend.;s;d}$	=	0	kN	$N_{comb2;c;s;d}$ (max. compression)	=	0	kN

Angle profile : *H150/100/14* (*1)

h	=	150	mm	I_y	=	7434686	mm^4
b	=	100	mm	$W_{y;el;eff.1}$	=	59460	mm^3
t_f	=	14	mm	$W_{y;el;eff.2}$	=	297816	mm^3
y_s	=	25,0	mm	i_y	=	47,3	mm
A_{bruto}	=	3322	mm^2	i_v	=	21,4	mm

Material :

Mat. qual. Fe360 / Fe510	=	Fe360		Permissible stress $f_{y;d}$	=	235,0	N/mm^2

Geometry section and bolts:

$L_{y;cr}$	=	4755	mm	No. bolts / end / flange	=	4	
$L_{v;cr}$	=	2377	mm	Type of bolts M / "	=	24	
L_{tot} (with comb. buckling)	=	0	mm	End distance bolt e1	=	50	mm
$a*L_{tot}$ (with comb. bucklingl)	=	0	mm	Centre-centre spacing bolt s1	=	90	mm
$L_{perpendicular\ force}$	=	0	mm	Edge distance bolt e2	=	50	mm
Position perpendicular force	=	1	(⌉=1, ⌋=2)	Boltquality 4.6/5.6/8.8/10.9	=	4,6	
Column profile?	=	1	no=1, yes=2	Rolled screw threads	=	1	
Thickness tie plate	=	12	mm	Dubble strap joint no=1, yes=2	=	1	

Summary checks :

1 - Check tension on member :

$UC_1 = N_{Ed} / N_{t.Rd}$ = **0,46** **< 1**

2 - Check perpendicular force on member :

$UC_2 = M_{Ed} / M_{c.Rd}$ = **n.v.t.** **< 1**

3 - Check of the member slenderness :

$UC_3 = C_{max;buc} / C_{perm}$ = **111** **< 200 or 240**

4 - Check stress in member due to compression without excentricity:

$UC_4 = N_{E;d} / (C_{max;buc} \times N_{b;Rd})$ = **0,63** **< 1**

5 - Check stress in member due to compression with excentricity:

$UC_{5-1} = N_{E;d} / (C_{max;buc} \times N_{b;Rd})$ = **n.v.t.** **< 1**

$UC_{5-2} = N_{E;d} / N_{b;Rd} + k_{yy} \times (M_{y;Ed} + DM_{y;Ed}) / (C_{LT} \times M_{y;Rk})$ = **n.v.t.** **< 1**

6 - Check stress with combined buckling of two sections:

$UC_{5-1} = N_{E;d} / (C_{max;buc} \times N_{b;Rd})$ = **n.v.t.** **< 1**

$UC_{5-2} = N_{E;d} / N_{b;Rd} + k_{yy} \times (M_{y;Ed} + DM_{y;Ed}) / (C_{LT} \times M_{y;Rk})$ = **n.v.t.** **< 1**

7 - Check shear stress boltconnection:

$UC_7 = F_{v;Ed} / F_{v;Rd}$ = **0,89** **< 1**

8 - Check bearing stress boltconnection:

$UC_8 = F_{b;Ed} / F_{b;Rd}$ = **0,42** **< 1**

Remarks:

The maximum increase of stress or totalstress is(*2) : **$U.C_{max}$ = 0,89 = 89%**

(*1) Eventually, with the checks of the stresses, the cross-section reduction method is used according to prEN 1993-1-5

(*2) The total stress or increase of stress has been related to the permissible stress

Revision :	0	A	B	C	D	E	F
Date :	13-mrt-2012						
Name :	J Goddijn						
Checked :	J Boogert						

Order :	14509	**Dossier :**	13.039	**Berekening :**
Project :	Omleiding mast 52 tot 54 en noodmast 74, 150 kv-Lijn Leiden-Zoetermeer			
Part :	Mast 55			

D&C ENGINEERING

Check equal leg angle-members according to Eurocode 3, prEN 1993-1-1 : 2003

File prEN 1993-1-1.revB.xls d.d. 2-32012, JG

Check section: *Vak 5 Randen L200x200x20* *M19*

Memberforces : **(Attention! pressure = "-" and tension ="+")**

Compression:	N_{Sd}	=	-981,56	kN	***Combined forces diagonal:***			
Tension:	N_{Sd}	=	769,91	kN	$N_{comb1;c;s;d}$ (min. Compr. or tension)	=	0	kN
	$F_{perpend.;s;d}$	=	0	kN	$N_{comb2;c;s;d}$ (max. compression)	=	0	kN

Angle profile : *H200/200/20* (*1)

h	=	200	mm	I_y	=	35603980	mm^4
b	=	200	mm	$W_{y;el;eff.1}$	=	252744	mm^3
t_f	=	26	mm	$W_{y;el;eff.2}$	=	602125	mm^3
y_s	=	59,1	mm	i_y	=	60,4	mm
A_{bruto}	=	9759	mm^2	i_v	=	38,8	mm

Material :

Mat. qual. Fe360 / Fe510	=	Fe360		Permissible stress $f_{y;d}$	=	235,0	N/mm^2

Geometry section and bolts:

$L_{y;cr}$	=	1784	mm	No. bolts / end / flange	=	6	**(Per flange !)**
$L_{v;cr}$	=	1784	mm	Type of bolts M / "	=	30	
L_{tot} (with comb. buckling)	=	0	mm	End distance bolt e1	=	50	mm
$a*L_{tot}$ (with comb. buckling)	=	0	mm	Centre-centre spacing bolt s1	=	110	mm
$L_{perpendicular\ force}$	=	0	mm	Edge distance bolt e2	=	45	mm
Position perpendicular force	=	1	(⌉=1, ⌋=2)	Boltquality 4.6/5.6/8.8/10.9	=	4,6	
Column profile?	=	2	no=1, yes=2	Rolled screw threads	=	1	
Thickness tie plate	=	16	mm	Dubble strap joint no=1, yes=2	=	1	

Summary checks :

1 - Check tension on member :

$UC_1 = N_{Ed} / N_{t.Rd}$ = **0,37** **< 1**

2 - Check perpendicular force on member :

$UC_2 = M_{Ed} / M_{c.Rd}$ = **n.v.t.** **< 1**

3 - Check of the member slenderness :

$UC_3 = C_{max;buc} / C_{perm}$ = **46** **< 120**

4 - Check stress in member due to compression without excentricity:

$UC_4 = N_{E;d} / (C_{max;buc} \times N_{b;Rd})$ = **0,48** **< 1**

5 - Check stress in member due to compression with excentricity:

$UC_{5-1} = N_{E;d} / (C_{max;buc} \times N_{b;Rd})$ = **n.v.t.** **< 1**

$UC_{5-2} = N_{E;d} / N_{b;Rd} + k_{yy} \times (M_{y;Ed} + DM_{y;Ed}) / (C_{LT} \times M_{y;Rk})$ = **n.v.t.** **< 1**

6 - Check stress with combined buckling of two sections:

$UC_{5-1} = N_{E;d} / (C_{max;buc} \times N_{b;Rd})$ = **n.v.t.** **< 1**

$UC_{5-2} = N_{E;d} / N_{b;Rd} + k_{yy} \times (M_{y;Ed} + DM_{y;Ed}) / (C_{LT} \times M_{y;Rk})$ = **n.v.t.** **< 1**

7 - Check shear stress boltconnection:

$UC_7 = F_{v;Ed} / F_{v;Rd}$ = **0,76** **< 1**

8 - Check bearing stress boltconnection:

$UC_8 = F_{b;Ed} / F_{b;Rd}$ = **0,43** **< 1**

Remarks:

The maximum increase of stress or totalstress is(*2) : **$U.C_{max}$ = 0,76 = 76%**

(*1) Eventually, with the checks of the stresses, the cross-section reduction method is used according to prEN 1993-1-5

(*2) The total stress or increase of stress has been related to the permissible stress

Revision :	0	A	B	C	D	E	F
Date :	13-mrt-2012						
Name :	J Goddijn						
Checked :	J Boogert						

Order :	14509	**Dossier :**	13.039	**Berekening :**
Project :	Omleiding mast 52 tot 54 en noodmast 74, 150 kv-Lijn Leiden-Zoetermeer			
Part :	Mast 55			

Check equal leg angle-members according to Eurocode 3, prEN 1993-1-1 : 2003

File prEN 1993-1-1.revB.xls d.d. 2-32012, JG

Check section: *Vak 5 Horizontale Knikverkorters L50x50x5* *M20*

Memberforces : **(Attention! pressure = "-" and tension ="+")**

Compression:	N_{Sd}	=	-16,33	kN	***Combined forces diagonal:***			
Tension:	N_{Sd}	=	16,33	kN	$N_{comb1;c;s;d}$ (min. Compr. or tension)	=	0	kN
	$F_{perpend.;s;d}$	=	1,5	kN	$N_{comb2;c;s;d}$ (max. compression)	=	0	kN

Angle profile : *H50/50/5* (*1)

h	=	50	mm	I_y	=	109643	mm^4
b	=	50	mm	$W_{y;el;eff.1}$	=	3049	mm^3
t_f	=	5	mm	$W_{y;el;eff.2}$	=	7811	mm^3
y_s	=	14,0	mm	i_y	=	15,1	mm
A_{bruto}	=	480	mm^2	i_v	=	9,6	mm

Material :

Mat. qual. Fe360 / Fe510	=	Fe360		Permissible stress $f_{y;d}$	=	235,0	N/mm^2

Geometry section and bolts:

$L_{y;cr}$	=	1250	mm	No. bolts / end / flange	=	1	
$L_{v;cr}$	=	1250	mm	Type of bolts M / "	=	16	
$L_{tot\ (with\ comb.\ buckling)}$	=	0	mm	End distance bolt e1	=	30	mm
$a*L_{tot\ (with\ comb.\ buckling)}$	=	0	mm	Centre-centre spacing bolt s1	=	50	mm
$L_{perpendicular\ force}$	=	1250	mm	Edge distance bolt e2	=	25	mm
Position perpendicular force	=	1	(⌉=1, ⌋=2)	Boltquality 4.6/5.6/8.8/10.9	=	4,6	
Column profile?	=	1	no=1, yes=2	Rolled screw threads	=	1	
Thickness tie plate	=	5	mm	Dubble strap joint no=1, yes=2	=	1	

Summary checks :

1 - Check tension on member :

$UC_1 = N_{Ed} / N_{t.Rd}$ = **0,35** **< 1**

2 - Check perpendicular force on member :

$UC_2 = M_{Ed} / M_{c.Rd}$ = **0,65** **< 1**

3 - Check of the member slenderness :

$UC_3 = C_{max;buc} / C_{perm}$ = **130** **< 200 or 240**

4 - Check stress in member due to compression without excentricity:

$UC_4 = N_{E;d} / (C_{max;buc} \times N_{b;Rd})$ = **n.v.t.** **< 1**

5 - Check stress in member due to compression with excentricity:

$UC_{5-1} = N_{E;d} / (C_{max;buc} \times N_{b;Rd})$ = **0,37** **< 1**

$UC_{5-2} = N_{E;d} / N_{b;Rd} + k_{yy} \times (M_{y;Ed} + DM_{y;Ed}) / (C_{LT} \times M_{y;Rk})$ = **0,59** **< 1**

6 - Check stress with combined buckling of two sections:

$UC_{5-1} = N_{E;d} / (C_{max;buc} \times N_{b;Rd})$ = **n.v.t.** **< 1**

$UC_{5-2} = N_{E;d} / N_{b;Rd} + k_{yy} \times (M_{y;Ed} + DM_{y;Ed}) / (C_{LT} \times M_{y;Rk})$ = **n.v.t.** **< 1**

7 - Check shear stress boltconnection:

$UC_7 = F_{v;Ed} / F_{v;Rd}$ = **0,54** **< 1**

8 - Check bearing stress boltconnection:

$UC_8 = F_{b;Ed} / F_{b;Rd}$ = **0,58** **< 1**

Remarks:

The maximum increase of stress or totalstress is(*2) : **$U.C_{max}$ = 0,65 = 65%**

(*1) Eventually, with the checks of the stresses, the cross-section reduction method is used according to prEN 1993-1-5

(*2) The total stress or increase of stress has been related to the permissible stress

Revision :	0	A	B	C	D	E	F
Date :	13-mrt-2012						
Name :	J Goddijn						
Checked :	J Boogert						

Order :	14509	**Dossier :**	13.039	**Berekening :**
Project :	Omleiding mast 52 tot 54 en noodmast 74, 150 kv-Lijn Leiden-Zoetermeer			
Part :	Mast 55			

Check equal leg angle-members according to Eurocode 3, prEN 1993-1-1 : 2003

File prEN 1993-1-1.revB.xls d.d. 2-32012, JG

Check section: *Vak 5 Verticale Knikverkorters L50x50x5* *M21*

Memberforces : **(Attention! pressure = "-" and tension ="+")**

Compression:	N_{Sd}	=	*-29,39*	kN	***Combined forces diagonal:***			
Tension:	N_{Sd}	=	*29,39*	kN	$N_{comb1;c;s;d}$ (min. Compr. or tension)	=	*0*	kN
	$F_{perpend.;s;d}$	=	*0*	kN	$N_{comb2;c;s;d}$ (max. compression)	=	*0*	kN

Angle profile : *H50/50/5* (*1)

h	=	*50*	mm	I_y	=	*109643*	mm^4
b	=	*50*	mm	$W_{y;el;eff.1}$	=	*3049*	mm^3
t_f	=	*5*	mm	$W_{y;el;eff.2}$	=	*7811*	mm^3
y_s	=	*14,0*	mm	i_y	=	*15,1*	mm
A_{bruto}	=	*480*	mm^2	i_v	=	*9,6*	mm

Material :

Mat. qual. Fe360 / Fe510	=	*Fe360*		Permissible stress $f_{y;d}$	=	*235,0*	N/mm^2

Geometry section and bolts:

$L_{y;cr}$	=	*1720*	mm	No. bolts / end / flange	=	*1*	
$L_{v;cr}$	=	*1720*	mm	Type of bolts M / "	=	*16*	
$L_{tot\ (with\ comb.\ buckling)}$	=	*0*	mm	End distance bolt e1	=	*30*	mm
$a*L_{tot\ (with\ comb.\ buckling)}$	=	*0*	mm	Centre-centre spacing bolt s1	=	*50*	mm
$L_{perpendicular\ force}$	=	*0*	mm	Edge distance bolt e2	=	*25*	mm
Position perpendicular force	=	*1*	(⌉=1, ⌋=2)	Boltquality 4.6/5.6/8.8/10.9	=	*4,6*	
Column profile?	=	*1*	no=1, yes=2	Rolled screw threads	=	*1*	
Thickness tie plate	=	*12*	mm	Dubble strap joint no=1, yes=2	=	*1*	

Summary checks :

1 - Check tension on member :

$UC_1 = N_{Ed} / N_{t.Rd}$ = **0,64** **< 1**

2 - Check perpendicular force on member :

$UC_2 = M_{Ed} / M_{c.Rd}$ = **n.v.t.** **< 1**

3 - Check of the member slenderness :

$UC_3 = C_{max;buc} / C_{perm}$ = **179** **< 200 or 240**

4 - Check stress in member due to compression without excentricity:

$UC_4 = N_{E;d} / (C_{max;buc} \times N_{b;Rd})$ = **n.v.t.** **< 1**

5 - Check stress in member due to compression with excentricity:

$UC_{5-1} = N_{E;d} / (C_{max;buc} \times N_{b;Rd})$ = **1,14** **> 1 !!**

$UC_{5-2} = N_{E;d} / N_{b;Rd} + k_{yy} \times (M_{y;Ed} + DM_{y;Ed}) / (C_{LT} \times M_{y;Rk})$ = **1,52** **> 1 !!**

6 - Check stress with combined buckling of two sections:

$UC_{5-1} = N_{E;d} / (C_{max;buc} \times N_{b;Rd})$ = **n.v.t.** **< 1**

$UC_{5-2} = N_{E;d} / N_{b;Rd} + k_{yy} \times (M_{y;Ed} + DM_{y;Ed}) / (C_{LT} \times M_{y;Rk})$ = **n.v.t.** **< 1**

7 - Check shear stress boltconnection:

$UC_7 = F_{v;Ed} / F_{v;Rd}$ = **0,97** **< 1**

8 - Check bearing stress boltconnection:

$UC_8 = F_{b;Ed} / F_{b;Rd}$ = **1,05** **> 1 !!**

Remarks:

The maximum increase of stress or totalstress is(*2) : **$U.C_{max}$ = 1,52 = 152%**

(*1) Eventually, with the checks of the stresses, the cross-section reduction method is used according to prEN 1993-1-5

(*2) The total stress or increase of stress has been related to the permissible stress

Revision :	0	A	B	C	D	E	F
Date :	13-mrt-2012						
Name :	J Goddijn						
Checked :	J Boogert						

Order :	14509	**Dossier :**	13.039	**Berekening :**
Project :	Omleiding mast 52 tot 54 en noodmast 74, 150 kv-Lijn Leiden-Zoetermeer			
Part :	Mast 55			

Check equal leg angle-members according to Eurocode 3, prEN 1993-1-1 : 2003

File prEN 1993-1-1.revB.xls d.d. 2-32012, JG

Check section: *Vak 5 Verticale verbanden L150x100x12* *M21a*

Memberforces : **(Attention! pressure = "-" and tension ="+")**

Compression:	N_{Sd}	=	*-262,06*	kN	***Combined forces diagonal:***			
Tension:	N_{Sd}	=	*279,54*	kN	$N_{comb1;c;s;d}$ (min. Compr. or tension)	=	*0*	kN
	$F_{perpend.;s;d}$	=	*0*	kN	$N_{comb2;c;s;d}$ (max. compression)	=	*0*	kN

Angle profile : *H150/100/12* (*1)

h	=	*150*	mm	I_y	=	*6496055*	mm^4
b	=	*100*	mm	$W_{y;el;eff.1}$	=	*51628*	mm^3
t_f	=	*12*	mm	$W_{y;el;eff.2}$	=	*268690*	mm^3
y_s	=	*24,2*	mm	i_y	=	*47,5*	mm
A_{bruto}	=	*2874*	mm^2	i_v	=	*21,5*	mm

Material :

Mat. qual. Fe360 / Fe510	=	*Fe360*		Permissible stress $f_{y;d}$	=	*235,0*	N/mm^2

Geometry section and bolts:

$L_{y;cr}$	=	*4360*	mm	No. bolts / end / flange	=	*5*	
$L_{v;cr}$	=	*2180*	mm	Type of bolts M / "	=	*24*	
$L_{tot\ (with\ comb.\ buckling)}$	=	*0*	mm	End distance bolt e1	=	*50*	mm
$a*L_{tot\ (with\ comb.\ buckling)}$	=	*0*	mm	Centre-centre spacing bolt s1	=	*90*	mm
$L_{perpendicular\ force}$	=	*0*	mm	Edge distance bolt e2	=	*50*	mm
Position perpendicular force	=	*1*	(⌉=1, ⌋=2)	Boltquality 4.6/5.6/8.8/10.9	=	*4,6*	
Column profile?	=	*1*	no=1, yes=2	Rolled screw threads	=	*1*	
Thickness tie plate	=	*12*	mm	Dubble strap joint no=1, yes=2	=	*1*	

Summary checks :

1 - Check tension on member :

$UC_1 = N_{Ed} / N_{t.Rd}$ = **0,66** **< 1**

2 - Check perpendicular force on member :

$UC_2 = M_{Ed} / M_{c.Rd}$ = **n.v.t.** **< 1**

3 - Check of the member slenderness :

$UC_3 = C_{max;buc} / C_{perm}$ = **102** **< 200 or 240**

4 - Check stress in member due to compression without excentricity:

$UC_4 = N_{E;d} / (C_{max;buc} \times N_{b;Rd})$ = **0,71** **< 1**

5 - Check stress in member due to compression with excentricity:

$UC_{5-1} = N_{E;d} / (C_{max;buc} \times N_{b;Rd})$ = **n.v.t.** **< 1**

$UC_{5-2} = N_{E;d} / N_{b;Rd} + k_{yy} \times (M_{y;Ed} + DM_{y;Ed}) / (C_{LT} \times M_{y;Rk})$ = **n.v.t.** **< 1**

6 - Check stress with combined buckling of two sections:

$UC_{5-1} = N_{E;d} / (C_{max;buc} \times N_{b;Rd})$ = **n.v.t.** **< 1**

$UC_{5-2} = N_{E;d} / N_{b;Rd} + k_{yy} \times (M_{y;Ed} + DM_{y;Ed}) / (C_{LT} \times M_{y;Rk})$ = **n.v.t.** **< 1**

7 - Check shear stress boltconnection:

$UC_7 = F_{v;Ed} / F_{v;Rd}$ = **0,82** **< 1**

8 - Check bearing stress boltconnection:

$UC_8 = F_{b;Ed} / F_{b;Rd}$ = **0,42** **< 1**

Remarks:

The maximum increase of stress or totalstress is(*2) : **$U.C_{max}$ = 0,82 = 82%**

(*1) Eventually, with the checks of the stresses, the cross-section reduction method is used according to prEN 1993-1-5

(*2) The total stress or increase of stress has been related to the permissible stress

Revision :	0	A	B	C	D	E	F
Date :	13-mrt-2012						
Name :	J Goddijn						
Checked :	J Boogert						

Order :	14509	**Dossier :**	13.039	**Berekening :**
Project :	Omleiding mast 52 tot 54 en noodmast 74, 150 kv-Lijn Leiden-Zoetermeer			
Part :	Mast 55			

D&C ENGINEERING

Check equal leg angle-members according to Eurocode 3, prEN 1993-1-1 : 2003

File prEN 1993-1-1.revB.xls d.d. 2-32012, JG

Check section: *Vak 6 Randen L200x200x16* *M22*

Memberforces : **(Attention! pressure = "-" and tension ="+")**

Compression:	N_{Sd}	=	*-939,9*	kN	***Combined forces diagonal:***			
Tension:	N_{Sd}	=	*764,96*	kN	$N_{comb1;c;s;d}$ (min. Compr. or tension)	=	*0*	kN
	$F_{perpend.;s;d}$	=	*0*	kN	$N_{comb2;c;s;d}$ (max. compression)	=	*0*	kN

Angle profile : *H200/200/16* (*1)

h	=	*200*	mm	I_y	=	*35603980*	mm^4
b	=	*200*	mm	$W_{y;el;eff.1}$	=	*252744*	mm^3
t_f	=	*26*	mm	$W_{y;el;eff.2}$	=	*602125*	mm^3
y_s	=	*59,1*	mm	i_y	=	*60,4*	mm
A_{bruto}	=	*9759*	mm^2	i_v	=	*38,8*	mm

Material :

Mat. qual. Fe360 / Fe510	=	*Fe360*		Permissible stress $f_{y;d}$	=	*235,0*	N/mm^2

Geometry section and bolts:

$L_{y;cr}$	=	*1784*	mm	No. bolts / end / flange		=	*6*	**(Per flange !)**
$L_{v;cr}$	=	*1784*	mm	Type of bolts	M / "	=	*30*	
$L_{tot\ (with\ comb.\ buckling)}$	=	*0*	mm	End distance bolt	e1	=	*50*	mm
$a*L_{tot\ (with\ comb.\ buckling)}$	=	*0*	mm	Centre-centre spacing bolt	s1	=	*110*	mm
$L_{perpendicular\ force}$	=	*0*	mm	Edge distance bolt	e2	=	*45*	mm
Position perpendicular force	=	*1*	(⌉=1, ⌋=2)	Boltquality	4.6/5.6/8.8/10.9	=	*4,6*	
Column profile?	=	*2*	no=1, yes=2	Rolled screw threads		=	*1*	
Thickness tie plate	=	*16*	mm	Dubble strap joint no=1, yes=2		=	*1*	

Summary checks :

1 - Check tension on member :

$UC_1 = N_{Ed} / N_{t.Rd}$ = **0,37** **< 1**

2 - Check perpendicular force on member :

$UC_2 = M_{Ed} / M_{c.Rd}$ = **n.v.t.** **< 1**

3 - Check of the member slenderness :

$UC_3 = C_{max;buc} / C_{perm}$ = **46** **< 120**

4 - Check stress in member due to compression without excentricity:

$UC_4 = N_{E;d} / (C_{max;buc} \times N_{b;Rd})$ = **0,46** **< 1**

5 - Check stress in member due to compression with excentricity:

$UC_{5-1} = N_{E;d} / (C_{max;buc} \times N_{b;Rd})$ = **n.v.t.** **< 1**

$UC_{5-2} = N_{E;d} / N_{b;Rd} + k_{yy} \times (M_{y;Ed} + DM_{y;Ed}) / (C_{LT} \times M_{y;Rk})$ = **n.v.t.** **< 1**

6 - Check stress with combined buckling of two sections:

$UC_{5-1} = N_{E;d} / (C_{max;buc} \times N_{b;Rd})$ = **n.v.t.** **< 1**

$UC_{5-2} = N_{E;d} / N_{b;Rd} + k_{yy} \times (M_{y;Ed} + DM_{y;Ed}) / (C_{LT} \times M_{y;Rk})$ = **n.v.t.** **< 1**

7 - Check shear stress boltconnection:

$UC_7 = F_{v;Ed} / F_{v;Rd}$ = **0,73** **< 1**

8 - Check bearing stress boltconnection:

$UC_8 = F_{b;Ed} / F_{b;Rd}$ = **0,43** **< 1**

Remarks:

The maximum increase of stress or totalstress is(*2) : **$U.C_{max}$ = 0,73 = 73%**

(*1) Eventually, with the checks of the stresses, the cross-section reduction method is used according to prEN 1993-1-5

(*2) The total stress or increase of stress has been related to the permissible stress

Revision :	0	A	B	C	D	E	F
Date :	13-mrt-2012						
Name :	J Goddijn						
Checked :	J Boogert						

Order :	14509	**Dossier :**	13.039	**Berekening :**
Project :	Omleiding mast 52 tot 54 en noodmast 74, 150 kv-Lijn Leiden-Zoetermeer			
Part :	Mast 55			

Check equal leg angle-members according to Eurocode 3, prEN 1993-1-1 : 2003

File prEN 1993-1-1.revB.xls d.d. 2-32012, JG

Check section: *Vak 6 Verticale verbanden L150x100x12* *M23*

Memberforces : **(Attention! pressure = "-" and tension ="+")**

Compression:	N_{Sd}	=	*-195,42*	kN	***Combined forces diagonal:***			
Tension:	N_{Sd}	=	*194,5*	kN	$N_{comb1;c;s;d}$ (min. Compr. or tension)	=	*0*	kN
	$F_{perpend.;s;d}$	=	*0*	kN	$N_{comb2;c;s;d}$ (max. compression)	=	*0*	kN

Angle profile : *H150/100/12* (*1)

h	=	*150*	mm	I_y	=	*6496055*	mm^4
b	=	*100*	mm	$W_{y;el;eff.1}$	=	*51628*	mm^3
t_f	=	*12*	mm	$W_{y;el;eff.2}$	=	*268690*	mm^3
y_s	=	*24,2*	mm	i_y	=	*47,5*	mm
A_{bruto}	=	*2874*	mm^2	i_v	=	*21,5*	mm

Material :

Mat. qual. Fe360 / Fe510	=	*Fe360*		Permissible stress $f_{y;d}$	=	*235,0*	N/mm^2

Geometry section and bolts:

$L_{y;cr}$	=	*4765*	mm	No. bolts / end / flange	=	*5*	
$L_{v;cr}$	=	*2382*	mm	Type of bolts M / "	=	*24*	
L_{tot} (with comb. buckling)	=	*0*	mm	End distance bolt e1	=	*50*	mm
$a*L_{tot}$ (with comb. bucklingl)	=	*0*	mm	Centre-centre spacing bolt s1	=	*90*	mm
$L_{perpendicular\ force}$	=	*0*	mm	Edge distance bolt e2	=	*40*	mm
Position perpendicular force	=	*1*	(⌉=1, ⌋=2)	Boltquality 4.6/5.6/8.8/10.9	=	*4,6*	
Column profile?	=	*1*	no=1, yes=2	Rolled screw threads	=	*1*	
Thickness tie plate	=	*12*	mm	Dubble strap joint no=1, yes=2	=	*1*	

Summary checks :

1 - Check tension on member :

$UC_1 = N_{Ed} / N_{t.Rd}$ = **0,46** **< 1**

2 - Check perpendicular force on member :

$UC_2 = M_{Ed} / M_{c.Rd}$ = **n.v.t.** **< 1**

3 - Check of the member slenderness :

$UC_3 = C_{max;buc} / C_{perm}$ = **111** **< 200 or 240**

4 - Check stress in member due to compression without excentricity:

$UC_4 = N_{E;d} / (C_{max;buc} \times N_{b;Rd})$ = **0,59** **< 1**

5 - Check stress in member due to compression with excentricity:

$UC_{5-1} = N_{E;d} / (C_{max;buc} \times N_{b;Rd})$ = **n.v.t.** **< 1**

$UC_{5-2} = N_{E;d} / N_{b;Rd} + k_{yy} \times (M_{y;Ed} + DM_{y;Ed}) / (C_{LT} \times M_{y;Rk})$ = **n.v.t.** **< 1**

6 - Check stress with combined buckling of two sections:

$UC_{5-1} = N_{E;d} / (C_{max;buc} \times N_{b;Rd})$ = **n.v.t.** **< 1**

$UC_{5-2} = N_{E;d} / N_{b;Rd} + k_{yy} \times (M_{y;Ed} + DM_{y;Ed}) / (C_{LT} \times M_{y;Rk})$ = **n.v.t.** **< 1**

7 - Check shear stress boltconnection:

$UC_7 = F_{v;Ed} / F_{v;Rd}$ = **0,58** **< 1**

8 - Check bearing stress boltconnection:

$UC_8 = F_{b;Ed} / F_{b;Rd}$ = **0,29** **< 1**

Remarks:

The maximum increase of stress or totalstress is(*2) : **$U.C_{max}$ = 0,59 = 59%**

(*1) Eventually, with the checks of the stresses, the cross-section reduction method is used according to prEN 1993-1-5

(*2) The total stress or increase of stress has been related to the permissible stress

Revision :	0	A	B	C	D	E	F
Date :	13-mrt-2012						
Name :	J Goddijn						
Checked :	J Boogert						

Order :	14509	**Dossier :**	13.039	**Berekening :**
Project :	Omleiding mast 52 tot 54 en noodmast 74, 150 kv-Lijn Leiden-Zoetermeer			
Part :	Mast 55			

Check equal leg angle-members according to Eurocode 3, prEN 1993-1-1 : 2003

File prEN 1993-1-1.revB.xls d.d. 2-32012, JG

Check section: *Vak 6 Horizontale Knikverkorters L50x50x5* *M24*

Memberforces : **(Attention! pressure = "-" and tension ="+")**

Compression:	N_{Sd}	=	*-9,75*	kN	***Combined forces diagonal:***			
Tension:	N_{Sd}	=	*11,67*	kN	$N_{comb1;c;s;d}$ (min. Compr. or tension)	=	*0*	kN
	$F_{perpend.;s;d}$	=	*1,5*	kN	$N_{comb2;c;s;d}$ (max. compression)	=	*0*	kN

Angle profile : *H50/50/5* (*1)

h	=	*50*	mm	I_y	=	*109643*	mm^4
b	=	*50*	mm	$W_{y;el;eff.1}$	=	*3049*	mm^3
t_f	=	*5*	mm	$W_{y;el;eff.2}$	=	*7811*	mm^3
y_s	=	*14,0*	mm	i_y	=	*15,1*	mm
A_{bruto}	=	*480*	mm^2	i_v	=	*9,6*	mm

Material :

Mat. qual. Fe360 / Fe510	=	*Fe360*		Permissible stress $f_{y;d}$	=	*235,0*	N/mm^2

Geometry section and bolts:

$L_{y;cr}$	=	*1250*	mm	No. bolts / end / flange	=	*1*	
$L_{v;cr}$	=	*1250*	mm	Type of bolts M / "	=	*16*	
$L_{tot\ (with\ comb.\ buckling)}$	=	*0*	mm	End distance bolt e1	=	*30*	mm
$a*L_{tot\ (with\ comb.\ buckling)}$	=	*0*	mm	Centre-centre spacing bolt s1	=	*50*	mm
$L_{perpendicular\ force}$	=	*1250*	mm	Edge distance bolt e2	=	*25*	mm
Position perpendicular force	=	*1*	(⌉=1, ⌋=2)	Boltquality 4.6/5.6/8.8/10.9	=	*4,6*	
Column profile?	=	*1*	no=1, yes=2	Rolled screw threads	=	*1*	
Thickness tie plate	=	*5*	mm	Dubble strap joint no=1, yes=2	=	*1*	

Summary checks :

1 - Check tension on member :

$UC_1 = N_{Ed} / N_{t.Rd}$ = **0,25** **< 1**

2 - Check perpendicular force on member :

$UC_2 = M_{Ed} / M_{c.Rd}$ = **0,65** **< 1**

3 - Check of the member slenderness :

$UC_3 = C_{max;buc} / C_{perm}$ = **130** **< 200 or 240**

4 - Check stress in member due to compression without excentricity:

$UC_4 = N_{E;d} / (C_{max;buc} \times N_{b;Rd})$ = **n.v.t.** **< 1**

5 - Check stress in member due to compression with excentricity:

$UC_{5-1} = N_{E;d} / (C_{max;buc} \times N_{b;Rd})$ = **0,22** **< 1**

$UC_{5-2} = N_{E;d} / N_{b;Rd} + k_{yy} \times (M_{y;Ed} + DM_{y;Ed}) / (C_{LT} \times M_{y;Rk})$ = **0,35** **< 1**

6 - Check stress with combined buckling of two sections:

$UC_{5-1} = N_{E;d} / (C_{max;buc} \times N_{b;Rd})$ = **n.v.t.** **< 1**

$UC_{5-2} = N_{E;d} / N_{b;Rd} + k_{yy} \times (M_{y;Ed} + DM_{y;Ed}) / (C_{LT} \times M_{y;Rk})$ = **n.v.t.** **< 1**

7 - Check shear stress boltconnection:

$UC_7 = F_{v;Ed} / F_{v;Rd}$ = **0,39** **< 1**

8 - Check bearing stress boltconnection:

$UC_8 = F_{b;Ed} / F_{b;Rd}$ = **0,42** **< 1**

Remarks:

The maximum increase of stress or totalstress is(*2) : **$U.C_{max}$ = 0,65 = 65%**

(*1) Eventually, with the checks of the stresses, the cross-section reduction method is used according to prEN 1993-1-5

(*2) The total stress or increase of stress has been related to the permissible stress

Revision :	0	A	B	C	D	E	F
Date :	13-mrt-2012						
Name :	J Goddijn						
Checked :	J Boogert						

Order :	14509	**Dossier :** 13.039	**Berekening :**
Project :	Omleiding mast 52 tot 54 en noodmast 74, 150 kv-Lijn Leiden-Zoetermeer		
Part :	Mast 55		

D&C ENGINEERING

Check equal leg angle-members according to Eurocode 3, prEN 1993-1-1 : 2003

File prEN 1993-1-1.revB.xls d.d. 2-32012, JG

Check section: *Vak 6 Horizontale vrband L130x130x12* *M25*

Memberforces : **(Attention! pressure = "-" and tension ="+")**

Compression:	N_{Sd}	=	-114,52	kN	***Combined forces diagonal:***			
Tension:	N_{Sd}	=	74,6	kN	$N_{comb1;c;s;d}$ (min. Compr. or tension)	=	0	kN
	$F_{perpend.;s;d}$	=	1,5	kN	$N_{comb2;c;s;d}$ (max. compression)	=	0	kN

Angle profile : *H130/130/12* (*1)

h	=	130	mm	I_y	=	4721746	mm^4
b	=	130	mm	$W_{y;el;eff.1}$	=	50442	mm^3
t_f	=	12	mm	$W_{y;el;eff.2}$	=	129742	mm^3
y_s	=	36,4	mm	i_y	=	39,7	mm
A_{bruto}	=	2997	mm^2	i_v	=	25,2	mm

Material :

Mat. qual. Fe360 / Fe510	=	Fe360		Permissible stress $f_{y;d}$	=	235,0	N/mm^2

Geometry section and bolts:

$L_{y;cr}$	=	3950	mm	No. bolts / end / flange	=	2	
$L_{v;cr}$	=	3950	mm	Type of bolts M / "	=	24	
L_{tot} (with comb. buckling)	=	0	mm	End distance bolt e1	=	50	mm
$a*L_{tot}$ (with comb. buckling)	=	0	mm	Centre-centre spacing bolt s1	=	130	mm
$L_{perpendicular\ force}$	=	3950	mm	Edge distance bolt e2	=	25	mm
Position perpendicular force	=	1	(⌉=1, ⌋=2)	Boltquality 4.6/5.6/8.8/10.9	=	4,6	
Column profile?	=	1	no=1, yes=2	Rolled screw threads	=	1	
Thickness tie plate	=	12	mm	Dubble strap joint no=1, yes=2	=	1	

Summary checks :

1 - Check tension on member :

$UC_1 = N_{Ed} / N_{t.Rd}$ = **0,14** **< 1**

2 - Check perpendicular force on member :

$UC_2 = M_{Ed} / M_{c.Rd}$ = **0,12** **< 1**

3 - Check of the member slenderness :

$UC_3 = C_{max;buc} / C_{perm}$ = **157** **< 200 or 240**

4 - Check stress in member due to compression without excentricity:

$UC_4 = N_{E;d} / (C_{max;buc} \times N_{b;Rd})$ = **0,48** **< 1**

5 - Check stress in member due to compression with excentricity:

$UC_{5-1} = N_{E;d} / (C_{max;buc} \times N_{b;Rd})$ = **n.v.t.** **< 1**

$UC_{5-2} = N_{E;d} / N_{b;Rd} + k_{yy} \times (M_{y;Ed} + DM_{y;Ed}) / (C_{LT} \times M_{y;Rk})$ = **n.v.t.** **< 1**

6 - Check stress with combined buckling of two sections:

$UC_{5-1} = N_{E;d} / (C_{max;buc} \times N_{b;Rd})$ = **n.v.t.** **< 1**

$UC_{5-2} = N_{E;d} / N_{b;Rd} + k_{yy} \times (M_{y;Ed} + DM_{y;Ed}) / (C_{LT} \times M_{y;Rk})$ = **n.v.t.** **< 1**

7 - Check shear stress boltconnection:

$UC_7 = F_{v;Ed} / F_{v;Rd}$ = **0,84** **< 1**

8 - Check bearing stress boltconnection:

$UC_8 = F_{b;Ed} / F_{b;Rd}$ = **0,71** **< 1**

Remarks:

The maximum increase of stress or totalstress is(*2) : **$U.C_{max}$ = 0,84 = 84%**

(*1) Eventually, with the checks of the stresses, the cross-section reduction method is used according to prEN 1993-1-5

(*2) The total stress or increase of stress has been related to the permissible stress

Revision :	0	A	B	C	D	E	F
Date :	13-mrt-2012						
Name :	J Goddijn						
Checked :	J Boogert						

Order	:	14509	**Dossier :**	13.039	**Berekening :**
Project	:	Omleiding mast 52 tot 54 en noodmast 74, 150 kv-Lijn Leiden-Zoetermeer			
Part	:	Mast 55			

D&C ENGINEERING

Check equal leg angle-members according to Eurocode 3, prEN 1993-1-1 : 2003

File prEN 1993-1-1.revB.xls d.d. 2-32012, JG

Check section: *Vak 6 Vertical Knikverkorters L90x90x9* *M26*

Memberforces : **(Attention! pressure = "-" and tension ="+")**

Compression:	N_{Sd}	=	*-106,31*	kN	***Combined forces diagonal:***			
Tension:	N_{Sd}	=	*66,2*	kN	$N_{comb1;c;s;d}$ (min. Compr. or tension)	=	*0*	kN
	$F_{perpend.;s;d}$	=	*0*	kN	$N_{comb2;c;s;d}$ (max. compression)	=	*0*	kN

Angle profile : *H90/90/9* (*1)

h	=	*90*	mm	I_y	=	*1158332*	mm^4
b	=	*90*	mm	$W_{y;el;eff.1}$	=	*17927*	mm^3
t_f	=	*9*	mm	$W_{y;el;eff.2}$	=	*45626*	mm^3
y_s	=	*25,4*	mm	i_y	=	*27,3*	mm
A_{bruto}	=	*1552*	mm^2	i_v	=	*17,4*	mm

Material :

Mat. qual. Fe360 / Fe510	=	*Fe360*		Permissible stress $f_{y;d}$	=	*235,0*	N/mm^2

Geometry section and bolts:

$L_{y;cr}$	=	*2076*	mm	No. bolts / end / flange	=	*2*	
$L_{v;cr}$	=	*2076*	mm	Type of bolts M / "	=	*24*	
$L_{tot\ (with\ comb.\ buckling)}$	=	*0*	mm	End distance bolt e1	=	*50*	mm
$a*L_{tot\ (with\ comb.\ buckling)}$	=	*0*	mm	Centre-centre spacing bolt s1	=	*90*	mm
$L_{perpendicular\ force}$	=	*0*	mm	Edge distance bolt e2	=	*40*	mm
Position perpendicular force	=	*1*	(⌉=1, ⌋=2)	Boltquality 4.6/5.6/8.8/10.9	=	*4,6*	
Column profile?	=	*1*	no=1, yes=2	Rolled screw threads	=	*1*	
Thickness tie plate	=	*10*	mm	Dubble strap joint no=1, yes=2	=	*1*	

Summary checks :

1 - Check tension on member :

$UC_1 = N_{Ed} / N_{t.Rd}$ = **0,34** **< 1**

2 - Check perpendicular force on member :

$UC_2 = M_{Ed} / M_{c.Rd}$ = **n.v.t.** **< 1**

3 - Check of the member slenderness :

$UC_3 = C_{max;buc} / C_{perm}$ = **119** **< 200 or 240**

4 - Check stress in member due to compression without excentricity:

$UC_4 = N_{E;d} / (C_{max;buc} \times N_{b;Rd})$ = **0,64** **< 1**

5 - Check stress in member due to compression with excentricity:

$UC_{5-1} = N_{E;d} / (C_{max;buc} \times N_{b;Rd})$ = **n.v.t.** **< 1**

$UC_{5-2} = N_{E;d} / N_{b;Rd} + k_{yy} \times (M_{y;Ed} + DM_{y;Ed}) / (C_{LT} \times M_{y;Rk})$ = **n.v.t.** **< 1**

6 - Check stress with combined buckling of two sections:

$UC_{5-1} = N_{E;d} / (C_{max;buc} \times N_{b;Rd})$ = **n.v.t.** **< 1**

$UC_{5-2} = N_{E;d} / N_{b;Rd} + k_{yy} \times (M_{y;Ed} + DM_{y;Ed}) / (C_{LT} \times M_{y;Rk})$ = **n.v.t.** **< 1**

7 - Check shear stress boltconnection:

$UC_7 = F_{v;Ed} / F_{v;Rd}$ = **0,78** **< 1**

8 - Check bearing stress boltconnection:

$UC_8 = F_{b;Ed} / F_{b;Rd}$ = **0,38** **< 1**

Remarks:

The maximum increase of stress or totalstress is(*2) : **$U.C_{max}$ = 0,78 = 78%**

(*1) Eventually, with the checks of the stresses, the cross-section reduction method is used according to prEN 1993-1-5

(*2) The total stress or increase of stress has been related to the permissible stress

Revision :	0	A	B	C	D	E	F
Date :	13-mrt-2012						
Name :	J Goddijn						
Checked :	J Boogert						

Order :	14509	**Dossier :**	13.039	**Berekening :**
Project :	Omleiding mast 52 tot 54 en noodmast 74, 150 kv-Lijn Leiden-Zoetermeer			
Part :	Mast 55			

D&C ENGINEERING

Check equal leg angle-members according to Eurocode 3, prEN 1993-1-1 : 2003

File prEN 1993-1-1.revB.xls d.d. 2-32012, JG

Check section: *Vak 6 Vertical Knikverkorters L50x50x5* *M27*

Memberforces : **(Attention! pressure = "-" and tension ="+")**

Compression:	N_{Sd}	=	*-14,2*	kN	***Combined forces diagonal:***			
Tension:	N_{Sd}	=	*10,49*	kN	$N_{comb1;c;s;d}$ (min. Compr. or tension)	=	*0*	kN
	$F_{perpend.;s;d}$	=	*0*	kN	$N_{comb2;c;s;d}$ (max. compression)	=	*0*	kN

Angle profile : *H50/50/5* (*1)

h	=	*50*	mm	I_y	=	*109643*	mm^4
b	=	*50*	mm	$W_{y;el;eff.1}$	=	*3049*	mm^3
t_f	=	*5*	mm	$W_{y;el;eff.2}$	=	*7811*	mm^3
y_s	=	*14,0*	mm	i_y	=	*15,1*	mm
A_{bruto}	=	*480*	mm^2	i_v	=	*9,6*	mm

Material :

Mat. qual. Fe360 / Fe510	=	*Fe360*		Permissible stress $f_{y;d}$	=	*235,0*	N/mm^2

Geometry section and bolts:

$L_{y;cr}$	=	*2571*	mm	No. bolts / end / flange	=	*2*	
$L_{v;cr}$	=	*2571*	mm	Type of bolts M / "	=	*24*	
$L_{tot\ (with\ comb.\ buckling)}$	=	*0*	mm	End distance bolt e1	=	*50*	mm
$a*L_{tot\ (with\ comb.\ buckling)}$	=	*0*	mm	Centre-centre spacing bolt s1	=	*90*	mm
$L_{perpendicular\ force}$	=	*0*	mm	Edge distance bolt e2	=	*40*	mm
Position perpendicular force	=	*1*	(⌉=1, ⌋=2)	Boltquality 4.6/5.6/8.8/10.9	=	*4,6*	
Column profile?	=	*1*	no=1, yes=2	Rolled screw threads	=	*1*	
Thickness tie plate	=	*10*	mm	Dubble strap joint no=1, yes=2	=	*1*	

Summary checks :

1 - Check tension on member :

$UC_1 = N_{Ed} / N_{t.Rd}$ = **0,20** **< 1**

2 - Check perpendicular force on member :

$UC_2 = M_{Ed} / M_{c.Rd}$ = **n.v.t.** **< 1**

3 - Check of the member slenderness :

$UC_3 = C_{max;buc} / C_{perm}$ = **268** **< 200 or 240**

4 - Check stress in member due to compression without excentricity:

$UC_4 = N_{E;d} / (C_{max;buc} \times N_{b;Rd})$ = **0,80** **< 1**

5 - Check stress in member due to compression with excentricity:

$UC_{5-1} = N_{E;d} / (C_{max;buc} \times N_{b;Rd})$ = **n.v.t.** **< 1**

$UC_{5-2} = N_{E;d} / N_{b;Rd} + k_{yy} \times (M_{y;Ed} + DM_{y;Ed}) / (C_{LT} \times M_{y;Rk})$ = **n.v.t.** **< 1**

6 - Check stress with combined buckling of two sections:

$UC_{5-1} = N_{E;d} / (C_{max;buc} \times N_{b;Rd})$ = **n.v.t.** **< 1**

$UC_{5-2} = N_{E;d} / N_{b;Rd} + k_{yy} \times (M_{y;Ed} + DM_{y;Ed}) / (C_{LT} \times M_{y;Rk})$ = **n.v.t.** **< 1**

7 - Check shear stress boltconnection:

$UC_7 = F_{v;Ed} / F_{v;Rd}$ = **0,10** **< 1**

8 - Check bearing stress boltconnection:

$UC_8 = F_{b;Ed} / F_{b;Rd}$ = **0,09** **< 1**

Remarks:

The maximum increase of stress or totalstress is(*2) : **$U.C_{max}$ = 0,80 = 80%**

(*1) Eventually, with the checks of the stresses, the cross-section reduction method is used according to prEN 1993-1-5

(*2) The total stress or increase of stress has been related to the permissible stress

Revision :	0	A	B	C	D	E	F
Date :	13-mrt-2012						
Name :	J Goddijn						
Checked :	J Boogert						

Order :	14509	**Dossier :**	13.039	**Berekening :**
Project :	Omleiding mast 52 tot 54 en noodmast 74, 150 kv-Lijn Leiden-Zoetermeer			
Part :	Mast 55			

D&C ENGINEERING

Check equal leg angle-members according to Eurocode 3, prEN 1993-1-1 : 2003

File prEN 1993-1-1.revB.xls d.d. 2-32012, JG

Check section: *Vak 6 Verticale verbanden L180x180x16* *M28*

Memberforces : **(Attention! pressure = "-" and tension ="+")**

Compression:	N_{Sd}	=	-322,86	kN	***Combined forces diagonal:***			
Tension:	N_{Sd}	=	301,42	kN	$N_{comb1;c;s;d}$ (min. Compr. or tension)	=	0	kN
	$F_{perpend.;s;d}$	=	0	kN	$N_{comb2;c;s;d}$ (max. compression)	=	0	kN

Angle profile : *H180/180/16* (*1)

h	=	180	mm	I_y	=	16824296	mm^4
b	=	180	mm	$W_{y;el;eff.1}$	=	129653	mm^3
t_f	=	16	mm	$W_{y;el;eff.2}$	=	334903	mm^3
y_s	=	50,2	mm	i_y	=	55,1	mm
A_{bruto}	=	5539	mm^2	i_v	=	35,0	mm

Material :

Mat. qual. Fe360 / Fe510	=	Fe360		Permissible stress $f_{y;d}$	=	235,0	N/mm^2

Geometry section and bolts:

$L_{y;cr}$	=	5642	mm	No. bolts / end / flange	=	5	
$L_{v;cr}$	=	2825	mm	Type of bolts M / "	=	30	
$L_{tot\ (with\ comb.\ buckling)}$	=	0	mm	End distance bolt e1	=	65	mm
$a*L_{tot\ (with\ comb.\ buckling)}$	=	0	mm	Centre-centre spacing bolt s1	=	100	mm
$L_{perpendicular\ force}$	=	0	mm	Edge distance bolt e2	=	50	mm
Position perpendicular force	=	1	(⌉=1, ⌋=2)	Boltquality 4.6/5.6/8.8/10.9	=	4,6	
Column profile?	=	1	no=1, yes=2	Rolled screw threads	=	1	
Thickness tie plate	=	14	mm	Dubble strap joint no=1, yes=2	=	1	

Summary checks :

1 - Check tension on member :

$UC_1 = N_{Ed} / N_{t.Rd}$ = **0,39** **< 1**

2 - Check perpendicular force on member :

$UC_2 = M_{Ed} / M_{c.Rd}$ = **n.v.t.** **< 1**

3 - Check of the member slenderness :

$UC_3 = C_{max;buc} / C_{perm}$ = **102** **< 200 or 240**

4 - Check stress in member due to compression without excentricity:

$UC_4 = N_{E;d} / (C_{max;buc} \times N_{b;Rd})$ = **0,46** **< 1**

5 - Check stress in member due to compression with excentricity:

$UC_{5-1} = N_{E;d} / (C_{max;buc} \times N_{b;Rd})$ = **n.v.t.** **< 1**

$UC_{5-2} = N_{E;d} / N_{b;Rd} + k_{yy} \times (M_{y;Ed} + DM_{y;Ed}) / (C_{LT} \times M_{y;Rk})$ = **n.v.t.** **< 1**

6 - Check stress with combined buckling of two sections:

$UC_{5-1} = N_{E;d} / (C_{max;buc} \times N_{b;Rd})$ = **n.v.t.** **< 1**

$UC_{5-2} = N_{E;d} / N_{b;Rd} + k_{yy} \times (M_{y;Ed} + DM_{y;Ed}) / (C_{LT} \times M_{y;Rk})$ = **n.v.t.** **< 1**

7 - Check shear stress boltconnection:

$UC_7 = F_{v;Ed} / F_{v;Rd}$ = **0,60** **< 1**

8 - Check bearing stress boltconnection:

$UC_8 = F_{b;Ed} / F_{b;Rd}$ = **0,30** **< 1**

Remarks:

The maximum increase of stress or totalstress is(*2) : **$U.C_{max}$ = 0,60 = 60%**

(*1) Eventually, with the checks of the stresses, the cross-section reduction method is used according to prEN 1993-1-5

(*2) The total stress or increase of stress has been related to the permissible stress

Revision :	0	A	B	C	D	E	F
Date :	13-mrt-2012						
Name :	J Goddijn						
Checked :	J Boogert						

Order :	14509	**Dossier :**	13.039	**Berekening :**
Project :	Omleiding mast 52 tot 54 en noodmast 74, 150 kv-Lijn Leiden-Zoetermeer			
Part :	Mast 55			

D&C ENGINEERING

Check equal leg angle-members according to Eurocode 3, prEN 1993-1-1 : 2003

File prEN 1993-1-1.revB.xls d.d. 2-32012, JG

Check section: *Vak 7-8-9-10-13-14 Randen L200x200x16* *M29*

Memberforces : **(Attention! pressure = "-" and tension ="+")**

Compression:	N_{Sd}	=	-633,51	kN	***Combined forces diagonal:***			
Tension:	N_{Sd}	=	385,56	kN	$N_{comb1;c;s;d}$ (min. Compr. or tension)	=	0	kN
	$F_{perpend.;s;d}$	=	0	kN	$N_{comb2;c;s;d}$ (max. compression)	=	0	kN

Angle profile : *H200/200/16* (*1)

h	=	200	mm	I_y	=	35603980	mm^4
b	=	200	mm	$W_{y;el;eff.1}$	=	252744	mm^3
t_f	=	26	mm	$W_{y;el;eff.2}$	=	602125	mm^3
y_s	=	59,1	mm	i_y	=	60,4	mm
A_{bruto}	=	9759	mm^2	i_v	=	38,8	mm

Material :

Mat. qual. Fe360 / Fe510	=	Fe360		Permissible stress $f_{y;d}$	=	235,0	N/mm^2

Geometry section and bolts:

$L_{y;cr}$	=	4261	mm	No. bolts / end / flange	=	3	**(Per flange !)**
$L_{v;cr}$	=	2141	mm	Type of bolts M / "	=	30	
L_{tot} (with comb. buckling)	=	0	mm	End distance bolt e1	=	60	mm
$a*L_{tot}$ (with comb. buckling)	=	0	mm	Centre-centre spacing bolt s1	=	110	mm
$L_{perpendicular\ force}$	=	0	mm	Edge distance bolt e2	=	45	mm
Position perpendicular force	=	1	(⌉=1, ⌋=2)	Boltquality 4.6/5.6/8.8/10.9	=	4,6	
Column profile?	=	2	no=1, yes=2	Rolled screw threads	=	1	
Thickness tie plate	=	16	mm	Dubble strap joint no=1, yes=2	=	1	

Summary checks :

1 - Check tension on member :

$UC_1 = N_{Ed} / N_{t.Rd}$ = **0,18** **< 1**

2 - Check perpendicular force on member :

$UC_2 = M_{Ed} / M_{c.Rd}$ = **n.v.t.** **< 1**

3 - Check of the member slenderness :

$UC_3 = C_{max;buc} / C_{perm}$ = **71** **< 120**

4 - Check stress in member due to compression without excentricity:

$UC_4 = N_{E;d} / (C_{max;buc} \times N_{b;Rd})$ = **0,37** **< 1**

5 - Check stress in member due to compression with excentricity:

$UC_{5-1} = N_{E;d} / (C_{max;buc} \times N_{b;Rd})$ = **n.v.t.** **< 1**

$UC_{5-2} = N_{E;d} / N_{b;Rd} + k_{yy} \times (M_{y;Ed} + DM_{y;Ed}) / (C_{LT} \times M_{y;Rk})$ = **n.v.t.** **< 1**

6 - Check stress with combined buckling of two sections:

$UC_{5-1} = N_{E;d} / (C_{max;buc} \times N_{b;Rd})$ = **n.v.t.** **< 1**

$UC_{5-2} = N_{E;d} / N_{b;Rd} + k_{yy} \times (M_{y;Ed} + DM_{y;Ed}) / (C_{LT} \times M_{y;Rk})$ = **n.v.t.** **< 1**

7 - Check shear stress boltconnection:

$UC_7 = F_{v;Ed} / F_{v;Rd}$ = **0,98** **< 1**

8 - Check bearing stress boltconnection:

$UC_8 = F_{b;Ed} / F_{b;Rd}$ = **0,42** **< 1**

Remarks:

The maximum increase of stress or totalstress is(*2) : **$U.C_{max}$ = 0,98 = 98%**

(*1) Eventually, with the checks of the stresses, the cross-section reduction method is used according to prEN 1993-1-5

(*2) The total stress or increase of stress has been related to the permissible stress

Revision :	0	A	B	C	D	E	F
Date :	13-mrt-2012						
Name :	J Goddijn						
Checked :	J Boogert						

Order :	14509	**Dossier :**	13.039	**Berekening :**
Project :	Omleiding mast 52 tot 54 en noodmast 74, 150 kv-Lijn Leiden-Zoetermeer			
Part :	Mast 55			

D&C ENGINEERING

Check equal leg angle-members according to Eurocode 3, prEN 1993-1-1 : 2003

File prEN 1993-1-1.revB.xls d.d. 2-32012, JG

Check section: *Vak 7-8-9-10-13-14 Horizontale Knikverkorters L50x50x5* *M30*

Memberforces : **(Attention! pressure = "-" and tension ="+")**

Compression:	N_{Sd}	=	-10,02	kN	***Combined forces diagonal:***			
Tension:	N_{Sd}	=	10,02	kN	$N_{comb1;c;s;d}$ (min. Compr. or tension)	=	0	kN
	$F_{perpend.;s;d}$	=	1,5	kN	$N_{comb2;c;s;d}$ (max. compression)	=	0	kN

Angle profile : *H50/50/5* (*1)

h	=	50	mm	I_y	=	109643	mm^4
b	=	50	mm	$W_{y;el;eff.1}$	=	3049	mm^3
t_f	=	5	mm	$W_{y;el;eff.2}$	=	7811	mm^3
y_s	=	14,0	mm	i_y	=	15,1	mm
A_{bruto}	=	480	mm^2	i_v	=	9,6	mm

Material :

Mat. qual. Fe360 / Fe510	=	Fe360		Permissible stress $f_{y;d}$	=	235,0	N/mm^2

Geometry section and bolts:

$L_{y;cr}$	=	880	mm	No. bolts / end / flange	=	1	
$L_{v;cr}$	=	880	mm	Type of bolts M / "	=	16	
$L_{tot\ (with\ comb.\ buckling)}$	=	0	mm	End distance bolt e1	=	30	mm
$a*L_{tot\ (with\ comb.\ buckling)}$	=	0	mm	Centre-centre spacing bolt s1	=	50	mm
$L_{perpendicular\ force}$	=	880	mm	Edge distance bolt e2	=	25	mm
Position perpendicular force	=	1	(⌉=1, ⌋=2)	Boltquality 4.6/5.6/8.8/10.9	=	4,6	
Column profile?	=	1	no=1, yes=2	Rolled screw threads	=	1	
Thickness tie plate	=	5	mm	Dubble strap joint no=1, yes=2	=	1	

Summary checks :

1 - Check tension on member :

$UC_1 = N_{Ed} / N_{t.Rd}$ = **0,22** **< 1**

2 - Check perpendicular force on member :

$UC_2 = M_{Ed} / M_{c.Rd}$ = **0,46** **< 1**

3 - Check of the member slenderness :

$UC_3 = C_{max;buc} / C_{perm}$ = **92** **< 200 or 240**

4 - Check stress in member due to compression without excentricity:

$UC_4 = N_{E;d} / (C_{max;buc} \times N_{b;Rd})$ = **n.v.t.** **< 1**

5 - Check stress in member due to compression with excentricity:

$UC_{5-1} = N_{E;d} / (C_{max;buc} \times N_{b;Rd})$ = **0,14** **< 1**

$UC_{5-2} = N_{E;d} / N_{b;Rd} + k_{yy} \times (M_{y;Ed} + DM_{y;Ed}) / (C_{LT} \times M_{y;Rk})$ = **0,27** **< 1**

6 - Check stress with combined buckling of two sections:

$UC_{5-1} = N_{E;d} / (C_{max;buc} \times N_{b;Rd})$ = **n.v.t.** **< 1**

$UC_{5-2} = N_{E;d} / N_{b;Rd} + k_{yy} \times (M_{y;Ed} + DM_{y;Ed}) / (C_{LT} \times M_{y;Rk})$ = **n.v.t.** **< 1**

7 - Check shear stress boltconnection:

$UC_7 = F_{v;Ed} / F_{v;Rd}$ = **0,33** **< 1**

8 - Check bearing stress boltconnection:

$UC_8 = F_{b;Ed} / F_{b;Rd}$ = **0,36** **< 1**

Remarks:

The maximum increase of stress or totalstress is(*2) : **$U.C_{max}$ = 0,46 = 46%**

(*1) Eventually, with the checks of the stresses, the cross-section reduction method is used according to prEN 1993-1-5

(*2) The total stress or increase of stress has been related to the permissible stress

Revision :	0	A	B	C	D	E	F
Date :	13-mrt-2012						
Name :	J Goddijn						
Checked :	J Boogert						

Order :	14509	**Dossier :**	13.039	**Berekening :**
Project :	Omleiding mast 52 tot 54 en noodmast 74, 150 kv-Lijn Leiden-Zoetermeer			
Part :	Mast 55			

Check equal leg angle-members according to Eurocode 3, prEN 1993-1-1 : 2003

File prEN 1993-1-1.revB.xls d.d. 2-32012, JG

Check section: *Vak 7-8-9-10-13-14 Verticale Knikverkorters L50x50x5* *M31*

Memberforces : **(Attention! pressure = "-" and tension ="+")**

Compression:	N_{Sd}	=	*-17,33*	kN	*Combined forces diagonal:*			
Tension:	N_{Sd}	=	*16,47*	kN	$N_{comb1;c;s;d}$ (min. Compr. or tension)	=	*0*	kN
	$F_{perpend.;s;d}$	=	*0*	kN	$N_{comb2;c;s;d}$ (max. compression)	=	*0*	kN

Angle profile : *H50/50/5* (*1)

h	=	*50*	mm	I_y	=	*109643*	mm^4
b	=	*50*	mm	$W_{y;el;eff.1}$	=	*3049*	mm^3
t_f	=	*5*	mm	$W_{y;el;eff.2}$	=	*7811*	mm^3
y_s	=	*14,0*	mm	i_y	=	*15,1*	mm
A_{bruto}	=	*480*	mm^2	i_v	=	*9,6*	mm

Material :

Mat. qual. Fe360 / Fe510	=	*Fe360*		Permissible stress $f_{y;d}$	=	*235,0*	N/mm^2

Geometry section and bolts:

$L_{y;cr}$	=	*2050*	mm	No. bolts / end / flange	=	*1*	
$L_{v;cr}$	=	*2050*	mm	Type of bolts M / "	=	*16*	
$L_{tot\ (with\ comb.\ buckling)}$	=	*0*	mm	End distance bolt e1	=	*30*	mm
$a*L_{tot\ (with\ comb.\ buckling)}$	=	*0*	mm	Centre-centre spacing bolt s1	=	*50*	mm
$L_{perpendicular\ force}$	=	*0*	mm	Edge distance bolt e2	=	*25*	mm
Position perpendicular force	=	*1*	(⌉=1, ⌋=2)	Boltquality 4.6/5.6/8.8/10.9	=	*4,6*	
Column profile?	=	*1*	no=1, yes=2	Rolled screw threads	=	*1*	
Thickness tie plate	=	*5*	mm	Dubble strap joint no=1, yes=2	=	*1*	

Summary checks :

1 - Check tension on member :

$UC_1 = N_{Ed} / N_{t.Rd}$ = **0,36** **< 1**

2 - Check perpendicular force on member :

$UC_2 = M_{Ed} / M_{c.Rd}$ = **n.v.t.** **< 1**

3 - Check of the member slenderness :

$UC_3 = C_{max;buc} / C_{perm}$ = **213** **< 200 or 240**

4 - Check stress in member due to compression without excentricity:

$UC_4 = N_{E;d} / (C_{max;buc} \times N_{b;Rd})$ = **n.v.t.** **< 1**

5 - Check stress in member due to compression with excentricity:

$UC_{5-1} = N_{E;d} / (C_{max;buc} \times N_{b;Rd})$ = **0,92** **< 1**

$UC_{5-2} = N_{E;d} / N_{b;Rd} + k_{yy} \times (M_{y;Ed} + DM_{y;Ed}) / (C_{LT} \times M_{y;Rk})$ = **1,16** **> 1 !!**

6 - Check stress with combined buckling of two sections:

$UC_{5-1} = N_{E;d} / (C_{max;buc} \times N_{b;Rd})$ = **n.v.t.** **< 1**

$UC_{5-2} = N_{E;d} / N_{b;Rd} + k_{yy} \times (M_{y;Ed} + DM_{y;Ed}) / (C_{LT} \times M_{y;Rk})$ = **n.v.t.** **< 1**

7 - Check shear stress boltconnection:

$UC_7 = F_{v;Ed} / F_{v;Rd}$ = **0,57** **< 1**

8 - Check bearing stress boltconnection:

$UC_8 = F_{b;Ed} / F_{b;Rd}$ = **0,59** **< 1**

Remarks:

The maximum increase of stress or totalstress is(*2) : **$U.C_{max}$ = 1,16 = 116%**

(*1) Eventually, with the checks of the stresses, the cross-section reduction method is used according to prEN 1993-1-5

(*2) The total stress or increase of stress has been related to the permissible stress

Revision :	0	A	B	C	D	E	F
Date :	13-mrt-2012						
Name :	J Goddijn						
Checked :	J Boogert						

Order :	14509	**Dossier :**	13.039	**Berekening :**
Project :	Omleiding mast 52 tot 54 en noodmast 74, 150 kv-Lijn Leiden-Zoetermeer			
Part :	Mast 55			

D&C ENGINEERING

Check equal leg angle-members according to Eurocode 3, prEN 1993-1-1 : 2003

File prEN 1993-1-1.revB.xls d.d. 2-32012, JG

Check section: *Vak 7-8-9-10-13-14 Verticale verbanden L150x100x12* *M32*

Memberforces : **(Attention! pressure = "-" and tension ="+")**

Compression:	N_{Sd}	=	*-249,08*	kN	***Combined forces diagonal:***			
Tension:	N_{Sd}	=	*292,52*	kN	$N_{comb1;c;s;d}$ (min. Compr. or tension)	=	*0*	kN
	$F_{perpend.;s;d}$	=	*0*	kN	$N_{comb2;c;s;d}$ (max. compression)	=	*0*	kN

Angle profile : *H150/100/12* (*1)

h	=	*150*	mm	I_y	=	*6496055*	mm^4
b	=	*100*	mm	$W_{y;el;eff.1}$	=	*51628*	mm^3
t_f	=	*12*	mm	$W_{y;el;eff.2}$	=	*268690*	mm^3
y_s	=	*24,2*	mm	i_y	=	*47,5*	mm
A_{bruto}	=	*2874*	mm^2	i_v	=	*21,5*	mm

Material :

Mat. qual. Fe360 / Fe510	=	*Fe360*		Permissible stress $f_{y;d}$	=	*235,0*	N/mm^2

Geometry section and bolts:

$L_{y;cr}$	=	*4017*	mm	No. bolts / end / flange		=	*4*	
$L_{v;cr}$	=	*2019*	mm	Type of bolts	M / "	=	*30*	
$L_{tot\ (with\ comb.\ buckling)}$	=	*0*	mm	End distance bolt	e1	=	*60*	mm
$a*L_{tot\ (with\ comb.\ buckling)}$	=	*0*	mm	Centre-centre spacing bolt	s1	=	*90*	mm
$L_{perpendicular\ force}$	=	*0*	mm	Edge distance bolt	e2	=	*45*	mm
Position perpendicular force	=	*1*	(⌉=1, ⌋=2)	Boltquality	4.6/5.6/8.8/10.9	=	*4,6*	
Column profile?	=	*1*	no=1, yes=2	Rolled screw threads		=	*1*	
Thickness tie plate	=	*12*	mm	Dubble strap joint no=1, yes=2		=	*1*	

Summary checks :

1 - Check tension on member :

$UC_1 = N_{Ed} / N_{t.Rd}$ = **0,79** **< 1**

2 - Check perpendicular force on member :

$UC_2 = M_{Ed} / M_{c.Rd}$ = **n.v.t.** **< 1**

3 - Check of the member slenderness :

$UC_3 = C_{max;buc} / C_{perm}$ = **94** **< 200 or 240**

4 - Check stress in member due to compression without excentricity:

$UC_4 = N_{E;d} / (C_{max;buc} \times N_{b;Rd})$ = **0,62** **< 1**

5 - Check stress in member due to compression with excentricity:

$UC_{5-1} = N_{E;d} / (C_{max;buc} \times N_{b;Rd})$ = **n.v.t.** **< 1**

$UC_{5-2} = N_{E;d} / N_{b;Rd} + k_{yy} \times (M_{y;Ed} + DM_{y;Ed}) / (C_{LT} \times M_{y;Rk})$ = **n.v.t.** **< 1**

6 - Check stress with combined buckling of two sections:

$UC_{5-1} = N_{E;d} / (C_{max;buc} \times N_{b;Rd})$ = **n.v.t.** **< 1**

$UC_{5-2} = N_{E;d} / N_{b;Rd} + k_{yy} \times (M_{y;Ed} + DM_{y;Ed}) / (C_{LT} \times M_{y;Rk})$ = **n.v.t.** **< 1**

7 - Check shear stress boltconnection:

$UC_7 = F_{v;Ed} / F_{v;Rd}$ = **0,68** **< 1**

8 - Check bearing stress boltconnection:

$UC_8 = F_{b;Ed} / F_{b;Rd}$ = **0,55** **< 1**

Remarks:

The maximum increase of stress or totalstress is(*2) : **$U.C_{max}$ = 0,79 = 79%**

(*1) Eventually, with the checks of the stresses, the cross-section reduction method is used according to prEN 1993-1-5

(*2) The total stress or increase of stress has been related to the permissible stress

Revision :	0	A	B	C	D	E	F
Date :	13-mrt-2012						
Name :	J Goddijn						
Checked :	J Boogert						

Order :	14509	**Dossier :**	13.039	**Berekening :**
Project :	Omleiding mast 52 tot 54 en noodmast 74, 150 kv-Lijn Leiden-Zoetermeer			
Part :	Mast 55			

D&C ENGINEERING

Check equal leg angle-members according to Eurocode 3, prEN 1993-1-1 : 2003

File prEN 1993-1-1.revB.xls d.d. 2-32012, JG

Check section: *Vak 7-8-9-10-13-14 Verticale verbanden L200x100x14* *M33*

Memberforces : **(Attention! pressure = "-" and tension ="+")**

Compression:	N_{Sd}	=	-283,32	kN	***Combined forces diagonal:***			
Tension:	N_{Sd}	=	272,81	kN	$N_{comb1;c;s;d}$ (min. Compr. or tension)	=	0	kN
	$F_{perpend.;s;d}$	=	0	kN	$N_{comb2;c;s;d}$ (max. compression)	=	0	kN

Angle profile : *H200/100/14* (*1)

h	=	200	mm	I_y	=	16541310	mm^4
b	=	100	mm	$W_{y;el;eff.1}$	=	92814	mm^3
t_f	=	14	mm	$W_{y;el;eff.2}$	=	759497	mm^3
y_s	=	21,8	mm	i_y	=	64,1	mm
A_{bruto}	=	4028	mm^2	i_v	=	21,2	mm

Material :

Mat. qual. Fe360 / Fe510	=	Fe360		Permissible stress $f_{y;d}$	=	235,0	N/mm^2

Geometry section and bolts:

$L_{y;cr}$	=	4747	mm	No. bolts / end / flange	=	5	
$L_{v;cr}$	=	2380	mm	Type of bolts M / "	=	24	
$L_{tot\ (with\ comb.\ buckling)}$	=	0	mm	End distance bolt e1	=	50	mm
$a*L_{tot\ (with\ comb.\ buckling)}$	=	0	mm	Centre-centre spacing bolt s1	=	90	mm
$L_{perpendicular\ force}$	=	0	mm	Edge distance bolt e2	=	45	mm
Position perpendicular force	=	1	(⌉=1, ⌋=2)	Boltquality 4.6/5.6/8.8/10.9	=	4,6	
Column profile?	=	1	no=1, yes=2	Rolled screw threads	=	1	
Thickness tie plate	=	14	mm	Dubble strap joint no=1, yes=2	=	1	

Summary checks :

1 - Check tension on member :

$UC_1 = N_{Ed} / N_{t.Rd}$ = **0,45** **< 1**

2 - Check perpendicular force on member :

$UC_2 = M_{Ed} / M_{c.Rd}$ = **n.v.t.** **< 1**

3 - Check of the member slenderness :

$UC_3 = C_{max;buc} / C_{perm}$ = **112** **< 200 or 240**

4 - Check stress in member due to compression without excentricity:

$UC_4 = N_{E;d} / (C_{max;buc} \times N_{b;Rd})$ = **0,62** **< 1**

5 - Check stress in member due to compression with excentricity:

$UC_{5-1} = N_{E;d} / (C_{max;buc} \times N_{b;Rd})$ = **n.v.t.** **< 1**

$UC_{5-2} = N_{E;d} / N_{b;Rd} + k_{yy} \times (M_{y;Ed} + DM_{y;Ed}) / (C_{LT} \times M_{y;Rk})$ = **n.v.t.** **< 1**

6 - Check stress with combined buckling of two sections:

$UC_{5-1} = N_{E;d} / (C_{max;buc} \times N_{b;Rd})$ = **n.v.t.** **< 1**

$UC_{5-2} = N_{E;d} / N_{b;Rd} + k_{yy} \times (M_{y;Ed} + DM_{y;Ed}) / (C_{LT} \times M_{y;Rk})$ = **n.v.t.** **< 1**

7 - Check shear stress boltconnection:

$UC_7 = F_{v;Ed} / F_{v;Rd}$ = **0,84** **< 1**

8 - Check bearing stress boltconnection:

$UC_8 = F_{b;Ed} / F_{b;Rd}$ = **0,35** **< 1**

Remarks:

The maximum increase of stress or totalstress is(*2) : **$U.C_{max}$ = 0,84 = 84%**

(*1) Eventually, with the checks of the stresses, the cross-section reduction method is used according to prEN 1993-1-5

(*2) The total stress or increase of stress has been related to the permissible stress

Revision :	0	A	B	C	D	E	F
Date :	13-mrt-2012						
Name :	J Goddijn						
Checked :	J Boogert						

Order :	14509	**Dossier :**	13.039	**Berekening :**
Project :	Omleiding mast 52 tot 54 en noodmast 74, 150 kv-Lijn Leiden-Zoetermeer			
Part :	Mast 55			

D&C ENGINEERING

Check equal leg angle-members according to Eurocode 3, prEN 1993-1-1 : 2003

File prEN 1993-1-1.revB.xls d.d. 2-32012, JG

Check section: *Vak 7-8-9-10-13-14 Verticale verbanden L130x130x12* *M34*

Memberforces : **(Attention! pressure = "-" and tension ="+")**

Compression:	N_{Sd}	=	*-197,64*	kN	***Combined forces diagonal:***			
Tension:	N_{Sd}	=	*284,93*	kN	$N_{comb1;c;s;d}$ (min. Compr. or tension)	=	*0*	kN
	$F_{perpend.;s;d}$	=	*0*	kN	$N_{comb2;c;s;d}$ (max. compression)	=	*0*	kN

Angle profile : *H130/130/12* (*1)

h	=	*130*	mm	I_y	=	*4721746*	mm^4
b	=	*130*	mm	$W_{y;el;eff.1}$	=	*50442*	mm^3
t_f	=	*12*	mm	$W_{y;el;eff.2}$	=	*129742*	mm^3
y_s	=	*36,4*	mm	i_y	=	*39,7*	mm
A_{bruto}	=	*2997*	mm^2	i_v	=	*25,2*	mm

Material :

Mat. qual. Fe360 / Fe510	=	*Fe360*		Permissible stress $f_{y;d}$	=	*235,0*	N/mm^2

Geometry section and bolts:

$L_{y;cr}$	=	*4236*	mm	No. bolts / end / flange		=	*3*	
$L_{v;cr}$	=	*2206*	mm	Type of bolts	M / "	=	*30*	
$L_{tot\ (with\ comb.\ buckling)}$	=	*0*	mm	End distance bolt	e1	=	*50*	mm
$a*L_{tot\ (with\ comb.\ buckling)}$	=	*0*	mm	Centre-centre spacing bolt	s1	=	*90*	mm
$L_{perpendicular\ force}$	=	*0*	mm	Edge distance bolt	e2	=	*45*	mm
Position perpendicular force	=	*1*	(⌉=1, ⌋=2)	Boltquality	4.6/5.6/8.8/10.9	=	*4,6*	
Column profile?	=	*1*	no=1, yes=2	Rolled screw threads		=	*1*	
Thickness tie plate	=	*12*	mm	Dubble strap joint no=1, yes=2		=	*1*	

Summary checks :

1 - Check tension on member :

$UC_1 = N_{Ed} / N_{t.Rd}$ = **0,73** **< 1**

2 - Check perpendicular force on member :

$UC_2 = M_{Ed} / M_{c.Rd}$ = **n.v.t.** **< 1**

3 - Check of the member slenderness :

$UC_3 = C_{max;buc} / C_{perm}$ = **107** **< 200 or 240**

4 - Check stress in member due to compression without excentricity:

$UC_4 = N_{E;d} / (C_{max;buc} \times N_{b;Rd})$ = **0,55** **< 1**

5 - Check stress in member due to compression with excentricity:

$UC_{5-1} = N_{E;d} / (C_{max;buc} \times N_{b;Rd})$ = **n.v.t.** **< 1**

$UC_{5-2} = N_{E;d} / N_{b;Rd} + k_{yy} \times (M_{y;Ed} + DM_{y;Ed}) / (C_{LT} \times M_{y;Rk})$ = **n.v.t.** **< 1**

6 - Check stress with combined buckling of two sections:

$UC_{5-1} = N_{E;d} / (C_{max;buc} \times N_{b;Rd})$ = **n.v.t.** **< 1**

$UC_{5-2} = N_{E;d} / N_{b;Rd} + k_{yy} \times (M_{y;Ed} + DM_{y;Ed}) / (C_{LT} \times M_{y;Rk})$ = **n.v.t.** **< 1**

7 - Check shear stress boltconnection:

$UC_7 = F_{v;Ed} / F_{v;Rd}$ = **0,88** **< 1**

8 - Check bearing stress boltconnection:

$UC_8 = F_{b;Ed} / F_{b;Rd}$ = **0,86** **< 1**

Remarks:

The maximum increase of stress or totalstress is(*2) : **$U.C_{max}$ = 0,88 = 88%**

(*1) Eventually, with the checks of the stresses, the cross-section reduction method is used according to prEN 1993-1-5

(*2) The total stress or increase of stress has been related to the permissible stress

Revision :	0	A	B	C	D	E	F
Date :	13-mrt-2012						
Name :	J Goddijn						
Checked :	J Boogert						

Order :	14509	**Dossier :**	13.039	**Berekening :**
Project :	Omleiding mast 52 tot 54 en noodmast 74, 150 kv-Lijn Leiden-Zoetermeer			
Part :	Mast 55			

D&C ENGINEERING

Check equal leg angle-members according to Eurocode 3, prEN 1993-1-1 : 2003

File prEN 1993-1-1.revB.xls d.d. 2-32012, JG

Check section: *Vak 7-8-9-10-13-14 Verticale verbanden L90x90x9* *M35*

Memberforces : **(Attention! pressure = "-" and tension ="+")**

Compression:	N_{Sd}	=	*-70,81*	kN	***Combined forces diagonal:***			
Tension:	N_{Sd}	=	*76,54*	kN	$N_{comb1;c;s;d}$ (min. Compr. or tension)	=	*0*	kN
	$F_{perpend.;s;d}$	=	*0*	kN	$N_{comb2;c;s;d}$ (max. compression)	=	*0*	kN

Angle profile : *H90/90/9* (*1)

h	=	*90*	mm	I_y	=	*1158332*	mm^4
b	=	*90*	mm	$W_{y;el;eff.1}$	=	*17927*	mm^3
t_f	=	*9*	mm	$W_{y;el;eff.2}$	=	*45626*	mm^3
y_s	=	*25,4*	mm	i_y	=	*27,3*	mm
A_{bruto}	=	*1552*	mm^2	i_v	=	*17,4*	mm

Material :

Mat. qual. Fe360 / Fe510	=	*Fe360*		Permissible stress $f_{y;d}$	=	*235,0*	N/mm^2

Geometry section and bolts:

$L_{y;cr}$	=	*4621*	mm	No. bolts / end / flange	=	*2*	
$L_{v;cr}$	=	*2366*	mm	Type of bolts M / "	=	*20*	
$L_{tot\ (with\ comb.\ buckling)}$	=	*0*	mm	End distance bolt e1	=	*50*	mm
$a*L_{tot\ (with\ comb.\ buckling)}$	=	*0*	mm	Centre-centre spacing bolt s1	=	*90*	mm
$L_{perpendicular\ force}$	=	*0*	mm	Edge distance bolt e2	=	*40*	mm
Position perpendicular force	=	*1*	(⌉=1, ⌋=2)	Boltquality 4.6/5.6/8.8/10.9	=	*4,6*	
Column profile?	=	*1*	no=1, yes=2	Rolled screw threads	=	*1*	
Thickness tie plate	=	*10*	mm	Dubble strap joint no=1, yes=2	=	*1*	

Summary checks :

1 - Check tension on member :

$UC_1 = N_{Ed} / N_{t.Rd}$ = **0,33** **< 1**

2 - Check perpendicular force on member :

$UC_2 = M_{Ed} / M_{c.Rd}$ = **n.v.t.** **< 1**

3 - Check of the member slenderness :

$UC_3 = C_{max;buc} / C_{perm}$ = **169** **< 200 or 240**

4 - Check stress in member due to compression without excentricity:

$UC_4 = N_{E;d} / (C_{max;buc} \times N_{b;Rd})$ = **0,74** **< 1**

5 - Check stress in member due to compression with excentricity:

$UC_{5-1} = N_{E;d} / (C_{max;buc} \times N_{b;Rd})$ = **n.v.t.** **< 1**

$UC_{5-2} = N_{E;d} / N_{b;Rd} + k_{yy} \times (M_{y;Ed} + DM_{y;Ed}) / (C_{LT} \times M_{y;Rk})$ = **n.v.t.** **< 1**

6 - Check stress with combined buckling of two sections:

$UC_{5-1} = N_{E;d} / (C_{max;buc} \times N_{b;Rd})$ = **n.v.t.** **< 1**

$UC_{5-2} = N_{E;d} / N_{b;Rd} + k_{yy} \times (M_{y;Ed} + DM_{y;Ed}) / (C_{LT} \times M_{y;Rk})$ = **n.v.t.** **< 1**

7 - Check shear stress boltconnection:

$UC_7 = F_{v;Ed} / F_{v;Rd}$ = **0,81** **< 1**

8 - Check bearing stress boltconnection:

$UC_8 = F_{b;Ed} / F_{b;Rd}$ = **0,39** **< 1**

Remarks:

The maximum increase of stress or totalstress is(*2) : **$U.C_{max}$ = 0,81 = 81%**

(*1) Eventually, with the checks of the stresses, the cross-section reduction method is used according to prEN 1993-1-5

(*2) The total stress or increase of stress has been related to the permissible stress

Revision :	0	A	B	C	D	E	F
Date :	13-mrt-2012						
Name :	J Goddijn						
Checked :	J Boogert						

Order :	14509	**Dossier :**	13.039	**Berekening :**
Project :	Omleiding mast 52 tot 54 en noodmast 74, 150 kv-Lijn Leiden-Zoetermeer			
Part :	Mast 55			

D&C ENGINEERING

Check equal leg angle-members according to Eurocode 3, prEN 1993-1-1 : 2003

File prEN 1993-1-1.revB.xls d.d. 2-32012, JG

Check section: *Vak 7-8-9-10-13-14 Boven randen L160x160x15* *M36*

Memberforces : **(Attention! pressure = "-" and tension ="+")**

Compression:	N_{Sd}	=	*-214,88*	kN	***Combined forces diagonal:***			
Tension:	N_{Sd}	=	*346,36*	kN	$N_{comb1;c;s;d}$ (min. Compr. or tension)	=	*0*	kN
	$F_{perpend.;s;d}$	=	*0*	kN	$N_{comb2;c;s;d}$ (max. compression)	=	*0*	kN

Angle profile : *H160/160/15* (*1)

h	=	*160*	mm	I_y	=	*10988350*	mm^4
b	=	*160*	mm	$W_{y;el;eff.1}$	=	*95470*	mm^3
t_f	=	*15*	mm	$W_{y;el;eff.2}$	=	*244713*	mm^3
y_s	=	*44,9*	mm	i_y	=	*48,8*	mm
A_{bruto}	=	*4606*	mm^2	i_v	=	*31,1*	mm

Material :

Mat. qual. Fe360 / Fe510	=	*Fe360*		Permissible stress $f_{y;d}$	=	*235,0*	N/mm^2

Geometry section and bolts:

$L_{y;cr}$	=	*3680*	mm	No. bolts / end / flange	=	*4*	
$L_{v;cr}$	=	*3680*	mm	Type of bolts M / "	=	*30*	
$L_{tot\ (with\ comb.\ buckling)}$	=	*0*	mm	End distance bolt e1	=	*50*	mm
$a*L_{tot\ (with\ comb.\ buckling)}$	=	*0*	mm	Centre-centre spacing bolt s1	=	*80*	mm
$L_{perpendicular\ force}$	=	*0*	mm	Edge distance bolt e2	=	*45*	mm
Position perpendicular force	=	*1*	(⌉=1, ⌋=2)	Boltquality 4.6/5.6/8.8/10.9	=	*4,6*	
Column profile?	=	*1*	no=1, yes=2	Rolled screw threads	=	*1*	
Thickness tie plate	=	*12*	mm	Dubble strap joint no=1, yes=2	=	*1*	

Summary checks :

1 - Check tension on member :

$UC_1 = N_{Ed} / N_{t.Rd}$ = **0,59** **< 1**

2 - Check perpendicular force on member :

$UC_2 = M_{Ed} / M_{c.Rd}$ = **n.v.t.** **< 1**

3 - Check of the member slenderness :

$UC_3 = C_{max;buc} / C_{perm}$ = **119** **< 200 or 240**

4 - Check stress in member due to compression without excentricity:

$UC_4 = N_{E;d} / (C_{max;buc} \times N_{b;Rd})$ = **0,43** **< 1**

5 - Check stress in member due to compression with excentricity:

$UC_{5-1} = N_{E;d} / (C_{max;buc} \times N_{b;Rd})$ = **n.v.t.** **< 1**

$UC_{5-2} = N_{E;d} / N_{b;Rd} + k_{yy} \times (M_{y;Ed} + DM_{y;Ed}) / (C_{LT} \times M_{y;Rk})$ = **n.v.t.** **< 1**

6 - Check stress with combined buckling of two sections:

$UC_{5-1} = N_{E;d} / (C_{max;buc} \times N_{b;Rd})$ = **n.v.t.** **< 1**

$UC_{5-2} = N_{E;d} / N_{b;Rd} + k_{yy} \times (M_{y;Ed} + DM_{y;Ed}) / (C_{LT} \times M_{y;Rk})$ = **n.v.t.** **< 1**

7 - Check shear stress boltconnection:

$UC_7 = F_{v;Ed} / F_{v;Rd}$ = **0,80** **< 1**

8 - Check bearing stress boltconnection:

$UC_8 = F_{b;Ed} / F_{b;Rd}$ = **0,98** **< 1**

Remarks:

The maximum increase of stress or totalstress is(*2) : **$U.C_{max}$ = 0,98 = 98%**

(*1) Eventually, with the checks of the stresses, the cross-section reduction method is used according to prEN 1993-1-5

(*2) The total stress or increase of stress has been related to the permissible stress

Revision :	0	A	B	C	D	E	F
Date :	13-mrt-2012						
Name :	J Goddijn						
Checked :	J Boogert						

Order :	14509	**Dossier :**	13.039	**Berekening :**
Project :	Omleiding mast 52 tot 54 en noodmast 74, 150 kv-Lijn Leiden-Zoetermeer			
Part :	Mast 55			

Check equal leg angle-members according to Eurocode 3, prEN 1993-1-1 : 2003

File prEN 1993-1-1.revB.xls d.d. 2-32012, JG

Check section: *Vak 7-8-9-10-13-14 Horizontale verbanden L60x60x6* *M37*

Memberforces : **(Attention! pressure = "-" and tension ="+")**

Compression:	N_{Sd}	=	-24,72	kN	*Combined forces diagonal:*			
Tension:	N_{Sd}	=	24,72	kN	$N_{comb1;c;s;d}$ (min. Compr. or tension)	=	0	kN
	$F_{perpend.;s;d}$	=	0	kN	$N_{comb2;c;s;d}$ (max. compression)	=	0	kN

Angle profile : H60/60/6 (*1)

h	=	60	mm	I_y	=	227925	mm^4
b	=	60	mm	$W_{y;el;eff.1}$	=	5285	mm^3
t_f	=	6	mm	$W_{y;el;eff.2}$	=	13507	mm^3
y_s	=	16,9	mm	i_y	=	18,2	mm
A_{bruto}	=	691	mm^2	i_v	=	11,5	mm

Material :

Mat. qual. Fe360 / Fe510	=	Fe360		Permissible stress $f_{y;d}$	=	235,0	N/mm^2

Geometry section and bolts:

$L_{y;cr}$	=	3232	mm	No. bolts / end / flange	=	1	
$L_{v;cr}$	=	1616	mm	Type of bolts M / "	=	16	
L_{tot} (with comb. buckling)	=	0	mm	End distance bolt e1	=	30	mm
$a*L_{tot}$ (with comb. buckling)	=	0	mm	Centre-centre spacing bolt s1	=	50	mm
$L_{perpendicular\ force}$	=	0	mm	Edge distance bolt e2	=	30	mm
Position perpendicular force	=	1	(⌉=1, ⌋=2)	Boltquality 4.6/5.6/8.8/10.9	=	4,6	
Column profile?	=	1	no=1, yes=2	Rolled screw threads	=	1	
Thickness tie plate	=	10	mm	Dubble strap joint no=1, yes=2	=	1	

Summary checks :

1 - Check tension on member :

$UC_1 = N_{Ed} / N_{t.Rd}$ = **0,34** **< 1**

2 - Check perpendicular force on member :

$UC_2 = M_{Ed} / M_{c.Rd}$ = **n.v.t.** **< 1**

3 - Check of the member slenderness :

$UC_3 = C_{max;buc} / C_{perm}$ = **178** **< 200 or 240**

4 - Check stress in member due to compression without excentricity:

$UC_4 = N_{E;d} / (C_{max;buc} \times N_{b;Rd})$ = **n.v.t.** **< 1**

5 - Check stress in member due to compression with excentricity:

$UC_{5-1} = N_{E;d} / (C_{max;buc} \times N_{b;Rd})$ = **0,66** **< 1**

$UC_{5-2} = N_{E;d} / N_{b;Rd} + k_{yy} \times (M_{y;Ed} + DM_{y;Ed}) / (C_{LT} \times M_{y;Rk})$ = **1,00** **< 1**

6 - Check stress with combined buckling of two sections:

$UC_{5-1} = N_{E;d} / (C_{max;buc} \times N_{b;Rd})$ = **n.v.t.** **< 1**

$UC_{5-2} = N_{E;d} / N_{b;Rd} + k_{yy} \times (M_{y;Ed} + DM_{y;Ed}) / (C_{LT} \times M_{y;Rk})$ = **n.v.t.** **< 1**

7 - Check shear stress boltconnection:

$UC_7 = F_{v;Ed} / F_{v;Rd}$ = **0,82** **< 1**

8 - Check bearing stress boltconnection:

$UC_8 = F_{b;Ed} / F_{b;Rd}$ = **0,64** **< 1**

Remarks:

The maximum increase of stress or totalstress is(*2) : **$U.C_{max}$ = 1,00 = 100%**

(*1) Eventually, with the checks of the stresses, the cross-section reduction method is used according to prEN 1993-1-5

(*2) The total stress or increase of stress has been related to the permissible stress

Revision :	0	A	B	C	D	E	F
Date :	13-mrt-2012						
Name :	J Goddijn						
Checked :	J Boogert						

Order :	14509	**Dossier :**	13.039	**Berekening :**
Project :	Omleiding mast 52 tot 54 en noodmast 74, 150 kv-Lijn Leiden-Zoetermeer			
Part :	Mast 55			

D&C ENGINEERING

Check equal leg angle-members according to Eurocode 3, prEN 1993-1-1 : 2003

File prEN 1993-1-1.revB.xls d.d. 2-32012, JG

Check section: *Vak 7-8-9-10-13-14 Horizontale verbanden L100x10x10* *M38*

Memberforces : **(Attention! pressure = "-" and tension ="+")**

Compression:	N_{Sd}	=	*-110,32*	kN	***Combined forces diagonal:***			
Tension:	N_{Sd}	=	*145,43*	kN	$N_{comb1;c;s;d}$ (min. Compr. or tension)	=	*0*	kN
	$F_{perpend.;s;d}$	=	*0*	kN	$N_{comb2;c;s;d}$ (max. compression)	=	*0*	kN

Angle profile : *H100/100/10* (*1)

h	=	*100*	mm	I_y	=	*1766764*	mm^4
b	=	*100*	mm	$W_{y;el;eff.1}$	=	*24615*	mm^3
t_f	=	*10*	mm	$W_{y;el;eff.2}$	=	*62597*	mm^3
y_s	=	*28,2*	mm	i_y	=	*30,4*	mm
A_{bruto}	=	*1915*	mm^2	i_v	=	*19,3*	mm

Material :

Mat. qual. Fe360 / Fe510	=	*Fe360*		Permissible stress $f_{y;d}$	=	*235,0*	N/mm^2

Geometry section and bolts:

$L_{y;cr}$	=	*3507*	mm	No. bolts / end / flange		=	*2*	
$L_{v;cr}$	=	*3507*	mm	Type of bolts	M / "	=	*30*	
$L_{tot\ (with\ comb.\ buckling)}$	=	*0*	mm	End distance bolt	e1	=	*60*	mm
$a*L_{tot\ (with\ comb.\ buckling)}$	=	*0*	mm	Centre-centre spacing bolt	s1	=	*90*	mm
$L_{perpendicular\ force}$	=	*0*	mm	Edge distance bolt	e2	=	*45*	mm
Position perpendicular force	=	*1*	(⌉=1, ⌋=2)	Boltquality	4.6/5.6/8.8/10.9	=	*4,6*	
Column profile?	=	*1*	no=1, yes=2	Rolled screw threads		=	*1*	
Thickness tie plate	=	*12*	mm	Dubble strap joint no=1, yes=2		=	*1*	

Summary checks :

1 - Check tension on member :

$UC_1 = N_{Ed} / N_{t.Rd}$ = **0,75** **< 1**

2 - Check perpendicular force on member :

$UC_2 = M_{Ed} / M_{c.Rd}$ = **n.v.t.** **< 1**

3 - Check of the member slenderness :

$UC_3 = C_{max;buc} / C_{perm}$ = **181** **< 200 or 240**

4 - Check stress in member due to compression without excentricity:

$UC_4 = N_{E;d} / (C_{max;buc} \times N_{b;Rd})$ = **0,88** **< 1**

5 - Check stress in member due to compression with excentricity:

$UC_{5-1} = N_{E;d} / (C_{max;buc} \times N_{b;Rd})$ = **n.v.t.** **< 1**

$UC_{5-2} = N_{E;d} / N_{b;Rd} + k_{yy} \times (M_{y;Ed} + DM_{y;Ed}) / (C_{LT} \times M_{y;Rk})$ = **n.v.t.** **< 1**

6 - Check stress with combined buckling of two sections:

$UC_{5-1} = N_{E;d} / (C_{max;buc} \times N_{b;Rd})$ = **n.v.t.** **< 1**

$UC_{5-2} = N_{E;d} / N_{b;Rd} + k_{yy} \times (M_{y;Ed} + DM_{y;Ed}) / (C_{LT} \times M_{y;Rk})$ = **n.v.t.** **< 1**

7 - Check shear stress boltconnection:

$UC_7 = F_{v;Ed} / F_{v;Rd}$ = **0,68** **< 1**

8 - Check bearing stress boltconnection:

$UC_8 = F_{b;Ed} / F_{b;Rd}$ = **0,66** **< 1**

Remarks:

The maximum increase of stress or totalstress is(*2) : **$U.C_{max}$ = 0,88 = 88%**

(*1) Eventually, with the checks of the stresses, the cross-section reduction method is used according to prEN 1993-1-5

(*2) The total stress or increase of stress has been related to the permissible stress

Revision :	0	A	B	C	D	E	F
Date :	13-mrt-2012						
Name :	J Goddijn						
Checked :	J Boogert						

Order :	14509	**Dossier :**	13.039	**Berekening :**
Project :	Omleiding mast 52 tot 54 en noodmast 74, 150 kv-Lijn Leiden-Zoetermeer			
Part :	Mast 55			

D&C ENGINEERING

Check equal leg angle-members according to Eurocode 3, prEN 1993-1-1 : 2003

File prEN 1993-1-1.revB.xls d.d. 2-32012, JG

Check section: *Vak 7-8-9-10-13-14 Horizontale en verticale Knikverkorters L50x50x5* *M39*

Memberforces : **(Attention! pressure = "-" and tension ="+")**

Compression:	N_{Sd}	=	-3,4	kN	***Combined forces diagonal:***			
Tension:	N_{Sd}	=	3,4	kN	$N_{comb1;c;s;d}$ (min. Compr. or tension)	=	0	kN
	$F_{perpend.;s;d}$	=	0	kN	$N_{comb2;c;s;d}$ (max. compression)	=	0	kN

Angle profile : *H50/50/5* (*1)

h	=	50	mm	I_y	=	109643	mm^4
b	=	50	mm	$W_{y;el;eff.1}$	=	3049	mm^3
t_f	=	5	mm	$W_{y;el;eff.2}$	=	7811	mm^3
y_s	=	14,0	mm	i_y	=	15,1	mm
A_{bruto}	=	480	mm^2	i_v	=	9,6	mm

Material :

Mat. qual. Fe360 / Fe510	=	Fe360		Permissible stress $f_{y;d}$	=	235,0	N/mm^2

Geometry section and bolts:

$L_{y;cr}$	=	3227	mm	No. bolts / end / flange	=	1	
$L_{v;cr}$	=	3227	mm	Type of bolts M / "	=	16	
L_{tot} (with comb. buckling)	=	0	mm	End distance bolt e1	=	30	mm
$a*L_{tot}$ (with comb. buckling)	=	0	mm	Centre-centre spacing bolt s1	=	50	mm
$L_{perpendicular\ force}$	=	0	mm	Edge distance bolt e2	=	25	mm
Position perpendicular force	=	1	(⌉=1, ⌋=2)	Boltquality 4.6/5.6/8.8/10.9	=	4,6	
Column profile?	=	1	no=1, yes=2	Rolled screw threads	=	1	
Thickness tie plate	=	5	mm	Dubble strap joint no=1, yes=2	=	1	

Summary checks :

1 - Check tension on member :

$UC_1 = N_{Ed} / N_{t.Rd}$ = **0,07** **< 1**

2 - Check perpendicular force on member :

$UC_2 = M_{Ed} / M_{c.Rd}$ = **n.v.t.** **< 1**

3 - Check of the member slenderness :

$UC_3 = C_{max;buc} / C_{perm}$ = **336** **< 200 or 240**

4 - Check stress in member due to compression without excentricity:

$UC_4 = N_{E;d} / (C_{max;buc} \times N_{b;Rd})$ = **n.v.t.** **< 1**

5 - Check stress in member due to compression with excentricity:

$UC_{5-1} = N_{E;d} / (C_{max;buc} \times N_{b;Rd})$ = **0,42** **< 1**

$UC_{5-2} = N_{E;d} / N_{b;Rd} + k_{yy} \times (M_{y;Ed} + DM_{y;Ed}) / (C_{LT} \times M_{y;Rk})$ = **0,48** **< 1**

6 - Check stress with combined buckling of two sections:

$UC_{5-1} = N_{E;d} / (C_{max;buc} \times N_{b;Rd})$ = **n.v.t.** **< 1**

$UC_{5-2} = N_{E;d} / N_{b;Rd} + k_{yy} \times (M_{y;Ed} + DM_{y;Ed}) / (C_{LT} \times M_{y;Rk})$ = **n.v.t.** **< 1**

7 - Check shear stress boltconnection:

$UC_7 = F_{v;Ed} / F_{v;Rd}$ = **0,11** **< 1**

8 - Check bearing stress boltconnection:

$UC_8 = F_{b;Ed} / F_{b;Rd}$ = **0,12** **< 1**

Remarks:

The maximum increase of stress or totalstress is(*2) : **$U.C_{max}$ = 0,48 = 48%**

(*1) Eventually, with the checks of the stresses, the cross-section reduction method is used according to prEN 1993-1-5

(*2) The total stress or increase of stress has been related to the permissible stress

Revision :	0	A	B	C	D	E	F
Date :	13-mrt-2012						
Name :	J Goddijn						
Checked :	J Boogert						

Order :	14509	**Dossier :**	13.039	**Berekening :**
Project :	Omleiding mast 52 tot 54 en noodmast 74, 150 kv-Lijn Leiden-Zoetermeer			
Part :	Mast 55			

D&C ENGINEERING

Check equal leg angle-members according to Eurocode 3, prEN 1993-1-1 : 2003

File prEN 1993-1-1.revB.xls d.d. 2-32012, JG

Check section: *Vak 7-8-9-10-13-14 Verticale Knikverkorters L65x50x5* *M40*

Memberforces : **(Attention! pressure = "-" and tension ="+")**

Compression:	N_{Sd}	=	*-4,34*	kN	***Combined forces diagonal:***			
Tension:	N_{Sd}	=	*6,15*	kN	$N_{comb1;c;s;d}$ (min. Compr. or tension)	=	*0*	kN
	$F_{perpend.;s;d}$	=	*0*	kN	$N_{comb2;c;s;d}$ (max. compression)	=	*0*	kN

Angle profile : *H65/50/5* (*1)

h	=	*65*	mm	I_y	=	*230454*	mm^4
b	=	*50*	mm	$W_{y;el;eff.1}$	=	*4389*	mm^3
t_f	=	*5*	mm	$W_{y;el;eff.2}$	=	*18449*	mm^3
y_s	=	*12,5*	mm	i_y	=	*20,4*	mm
A_{bruto}	=	*554*	mm^2	i_v	=	*10,5*	mm

Material :

Mat. qual. Fe360 / Fe510	=	*Fe360*		Permissible stress $f_{y;d}$	=	*235,0*	N/mm^2

Geometry section and bolts:

$L_{y;cr}$	=	*1503*	mm	No. bolts / end / flange	=	*1*	
$L_{v;cr}$	=	*1503*	mm	Type of bolts M / "	=	*20*	
$L_{tot\ (with\ comb.\ buckling)}$	=	*0*	mm	End distance bolt e1	=	*60*	mm
$a*L_{tot\ (with\ comb.\ buckling)}$	=	*0*	mm	Centre-centre spacing bolt s1	=	*90*	mm
$L_{perpendicular\ force}$	=	*0*	mm	Edge distance bolt e2	=	*25*	mm
Position perpendicular force	=	*1*	(⌉=1, ⌋=2)	Boltquality 4.6/5.6/8.8/10.9	=	*4,6*	
Column profile?	=	*1*	no=1, yes=2	Rolled screw threads	=	*1*	
Thickness tie plate	=	*5*	mm	Dubble strap joint no=1, yes=2	=	*1*	

Summary checks :

1 - Check tension on member :

$UC_1 = N_{Ed} / N_{t.Rd}$ = **0,15** **< 1**

2 - Check perpendicular force on member :

$UC_2 = M_{Ed} / M_{c.Rd}$ = **n.v.t.** **< 1**

3 - Check of the member slenderness :

$UC_3 = C_{max;buc} / C_{perm}$ = **143** **< 200 or 240**

4 - Check stress in member due to compression without excentricity:

$UC_4 = N_{E;d} / (C_{max;buc} \times N_{b;Rd})$ = **n.v.t.** **< 1**

5 - Check stress in member due to compression with excentricity:

$UC_{5-1} = N_{E;d} / (C_{max;buc} \times N_{b;Rd})$ = **0,10** **< 1**

$UC_{5-2} = N_{E;d} / N_{b;Rd} + k_{yy} \times (M_{y;Ed} + DM_{y;Ed}) / (C_{LT} \times M_{y;Rk})$ = **0,13** **< 1**

6 - Check stress with combined buckling of two sections:

$UC_{5-1} = N_{E;d} / (C_{max;buc} \times N_{b;Rd})$ = **n.v.t.** **< 1**

$UC_{5-2} = N_{E;d} / N_{b;Rd} + k_{yy} \times (M_{y;Ed} + DM_{y;Ed}) / (C_{LT} \times M_{y;Rk})$ = **n.v.t.** **< 1**

7 - Check shear stress boltconnection:

$UC_7 = F_{v;Ed} / F_{v;Rd}$ = **0,13** **< 1**

8 - Check bearing stress boltconnection:

$UC_8 = F_{b;Ed} / F_{b;Rd}$ = **0,16** **< 1**

Remarks:

The maximum increase of stress or totalstress is(*2) : **$U.C_{max}$ = 0,16 = 16%**

(*1) Eventually, with the checks of the stresses, the cross-section reduction method is used according to prEN 1993-1-5.

(*2) The total stress or increase of stress has been related to the permissible stress.

Revision :	**0**	**A**	**B**	**C**	**D**	**E**	**F**
Date :	13-mrt-2012						
Name :	J Goddijn						
Checked :	J Boogert						

Order :	14509	**Dossier :**	13.039	**Berekening :**
Project :	Omleiding mast 52 tot 54 en noodmast 74, 150 kv-Lijn Leiden-Zoetermeer			
Part :	Mast 55			

D&C ENGINEERING

Check equal leg angle-members according to Eurocode 3, prEN 1993-1-1 : 2003

File prEN 1993-1-1.revB.xls d.d. 2-32012, JG

Check section: *Vak 7-8-9-10-13-14 Schuine verbanden L130x130x12* *M41*

Memberforces : **(Attention! pressure = "-" and tension ="+")**

Compression:	N_{Sd}	=	*-187,24*	kN	***Combined forces diagonal:***			
Tension:	N_{Sd}	=	*185,01*	kN	$N_{comb1;c;s;d}$ (min. Compr. or tension)	=	*0*	kN
	$F_{perpend.;s;d}$	=	*0*	kN	$N_{comb2;c;s;d}$ (max. compression)	=	*0*	kN

Angle profile : *H130/130/12* (*1)

h	=	*130*	mm	I_y	=	*4721746*	mm^4
b	=	*130*	mm	$W_{y;el;eff.1}$	=	*50442*	mm^3
t_f	=	*12*	mm	$W_{y;el;eff.2}$	=	*129742*	mm^3
y_s	=	*36,4*	mm	i_y	=	*39,7*	mm
A_{bruto}	=	*2997*	mm^2	i_v	=	*25,2*	mm

Material :

Mat. qual. Fe360 / Fe510	=	*Fe360*		Permissible stress $f_{y;d}$	=	*235,0*	N/mm^2

Geometry section and bolts:

$L_{y;cr}$	=	*2376*	mm	No. bolts / end / flange	=	*4*	
$L_{v;cr}$	=	*2376*	mm	Type of bolts M / "	=	*24*	
$L_{tot\ (with\ comb.\ buckling)}$	=	*0*	mm	End distance bolt e1	=	*50*	mm
$a*L_{tot\ (with\ comb.\ buckling)}$	=	*0*	mm	Centre-centre spacing bolt s1	=	*80*	mm
$L_{perpendicular\ force}$	=	*0*	mm	Edge distance bolt e2	=	*45*	mm
Position perpendicular force	=	*1*	(⌉=1, ⌋=2)	Boltquality 4.6/5.6/8.8/10.9	=	*4,6*	
Column profile?	=	*1*	no=1, yes=2	Rolled screw threads	=	*1*	
Thickness tie plate	=	*12*	mm	Dubble strap joint no=1, yes=2	=	*1*	

Summary checks :

1 - Check tension on member :

$UC_1 = N_{Ed} / N_{t.Rd}$ = **0,44** **< 1**

2 - Check perpendicular force on member :

$UC_2 = M_{Ed} / M_{c.Rd}$ = **n.v.t.** **< 1**

3 - Check of the member slenderness :

$UC_3 = C_{max;buc} / C_{perm}$ = **94** **< 200 or 240**

4 - Check stress in member due to compression without excentricity:

$UC_4 = N_{E;d} / (C_{max;buc} \times N_{b;Rd})$ = **0,45** **< 1**

5 - Check stress in member due to compression with excentricity:

$UC_{5-1} = N_{E;d} / (C_{max;buc} \times N_{b;Rd})$ = **n.v.t.** **< 1**

$UC_{5-2} = N_{E;d} / N_{b;Rd} + k_{yy} \times (M_{y;Ed} + DM_{y;Ed}) / (C_{LT} \times M_{y;Rk})$ = **n.v.t.** **< 1**

6 - Check stress with combined buckling of two sections:

$UC_{5-1} = N_{E;d} / (C_{max;buc} \times N_{b;Rd})$ = **n.v.t.** **< 1**

$UC_{5-2} = N_{E;d} / N_{b;Rd} + k_{yy} \times (M_{y;Ed} + DM_{y;Ed}) / (C_{LT} \times M_{y;Rk})$ = **n.v.t.** **< 1**

7 - Check shear stress boltconnection:

$UC_7 = F_{v;Ed} / F_{v;Rd}$ = **0,69** **< 1**

8 - Check bearing stress boltconnection:

$UC_8 = F_{b;Ed} / F_{b;Rd}$ = **0,35** **< 1**

Remarks:

The maximum increase of stress or totalstress is(*2) : **$U.C_{max}$ = 0,69 = 69%**

(*1) Eventually, with the checks of the stresses, the cross-section reduction method is used according to prEN 1993-1-5

(*2) The total stress or increase of stress has been related to the permissible stress

Revision :	0	A	B	C	D	E	F
Date :	13-mrt-2012						
Name :	J Goddijn						
Checked :	J Boogert						

Order :	14509	**Dossier :**	13.039	**Berekening :**
Project :	Omleiding mast 52 tot 54 en noodmast 74, 150 kv-Lijn Leiden-Zoetermeer			
Part :	Mast 55			

D&C ENGINEERING

Check equal leg angle-members according to Eurocode 3, prEN 1993-1-1 : 2003

File prEN 1993-1-1.revB.xls d.d. 2-32012, JG

Check section: *Vak 7-8-9-10-13-14 Horizontale kruizen L90x90x9* *M42*

Memberforces : **(Attention! pressure = "-" and tension ="+")**

Compression:	N_{Sd}	=	*-47,7*	kN	***Combined forces diagonal:***			
Tension:	N_{Sd}	=	*47,51*	kN	$N_{comb1;c;s;d}$ (min. Compr. or tension)	=	*0*	kN
	$F_{perpend.;s;d}$	=	*0*	kN	$N_{comb2;c;s;d}$ (max. compression)	=	*0*	kN

Angle profile : *H90/90/9* (*1)

h	=	*90*	mm	I_y	=	*1158332*	mm^4
b	=	*90*	mm	$W_{y;el;eff.1}$	=	*17927*	mm^3
t_f	=	*9*	mm	$W_{y;el;eff.2}$	=	*45626*	mm^3
y_s	=	*25,4*	mm	i_y	=	*27,3*	mm
A_{bruto}	=	*1552*	mm^2	i_v	=	*17,4*	mm

Material :

Mat. qual. Fe360 / Fe510	=	*Fe360*		Permissible stress $f_{y;d}$	=	*235,0*	N/mm^2

Geometry section and bolts:

$L_{y;cr}$	=	*2540*	mm	No. bolts / end / flange	=	*1*	
$L_{v;cr}$	=	*2540*	mm	Type of bolts M / "	=	*30*	
L_{tot} (with comb. buckling)	=	*0*	mm	End distance bolt e1	=	*60*	mm
$a*L_{tot}$ (with comb. bucklingl)	=	*0*	mm	Centre-centre spacing bolt s1	=	*90*	mm
$L_{perpendicular\ force}$	=	*0*	mm	Edge distance bolt e2	=	*35*	mm
Position perpendicular force	=	*1*	(⌉=1, ⌋=2)	Boltquality 4.6/5.6/8.8/10.9	=	*4,6*	
Column profile?	=	*1*	no=1, yes=2	Rolled screw threads	=	*1*	
Thickness tie plate	=	*10*	mm	Dubble strap joint no=1, yes=2	=	*1*	

Summary checks :

1 - Check tension on member :

$UC_1 = N_{Ed} / N_{t.Rd}$ = **0,50** **< 1**

2 - Check perpendicular force on member :

$UC_2 = M_{Ed} / M_{c.Rd}$ = **n.v.t.** **< 1**

3 - Check of the member slenderness :

$UC_3 = C_{max;buc} / C_{perm}$ = **146** **< 200 or 240**

4 - Check stress in member due to compression without excentricity:

$UC_4 = N_{E;d} / (C_{max;buc} \times N_{b;Rd})$ = **n.v.t.** **< 1**

5 - Check stress in member due to compression with excentricity:

$UC_{5-1} = N_{E;d} / (C_{max;buc} \times N_{b;Rd})$ = **0,41** **< 1**

$UC_{5-2} = N_{E;d} / N_{b;Rd} + k_{yy} \times (M_{y;Ed} + DM_{y;Ed}) / (C_{LT} \times M_{y;Rk})$ = **0,61** **< 1**

6 - Check stress with combined buckling of two sections:

$UC_{5-1} = N_{E;d} / (C_{max;buc} \times N_{b;Rd})$ = **n.v.t.** **< 1**

$UC_{5-2} = N_{E;d} / N_{b;Rd} + k_{yy} \times (M_{y;Ed} + DM_{y;Ed}) / (C_{LT} \times M_{y;Rk})$ = **n.v.t.** **< 1**

7 - Check shear stress boltconnection:

$UC_7 = F_{v;Ed} / F_{v;Rd}$ = **0,44** **< 1**

8 - Check bearing stress boltconnection:

$UC_8 = F_{b;Ed} / F_{b;Rd}$ = **0,79** **< 1**

Remarks:

The maximum increase of stress or totalstress is(*2) : **$U.C_{max}$ = 0,79 = 79%**

(*1) Eventually, with the checks of the stresses, the cross-section reduction method is used according to prEN 1993-1-5

(*2) The total stress or increase of stress has been related to the permissible stress

Revision :	0	A	B	C	D	E	F
Date :	13-mrt-2012						
Name :	J Goddijn						
Checked :	J Boogert						

Order :	14509	**Dossier :**	13.039	**Berekening :**
Project :	Omleiding mast 52 tot 54 en noodmast 74, 150 kv-Lijn Leiden-Zoetermeer			
Part :	Mast 55			

D&C ENGINEERING

Check equal leg angle-members according to Eurocode 3, prEN 1993-1-1 : 2003

File prEN 1993-1-1.revB.xls d.d. 2-32012, JG

Check section: *Vak 10-11-12-15-t_m 21 Randen L140x140x13* *M43*

Memberforces : **(Attention! pressure = "-" and tension ="+")**

Compression:	N_{Sd}	=	*-422,37*	kN	***Combined forces diagonal:***			
Tension:	N_{Sd}	=	*317,23*	kN	$N_{comb1;c;s;d}$ (min. Compr. or tension)	=	*0*	kN
	$F_{perpend.;s;d}$	=	*0*	kN	$N_{comb2;c;s;d}$ (max. compression)	=	*0*	kN

Angle profile : *H140/140/13* (*1)

h	=	*200*	mm	I_y	=	*35603980*	mm^4
b	=	*200*	mm	$W_{y;el;eff.1}$	=	*252744*	mm^3
t_f	=	*26*	mm	$W_{y;el;eff.2}$	=	*602125*	mm^3
y_s	=	*59,1*	mm	i_y	=	*60,4*	mm
A_{bruto}	=	*9759*	mm^2	i_v	=	*38,8*	mm

Material :

Mat. qual. Fe360 / Fe510	=	*Fe360*		Permissible stress $f_{y;d}$	=	*235,0*	N/mm^2

Geometry section and bolts:

$L_{y;cr}$	=	*4356*	mm	No. bolts / end / flange		=	*4*	**(Per flange !)**
$L_{v;cr}$	=	*2220*	mm	Type of bolts	M / "	=	*24*	
L_{tot} (with comb. buckling)	=	*0*	mm	End distance bolt	e1	=	*55*	mm
$a*L_{tot}$ (with comb. biuckling)	=	*0*	mm	Centre-centre spacing bolt	s1	=	*80*	mm
$L_{perpendicular\ force}$	=	*0*	mm	Edge distance bolt	e2	=	*45*	mm
Position perpendicular force	=	*1*	(⌉=1, ⌋=2)	Boltquality	4.6/5.6/8.8/10.9	=	*4,6*	
Column profile?	=	*2*	no=1, yes=2	Rolled screw threads		=	*1*	
Thickness tie plate	=	*12*	mm	Dubble strap joint no=1, yes=2		=	*1*	

Summary checks :

1 - Check tension on member :

$UC_1 = N_{Ed} / N_{t.Rd}$ = **0,15** **< 1**

2 - Check perpendicular force on member :

$UC_2 = M_{Ed} / M_{c.Rd}$ = **n.v.t.** **< 1**

3 - Check of the member slenderness :

$UC_3 = C_{max;buc} / C_{perm}$ = **72** **< 120**

4 - Check stress in member due to compression without excentricity:

$UC_4 = N_{E;d} / (C_{max;buc} \times N_{b;Rd})$ = **0,25** **< 1**

5 - Check stress in member due to compression with excentricity:

$UC_{5-1} = N_{E;d} / (C_{max;buc} \times N_{b;Rd})$ = **n.v.t.** **< 1**

$UC_{5-2} = N_{E;d} / N_{b;Rd} + k_{yy} \times (M_{y;Ed} + DM_{y;Ed}) / (C_{LT} \times M_{y;Rk})$ = **n.v.t.** **< 1**

6 - Check stress with combined buckling of two sections:

$UC_{5-1} = N_{E;d} / (C_{max;buc} \times N_{b;Rd})$ = **n.v.t.** **< 1**

$UC_{5-2} = N_{E;d} / N_{b;Rd} + k_{yy} \times (M_{y;Ed} + DM_{y;Ed}) / (C_{LT} \times M_{y;Rk})$ = **n.v.t.** **< 1**

7 - Check shear stress boltconnection:

$UC_7 = F_{v;Ed} / F_{v;Rd}$ = **0,78** **< 1**

8 - Check bearing stress boltconnection:

$UC_8 = F_{b;Ed} / F_{b;Rd}$ = **0,33** **< 1**

Remarks:

The maximum increase of stress or totalstress is(*2) : **$U.C_{max}$ = 0,78 = 78%**

(*1) Eventually, with the checks of the stresses, the cross-section reduction method is used according to prEN 1993-1-5

(*2) The total stress or increase of stress has been related to the permissible stress

Revision :	0	A	B	C	D	E	F
Date :	13-mrt-2012						
Name :	J Goddijn						
Checked :	J Boogert						

Order :	14509	**Dossier :**	13.039	**Berekening :**
Project :	Omleiding mast 52 tot 54 en noodmast 74, 150 kv-Lijn Leiden-Zoetermeer			
Part :	Mast 55			

D&C ENGINEERING

Check equal leg angle-members according to Eurocode 3, prEN 1993-1-1 : 2003

File prEN 1993-1-1.revB.xls d.d. 2-32012, JG

Check section: *Vak 10-11-12-15-t_m 21 Horizontale Knikverkorters L50x50x5* *M44*

Memberforces : **(Attention! pressure = "-" and tension ="+")**

Compression:	N_{Sd}	=	-2,21	kN	***Combined forces diagonal:***			
Tension:	N_{Sd}	=	2,21	kN	$N_{comb1;c;s;d}$ (min. Compr. or tension)	=	0	kN
	$F_{perpend.;s;d}$	=	0	kN	$N_{comb2;c;s;d}$ (max. compression)	=	0	kN

Angle profile : *H50/50/5* (*1)

h	=	50	mm	I_y	=	109643	mm^4
b	=	50	mm	$W_{y;el;eff.1}$	=	3049	mm^3
t_f	=	5	mm	$W_{y;el;eff.2}$	=	7811	mm^3
y_s	=	14,0	mm	i_y	=	15,1	mm
A_{bruto}	=	480	mm^2	i_v	=	9,6	mm

Material :

Mat. qual. Fe360 / Fe510	=	Fe360		Permissible stress $f_{y;d}$	=	235,0	N/mm^2

Geometry section and bolts:

$L_{y;cr}$	=	2536	mm	No. bolts / end / flange	=	1	
$L_{v;cr}$	=	1268	mm	Type of bolts M / "	=	16	
$L_{tot\ (with\ comb.\ buckling)}$	=	0	mm	End distance bolt e1	=	30	mm
$a*L_{tot\ (with\ comb.\ buckling)}$	=	0	mm	Centre-centre spacing bolt s1	=	50	mm
$L_{perpendicular\ force}$	=	0	mm	Edge distance bolt e2	=	25	mm
Position perpendicular force	=	1	(⌉=1, ⌋=2)	Boltquality 4.6/5.6/8.8/10.9	=	4,6	
Column profile?	=	1	no=1, yes=2	Rolled screw threads	=	1	
Thickness tie plate	=	5	mm	Dubble strap joint no=1, yes=2	=	1	

Summary checks :

1 - Check tension on member :

$UC_1 = N_{Ed} / N_{t.Rd}$ = **0,05** **< 1**

2 - Check perpendicular force on member :

$UC_2 = M_{Ed} / M_{c.Rd}$ = **n.v.t.** **< 1**

3 - Check of the member slenderness :

$UC_3 = C_{max;buc} / C_{perm}$ = **168** **< 200 or 240**

4 - Check stress in member due to compression without excentricity:

$UC_4 = N_{E;d} / (C_{max;buc} \times N_{b;Rd})$ = **n.v.t.** **< 1**

5 - Check stress in member due to compression with excentricity:

$UC_{5-1} = N_{E;d} / (C_{max;buc} \times N_{b;Rd})$ = **0,08** **< 1**

$UC_{5-2} = N_{E;d} / N_{b;Rd} + k_{yy} \times (M_{y;Ed} + DM_{y;Ed}) / (C_{LT} \times M_{y;Rk})$ = **0,11** **< 1**

6 - Check stress with combined buckling of two sections:

$UC_{5-1} = N_{E;d} / (C_{max;buc} \times N_{b;Rd})$ = **n.v.t.** **< 1**

$UC_{5-2} = N_{E;d} / N_{b;Rd} + k_{yy} \times (M_{y;Ed} + DM_{y;Ed}) / (C_{LT} \times M_{y;Rk})$ = **n.v.t.** **< 1**

7 - Check shear stress boltconnection:

$UC_7 = F_{v;Ed} / F_{v;Rd}$ = **0,07** **< 1**

8 - Check bearing stress boltconnection:

$UC_8 = F_{b;Ed} / F_{b;Rd}$ = **0,08** **< 1**

Remarks:

The maximum increase of stress or totalstress is(*2) : **$U.C_{max}$ = 0,11 = 11%**

(*1) Eventually, with the checks of the stresses, the cross-section reduction method is used according to prEN 1993-1-5

(*2) The total stress or increase of stress has been related to the permissible stress

Revision :	0	A	B	C	D	E	F
Date :	13-mrt-2012						
Name :	J Goddijn						
Checked :	J Boogert						

Order :	14509	**Dossier :**	13.039	**Berekening :**
Project :	Omleiding mast 52 tot 54 en noodmast 74, 150 kv-Lijn Leiden-Zoetermeer			
Part :	Mast 55			

D&C ENGINEERING

Check equal leg angle-members according to Eurocode 3, prEN 1993-1-1 : 2003

File prEN 1993-1-1.revB.xls d.d. 2-32012, JG

Check section: *Vak 10-11-12-15-t_m 21 Verticale Knikverkorters L50x50x5* *M45*

Memberforces : **(Attention! pressure = "-" and tension ="+")**

Compression:	N_{Sd}	=	-3,37	kN	***Combined forces diagonal:***			
Tension:	N_{Sd}	=	3,56	kN	$N_{comb1;c;s;d}$ (min. Compr. or tension)	=	0	kN
	$F_{perpend.;s;d}$	=	0	kN	$N_{comb2;c;s;d}$ (max. compression)	=	0	kN

Angle profile : *H50/50/5* (*1)

h	=	50	mm	I_y	=	109643	mm^4
b	=	50	mm	$W_{y;el;eff.1}$	=	3049	mm^3
t_f	=	5	mm	$W_{y;el;eff.2}$	=	7811	mm^3
y_s	=	14,0	mm	i_y	=	15,1	mm
A_{bruto}	=	480	mm^2	i_v	=	9,6	mm

Material :

Mat. qual. Fe360 / Fe510	=	Fe360		Permissible stress $f_{y;d}$	=	235,0	N/mm^2

Geometry section and bolts:

$L_{y;cr}$	=	2179	mm	No. bolts / end / flange	=	1	
$L_{v;cr}$	=	2179	mm	Type of bolts M / "	=	16	
$L_{tot\ (with\ comb.\ buckling)}$	=	0	mm	End distance bolt e1	=	30	mm
$a*L_{tot\ (with\ comb.\ buckling)}$	=	0	mm	Centre-centre spacing bolt s1	=	50	mm
$L_{perpendicular\ force}$	=	0	mm	Edge distance bolt e2	=	25	mm
Position perpendicular force	=	1	(⌉=1, ⌋=2)	Boltquality 4.6/5.6/8.8/10.9	=	4,6	
Column profile?	=	1	no=1, yes=2	Rolled screw threads	=	1	
Thickness tie plate	=	5	mm	Dubble strap joint no=1, yes=2	=	1	

Summary checks :

1 - Check tension on member :

$UC_1 = N_{Ed} / N_{t.Rd}$ = **0,08** **< 1**

2 - Check perpendicular force on member :

$UC_2 = M_{Ed} / M_{c.Rd}$ = **n.v.t.** **< 1**

3 - Check of the member slenderness :

$UC_3 = C_{max;buc} / C_{perm}$ = **227** **< 200 or 240**

4 - Check stress in member due to compression without excentricity:

$UC_4 = N_{E;d} / (C_{max;buc} \times N_{b;Rd})$ = **n.v.t.** **< 1**

5 - Check stress in member due to compression with excentricity:

$UC_{5-1} = N_{E;d} / (C_{max;buc} \times N_{b;Rd})$ = **0,20** **< 1**

$UC_{5-2} = N_{E;d} / N_{b;Rd} + k_{yy} \times (M_{y;Ed} + DM_{y;Ed}) / (C_{LT} \times M_{y;Rk})$ = **0,25** **< 1**

6 - Check stress with combined buckling of two sections:

$UC_{5-1} = N_{E;d} / (C_{max;buc} \times N_{b;Rd})$ = **n.v.t.** **< 1**

$UC_{5-2} = N_{E;d} / N_{b;Rd} + k_{yy} \times (M_{y;Ed} + DM_{y;Ed}) / (C_{LT} \times M_{y;Rk})$ = **n.v.t.** **< 1**

7 - Check shear stress boltconnection:

$UC_7 = F_{v;Ed} / F_{v;Rd}$ = **0,12** **< 1**

8 - Check bearing stress boltconnection:

$UC_8 = F_{b;Ed} / F_{b;Rd}$ = **0,13** **< 1**

Remarks:

The maximum increase of stress or totalstress is(*2) : **$U.C_{max}$ = 0,25 = 25%**

(*1) Eventually, with the checks of the stresses, the cross-section reduction method is used according to prEN 1993-1-5

(*2) The total stress or increase of stress has been related to the permissible stress

Revision :	0	A	B	C	D	E	F
Date :	13-mrt-2012						
Name :	J Goddijn						
Checked :	J Boogert						

Order :	14509	**Dossier :** 13.039	**Berekening :**
Project :	Omleiding mast 52 tot 54 en noodmast 74, 150 kv-Lijn Leiden-Zoetermeer		
Part :	Mast 55		

D&C ENGINEERING

Check equal leg angle-members according to Eurocode 3, prEN 1993-1-1 : 2003

File prEN 1993-1-1.revB.xls d.d. 2-32012, JG

Check section: *Vak 10-11-12-15-t_m 21 Verticale verbanden L150x100x10* *M46*

Memberforces : **(Attention! pressure = "-" and tension ="+")**

Compression:	N_{Sd}	=	*-119,4*	kN	***Combined forces diagonal:***			
Tension:	N_{Sd}	=	*93,04*	kN	$N_{comb1;c;s;d}$ (min. Compr. or tension)	=	*0*	kN
	$F_{perpend.;s;d}$	=	*0*	kN	$N_{comb2;c;s;d}$ (max. compression)	=	*0*	kN

Angle profile : *H150/100/10* (*1)

h	=	*150*	mm	I_y	=	*5516683*	mm^4
b	=	*100*	mm	$W_{y;el;eff.1}$	=	*43563*	mm^3
t_f	=	*10*	mm	$W_{y;el;eff.2}$	=	*236120*	mm^3
y_s	=	*23,4*	mm	i_y	=	*47,8*	mm
A_{bruto}	=	*2418*	mm^2	i_v	=	*21,5*	mm

Material :

Mat. qual. Fe360 / Fe510	=	*Fe360*		Permissible stress $f_{y;d}$	=	*235,0*	N/mm^2

Geometry section and bolts:

$L_{y;cr}$	=	*4099*	mm	No. bolts / end / flange	=	*2*	
$L_{v;cr}$	=	*2089*	mm	Type of bolts M / "	=	*24*	
L_{tot} (with comb. buckling)	=	*0*	mm	End distance bolt e1	=	*50*	mm
$a*L_{tot}$ (with comb. buckling)	=	*0*	mm	Centre-centre spacing bolt s1	=	*90*	mm
$L_{perpendicular\ force}$	=	*0*	mm	Edge distance bolt e2	=	*45*	mm
Position perpendicular force	=	*1*	(⌉=1, ⌋=2)	Boltquality 4.6/5.6/8.8/10.9	=	*4,6*	
Column profile?	=	*1*	no=1, yes=2	Rolled screw threads	=	*1*	
Thickness tie plate	=	*10*	mm	Dubble strap joint no=1, yes=2	=	*1*	

Summary checks :

1 - Check tension on member :

$UC_1 = N_{Ed} / N_{t.Rd}$ = **0,29** **< 1**

2 - Check perpendicular force on member :

$UC_2 = M_{Ed} / M_{c.Rd}$ = **n.v.t.** **< 1**

3 - Check of the member slenderness :

$UC_3 = C_{max;buc} / C_{perm}$ = **97** **< 200 or 240**

4 - Check stress in member due to compression without excentricity:

$UC_4 = N_{E;d} / (C_{max;buc} \times N_{b;Rd})$ = **0,36** **< 1**

5 - Check stress in member due to compression with excentricity:

$UC_{5-1} = N_{E;d} / (C_{max;buc} \times N_{b;Rd})$ = **n.v.t.** **< 1**

$UC_{5-2} = N_{E;d} / N_{b;Rd} + k_{yy} \times (M_{y;Ed} + DM_{y;Ed}) / (C_{LT} \times M_{y;Rk})$ = **n.v.t.** **< 1**

6 - Check stress with combined buckling of two sections:

$UC_{5-1} = N_{E;d} / (C_{max;buc} \times N_{b;Rd})$ = **n.v.t.** **< 1**

$UC_{5-2} = N_{E;d} / N_{b;Rd} + k_{yy} \times (M_{y;Ed} + DM_{y;Ed}) / (C_{LT} \times M_{y;Rk})$ = **n.v.t.** **< 1**

7 - Check shear stress boltconnection:

$UC_7 = F_{v;Ed} / F_{v;Rd}$ = **0,88** **< 1**

8 - Check bearing stress boltconnection:

$UC_8 = F_{b;Ed} / F_{b;Rd}$ = **0,42** **< 1**

Remarks:

The maximum increase of stress or totalstress is(*2) : **$U.C_{max}$ = 0,88 = 88%**

(*1) Eventually, with the checks of the stresses, the cross-section reduction method is used according to prEN 1993-1-5

(*2) The total stress or increase of stress has been related to the permissible stress

Revision :	0	A	B	C	D	E	F
Date :	13-mrt-2012						
Name :	J Goddijn						
Checked :	J Boogert						

Order :	14509	**Dossier :** 13.039	**Berekening :**
Project :	Omleiding mast 52 tot 54 en noodmast 74, 150 kv-Lijn Leiden-Zoetermeer		
Part :	Mast 55		

D&C ENGINEERING

Check equal leg angle-members according to Eurocode 3, prEN 1993-1-1 : 2003

File prEN 1993-1-1.revB.xls d.d. 2-32012, JG

Check section: *Vak 10-11-12-15-t_m 21 Verticale verbanden L110x110x10* *M47*

Memberforces : **(Attention! pressure = "-" and tension ="+")**

Compression:	N_{Sd}	=	*-128,02*	kN	***Combined forces diagonal:***			
Tension:	N_{Sd}	=	*118,97*	kN	$N_{comb1;c;s;d}$ (min. Compr. or tension)	=	*0*	kN
	$F_{perpend.;s;d}$	=	*0*	kN	$N_{comb2;c;s;d}$ (max. compression)	=	*0*	kN

Angle profile : *H110/110/10* (*1)

h	=	*110*	mm	I_y	=	*2386992*	mm^4
b	=	*110*	mm	$W_{y;el;eff.1}$	=	*30108*	mm^3
t_f	=	*10*	mm	$W_{y;el;eff.2}$	=	*77703*	mm^3
y_s	=	*30,7*	mm	i_y	=	*33,6*	mm
A_{bruto}	=	*2115*	mm^2	i_v	=	*21,3*	mm

Material :

Mat. qual. Fe360 / Fe510	=	*Fe360*		Permissible stress $f_{y;d}$	=	*235,0*	N/mm^2

Geometry section and bolts:

$L_{y;cr}$	=	*5030*	mm	No. bolts / end / flange		=	*3*	
$L_{v;cr}$	=	*2651*	mm	Type of bolts	M / "	=	*20*	
$L_{tot\ (with\ comb.\ buckling)}$	=	*0*	mm	End distance bolt	e1	=	*60*	mm
$a*L_{tot\ (with\ comb.\ buckling)}$	=	*0*	mm	Centre-centre spacing bolt	s1	=	*90*	mm
$L_{perpendicular\ force}$	=	*0*	mm	Edge distance bolt	e2	=	*45*	mm
Position perpendicular force	=	*1*	(⌉=1, ⌋=2)	Boltquality	4.6/5.6/8.8/10.9	=	*4,6*	
Column profile?	=	*1*	no=1, yes=2	Rolled screw threads		=	*1*	
Thickness tie plate	=	*12*	mm	Dubble strap joint no=1, yes=2		=	*1*	

Summary checks :

1 - Check tension on member :

$UC_1 = N_{Ed} / N_{t.Rd}$ = **0,35** **< 1**

2 - Check perpendicular force on member :

$UC_2 = M_{Ed} / M_{c.Rd}$ = **n.v.t.** **< 1**

3 - Check of the member slenderness :

$UC_3 = C_{max;buc} / C_{perm}$ = **150** **< 200 or 240**

4 - Check stress in member due to compression without excentricity:

$UC_4 = N_{E;d} / (C_{max;buc} \times N_{b;Rd})$ = **0,83** **< 1**

5 - Check stress in member due to compression with excentricity:

$UC_{5-1} = N_{E;d} / (C_{max;buc} \times N_{b;Rd})$ = **n.v.t.** **< 1**

$UC_{5-2} = N_{E;d} / N_{b;Rd} + k_{yy} \times (M_{y;Ed} + DM_{y;Ed}) / (C_{LT} \times M_{y;Rk})$ = **n.v.t.** **< 1**

6 - Check stress with combined buckling of two sections:

$UC_{5-1} = N_{E;d} / (C_{max;buc} \times N_{b;Rd})$ = **n.v.t.** **< 1**

$UC_{5-2} = N_{E;d} / N_{b;Rd} + k_{yy} \times (M_{y;Ed} + DM_{y;Ed}) / (C_{LT} \times M_{y;Rk})$ = **n.v.t.** **< 1**

7 - Check shear stress boltconnection:

$UC_7 = F_{v;Ed} / F_{v;Rd}$ = **0,91** **< 1**

8 - Check bearing stress boltconnection:

$UC_8 = F_{b;Ed} / F_{b;Rd}$ = **0,30** **< 1**

Remarks:

The maximum increase of stress or totalstress is(*2) : **$U.C_{max}$ = 0,91 = 91%**

(*1) Eventually, with the checks of the stresses, the cross-section reduction method is used according to prEN 1993-1-5

(*2) The total stress or increase of stress has been related to the permissible stress

Revision :	0	A	B	C	D	E	F
Date :	13-mrt-2012						
Name :	J Goddijn						
Checked :	J Boogert						

Order :	14509	**Dossier :**	13.039	**Berekening :**
Project :	Omleiding mast 52 tot 54 en noodmast 74, 150 kv-Lijn Leiden-Zoetermeer			
Part :	Mast 55			

D&C ENGINEERING

Check equal leg angle-members according to Eurocode 3, prEN 1993-1-1 : 2003

File prEN 1993-1-1.revB.xls d.d. 2-32012, JG

Check section: *Vak 10-11-12-15-t_m 21 Boven randen L120x120x11* *M48*

Memberforces : **(Attention! pressure = "-" and tension ="+")**

Compression:	N_{Sd}	=	*-102,18*	kN	***Combined forces diagonal:***			
Tension:	N_{Sd}	=	*152,02*	kN	$N_{comb1;c;s;d}$ (min. Compr. or tension)	=	*0*	kN
	$F_{perpend.;s;d}$	=	*0*	kN	$N_{comb2;c;s;d}$ (max. compression)	=	*0*	kN

Angle profile : *H120/120/11* (*1)

h	=	*120*	mm	I_y	=	*3406399*	mm^4
b	=	*120*	mm	$W_{y;el;eff.1}$	=	*39406*	mm^3
t_f	=	*11*	mm	$W_{y;el;eff.2}$	=	*101512*	mm^3
y_s	=	*33,6*	mm	i_y	=	*36,6*	mm
A_{bruto}	=	*2537*	mm^2	i_v	=	*23,3*	mm

Material :

Mat. qual. Fe360 / Fe510	=	*Fe360*		Permissible stress $f_{y;d}$	=	*235,0*	N/mm^2

Geometry section and bolts:

$L_{y;cr}$	=	*4465*	mm	No. bolts / end / flange		=	*3*	
$L_{v;cr}$	=	*4465*	mm	Type of bolts	M / "	=	*24*	
$L_{tot\ (with\ comb.\ buckling)}$	=	*0*	mm	End distance bolt	e1	=	*50*	mm
$a*L_{tot\ (with\ comb.\ buckling)}$	=	*0*	mm	Centre-centre spacing bolt	s1	=	*90*	mm
$L_{perpendicular\ force}$	=	*0*	mm	Edge distance bolt	e2	=	*45*	mm
Position perpendicular force	=	*1*	(⌉=1, ⌋=2)	Boltquality	4.6/5.6/8.8/10.9	=	*4,6*	
Column profile?	=	*1*	no=1, yes=2	Rolled screw threads		=	*1*	
Thickness tie plate	=	*12*	mm	Dubble strap joint no=1, yes=2		=	*1*	

Summary checks :

1 - Check tension on member :

$UC_1 = N_{Ed} / N_{t.Rd}$ = **0,41** **< 1**

2 - Check perpendicular force on member :

$UC_2 = M_{Ed} / M_{c.Rd}$ = **n.v.t.** **< 1**

3 - Check of the member slenderness :

$UC_3 = C_{max;buc} / C_{perm}$ = **192** **< 200 or 240**

4 - Check stress in member due to compression without excentricity:

$UC_4 = N_{E;d} / (C_{max;buc} \times N_{b;Rd})$ = **0,67** **< 1**

5 - Check stress in member due to compression with excentricity:

$UC_{5-1} = N_{E;d} / (C_{max;buc} \times N_{b;Rd})$ = **n.v.t.** **< 1**

$UC_{5-2} = N_{E;d} / N_{b;Rd} + k_{yy} \times (M_{y;Ed} + DM_{y;Ed}) / (C_{LT} \times M_{y;Rk})$ = **n.v.t.** **< 1**

6 - Check stress with combined buckling of two sections:

$UC_{5-1} = N_{E;d} / (C_{max;buc} \times N_{b;Rd})$ = **n.v.t.** **< 1**

$UC_{5-2} = N_{E;d} / N_{b;Rd} + k_{yy} \times (M_{y;Ed} + DM_{y;Ed}) / (C_{LT} \times M_{y;Rk})$ = **n.v.t.** **< 1**

7 - Check shear stress boltconnection:

$UC_7 = F_{v;Ed} / F_{v;Rd}$ = **0,75** **< 1**

8 - Check bearing stress boltconnection:

$UC_8 = F_{b;Ed} / F_{b;Rd}$ = **0,42** **< 1**

Remarks:

The maximum increase of stress or totalstress is(*2) : **$U.C_{max}$ = 0,75 = 75%**

(*1) Eventually, with the checks of the stresses, the cross-section reduction method is used according to prEN 1993-1-5

(*2) The total stress or increase of stress has been related to the permissible stress

Revision :	0	A	B	C	D	E	F
Date :	13-mrt-2012						
Name :	J Goddijn						
Checked :	J Boogert						

Order :	14509	**Dossier :**	13.039	**Berekening :**
Project :	Omleiding mast 52 tot 54 en noodmast 74, 150 kv-Lijn Leiden-Zoetermeer			
Part :	Mast 55			

D&C ENGINEERING

Check equal leg angle-members according to Eurocode 3, prEN 1993-1-1 : 2003

File prEN 1993-1-1.revB.xls d.d. 2-32012, JG

Check section: *Vak 10-11-12-15-t_m 21 Boven randen L60x60x6* *M49*

Memberforces : **(Attention! pressure = "-" and tension ="+")**

Compression:	N_{Sd}	=	*0*	kN	***Combined forces diagonal:***			
Tension:	N_{Sd}	=	*60,86*	kN	$N_{comb1;c;s;d}$ (min. Compr. or tension)	=	*0*	kN
	$F_{perpend.;s;d}$	=	*0*	kN	$N_{comb2;c;s;d}$ (max. compression)	=	*0*	kN

Angle profile : *H60/60/6* (*1)

h	=	*60*	mm	I_y	=	*227925*	mm^4
b	=	*60*	mm	$W_{y;el;eff.1}$	=	*5285*	mm^3
t_f	=	*6*	mm	$W_{y;el;eff.2}$	=	*13507*	mm^3
y_s	=	*16,9*	mm	i_y	=	*18,2*	mm
A_{bruto}	=	*691*	mm^2	i_v	=	*11,5*	mm

Material :

Mat. qual. Fe360 / Fe510	=	*Fe360*		Permissible stress $f_{y;d}$	=	*235,0*	N/mm^2

Geometry section and bolts:

$L_{y;cr}$	=	*1213*	mm	No. bolts / end / flange	=	*3*	
$L_{v;cr}$	=	*1213*	mm	Type of bolts M / "	=	*20*	
$L_{tot\ (with\ comb.\ buckling)}$	=	*0*	mm	End distance bolt e1	=	*40*	mm
$a*L_{tot\ (with\ comb.\ buckling)}$	=	*0*	mm	Centre-centre spacing bolt s1	=	*70*	mm
$L_{perpendicular\ force}$	=	*0*	mm	Edge distance bolt e2	=	*30*	mm
Position perpendicular force	=	*1*	(⌉=1, ⌋=2)	Boltquality 4.6/5.6/8.8/10.9	=	*4,6*	
Column profile?	=	*1*	no=1, yes=2	Rolled screw threads	=	*1*	
Thickness tie plate	=	*12*	mm	Dubble strap joint no=1, yes=2	=	*1*	

Summary checks :

1 - Check tension on member :

$UC_1 = N_{Ed} / N_{t.Rd}$ = **0,68** **< 1**

2 - Check perpendicular force on member :

$UC_2 = M_{Ed} / M_{c.Rd}$ = **n.v.t.** **< 1**

3 - Check of the member slenderness :

$UC_3 = C_{max;buc} / C_{perm}$ = **105** **< 200 or 240**

4 - Check stress in member due to compression without excentricity:

$UC_4 = N_{E;d} / (C_{max;buc} \times N_{b;Rd})$ = **0,00** **< 1**

5 - Check stress in member due to compression with excentricity:

$UC_{5-1} = N_{E;d} / (C_{max;buc} \times N_{b;Rd})$ = **n.v.t.** **< 1**

$UC_{5-2} = N_{E;d} / N_{b;Rd} + k_{yy} \times (M_{y;Ed} + DM_{y;Ed}) / (C_{LT} \times M_{y;Rk})$ = **n.v.t.** **< 1**

6 - Check stress with combined buckling of two sections:

$UC_{5-1} = N_{E;d} / (C_{max;buc} \times N_{b;Rd})$ = **n.v.t.** **< 1**

$UC_{5-2} = N_{E;d} / N_{b;Rd} + k_{yy} \times (M_{y;Ed} + DM_{y;Ed}) / (C_{LT} \times M_{y;Rk})$ = **n.v.t.** **< 1**

7 - Check shear stress boltconnection:

$UC_7 = F_{v;Ed} / F_{v;Rd}$ = **0,43** **< 1**

8 - Check bearing stress boltconnection:

$UC_8 = F_{b;Ed} / F_{b;Rd}$ = **0,46** **< 1**

Remarks:

The maximum increase of stress or totalstress is(*2) : **$U.C_{max}$ = 0,68 = 68%**

(*1) Eventually, with the checks of the stresses, the cross-section reduction method is used according to prEN 1993-1-5

(*2) The total stress or increase of stress has been related to the permissible stress

Revision :	0	A	B	C	D	E	F
Date :	13-mrt-2012						
Name :	J Goddijn						
Checked :	J Boogert						

Order :	14509	**Dossier :**	13.039	**Berekening :**
Project :	Omleiding mast 52 tot 54 en noodmast 74, 150 kv-Lijn Leiden-Zoetermeer			
Part :	Mast 55			

D&C ENGINEERING

Check equal leg angle-members according to Eurocode 3, prEN 1993-1-1 : 2003

File prEN 1993-1-1.revB.xls d.d. 2-32012, JG

Check section: *Vak 10-11-12-15-t_m 21 Horiz.-vert. en schuine Knikverkort. L50x50x5*

M50

Memberforces : **(Attention! pressure = "-" and tension ="+")**

Compression:	N_{Sd}	=	*-13,75*	kN	***Combined forces diagonal:***			
Tension:	N_{Sd}	=	*11,11*	kN	$N_{comb1;c;s;d}$ (min. Compr. or tension)	=	*0*	kN
	$F_{perpend.;s;d}$	=	*1,5*	kN	$N_{comb2;c;s;d}$ (max. compression)	=	*0*	kN

Angle profile : *H50/50/5* (*1)

h	=	*50*	mm	I_y	=	*109643*	mm^4
b	=	*50*	mm	$W_{y;el;eff.1}$	=	*3049*	mm^3
t_f	=	*5*	mm	$W_{y;el;eff.2}$	=	*7811*	mm^3
y_s	=	*14,0*	mm	i_y	=	*15,1*	mm
A_{bruto}	=	*480*	mm^2	i_v	=	*9,6*	mm

Material :

Mat. qual. Fe360 / Fe510	=	*Fe360*		Permissible stress $f_{y;d}$	=	*235,0*	N/mm^2

Geometry section and bolts:

$L_{y;cr}$	=	*1993*	mm	No. bolts / end / flange	=	*1*	
$L_{v;cr}$	=	*1993*	mm	Type of bolts M / "	=	*16*	
$L_{tot\ (with\ comb.\ buckling)}$	=	*0*	mm	End distance bolt e1	=	*30*	mm
$a*L_{tot\ (with\ comb.\ buckling)}$	=	*0*	mm	Centre-centre spacing bolt s1	=	*50*	mm
$L_{perpendicular\ force}$	=	*1268*	mm	Edge distance bolt e2	=	*25*	mm
Position perpendicular force	=	*1*	(⌉=1, ⌋=2)	Boltquality 4.6/5.6/8.8/10.9	=	*4,6*	
Column profile?	=	*1*	no=1, yes=2	Rolled screw threads	=	*1*	
Thickness tie plate	=	*5*	mm	Dubble strap joint no=1, yes=2	=	*1*	

Summary checks :

1 - Check tension on member :

$UC_1 = N_{Ed} / N_{t.Rd}$ = **0,24** **< 1**

2 - Check perpendicular force on member :

$UC_2 = M_{Ed} / M_{c.Rd}$ = **0,66** **< 1**

3 - Check of the member slenderness :

$UC_3 = C_{max;buc} / C_{perm}$ = **208** **< 200 or 240**

4 - Check stress in member due to compression without excentricity:

$UC_4 = N_{E;d} / (C_{max;buc} \times N_{b;Rd})$ = **n.v.t.** **< 1**

5 - Check stress in member due to compression with excentricity:

$UC_{5-1} = N_{E;d} / (C_{max;buc} \times N_{b;Rd})$ = **0,70** **< 1**

$UC_{5-2} = N_{E;d} / N_{b;Rd} + k_{yy} \times (M_{y;Ed} + DM_{y;Ed}) / (C_{LT} \times M_{y;Rk})$ = **0,89** **< 1**

6 - Check stress with combined buckling of two sections:

$UC_{5-1} = N_{E;d} / (C_{max;buc} \times N_{b;Rd})$ = **n.v.t.** **< 1**

$UC_{5-2} = N_{E;d} / N_{b;Rd} + k_{yy} \times (M_{y;Ed} + DM_{y;Ed}) / (C_{LT} \times M_{y;Rk})$ = **n.v.t.** **< 1**

7 - Check shear stress boltconnection:

$UC_7 = F_{v;Ed} / F_{v;Rd}$ = **0,46** **< 1**

8 - Check bearing stress boltconnection:

$UC_8 = F_{b;Ed} / F_{b;Rd}$ = **0,40** **< 1**

Remarks:

The maximum increase of stress or totalstress is(*2) : **$U.C_{max}$ = 0,89 = 89%**

(*1) Eventually, with the checks of the stresses, the cross-section reduction method is used according to prEN 1993-1-5

(*2) The total stress or increase of stress has been related to the permissible stress

Revision :	0	A	B	C	D	E	F
Date :	13-mrt-2012						
Name :	J Goddijn						
Checked :	J Boogert						

Order :	14509	**Dossier :**	13.039	**Berekening :**
Project :	Omleiding mast 52 tot 54 en noodmast 74, 150 kv-Lijn Leiden-Zoetermeer			
Part :	Mast 55			

D&C ENGINEERING

Check equal leg angle-members according to Eurocode 3, prEN 1993-1-1 : 2003

File prEN 1993-1-1.revB.xls d.d. 2-32012, JG

Check section: *Vak 10-11-12-15-t_m 21 Schuine verbanden L90x90x9* *M51*

Memberforces : **(Attention! pressure = "-" and tension ="+")**

Compression:	N_{Sd}	=	*-86,31*	kN	***Combined forces diagonal:***			
Tension:	N_{Sd}	=	*97,66*	kN	$N_{comb1;c;s;d}$ (min. Compr. or tension)	=	*0*	kN
	$F_{perpend.;s;d}$	=	*0*	kN	$N_{comb2;c;s;d}$ (max. compression)	=	*0*	kN

Angle profile : *H90/90/9* (*1)

h	=	*90*	mm	I_y	=	*1158332*	mm^4
b	=	*90*	mm	$W_{y;el;eff.1}$	=	*17927*	mm^3
t_f	=	*9*	mm	$W_{y;el;eff.2}$	=	*45626*	mm^3
y_s	=	*25,4*	mm	i_y	=	*27,3*	mm
A_{bruto}	=	*1552*	mm^2	i_v	=	*17,4*	mm

Material :

Mat. qual. Fe360 / Fe510	=	*Fe360*		Permissible stress $f_{y;d}$	=	*235,0*	N/mm^2

Geometry section and bolts:

$L_{y;cr}$	=	*1506*	mm	No. bolts / end / flange	=	*3*	
$L_{v;cr}$	=	*1506*	mm	Type of bolts M / "	=	*24*	
$L_{tot\ (with\ comb.\ buckling)}$	=	*0*	mm	End distance bolt e1	=	*50*	mm
$a*L_{tot\ (with\ comb.\ buckling)}$	=	*0*	mm	Centre-centre spacing bolt s1	=	*100*	mm
$L_{perpendicular\ force}$	=	*0*	mm	Edge distance bolt e2	=	*45*	mm
Position perpendicular force	=	*1*	(⌉=1, ⌋=2)	Boltquality 4.6/5.6/8.8/10.9	=	*4,6*	
Column profile?	=	*1*	no=1, yes=2	Rolled screw threads	=	*1*	
Thickness tie plate	=	*10*	mm	Dubble strap joint no=1, yes=2	=	*1*	

Summary checks :

1 - Check tension on member :

$UC_1 = N_{Ed} / N_{t.Rd}$ = **0,42** **< 1**

2 - Check perpendicular force on member :

$UC_2 = M_{Ed} / M_{c.Rd}$ = **n.v.t.** **< 1**

3 - Check of the member slenderness :

$UC_3 = C_{max;buc} / C_{perm}$ = **87** **< 200 or 240**

4 - Check stress in member due to compression without excentricity:

$UC_4 = N_{E;d} / (C_{max;buc} \times N_{b;Rd})$ = **0,37** **< 1**

5 - Check stress in member due to compression with excentricity:

$UC_{5-1} = N_{E;d} / (C_{max;buc} \times N_{b;Rd})$ = **n.v.t.** **< 1**

$UC_{5-2} = N_{E;d} / N_{b;Rd} + k_{yy} \times (M_{y;Ed} + DM_{y;Ed}) / (C_{LT} \times M_{y;Rk})$ = **n.v.t.** **< 1**

6 - Check stress with combined buckling of two sections:

$UC_{5-1} = N_{E;d} / (C_{max;buc} \times N_{b;Rd})$ = **n.v.t.** **< 1**

$UC_{5-2} = N_{E;d} / N_{b;Rd} + k_{yy} \times (M_{y;Ed} + DM_{y;Ed}) / (C_{LT} \times M_{y;Rk})$ = **n.v.t.** **< 1**

7 - Check shear stress boltconnection:

$UC_7 = F_{v;Ed} / F_{v;Rd}$ = **0,48** **< 1**

8 - Check bearing stress boltconnection:

$UC_8 = F_{b;Ed} / F_{b;Rd}$ = **0,33** **< 1**

Remarks:

The maximum increase of stress or totalstress is(*2) : **$U.C_{max}$ = 0,48 = 48%**

(*1) Eventually, with the checks of the stresses, the cross-section reduction method is used according to prEN 1993-1-5

(*2) The total stress or increase of stress has been related to the permissible stress

Revision :	0	A	B	C	D	E	F
Date :	13-mrt-2012						
Name :	J Goddijn						
Checked :	J Boogert						

Order :	14509	**Dossier :**	13.039	**Berekening :**
Project :	Omleiding mast 52 tot 54 en noodmast 74, 150 kv-Lijn Leiden-Zoetermeer			
Part :	Mast 55			

D&C ENGINEERING

Check equal leg angle-members according to Eurocode 3, prEN 1993-1-1 : 2003

File prEN 1993-1-1.revB.xls d.d. 2-32012, JG

Check section: *Vak 10-11-12-15-t_m 21 Schuine verbanden L100x100x10* *M52*

Memberforces : **(Attention! pressure = "-" and tension ="+")**

Compression:	N_{Sd}	=	*-82,64*	kN	***Combined forces diagonal:***			
Tension:	N_{Sd}	=	*50,97*	kN	$N_{comb1;c;s;d}$ (min. Compr. or tension)	=	*0*	kN
	$F_{perpend.;s;d}$	=	*0*	kN	$N_{comb2;c;s;d}$ (max. compression)	=	*0*	kN

Angle profile : *H100/100/10* (*1)

h	=	*100*	mm	I_y	=	*1766764*	mm^4
b	=	*100*	mm	$W_{y;el;eff.1}$	=	*24615*	mm^3
t_f	=	*10*	mm	$W_{y;el;eff.2}$	=	*62597*	mm^3
y_s	=	*28,2*	mm	i_y	=	*30,4*	mm
A_{bruto}	=	*1915*	mm^2	i_v	=	*19,3*	mm

Material :

Mat. qual. Fe360 / Fe510	=	*Fe360*		Permissible stress $f_{y;d}$	=	*235,0*	N/mm^2

Geometry section and bolts:

$L_{y;cr}$	=	*2819*	mm	No. bolts / end / flange	=	*3*	
$L_{v;cr}$	=	*2819*	mm	Type of bolts M / "	=	*24*	
$L_{tot\ (with\ comb.\ buckling)}$	=	*0*	mm	End distance bolt e1	=	*50*	mm
$a*L_{tot\ (with\ comb.\ buckling)}$	=	*0*	mm	Centre-centre spacing bolt s1	=	*100*	mm
$L_{perpendicular\ force}$	=	*0*	mm	Edge distance bolt e2	=	*45*	mm
Position perpendicular force	=	*1*	(⌉=1, ⌋=2)	Boltquality 4.6/5.6/8.8/10.9	=	*4,6*	
Column profile?	=	*1*	no=1, yes=2	Rolled screw threads	=	*1*	
Thickness tie plate	=	*10*	mm	Dubble strap joint no=1, yes=2	=	*1*	

Summary checks :

1 - Check tension on member :

$UC_1 = N_{Ed} / N_{t.Rd}$ = **0,18** **< 1**

2 - Check perpendicular force on member :

$UC_2 = M_{Ed} / M_{c.Rd}$ = **n.v.t.** **< 1**

3 - Check of the member slenderness :

$UC_3 = C_{max;buc} / C_{perm}$ = **146** **< 200 or 240**

4 - Check stress in member due to compression without excentricity:

$UC_4 = N_{E;d} / (C_{max;buc} \times N_{b;Rd})$ = **0,50** **< 1**

5 - Check stress in member due to compression with excentricity:

$UC_{5-1} = N_{E;d} / (C_{max;buc} \times N_{b;Rd})$ = **n.v.t.** **< 1**

$UC_{5-2} = N_{E;d} / N_{b;Rd} + k_{yy} \times (M_{y;Ed} + DM_{y;Ed}) / (C_{LT} \times M_{y;Rk})$ = **n.v.t.** **< 1**

6 - Check stress with combined buckling of two sections:

$UC_{5-1} = N_{E;d} / (C_{max;buc} \times N_{b;Rd})$ = **n.v.t.** **< 1**

$UC_{5-2} = N_{E;d} / N_{b;Rd} + k_{yy} \times (M_{y;Ed} + DM_{y;Ed}) / (C_{LT} \times M_{y;Rk})$ = **n.v.t.** **< 1**

7 - Check shear stress boltconnection:

$UC_7 = F_{v;Ed} / F_{v;Rd}$ = **0,41** **< 1**

8 - Check bearing stress boltconnection:

$UC_8 = F_{b;Ed} / F_{b;Rd}$ = **0,16** **< 1**

Remarks:

The maximum increase of stress or totalstress is(*2) : **$U.C_{max}$ = 0,50 = 50%**

(*1) Eventually, with the checks of the stresses, the cross-section reduction method is used according to prEN 1993-1-5

(*2) The total stress or increase of stress has been related to the permissible stress

Revision :	0	A	B	C	D	E	F
Date :	13-mrt-2012						
Name :	J Goddijn						
Checked :	J Boogert						

Order :	14509	**Dossier :**	13.039	**Berekening :**
Project :	Omleiding mast 52 tot 54 en noodmast 74, 150 kv-Lijn Leiden-Zoetermeer			
Part :	Mast 55			

D&C ENGINEERING

Check equal leg angle-members according to Eurocode 3, prEN 1993-1-1 : 2003

File prEN 1993-1-1.revB.xls d.d. 2-32012, JG

Check section: *Vak 10-11-12-15-t_m 21 Schuine verbanden L75x75x8* *M53*

Memberforces : **(Attention! pressure = "-" and tension ="+")**

Compression:	N_{Sd}	=	*-24,28*	kN	***Combined forces diagonal:***			
Tension:	N_{Sd}	=	*78,9*	kN	$N_{comb1;c;s;d}$ (min. Compr. or tension)	=	*0*	kN
	$F_{perpend.;s;d}$	=	*0*	kN	$N_{comb2;c;s;d}$ (max. compression)	=	*0*	kN

Angle profile : *H75/75/8* (*1)

h	=	*75*	mm	I_y	=	*588737*	mm^4
b	=	*75*	mm	$W_{y;el;eff.1}$	=	*10964*	mm^3
t_f	=	*8*	mm	$W_{y;el;eff.2}$	=	*27635*	mm^3
y_s	=	*21,3*	mm	i_y	=	*22,7*	mm
A_{bruto}	=	*1147*	mm^2	i_v	=	*14,4*	mm

Material :

Mat. qual. Fe360 / Fe510	=	*Fe360*		Permissible stress $f_{y;d}$	=	*235,0*	N/mm^2

Geometry section and bolts:

$L_{y;cr}$	=	*2819*	mm	No. bolts / end / flange	=	*2*	
$L_{v;cr}$	=	*2819*	mm	Type of bolts M / "	=	*24*	
$L_{tot\ (with\ comb.\ buckling)}$	=	*0*	mm	End distance bolt e1	=	*50*	mm
$a*L_{tot\ (with\ comb.\ buckling)}$	=	*0*	mm	Centre-centre spacing bolt s1	=	*100*	mm
$L_{perpendicular\ force}$	=	*0*	mm	Edge distance bolt e2	=	*45*	mm
Position perpendicular force	=	*1*	(⌉=1, ⌋=2)	Boltquality 4.6/5.6/8.8/10.9	=	*4,6*	
Column profile?	=	*1*	no=1, yes=2	Rolled screw threads	=	*1*	
Thickness tie plate	=	*10*	mm	Dubble strap joint no=1, yes=2	=	*1*	

Summary checks :

1 - Check tension on member :

$UC_1 = N_{Ed} / N_{t.Rd}$ = **0,52** **< 1**

2 - Check perpendicular force on member :

$UC_2 = M_{Ed} / M_{c.Rd}$ = **n.v.t.** **< 1**

3 - Check of the member slenderness :

$UC_3 = C_{max;buc} / C_{perm}$ = **195** **< 200 or 240**

4 - Check stress in member due to compression without excentricity:

$UC_4 = N_{E;d} / (C_{max;buc} \times N_{b;Rd})$ = **0,36** **< 1**

5 - Check stress in member due to compression with excentricity:

$UC_{5-1} = N_{E;d} / (C_{max;buc} \times N_{b;Rd})$ = **n.v.t.** **< 1**

$UC_{5-2} = N_{E;d} / N_{b;Rd} + k_{yy} \times (M_{y;Ed} + DM_{y;Ed}) / (C_{LT} \times M_{y;Rk})$ = **n.v.t.** **< 1**

6 - Check stress with combined buckling of two sections:

$UC_{5-1} = N_{E;d} / (C_{max;buc} \times N_{b;Rd})$ = **n.v.t.** **< 1**

$UC_{5-2} = N_{E;d} / N_{b;Rd} + k_{yy} \times (M_{y;Ed} + DM_{y;Ed}) / (C_{LT} \times M_{y;Rk})$ = **n.v.t.** **< 1**

7 - Check shear stress boltconnection:

$UC_7 = F_{v;Ed} / F_{v;Rd}$ = **0,58** **< 1**

8 - Check bearing stress boltconnection:

$UC_8 = F_{b;Ed} / F_{b;Rd}$ = **0,45** **< 1**

Remarks:

The maximum increase of stress or totalstress is(*2) : **$U.C_{max}$ = 0,58 = 58%**

(*1) Eventually, with the checks of the stresses, the cross-section reduction method is used according to prEN 1993-1-5

(*2) The total stress or increase of stress has been related to the permissible stress

Revision :	0	A	B	C	D	E	F
Date :	13-mrt-2012						
Name :	J Goddijn						
Checked :	J Boogert						

Order :	14509	**Dossier :**	13.039	**Berekening :**
Project :	Omleiding mast 52 tot 54 en noodmast 74, 150 kv-Lijn Leiden-Zoetermeer			
Part :	Mast 55			

Check equal leg angle-members according to Eurocode 3, prEN 1993-1-1 : 2003

File prEN 1993-1-1.revB.xls d.d. 2-32012, JG

Check section: *Vak 10-11-12-15-t_m 21 Horizontale kruizen L60x60x6* *M54*

Memberforces : **(Attention! pressure = "-" and tension ="+")**

Compression:	N_{Sd}	=	*-40,4*	kN	***Combined forces diagonal:***			
Tension:	N_{Sd}	=	*39,76*	kN	$N_{comb1;c;s;d}$ (min. Compr. or tension)	=	*0*	kN
	$F_{perpend.;s;d}$	=	*0*	kN	$N_{comb2;c;s;d}$ (max. compression)	=	*0*	kN

Angle profile : *H60/60/6* (*1)

h	=	*60*	mm	I_y	=	*227925*	mm^4
b	=	*60*	mm	$W_{y;el;eff.1}$	=	*5285*	mm^3
t_f	=	*6*	mm	$W_{y;el;eff.2}$	=	*13507*	mm^3
y_s	=	*16,9*	mm	i_y	=	*18,2*	mm
A_{bruto}	=	*691*	mm^2	i_v	=	*11,5*	mm

Material :

Mat. qual. Fe360 / Fe510	=	*Fe360*		Permissible stress $f_{y;d}$	=	*235,0*	N/mm^2

Geometry section and bolts:

$L_{y;cr}$	=	*3100*	mm	No. bolts / end / flange	=	*2*	
$L_{v;cr}$	=	*1652*	mm	Type of bolts M / "	=	*16*	
L_{tot} (with comb. buckling)	=	*0*	mm	End distance bolt e1	=	*30*	mm
$a*L_{tot}$ (with comb. buckling)	=	*0*	mm	Centre-centre spacing bolt s1	=	*60*	mm
$L_{perpendicular\ force}$	=	*0*	mm	Edge distance bolt e2	=	*25*	mm
Position perpendicular force	=	*1*	(⌉=1, ⌋=2)	Boltquality 4.6/5.6/8.8/10.9	=	*4,6*	
Column profile?	=	*1*	no=1, yes=2	Rolled screw threads	=	*1*	
Thickness tie plate	=	*8*	mm	Dubble strap joint no=1, yes=2	=	*1*	

Summary checks :

1 - Check tension on member :

$UC_1 = N_{Ed} / N_{t.Rd}$ = **0,47** **< 1**

2 - Check perpendicular force on member :

$UC_2 = M_{Ed} / M_{c.Rd}$ = **n.v.t.** **< 1**

3 - Check of the member slenderness :

$UC_3 = C_{max;buc} / C_{perm}$ = **171** **< 200 or 240**

4 - Check stress in member due to compression without excentricity:

$UC_4 = N_{E;d} / (C_{max;buc} \times N_{b;Rd})$ = **0,96** **< 1**

5 - Check stress in member due to compression with excentricity:

$UC_{5-1} = N_{E;d} / (C_{max;buc} \times N_{b;Rd})$ = **n.v.t.** **< 1**

$UC_{5-2} = N_{E;d} / N_{b;Rd} + k_{yy} \times (M_{y;Ed} + DM_{y;Ed}) / (C_{LT} \times M_{y;Rk})$ = **n.v.t.** **< 1**

6 - Check stress with combined buckling of two sections:

$UC_{5-1} = N_{E;d} / (C_{max;buc} \times N_{b;Rd})$ = **n.v.t.** **< 1**

$UC_{5-2} = N_{E;d} / N_{b;Rd} + k_{yy} \times (M_{y;Ed} + DM_{y;Ed}) / (C_{LT} \times M_{y;Rk})$ = **n.v.t.** **< 1**

7 - Check shear stress boltconnection:

$UC_7 = F_{v;Ed} / F_{v;Rd}$ = **0,67** **< 1**

8 - Check bearing stress boltconnection:

$UC_8 = F_{b;Ed} / F_{b;Rd}$ = **0,59** **< 1**

Remarks:

The maximum increase of stress or totalstress is(*2) : **$U.C_{max}$ = 0,96 = 96%**

(*1) Eventually, with the checks of the stresses, the cross-section reduction method is used according to prEN 1993-1-5

(*2) The total stress or increase of stress has been related to the permissible stress

Revision :	0	A	B	C	D	E	F
Date :	13-mrt-2012						
Name :	J Goddijn						
Checked :	J Boogert						

Order :	14509	**Dossier :**	13.039	**Berekening :**
Project :	Omleiding mast 52 tot 54 en noodmast 74, 150 kv-Lijn Leiden-Zoetermeer			
Part :	Mast 55			

D&C ENGINEERING

Check equal leg angle-members according to Eurocode 3, prEN 1993-1-1 : 2003

File prEN 1993-1-1.revB.xls d.d. 2-32012, JG

Check section: *HorVerb1 Staven L150x150x14* *M55*

Memberforces : **(Attention! pressure = "-" and tension ="+")**

Compression:	N_{Sd}	=	*-227,23*	kN	***Combined forces diagonal:***			
Tension:	N_{Sd}	=	*185,17*	kN	$N_{comb1;c;s;d}$ (min. Compr. or tension)	=	*0*	kN
	$F_{perpend.;s;d}$	=	*1,5*	kN	$N_{comb2;c;s;d}$ (max. compression)	=	*0*	kN

Angle profile : *H150/150/14* (*1)

h	=	*150*	mm	I_y	=	*8453963*	mm^4
b	=	*150*	mm	$W_{y;el;eff.1}$	=	*78326*	mm^3
t_f	=	*14*	mm	$W_{y;el;eff.2}$	=	*200966*	mm^3
y_s	=	*42,1*	mm	i_y	=	*45,8*	mm
A_{bruto}	=	*4031*	mm^2	i_v	=	*29,1*	mm

Material :

Mat. qual. Fe360 / Fe510	=	*Fe360*		Permissible stress $f_{y;d}$	=	*235,0*	N/mm^2

Geometry section and bolts:

$L_{y;cr}$	=	*3800*	mm	No. bolts / end / flange		=	*4*	
$L_{v;cr}$	=	*3800*	mm	Type of bolts	M / "	=	*24*	
$L_{tot\ (with\ comb.\ buckling)}$	=	*0*	mm	End distance bolt	e1	=	*50*	mm
$a*L_{tot\ (with\ comb.\ buckling)}$	=	*0*	mm	Centre-centre spacing bolt	s1	=	*90*	mm
$L_{perpendicular\ force}$	=	*3800*	mm	Edge distance bolt	e2	=	*40*	mm
Position perpendicular force	=	*1*	(⌉=1, ⌋=2)	Boltquality	4.6/5.6/8.8/10.9	=	*4,6*	
Column profile?	=	*1*	no=1, yes=2	Rolled screw threads		=	*1*	
Thickness tie plate	=	*12*	mm	Dubble strap joint no=1, yes=2		=	*1*	

Summary checks :

1 - Check tension on member :

$UC_1 = N_{Ed} / N_{t.Rd}$ = **0,30** **< 1**

2 - Check perpendicular force on member :

$UC_2 = M_{Ed} / M_{c.Rd}$ = **0,08** **< 1**

3 - Check of the member slenderness :

$UC_3 = C_{max;buc} / C_{perm}$ = **131** **< 200 or 240**

4 - Check stress in member due to compression without excentricity:

$UC_4 = N_{E;d} / (C_{max;buc} \times N_{b;Rd})$ = **0,58** **< 1**

5 - Check stress in member due to compression with excentricity:

$UC_{5-1} = N_{E;d} / (C_{max;buc} \times N_{b;Rd})$ = **n.v.t.** **< 1**

$UC_{5-2} = N_{E;d} / N_{b;Rd} + k_{yy} \times (M_{y;Ed} + DM_{y;Ed}) / (C_{LT} \times M_{y;Rk})$ = **n.v.t.** **< 1**

6 - Check stress with combined buckling of two sections:

$UC_{5-1} = N_{E;d} / (C_{max;buc} \times N_{b;Rd})$ = **n.v.t.** **< 1**

$UC_{5-2} = N_{E;d} / N_{b;Rd} + k_{yy} \times (M_{y;Ed} + DM_{y;Ed}) / (C_{LT} \times M_{y;Rk})$ = **n.v.t.** **< 1**

7 - Check shear stress boltconnection:

$UC_7 = F_{v;Ed} / F_{v;Rd}$ = **0,84** **< 1**

8 - Check bearing stress boltconnection:

$UC_8 = F_{b;Ed} / F_{b;Rd}$ = **0,35** **< 1**

Remarks:

The maximum increase of stress or totalstress is(*2) : **$U.C_{max}$ = 0,84 = 84%**

(*1) Eventually, with the checks of the stresses, the cross-section reduction method is used according to prEN 1993-1-5

(*2) The total stress or increase of stress has been related to the permissible stress

Revision :	0	A	B	C	D	E	F
Date :	13-mrt-2012						
Name :	J Goddijn						
Checked :	J Boogert						

Order	:	14509	**Dossier :**	13.039	**Berekening :**
Project	:	Omleiding mast 52 tot 54 en noodmast 74, 150 kv-Lijn Leiden-Zoetermeer			
Part	:	Mast 55			

D&C ENGINEERING

Check equal leg angle-members according to Eurocode 3, prEN 1993-1-1 : 2003

File prEN 1993-1-1.revB.xls d.d. 2-32012, JG

Check section: *HorVerb1 Staven L70x70x7* *M56*

Memberforces : **(Attention! pressure = "-" and tension ="+")**

Compression:	N_{Sd}	=	*-10,6*	kN	***Combined forces diagonal:***			
Tension:	N_{Sd}	=	*8,57*	kN	$N_{comb1;c;s;d}$ (min. Compr. or tension)	=	*0*	kN
	$F_{perpend.;s;d}$	=	*1,5*	kN	$N_{comb2;c;s;d}$ (max. compression)	=	*0*	kN

Angle profile : *H70/70/7* (*1)

h	=	*70*	mm	I_y	=	*422977*	mm^4
b	=	*70*	mm	$W_{y;el;eff.1}$	=	*8411*	mm^3
t_f	=	*7*	mm	$W_{y;el;eff.2}$	=	*21457*	mm^3
y_s	=	*19,7*	mm	i_y	=	*21,2*	mm
A_{bruto}	=	*940*	mm^2	i_v	=	*13,5*	mm

Material :

Mat. qual. Fe360 / Fe510	=	*Fe360*		Permissible stress $f_{y;d}$	=	*235,0*	N/mm^2

Geometry section and bolts:

$L_{y;cr}$	=	*5374*	mm	No. bolts / end / flange	=	*2*	
$L_{v;cr}$	=	*5374*	mm	Type of bolts M / "	=	*20*	
$L_{tot\ (with\ comb.\ buckling)}$	=	*0*	mm	End distance bolt e1	=	*35*	mm
$a*L_{tot\ (with\ comb.\ buckling)}$	=	*0*	mm	Centre-centre spacing bolt s1	=	*70*	mm
$L_{perpendicular\ force}$	=	*5374*	mm	Edge distance bolt e2	=	*35*	mm
Position perpendicular force	=	*1*	(⌉=1, ⌋=2)	Boltquality 4.6/5.6/8.8/10.9	=	*4,6*	
Column profile?	=	*1*	no=1, yes=2	Rolled screw threads	=	*1*	
Thickness tie plate	=	*8*	mm	Dubble strap joint no=1, yes=2	=	*1*	

Summary checks :

1 - Check tension on member :

$UC_1 = N_{Ed} / N_{t.Rd}$ = **0,08** **< 1**

2 - Check perpendicular force on member :

$UC_2 = M_{Ed} / M_{c.Rd}$ = **1,02** **> 1 !!**

3 - Check of the member slenderness :

$UC_3 = C_{max;buc} / C_{perm}$ = **398** **< 200 or 240**

4 - Check stress in member due to compression without excentricity:

$UC_4 = N_{E;d} / (C_{max;buc} \times N_{b;Rd})$ = **0,58** **< 1**

5 - Check stress in member due to compression with excentricity:

$UC_{5-1} = N_{E;d} / (C_{max;buc} \times N_{b;Rd})$ = **n.v.t.** **< 1**

$UC_{5-2} = N_{E;d} / N_{b;Rd} + k_{yy} \times (M_{y;Ed} + DM_{y;Ed}) / (C_{LT} \times M_{y;Rk})$ = **n.v.t.** **< 1**

6 - Check stress with combined buckling of two sections:

$UC_{5-1} = N_{E;d} / (C_{max;buc} \times N_{b;Rd})$ = **n.v.t.** **< 1**

$UC_{5-2} = N_{E;d} / N_{b;Rd} + k_{yy} \times (M_{y;Ed} + DM_{y;Ed}) / (C_{LT} \times M_{y;Rk})$ = **n.v.t.** **< 1**

7 - Check shear stress boltconnection:

$UC_7 = F_{v;Ed} / F_{v;Rd}$ = **0,11** **< 1**

8 - Check bearing stress boltconnection:

$UC_8 = F_{b;Ed} / F_{b;Rd}$ = **0,08** **< 1**

Remarks:

The maximum increase of stress or totalstress is(*2) : **$U.C_{max}$ = 1,02 = 102%**

(*1) Eventually, with the checks of the stresses, the cross-section reduction method is used according to prEN 1993-1-5

(*2) The total stress or increase of stress has been related to the permissible stress

Revision :	0	A	B	C	D	E	F
Date :	13-mrt-2012						
Name :	J Goddijn						
Checked :	J Boogert						

Order :	14509	**Dossier :**	13.039	**Berekening :**
Project :	Omleiding mast 52 tot 54 en noodmast 74, 150 kv-Lijn Leiden-Zoetermeer			
Part :	Mast 55			

D&C ENGINEERING

Check equal leg angle-members according to Eurocode 3, prEN 1993-1-1 : 2003

File prEN 1993-1-1.revB.xls d.d. 2-32012, JG

Check section: *HorVerb1 Staven L75x75x8* *M57*

Memberforces : **(Attention! pressure = "-" and tension ="+")**

Compression:	N_{Sd}	=	*-1,81*	kN	***Combined forces diagonal:***			
Tension:	N_{Sd}	=	*1,81*	kN	$N_{comb1;c;s;d}$ (min. Compr. or tension)	=	*0*	kN
	$F_{perpend.;s;d}$	=	*1,5*	kN	$N_{comb2;c;s;d}$ (max. compression)	=	*0*	kN

Angle profile : *H75/75/8* (*1)

h	=	*75*	mm	I_y	=	*588737*	mm^4
b	=	*75*	mm	$W_{y;el;eff.1}$	=	*10964*	mm^3
t_f	=	*8*	mm	$W_{y;el;eff.2}$	=	*27635*	mm^3
y_s	=	*21,3*	mm	i_y	=	*22,7*	mm
A_{bruto}	=	*1147*	mm^2	i_v	=	*14,4*	mm

Material :

Mat. qual. Fe360 / Fe510	=	*Fe360*		Permissible stress $f_{y;d}$	=	*235,0*	N/mm^2

Geometry section and bolts:

$L_{y;cr}$	=	*3800*	mm	No. bolts / end / flange		=	*1*	
$L_{v;cr}$	=	*3800*	mm	Type of bolts	M / "	=	*16*	
$L_{tot\ (with\ comb.\ buckling)}$	=	*0*	mm	End distance bolt	e1	=	*30*	mm
$a*L_{tot\ (with\ comb.\ buckling)}$	=	*0*	mm	Centre-centre spacing bolt	s1	=	*50*	mm
$L_{perpendicular\ force}$	=	*7600*	mm	Edge distance bolt	e2	=	*40*	mm
Position perpendicular force	=	*1*	(⌉=1, ⌋=2)	Boltquality	4.6/5.6/8.8/10.9	=	*4,6*	
Column profile?	=	*1*	no=1, yes=2	Rolled screw threads		=	*1*	
Thickness tie plate	=	*8*	mm	Dubble strap joint no=1, yes=2		=	*1*	

Summary checks :

1 - Check tension on member :

$UC_1 = N_{Ed} / N_{t.Rd}$ = **0,01** **< 1**

2 - Check perpendicular force on member :

$UC_2 = M_{Ed} / M_{c.Rd}$ = **1,11** **> 1 !!**

3 - Check of the member slenderness :

$UC_3 = C_{max;buc} / C_{perm}$ = **263** **< 200 or 240**

4 - Check stress in member due to compression without excentricity:

$UC_4 = N_{E;d} / (C_{max;buc} \times N_{b;Rd})$ = **n.v.t.** **< 1**

5 - Check stress in member due to compression with excentricity:

$UC_{5-1} = N_{E;d} / (C_{max;buc} \times N_{b;Rd})$ = **0,06** **< 1**

$UC_{5-2} = N_{E;d} / N_{b;Rd} + k_{yy} \times (M_{y;Ed} + DM_{y;Ed}) / (C_{LT} \times M_{y;Rk})$ = **0,07** **< 1**

6 - Check stress with combined buckling of two sections:

$UC_{5-1} = N_{E;d} / (C_{max;buc} \times N_{b;Rd})$ = **n.v.t.** **< 1**

$UC_{5-2} = N_{E;d} / N_{b;Rd} + k_{yy} \times (M_{y;Ed} + DM_{y;Ed}) / (C_{LT} \times M_{y;Rk})$ = **n.v.t.** **< 1**

7 - Check shear stress boltconnection:

$UC_7 = F_{v;Ed} / F_{v;Rd}$ = **0,06** **< 1**

8 - Check bearing stress boltconnection:

$UC_8 = F_{b;Ed} / F_{b;Rd}$ = **0,04** **< 1**

Remarks:

The maximum increase of stress or totalstress is(*2) : **$U.C_{max}$ = 1,11 = 111%**

(*1) Eventually, with the checks of the stresses, the cross-section reduction method is used according to prEN 1993-1-5

(*2) The total stress or increase of stress has been related to the permissible stress

Revision :	0	A	B	C	D	E	F
Date :	13-mrt-2012						
Name :	J Goddijn						
Checked :	J Boogert						

Order :	14509	**Dossier :**	13.039	**Berekening :**
Project :	Omleiding mast 52 tot 54 en noodmast 74, 150 kv-Lijn Leiden-Zoetermeer			
Part :	Mast 55			

D&C ENGINEERING

Check equal leg angle-members according to Eurocode 3, prEN 1993-1-1 : 2003

File prEN 1993-1-1.revB.xls d.d. 2-32012, JG

Check section: *HorVerb2 Staven L65x65x7* *M58*

Memberforces : **(Attention! pressure = "-" and tension ="+")**

Compression:	N_{Sd}	=	*0*	kN	***Combined forces diagonal:***			
Tension:	N_{Sd}	=	*0*	kN	$N_{comb1;c;s;d}$ (min. Compr. or tension)	=	*0*	kN
	$F_{perpend.;s;d}$	=	*1,5*	kN	$N_{comb2;c;s;d}$ (max. compression)	=	*0*	kN

Angle profile : *H65/65/7* (*1)

h	=	*65*	mm	I_y	=	*334319*	mm^4
b	=	*65*	mm	$W_{y;el;eff.1}$	=	*7185*	mm^3
t_f	=	*7*	mm	$W_{y;el;eff.2}$	=	*18103*	mm^3
y_s	=	*18,5*	mm	i_y	=	*19,6*	mm
A_{bruto}	=	*870*	mm^2	i_v	=	*12,5*	mm

Material :

Mat. qual. Fe360 / Fe510	=	*Fe360*		Permissible stress $f_{y;d}$	=	*235,0*	N/mm^2

Geometry section and bolts:

$L_{y;cr}$	=	*3353*	mm	No. bolts / end / flange	=	*1*	
$L_{v;cr}$	=	*3353*	mm	Type of bolts M / "	=	*16*	
L_{tot} (with comb. buckling)	=	*0*	mm	End distance bolt e1	=	*30*	mm
$a*L_{tot}$ (with comb. buckling)	=	*0*	mm	Centre-centre spacing bolt s1	=	*50*	mm
$L_{perpendicular\ force}$	=	*3353*	mm	Edge distance bolt e2	=	*30*	mm
Position perpendicular force	=	*1*	(⌉=1, ⌋=2)	Boltquality 4.6/5.6/8.8/10.9	=	*4,6*	
Column profile?	=	*1*	no=1, yes=2	Rolled screw threads	=	*1*	
Thickness tie plate	=	*7*	mm	Dubble strap joint no=1, yes=2	=	*1*	

Summary checks :

1 - Check tension on member :

$UC_1 = N_{Ed} / N_{t.Rd}$ = **0,00** **< 1**

2 - Check perpendicular force on member :

$UC_2 = M_{Ed} / M_{c.Rd}$ = **0,74** **< 1**

3 - Check of the member slenderness :

$UC_3 = C_{max;buc} / C_{perm}$ = **269** **< 200 or 240**

4 - Check stress in member due to compression without excentricity:

$UC_4 = N_{E;d} / (C_{max;buc} \times N_{b;Rd})$ = **n.v.t.** **< 1**

5 - Check stress in member due to compression with excentricity:

$UC_{5-1} = N_{E;d} / (C_{max;buc} \times N_{b;Rd})$ = **0,00** **< 1**

$UC_{5-2} = N_{E;d} / N_{b;Rd} + k_{yy} \times (M_{y;Ed} + DM_{y;Ed}) / (C_{LT} \times M_{y;Rk})$ = **0,00** **< 1**

6 - Check stress with combined buckling of two sections:

$UC_{5-1} = N_{E;d} / (C_{max;buc} \times N_{b;Rd})$ = **n.v.t.** **< 1**

$UC_{5-2} = N_{E;d} / N_{b;Rd} + k_{yy} \times (M_{y;Ed} + DM_{y;Ed}) / (C_{LT} \times M_{y;Rk})$ = **n.v.t.** **< 1**

7 - Check shear stress boltconnection:

$UC_7 = F_{v;Ed} / F_{v;Rd}$ = **0,00** **< 1**

8 - Check bearing stress boltconnection:

$UC_8 = F_{b;Ed} / F_{b;Rd}$ = **0,00** **< 1**

Remarks:

The maximum increase of stress or totalstress is(*2) : **$U.C_{max}$ = 0,74 = 74%**

(*1) Eventually, with the checks of the stresses, the cross-section reduction method is used according to prEN 1993-1-5

(*2) The total stress or increase of stress has been related to the permissible stress

Revision :	0	A	B	C	D	E	F
Date :	13-mrt-2012						
Name :	J Goddijn						
Checked :	J Boogert						

Order :	14509	**Dossier :**	13.039	**Berekening :**
Project :	Omleiding mast 52 tot 54 en noodmast 74, 150 kv-Lijn Leiden-Zoetermeer			
Part :	Mast 55			

D&C ENGINEERING

Check equal leg angle-members according to Eurocode 3, prEN 1993-1-1 : 2003

File prEN 1993-1-1.revB.xls d.d. 2-32012, JG

Check section: *HorVerb2 Staven L70x70x7* *M59*

Memberforces : **(Attention! pressure = "-" and tension ="+")**

Compression:	N_{Sd}	=	*-18,02*	kN	***Combined forces diagonal:***			
Tension:	N_{Sd}	=	*17,77*	kN	$N_{comb1;c;s;d}$ (min. Compr. or tension)	=	*0*	kN
	$F_{perpend.;s;d}$	=	*1,5*	kN	$N_{comb2;c;s;d}$ (max. compression)	=	*0*	kN

Angle profile : *H70/70/7* (*1)

h	=	*70*	mm	I_y	=	*422977*	mm^4
b	=	*70*	mm	$W_{y;el;eff.1}$	=	*8411*	mm^3
t_f	=	*7*	mm	$W_{y;el;eff.2}$	=	*21457*	mm^3
y_s	=	*19,7*	mm	i_y	=	*21,2*	mm
A_{bruto}	=	*940*	mm^2	i_v	=	*13,5*	mm

Material :

Mat. qual. Fe360 / Fe510	=	*Fe360*		Permissible stress $f_{y;d}$	=	*235,0*	N/mm^2

Geometry section and bolts:

$L_{y;cr}$	=	*4741*	mm	No. bolts / end / flange	=	*2*	
$L_{v;cr}$	=	*4741*	mm	Type of bolts M / "	=	*20*	
$L_{tot\ (with\ comb.\ buckling)}$	=	*0*	mm	End distance bolt e1	=	*35*	mm
$a*L_{tot\ (with\ comb.\ buckling)}$	=	*0*	mm	Centre-centre spacing bolt s1	=	*70*	mm
$L_{perpendicular\ force}$	=	*4741*	mm	Edge distance bolt e2	=	*35*	mm
Position perpendicular force	=	*1*	(⌉=1, ⌋=2)	Boltquality 4.6/5.6/8.8/10.9	=	*4,6*	
Column profile?	=	*1*	no=1, yes=2	Rolled screw threads	=	*1*	
Thickness tie plate	=	*8*	mm	Dubble strap joint no=1, yes=2	=	*1*	

Summary checks :

1 - Check tension on member :

$UC_1 = N_{Ed} / N_{t.Rd}$ = **0,16** **< 1**

2 - Check perpendicular force on member :

$UC_2 = M_{Ed} / M_{c.Rd}$ = **0,90** **< 1**

3 - Check of the member slenderness :

$UC_3 = C_{max;buc} / C_{perm}$ = **351** **< 200 or 240**

4 - Check stress in member due to compression without excentricity:

$UC_4 = N_{E;d} / (C_{max;buc} \times N_{b;Rd})$ = **0,80** **< 1**

5 - Check stress in member due to compression with excentricity:

$UC_{5-1} = N_{E;d} / (C_{max;buc} \times N_{b;Rd})$ = **n.v.t.** **< 1**

$UC_{5-2} = N_{E;d} / N_{b;Rd} + k_{yy} \times (M_{y;Ed} + DM_{y;Ed}) / (C_{LT} \times M_{y;Rk})$ = **n.v.t.** **< 1**

6 - Check stress with combined buckling of two sections:

$UC_{5-1} = N_{E;d} / (C_{max;buc} \times N_{b;Rd})$ = **n.v.t.** **< 1**

$UC_{5-2} = N_{E;d} / N_{b;Rd} + k_{yy} \times (M_{y;Ed} + DM_{y;Ed}) / (C_{LT} \times M_{y;Rk})$ = **n.v.t.** **< 1**

7 - Check shear stress boltconnection:

$UC_7 = F_{v;Ed} / F_{v;Rd}$ = **0,19** **< 1**

8 - Check bearing stress boltconnection:

$UC_8 = F_{b;Ed} / F_{b;Rd}$ = **0,17** **< 1**

Remarks:

The maximum increase of stress or totalstress is(*2) : **$U.C_{max}$ = 0,90 = 90%**

(*1) Eventually, with the checks of the stresses, the cross-section reduction method is used according to prEN 1993-1-5

(*2) The total stress or increase of stress has been related to the permissible stress

Revision :	0	A	B	C	D	E	F
Date :	13-mrt-2012						
Name :	J Goddijn						
Checked :	J Boogert						

Order	:	14509	**Dossier :**	13.039	**Berekening :**
Project	:	Omleiding mast 52 tot 54 en noodmast 74, 150 kv-Lijn Leiden-Zoetermeer			
Part	:	Mast 55			

D&C ENGINEERING

Check equal leg angle-members according to Eurocode 3, prEN 1993-1-1 : 2003

File prEN 1993-1-1.revB.xls d.d. 2-32012, JG

Check section: *HorVerb2 Staven L60x60x6* *M60*

Memberforces : **(Attention! pressure = "-" and tension ="+")**

Compression:	N_{Sd}	=	*-0,27*	kN	***Combined forces diagonal:***			
Tension:	N_{Sd}	=	*0,08*	kN	$N_{comb1;c;s;d}$ (min. Compr. or tension)	=	*0*	kN
	$F_{perpend.;s;d}$	=	*1,5*	kN	$N_{comb2;c;s;d}$ (max. compression)	=	*0*	kN

Angle profile : *H60/60/6* (*1)

h	=	*60*	mm	I_y	=	*227925*	mm^4
b	=	*60*	mm	$W_{y;el;eff.1}$	=	*5285*	mm^3
t_f	=	*6*	mm	$W_{y;el;eff.2}$	=	*13507*	mm^3
y_s	=	*16,9*	mm	i_y	=	*18,2*	mm
A_{bruto}	=	*691*	mm^2	i_v	=	*11,5*	mm

Material :

Mat. qual. Fe360 / Fe510	=	*Fe360*		Permissible stress $f_{y;d}$	=	*235,0*	N/mm^2

Geometry section and bolts:

$L_{y;cr}$	=	*3353*	mm	No. bolts / end / flange		=	*4*	
$L_{v;cr}$	=	*3353*	mm	Type of bolts	M / "	=	*24*	
$L_{tot\ (with\ comb.\ buckling)}$	=	*0*	mm	End distance bolt	e1	=	*50*	mm
$a*L_{tot\ (with\ comb.\ buckling)}$	=	*0*	mm	Centre-centre spacing bolt	s1	=	*90*	mm
$L_{perpendicular\ force}$	=	*6707*	mm	Edge distance bolt	e2	=	*40*	mm
Position perpendicular force	=	*1*	(⌉=1, ⌋=2)	Boltquality	4.6/5.6/8.8/10.9	=	*4,6*	
Column profile?	=	*1*	no=1, yes=2	Rolled screw threads		=	*1*	
Thickness tie plate	=	*12*	mm	Dubble strap joint no=1, yes=2		=	*1*	

Summary checks :

1 - Check tension on member :

$UC_1 = N_{Ed} / N_{t.Rd}$ = **0,00** **< 1**

2 - Check perpendicular force on member :

$UC_2 = M_{Ed} / M_{c.Rd}$ = **2,03** **> 1 !!**

3 - Check of the member slenderness :

$UC_3 = C_{max;buc} / C_{perm}$ = **290** **< 200 or 240**

4 - Check stress in member due to compression without excentricity:

$UC_4 = N_{E;d} / (C_{max;buc} \times N_{b;Rd})$ = **0,01** **< 1**

5 - Check stress in member due to compression with excentricity:

$UC_{5-1} = N_{E;d} / (C_{max;buc} \times N_{b;Rd})$ = **n.v.t.** **< 1**

$UC_{5-2} = N_{E;d} / N_{b;Rd} + k_{yy} \times (M_{y;Ed} + DM_{y;Ed}) / (C_{LT} \times M_{y;Rk})$ = **n.v.t.** **< 1**

6 - Check stress with combined buckling of two sections:

$UC_{5-1} = N_{E;d} / (C_{max;buc} \times N_{b;Rd})$ = **n.v.t.** **< 1**

$UC_{5-2} = N_{E;d} / N_{b;Rd} + k_{yy} \times (M_{y;Ed} + DM_{y;Ed}) / (C_{LT} \times M_{y;Rk})$ = **n.v.t.** **< 1**

7 - Check shear stress boltconnection:

$UC_7 = F_{v;Ed} / F_{v;Rd}$ = **0,00** **< 1**

8 - Check bearing stress boltconnection:

$UC_8 = F_{b;Ed} / F_{b;Rd}$ = **0,00** **< 1**

Remarks:

The maximum increase of stress or totalstress is(*2) : **$U.C_{max}$ = 2,03 = 203%**

(*1) Eventually, with the checks of the stresses, the cross-section reduction method is used according to prEN 1993-1-5

(*2) The total stress or increase of stress has been related to the permissible stress

Revision :	0	A	B	C	D	E	F
Date :	13-mrt-2012						
Name :	J Goddijn						
Checked :	J Boogert						

Order :	14509	**Dossier :**	13.039	**Berekening :**
Project :	Omleiding mast 52 tot 54 en noodmast 74, 150 kv-Lijn Leiden-Zoetermeer			
Part :	Mast 55			

D&C ENGINEERING

Check equal leg angle-members according to Eurocode 3, prEN 1993-1-1 : 2003

File prEN 1993-1-1.revB.xls d.d. 2-32012, JG

Check section: *HorVerb3 Staven L150x150x14* *M61*

Memberforces : **(Attention! pressure = "-" and tension ="+")**

Compression:	N_{Sd}	=	-355,69	kN	***Combined forces diagonal:***			
Tension:	N_{Sd}	=	292	kN	$N_{comb1;c;s;d}$ (min. Compr. or tension)	=	0	kN
	$F_{perpend.;s;d}$	=	1,5	kN	$N_{comb2;c;s;d}$ (max. compression)	=	0	kN

Angle profile : *H150/150/14* (*1)

h	=	150	mm	I_y	=	8453963	mm^4
b	=	150	mm	$W_{y;el;eff.1}$	=	78326	mm^3
t_f	=	14	mm	$W_{y;el;eff.2}$	=	200966	mm^3
y_s	=	42,1	mm	i_y	=	45,8	mm
A_{bruto}	=	4031	mm^2	i_v	=	29,1	mm

Material :

Mat. qual. Fe360 / Fe510	=	Fe360		Permissible stress $f_{y;d}$	=	235,0	N/mm^2

Geometry section and bolts:

$L_{y;cr}$	=	2500	mm	No. bolts / end / flange	=	4	
$L_{v;cr}$	=	2500	mm	Type of bolts M / "	=	30	
$L_{tot\ (with\ comb.\ buckling)}$	=	0	mm	End distance bolt e1	=	60	mm
$a*L_{tot\ (with\ comb.\ buckling)}$	=	0	mm	Centre-centre spacing bolt s1	=	110	mm
$L_{perpendicular\ force}$	=	2500	mm	Edge distance bolt e2	=	40	mm
Position perpendicular force	=	1	(⌉=1, ⌋=2)	Boltquality 4.6/5.6/8.8/10.9	=	4,6	
Column profile?	=	1	no=1, yes=2	Rolled screw threads	=	1	
Thickness tie plate	=	16	mm	Dubble strap joint no=1, yes=2	=	1	

Summary checks :

1 - Check tension on member :

$UC_1 = N_{Ed} / N_{t.Rd}$ = **0,50** **< 1**

2 - Check perpendicular force on member :

$UC_2 = M_{Ed} / M_{c.Rd}$ = **0,05** **< 1**

3 - Check of the member slenderness :

$UC_3 = C_{max;buc} / C_{perm}$ = **86** **< 200 or 240**

4 - Check stress in member due to compression without excentricity:

$UC_4 = N_{E;d} / (C_{max;buc} \times N_{b;Rd})$ = **0,58** **< 1**

5 - Check stress in member due to compression with excentricity:

$UC_{5-1} = N_{E;d} / (C_{max;buc} \times N_{b;Rd})$ = **n.v.t.** **< 1**

$UC_{5-2} = N_{E;d} / N_{b;Rd} + k_{yy} \times (M_{y;Ed} + DM_{y;Ed}) / (C_{LT} \times M_{y;Rk})$ = **n.v.t.** **< 1**

6 - Check stress with combined buckling of two sections:

$UC_{5-1} = N_{E;d} / (C_{max;buc} \times N_{b;Rd})$ = **n.v.t.** **< 1**

$UC_{5-2} = N_{E;d} / N_{b;Rd} + k_{yy} \times (M_{y;Ed} + DM_{y;Ed}) / (C_{LT} \times M_{y;Rk})$ = **n.v.t.** **< 1**

7 - Check shear stress boltconnection:

$UC_7 = F_{v;Ed} / F_{v;Rd}$ = **0,83** **< 1**

8 - Check bearing stress boltconnection:

$UC_8 = F_{b;Ed} / F_{b;Rd}$ = **0,59** **< 1**

Remarks:

The maximum increase of stress or totalstress is(*2) : **$U.C_{max}$ = 0,83 = 83%**

(*1) Eventually, with the checks of the stresses, the cross-section reduction method is used according to prEN 1993-1-5

(*2) The total stress or increase of stress has been related to the permissible stress

Revision :	0	A	B	C	D	E	F
Date :	13-mrt-2012						
Name :	J Goddijn						
Checked :	J Boogert						

Order :	14509	**Dossier :**	13.039	**Berekening :**
Project :	Omleiding mast 52 tot 54 en noodmast 74, 150 kv-Lijn Leiden-Zoetermeer			
Part :	Mast 55			

D&C ENGINEERING

Check equal leg angle-members according to Eurocode 3, prEN 1993-1-1 : 2003

File prEN 1993-1-1.revB.xls d.d. 2-32012, JG

Check section: *HorVerb3 Staven L90x90x9* *M62*

Memberforces : **(Attention! pressure = "-" and tension ="+")**

Compression:	N_{Sd}	=	*-50,62*	kN	***Combined forces diagonal:***			
Tension:	N_{Sd}	=	*49,64*	kN	$N_{comb1;c;s;d}$ (min. Compr. or tension)	=	*0*	kN
	$F_{perpend.;s;d}$	=	*1,5*	kN	$N_{comb2;c;s;d}$ (max. compression)	=	*0*	kN

Angle profile : *H90/90/9* (*1)

h	=	*90*	mm	I_y	=	*1158332*	mm^4
b	=	*90*	mm	$W_{y;el;eff.1}$	=	*17927*	mm^3
t_f	=	*9*	mm	$W_{y;el;eff.2}$	=	*45626*	mm^3
y_s	=	*25,4*	mm	i_y	=	*27,3*	mm
A_{bruto}	=	*1552*	mm^2	i_v	=	*17,4*	mm

Material :

Mat. qual. Fe360 / Fe510	=	*Fe360*		Permissible stress $f_{y;d}$	=	*235,0*	N/mm^2

Geometry section and bolts:

$L_{y;cr}$	=	*3536*	mm	No. bolts / end / flange	=	*1*	
$L_{v;cr}$	=	*3536*	mm	Type of bolts M / "	=	*20*	
$L_{tot\ (with\ comb.\ buckling)}$	=	*0*	mm	End distance bolt e1	=	*35*	mm
$a*L_{tot\ (with\ comb.\ buckling)}$	=	*0*	mm	Centre-centre spacing bolt s1	=	*70*	mm
$L_{perpendicular\ force}$	=	*3536*	mm	Edge distance bolt e2	=	*35*	mm
Position perpendicular force	=	*1*	(⌉=1, ⌋=2)	Boltquality 4.6/5.6/8.8/10.9	=	*4,6*	
Column profile?	=	*1*	no=1, yes=2	Rolled screw threads	=	*1*	
Thickness tie plate	=	*10*	mm	Dubble strap joint no=1, yes=2	=	*1*	

Summary checks :

1 - Check tension on member :

$UC_1 = N_{Ed} / N_{t.Rd}$ = **0,40** **< 1**

2 - Check perpendicular force on member :

$UC_2 = M_{Ed} / M_{c.Rd}$ = **0,31** **< 1**

3 - Check of the member slenderness :

$UC_3 = C_{max;buc} / C_{perm}$ = **203** **< 200 or 240**

4 - Check stress in member due to compression without excentricity:

$UC_4 = N_{E;d} / (C_{max;buc} \times N_{b;Rd})$ = **n.v.t.** **< 1**

5 - Check stress in member due to compression with excentricity:

$UC_{5-1} = N_{E;d} / (C_{max;buc} \times N_{b;Rd})$ = **0,76** **< 1**

$UC_{5-2} = N_{E;d} / N_{b;Rd} + k_{yy} \times (M_{y;Ed} + DM_{y;Ed}) / (C_{LT} \times M_{y;Rk})$ = **0,99** **< 1**

6 - Check stress with combined buckling of two sections:

$UC_{5-1} = N_{E;d} / (C_{max;buc} \times N_{b;Rd})$ = **n.v.t.** **< 1**

$UC_{5-2} = N_{E;d} / N_{b;Rd} + k_{yy} \times (M_{y;Ed} + DM_{y;Ed}) / (C_{LT} \times M_{y;Rk})$ = **n.v.t.** **< 1**

7 - Check shear stress boltconnection:

$UC_7 = F_{v;Ed} / F_{v;Rd}$ = **1,08** **> 1 !!**

8 - Check bearing stress boltconnection:

$UC_8 = F_{b;Ed} / F_{b;Rd}$ = **0,72** **< 1**

Remarks:

The maximum increase of stress or totalstress is(*2) : **$U.C_{max}$ = 1,08 = 108%**

(*1) Eventually, with the checks of the stresses, the cross-section reduction method is used according to prEN 1993-1-5

(*2) The total stress or increase of stress has been related to the permissible stress

Revision :	0	A	B	C	D	E	F
Date :	13-mrt-2012						
Name :	J Goddijn						
Checked :	J Boogert						

Order	:	14509	**Dossier :**	13.039	**Berekening :**
Project	:	Omleiding mast 52 tot 54 en noodmast 74, 150 kv-Lijn Leiden-Zoetermeer			
Part	:	Mast 55			

D&C ENGINEERING

Check equal leg angle-members according to Eurocode 3, prEN 1993-1-1 : 2003

File prEN 1993-1-1.revB.xls d.d. 2-32012, JG

Check section: *HorVerb3 Staven L75x75x8* *M63*

Memberforces : **(Attention! pressure = "-" and tension ="+")**

Compression:	N_{Sd}	=	*-0,09*	kN	***Combined forces diagonal:***			
Tension:	N_{Sd}	=	*0,59*	kN	$N_{comb1;c;s;d}$ (min. Compr. or tension)	=	*0*	kN
	$F_{perpend.;s;d}$	=	*1,5*	kN	$N_{comb2;c;s;d}$ (max. compression)	=	*0*	kN

Angle profile : *H75/75/8* (*1)

h	=	*75*	mm	I_y	=	*588737*	mm^4
b	=	*75*	mm	$W_{y;el;eff.1}$	=	*10964*	mm^3
t_f	=	*8*	mm	$W_{y;el;eff.2}$	=	*27635*	mm^3
y_s	=	*21,3*	mm	i_y	=	*22,7*	mm
A_{bruto}	=	*1147*	mm^2	i_v	=	*14,4*	mm

Material :

Mat. qual. Fe360 / Fe510	=	*Fe360*		Permissible stress $f_{y;d}$	=	*235,0*	N/mm^2

Geometry section and bolts:

$L_{y;cr}$	=	*5000*	mm	No. bolts / end / flange	=	*1*	
$L_{v;cr}$	=	*5000*	mm	Type of bolts M / "	=	*16*	
L_{tot} (with comb. buckling)	=	*0*	mm	End distance bolt e1	=	*30*	mm
$a*L_{tot}$ (with comb. buckling)	=	*0*	mm	Centre-centre spacing bolt s1	=	*50*	mm
$L_{perpendicular\ force}$	=	*5000*	mm	Edge distance bolt e2	=	*40*	mm
Position perpendicular force	=	*1*	(⌉=1, ⌋=2)	Boltquality 4.6/5.6/8.8/10.9	=	*4,6*	
Column profile?	=	*1*	no=1, yes=2	Rolled screw threads	=	*1*	
Thickness tie plate	=	*8*	mm	Dubble strap joint no=1, yes=2	=	*1*	

Summary checks :

1 - Check tension on member :

$UC_1 = N_{Ed} / N_{t.Rd}$ = **0,00** **< 1**

2 - Check perpendicular force on member :

$UC_2 = M_{Ed} / M_{c.Rd}$ = **0,73** **< 1**

3 - Check of the member slenderness :

$UC_3 = C_{max;buc} / C_{perm}$ = **347** **< 200 or 240**

4 - Check stress in member due to compression without excentricity:

$UC_4 = N_{E;d} / (C_{max;buc} \times N_{b;Rd})$ = **n.v.t.** **< 1**

5 - Check stress in member due to compression with excentricity:

$UC_{5-1} = N_{E;d} / (C_{max;buc} \times N_{b;Rd})$ = **0,00** **< 1**

$UC_{5-2} = N_{E;d} / N_{b;Rd} + k_{yy} \times (M_{y;Ed} + DM_{y;Ed}) / (C_{LT} \times M_{y;Rk})$ = **0,01** **< 1**

6 - Check stress with combined buckling of two sections:

$UC_{5-1} = N_{E;d} / (C_{max;buc} \times N_{b;Rd})$ = **n.v.t.** **< 1**

$UC_{5-2} = N_{E;d} / N_{b;Rd} + k_{yy} \times (M_{y;Ed} + DM_{y;Ed}) / (C_{LT} \times M_{y;Rk})$ = **n.v.t.** **< 1**

7 - Check shear stress boltconnection:

$UC_7 = F_{v;Ed} / F_{v;Rd}$ = **0,02** **< 1**

8 - Check bearing stress boltconnection:

$UC_8 = F_{b;Ed} / F_{b;Rd}$ = **0,01** **< 1**

Remarks:

The maximum increase of stress or totalstress is(*2) : **$U.C_{max}$ = 0,73 = 73%**

(*1) Eventually, with the checks of the stresses, the cross-section reduction method is used according to prEN 1993-1-5

(*2) The total stress or increase of stress has been related to the permissible stress

Revision :	0	A	B	C	D	E	F
Date :	13-mrt-2012						
Name :	J Goddijn						
Checked :	J Boogert						

Order :	14509	**Dossier :**	13.039	**Berekening :**
Project :	Omleiding mast 52 tot 54 en noodmast 74, 150 kv-Lijn Leiden-Zoetermeer			
Part :	Mast 55			

D&C ENGINEERING

Check equal leg angle-members according to Eurocode 3, prEN 1993-1-1 : 2003

File prEN 1993-1-1.revB.xls d.d. 2-32012, JG

Check section: *CrossArm 1-2 Bovern Randen* *M64*

Memberforces : **(Attention! pressure = "-" and tension ="+")**

Compression:	N_{Sd}	=	*0*	kN	***Combined forces diagonal:***			
Tension:	N_{Sd}	=	*85,65*	kN	$N_{comb1;c;s;d}$ (min. Compr. or tension)	=	*0*	kN
	$F_{perpend.;s;d}$	=	*0*	kN	$N_{comb2;c;s;d}$ (max. compression)	=	*0*	kN

Angle profile : *H100/100/10* (*1)

h	=	*100*	mm	I_y	=	*1766764*	mm^4
b	=	*100*	mm	$W_{y;el;eff.1}$	=	*24615*	mm^3
t_f	=	*10*	mm	$W_{y;el;eff.2}$	=	*62597*	mm^3
y_s	=	*28,2*	mm	i_y	=	*30,4*	mm
A_{bruto}	=	*1915*	mm^2	i_v	=	*19,3*	mm

Material :

Mat. qual. Fe360 / Fe510	=	*Fe360*		Permissible stress $f_{y;d}$	=	*235,0*	N/mm^2

Geometry section and bolts:

$L_{y;cr}$	=	*4732*	mm	No. bolts / end / flange	=	*3*	
$L_{v;cr}$	=	*4732*	mm	Type of bolts M / "	=	*24*	
$L_{tot\ (with\ comb.\ buckling)}$	=	*0*	mm	End distance bolt e1	=	*50*	mm
$a*L_{tot\ (with\ comb.\ buckling)}$	=	*0*	mm	Centre-centre spacing bolt s1	=	*100*	mm
$L_{perpendicular\ force}$	=	*0*	mm	Edge distance bolt e2	=	*45*	mm
Position perpendicular force	=	*1*	(⌉=1, ⌋=2)	Boltquality 4.6/5.6/8.8/10.9	=	*4,6*	
Column profile?	=	*1*	no=1, yes=2	Rolled screw threads	=	*1*	
Thickness tie plate	=	*10*	mm	Dubble strap joint no=1, yes=2	=	*1*	

Summary checks :

1 - Check tension on member :

$UC_1 = N_{Ed} / N_{t.Rd}$ = **0,30** **< 1**

2 - Check perpendicular force on member :

$UC_2 = M_{Ed} / M_{c.Rd}$ = **n.v.t.** **< 1**

3 - Check of the member slenderness :

$UC_3 = C_{max;buc} / C_{perm}$ = **245** **< 200 or 240**

4 - Check stress in member due to compression without excentricity:

$UC_4 = N_{E;d} / (C_{max;buc} \times N_{b;Rd})$ = **0,00** **< 1**

5 - Check stress in member due to compression with excentricity:

$UC_{5-1} = N_{E;d} / (C_{max;buc} \times N_{b;Rd})$ = **n.v.t.** **< 1**

$UC_{5-2} = N_{E;d} / N_{b;Rd} + k_{yy} \times (M_{y;Ed} + DM_{y;Ed}) / (C_{LT} \times M_{y;Rk})$ = **n.v.t.** **< 1**

6 - Check stress with combined buckling of two sections:

$UC_{5-1} = N_{E;d} / (C_{max;buc} \times N_{b;Rd})$ = **n.v.t.** **< 1**

$UC_{5-2} = N_{E;d} / N_{b;Rd} + k_{yy} \times (M_{y;Ed} + DM_{y;Ed}) / (C_{LT} \times M_{y;Rk})$ = **n.v.t.** **< 1**

7 - Check shear stress boltconnection:

$UC_7 = F_{v;Ed} / F_{v;Rd}$ = **0,42** **< 1**

8 - Check bearing stress boltconnection:

$UC_8 = F_{b;Ed} / F_{b;Rd}$ = **0,26** **< 1**

Remarks:

The maximum increase of stress or totalstress is(*2) : **$U.C_{max}$ = 0,42 = 42%**

(*1) Eventually, with the checks of the stresses, the cross-section reduction method is used according to prEN 1993-1-5

(*2) The total stress or increase of stress has been related to the permissible stress

Revision :	0	A	B	C	D	E	F
Date :	13-mrt-2012						
Name :	J Goddijn						
Checked :	J Boogert						

Order :	14509	**Dossier :**	13.039	**Berekening :**
Project :	Omleiding mast 52 tot 54 en noodmast 74, 150 kv-Lijn Leiden-Zoetermeer			
Part :	Mast 55			

Check equal leg angle-members according to Eurocode 3, prEN 1993-1-1 : 2003

File prEN 1993-1-1.revB.xls d.d. 2-32012, JG

Check section: *CrossArm 1-2 Horiz.-vert. en schuine Knikverkort. L50x50x5* *M65*

Memberforces : (Attention! pressure = "-" and tension ="+")

Compression:	N_{Sd}	=	-13,56	kN	***Combined forces diagonal:***			
Tension:	N_{Sd}	=	2,05	kN	$N_{comb1;c;s;d}$ (min. Compr. or tension)	=	0	kN
	$F_{perpend.;s;d}$	=	0	kN	$N_{comb2;c;s;d}$ (max. compression)	=	0	kN

Angle profile : H50/50/5 (*1)

h	=	50	mm	I_y	=	109643	mm^4
b	=	50	mm	$W_{y;el;eff.1}$	=	3049	mm^3
t_f	=	5	mm	$W_{y;el;eff.2}$	=	7811	mm^3
y_s	=	14,0	mm	i_y	=	15,1	mm
A_{bruto}	=	480	mm^2	i_v	=	9,6	mm

Material :

Mat. qual. Fe360 / Fe510	=	Fe360		Permissible stress $f_{y;d}$	=	235,0	N/mm^2

Geometry section and bolts:

$L_{y;cr}$	=	1888	mm	No. bolts / end / flange	=	1	
$L_{v;cr}$	=	1888	mm	Type of bolts M / "	=	16	
$L_{tot\ (with\ comb.\ buckling)}$	=	0	mm	End distance bolt e1	=	30	mm
$a*L_{tot\ (with\ comb.\ buckling)}$	=	0	mm	Centre-centre spacing bolt s1	=	50	mm
$L_{perpendicular\ force}$	=	0	mm	Edge distance bolt e2	=	25	mm
Position perpendicular force	=	1	(⌉=1, ⌋=2)	Boltquality 4.6/5.6/8.8/10.9	=	4,6	
Column profile?	=	1	no=1, yes=2	Rolled screw threads	=	1	
Thickness tie plate	=	5	mm	Dubble strap joint no=1, yes=2	=	1	

Summary checks :

1 - Check tension on member :

$UC_1 = N_{Ed} / N_{t.Rd}$ = **0,04** **< 1**

2 - Check perpendicular force on member :

$UC_2 = M_{Ed} / M_{c.Rd}$ = **n.v.t.** **< 1**

3 - Check of the member slenderness :

$UC_3 = C_{max;buc} / C_{perm}$ = **197** **< 200 or 240**

4 - Check stress in member due to compression without excentricity:

$UC_4 = N_{E;d} / (C_{max;buc} \times N_{b;Rd})$ = **n.v.t.** **< 1**

5 - Check stress in member due to compression with excentricity:

$UC_{5-1} = N_{E;d} / (C_{max;buc} \times N_{b;Rd})$ = **0,62** **< 1**

$UC_{5-2} = N_{E;d} / N_{b;Rd} + k_{yy} \times (M_{y;Ed} + DM_{y;Ed}) / (C_{LT} \times M_{y;Rk})$ = **0,82** **< 1**

6 - Check stress with combined buckling of two sections:

$UC_{5-1} = N_{E;d} / (C_{max;buc} \times N_{b;Rd})$ = **n.v.t.** **< 1**

$UC_{5-2} = N_{E;d} / N_{b;Rd} + k_{yy} \times (M_{y;Ed} + DM_{y;Ed}) / (C_{LT} \times M_{y;Rk})$ = **n.v.t.** **< 1**

7 - Check shear stress boltconnection:

$UC_7 = F_{v;Ed} / F_{v;Rd}$ = **0,45** **< 1**

8 - Check bearing stress boltconnection:

$UC_8 = F_{b;Ed} / F_{b;Rd}$ = **0,27** **< 1**

Remarks:

The maximum increase of stress or totalstress is(*2) : **$U.C_{max}$ = 0,82 = 82%**

(*1) Eventually, with the checks of the stresses, the cross-section reduction method is used according to prEN 1993-1-5

(*2) The total stress or increase of stress has been related to the permissible stress

Revision :	0	A	B	C	D	E	F
Date :	13-mrt-2012						
Name :	J Goddijn						
Checked :	J Boogert						

Order :	14509	**Dossier :**	13.039	**Berekening :**
Project :	Omleiding mast 52 tot 54 en noodmast 74, 150 kv-Lijn Leiden-Zoetermeer			
Part :	Mast 55			

D&C ENGINEERING

Check equal leg angle-members according to Eurocode 3, prEN 1993-1-1 : 2003

File prEN 1993-1-1.revB.xls d.d. 2-32012, JG

Check section: *CrossArm 1-2 Horizontale kruizen L65x65x7* *M66*

Memberforces : **(Attention! pressure = "-" and tension ="+")**

Compression:	N_{Sd}	=	*-45,09*	kN	***Combined forces diagonal:***			
Tension:	N_{Sd}	=	*37,23*	kN	$N_{comb1;c;s;d}$ (min. Compr. or tension)	=	*0*	kN
	$F_{perpend.;s;d}$	=	*0*	kN	$N_{comb2;c;s;d}$ (max. compression)	=	*0*	kN

Angle profile : *H65/65/7* (*1)

h	=	*65*	mm	I_y	=	*334319*	mm^4
b	=	*65*	mm	$W_{y;el;eff.1}$	=	*7185*	mm^3
t_f	=	*7*	mm	$W_{y;el;eff.2}$	=	*18103*	mm^3
y_s	=	*18,5*	mm	i_y	=	*19,6*	mm
A_{bruto}	=	*870*	mm^2	i_v	=	*12,5*	mm

Material :

Mat. qual. Fe360 / Fe510	=	*Fe360*		Permissible stress $f_{y;d}$	=	*235,0*	N/mm^2

Geometry section and bolts:

$L_{y;cr}$	=	*2073*	mm	No. bolts / end / flange	=	*2*	
$L_{v;cr}$	=	*1600*	mm	Type of bolts M / "	=	*20*	
L_{tot} (with comb. buckling)	=	*0*	mm	End distance bolt e1	=	*40*	mm
$a*L_{tot}$ (with comb. biuckling)	=	*0*	mm	Centre-centre spacing bolt s1	=	*70*	mm
$L_{perpendicular\ force}$	=	*0*	mm	Edge distance bolt e2	=	*25*	mm
Position perpendicular force	=	*1*	(⌉=1, ⌋=2)	Boltquality 4.6/5.6/8.8/10.9	=	*4,6*	
Column profile?	=	*1*	no=1, yes=2	Rolled screw threads	=	*1*	
Thickness tie plate	=	*8*	mm	Dubble strap joint no=1, yes=2	=	*1*	

Summary checks :

1 - Check tension on member :

$UC_1 = N_{Ed} / N_{t.Rd}$ = **0,37** **< 1**

2 - Check perpendicular force on member :

$UC_2 = M_{Ed} / M_{c.Rd}$ = **n.v.t.** **< 1**

3 - Check of the member slenderness :

$UC_3 = C_{max;buc} / C_{perm}$ = **128** **< 200 or 240**

4 - Check stress in member due to compression without excentricity:

$UC_4 = N_{E;d} / (C_{max;buc} \times N_{b;Rd})$ = **0,52** **< 1**

5 - Check stress in member due to compression with excentricity:

$UC_{5-1} = N_{E;d} / (C_{max;buc} \times N_{b;Rd})$ = **n.v.t.** **< 1**

$UC_{5-2} = N_{E;d} / N_{b;Rd} + k_{yy} \times (M_{y;Ed} + DM_{y;Ed}) / (C_{LT} \times M_{y;Rk})$ = **n.v.t.** **< 1**

6 - Check stress with combined buckling of two sections:

$UC_{5-1} = N_{E;d} / (C_{max;buc} \times N_{b;Rd})$ = **n.v.t.** **< 1**

$UC_{5-2} = N_{E;d} / N_{b;Rd} + k_{yy} \times (M_{y;Ed} + DM_{y;Ed}) / (C_{LT} \times M_{y;Rk})$ = **n.v.t.** **< 1**

7 - Check shear stress boltconnection:

$UC_7 = F_{v;Ed} / F_{v;Rd}$ = **0,48** **< 1**

8 - Check bearing stress boltconnection:

$UC_8 = F_{b;Ed} / F_{b;Rd}$ = **0,51** **< 1**

Remarks:

The maximum increase of stress or totalstress is(*2) : **$U.C_{max}$ = 0,52 = 52%**

(*1) Eventually, with the checks of the stresses, the cross-section reduction method is used according to prEN 1993-1-5

(*2) The total stress or increase of stress has been related to the permissible stress

Revision :	0	A	B	C	D	E	F
Date :	13-mrt-2012						
Name :	J Goddijn						
Checked :	J Boogert						

Order :	14509	**Dossier :**	13.039	**Berekening :**
Project :	Omleiding mast 52 tot 54 en noodmast 74, 150 kv-Lijn Leiden-Zoetermeer			
Part :	Mast 55			

D&C ENGINEERING

Check equal leg angle-members according to Eurocode 3, prEN 1993-1-1 : 2003

File prEN 1993-1-1.revB.xls d.d. 2-32012, JG

Check section: *CrossArm 1-2 Horizontale kruizen L55x55x6* *M67*

Memberforces : **(Attention! pressure = "-" and tension ="+")**

Compression:	N_{Sd}	=	*-18,04*	kN	***Combined forces diagonal:***			
Tension:	N_{Sd}	=	*21,49*	kN	$N_{comb1;c;s;d}$ (min. Compr. or tension)	=	*0*	kN
	$F_{perpend.;s;d}$	=	*0*	kN	$N_{comb2;c;s;d}$ (max. compression)	=	*0*	kN

Angle profile : *H55/55/6* (*1)

h	=	*55*	mm	I_y	=	*172872*	mm^4
b	=	*55*	mm	$W_{y;el;eff.1}$	=	*4391*	mm^3
t_f	=	*6*	mm	$W_{y;el;eff.2}$	=	*11060*	mm^3
y_s	=	*15,6*	mm	i_y	=	*16,6*	mm
A_{bruto}	=	*631*	mm^2	i_v	=	*10,5*	mm

Material :

Mat. qual. Fe360 / Fe510	=	*Fe360*		Permissible stress $f_{y;d}$	=	*235,0*	N/mm^2

Geometry section and bolts:

$L_{y;cr}$	=	*2713*	mm	No. bolts / end / flange	=	*2*	
$L_{v;cr}$	=	*1600*	mm	Type of bolts M / "	=	*16*	
$L_{tot\ (with\ comb.\ buckling)}$	=	*0*	mm	End distance bolt e1	=	*30*	mm
$a*L_{tot\ (with\ comb.\ buckling)}$	=	*0*	mm	Centre-centre spacing bolt s1	=	*60*	mm
$L_{perpendicular\ force}$	=	*0*	mm	Edge distance bolt e2	=	*25*	mm
Position perpendicular force	=	*1*	(⌉=1, ⌋=2)	Boltquality 4.6/5.6/8.8/10.9	=	*4,6*	
Column profile?	=	*1*	no=1, yes=2	Rolled screw threads	=	*1*	
Thickness tie plate	=	*8*	mm	Dubble strap joint no=1, yes=2	=	*1*	

Summary checks :

1 - Check tension on member :

$UC_1 = N_{Ed} / N_{t.Rd}$ = **0,29** **< 1**

2 - Check perpendicular force on member :

$UC_2 = M_{Ed} / M_{c.Rd}$ = **n.v.t.** **< 1**

3 - Check of the member slenderness :

$UC_3 = C_{max;buc} / C_{perm}$ = **164** **< 200 or 240**

4 - Check stress in member due to compression without excentricity:

$UC_4 = N_{E;d} / (C_{max;buc} \times N_{b;Rd})$ = **0,45** **< 1**

5 - Check stress in member due to compression with excentricity:

$UC_{5-1} = N_{E;d} / (C_{max;buc} \times N_{b;Rd})$ = **n.v.t.** **< 1**

$UC_{5-2} = N_{E;d} / N_{b;Rd} + k_{yy} \times (M_{y;Ed} + DM_{y;Ed}) / (C_{LT} \times M_{y;Rk})$ = **n.v.t.** **< 1**

6 - Check stress with combined buckling of two sections:

$UC_{5-1} = N_{E;d} / (C_{max;buc} \times N_{b;Rd})$ = **n.v.t.** **< 1**

$UC_{5-2} = N_{E;d} / N_{b;Rd} + k_{yy} \times (M_{y;Ed} + DM_{y;Ed}) / (C_{LT} \times M_{y;Rk})$ = **n.v.t.** **< 1**

7 - Check shear stress boltconnection:

$UC_7 = F_{v;Ed} / F_{v;Rd}$ = **0,36** **< 1**

8 - Check bearing stress boltconnection:

$UC_8 = F_{b;Ed} / F_{b;Rd}$ = **0,32** **< 1**

Remarks:

The maximum increase of stress or totalstress is(*2) : **$U.C_{max}$ = 0,45 = 45%**

(*1) Eventually, with the checks of the stresses, the cross-section reduction method is used according to prEN 1993-1-5

(*2) The total stress or increase of stress has been related to the permissible stress

Revision :	0	A	B	C	D	E	F
Date :	13-mrt-2012						
Name :	J Goddijn						
Checked :	J Boogert						

Order	:	14509	**Dossier :**	13.039	**Berekening :**
Project	:	Omleiding mast 52 tot 54 en noodmast 74, 150 kv-Lijn Leiden-Zoetermeer			
Part	:	Mast 55			

D&C ENGINEERING

Check equal leg angle-members according to Eurocode 3, prEN 1993-1-1 : 2003

File prEN 1993-1-1.revB.xls d.d. 2-32012, JG

Check section: *CrossArm 1-2 Horizontale kruizen L80x80x8* *M68*

Memberforces : **(Attention! pressure = "-" and tension ="+")**

Compression:	N_{Sd}	=	*-58,73*	kN	***Combined forces diagonal:***			
Tension:	N_{Sd}	=	*36,86*	kN	$N_{comb1;c;s;d}$ (min. Compr. or tension)	=	*0*	kN
	$F_{perpend.;s;d}$	=	*0*	kN	$N_{comb2;c;s;d}$ (max. compression)	=	*0*	kN

Angle profile : *H80/80/8* (*1)

h	=	*80*	mm	I_y	=	*722469*	mm^4
b	=	*80*	mm	$W_{y;el;eff.1}$	=	*12576*	mm^3
t_f	=	*8*	mm	$W_{y;el;eff.2}$	=	*32038*	mm^3
y_s	=	*22,6*	mm	i_y	=	*24,3*	mm
A_{bruto}	=	*1227*	mm^2	i_v	=	*15,4*	mm

Material :

Mat. qual. Fe360 / Fe510	=	*Fe360*		Permissible stress $f_{y;d}$	=	*235,0*	N/mm^2

Geometry section and bolts:

$L_{y;cr}$	=	*4190*	mm	No. bolts / end / flange		=	*2*	
$L_{v;cr}$	=	*2445*	mm	Type of bolts	M / "	=	*16*	
$L_{tot\ (with\ comb.\ buckling)}$	=	*0*	mm	End distance bolt	e1	=	*30*	mm
$a*L_{tot\ (with\ comb.\ buckling)}$	=	*0*	mm	Centre-centre spacing bolt	s1	=	*60*	mm
$L_{perpendicular\ force}$	=	*0*	mm	Edge distance bolt	e2	=	*25*	mm
Position perpendicular force	=	*1*	(⌉=1, ⌋=2)	Boltquality	4.6/5.6/8.8/10.9	=	*4,6*	
Column profile?	=	*1*	no=1, yes=2	Rolled screw threads		=	*1*	
Thickness tie plate	=	*8*	mm	Dubble strap joint no=1, yes=2		=	*1*	

Summary checks :

1 - Check tension on member :

$UC_1 = N_{Ed} / N_{t.Rd}$ = **0,24** **< 1**

2 - Check perpendicular force on member :

$UC_2 = M_{Ed} / M_{c.Rd}$ = **n.v.t.** **< 1**

3 - Check of the member slenderness :

$UC_3 = C_{max;buc} / C_{perm}$ = **173** **< 200 or 240**

4 - Check stress in member due to compression without excentricity:

$UC_4 = N_{E;d} / (C_{max;buc} \times N_{b;Rd})$ = **0,80** **< 1**

5 - Check stress in member due to compression with excentricity:

$UC_{5-1} = N_{E;d} / (C_{max;buc} \times N_{b;Rd})$ = **n.v.t.** **< 1**

$UC_{5-2} = N_{E;d} / N_{b;Rd} + k_{yy} \times (M_{y;Ed} + DM_{y;Ed}) / (C_{LT} \times M_{y;Rk})$ = **n.v.t.** **< 1**

6 - Check stress with combined buckling of two sections:

$UC_{5-1} = N_{E;d} / (C_{max;buc} \times N_{b;Rd})$ = **n.v.t.** **< 1**

$UC_{5-2} = N_{E;d} / N_{b;Rd} + k_{yy} \times (M_{y;Ed} + DM_{y;Ed}) / (C_{LT} \times M_{y;Rk})$ = **n.v.t.** **< 1**

7 - Check shear stress boltconnection:

$UC_7 = F_{v;Ed} / F_{v;Rd}$ = **0,97** **< 1**

8 - Check bearing stress boltconnection:

$UC_8 = F_{b;Ed} / F_{b;Rd}$ = **0,42** **< 1**

Remarks:

The maximum increase of stress or totalstress is(*2) : **$U.C_{max}$ = 0,97 = 97%**

(*1) Eventually, with the checks of the stresses, the cross-section reduction method is used according to prEN 1993-1-5

(*2) The total stress or increase of stress has been related to the permissible stress

Revision :	0	A	B	C	D	E	F
Date :	13-mrt-2012						
Name :	J Goddijn						
Checked :	J Boogert						

Order	:	14509	**Dossier :**	13.039	**Berekening :**
Project	:	Omleiding mast 52 tot 54 en noodmast 74, 150 kv-Lijn Leiden-Zoetermeer			
Part	:	Mast 55			

D&C ENGINEERING

Check equal leg angle-members according to Eurocode 3, prEN 1993-1-1 : 2003

File prEN 1993-1-1.revB.xls d.d. 2-32012, JG

Check section: *CrossArm 1-2 Schuine verbanden L60x60x6* *M69*

Memberforces : **(Attention! pressure = "-" and tension ="+")**

Compression:	N_{Sd}	=	*0*	kN	***Combined forces diagonal:***			
Tension:	N_{Sd}	=	*65,96*	kN	$N_{comb1;c;s;d}$ (min. Compr. or tension)	=	*0*	kN
	$F_{perpend.;s;d}$	=	*0*	kN	$N_{comb2;c;s;d}$ (max. compression)	=	*0*	kN

Angle profile : *H80/80/8* (*1)

h	=	*80*	mm	I_y	=	*722469*	mm^4
b	=	*80*	mm	$W_{y;el;eff.1}$	=	*12576*	mm^3
t_f	=	*8*	mm	$W_{y;el;eff.2}$	=	*32038*	mm^3
y_s	=	*22,6*	mm	i_y	=	*24,3*	mm
A_{bruto}	=	*1227*	mm^2	i_v	=	*15,4*	mm

Material :

Mat. qual. Fe360 / Fe510	=	*Fe360*		Permissible stress $f_{y;d}$	=	*235,0*	N/mm^2

Geometry section and bolts:

$L_{y;cr}$	=	*4190*	mm	No. bolts / end / flange	=	*2*	
$L_{v;cr}$	=	*2445*	mm	Type of bolts M / "	=	*16*	
$L_{tot\ (with\ comb.\ buckling)}$	=	*0*	mm	End distance bolt e1	=	*30*	mm
$a*L_{tot\ (with\ comb.\ buckling)}$	=	*0*	mm	Centre-centre spacing bolt s1	=	*60*	mm
$L_{perpendicular\ force}$	=	*0*	mm	Edge distance bolt e2	=	*25*	mm
Position perpendicular force	=	*1*	(⌉=1, ⌋=2)	Boltquality 4.6/5.6/8.8/10.9	=	*4,6*	
Column profile?	=	*1*	no=1, yes=2	Rolled screw threads	=	*1*	
Thickness tie plate	=	*8*	mm	Dubble strap joint no=1, yes=2	=	*1*	

Summary checks :

1 - Check tension on member :

$UC_1 = N_{Ed} / N_{t.Rd}$ = **0,42** **< 1**

2 - Check perpendicular force on member :

$UC_2 = M_{Ed} / M_{c.Rd}$ = **n.v.t.** **< 1**

3 - Check of the member slenderness :

$UC_3 = C_{max;buc} / C_{perm}$ = **173** **< 200 or 240**

4 - Check stress in member due to compression without excentricity:

$UC_4 = N_{E;d} / (C_{max;buc} \times N_{b;Rd})$ = **0,00** **< 1**

5 - Check stress in member due to compression with excentricity:

$UC_{5-1} = N_{E;d} / (C_{max;buc} \times N_{b;Rd})$ = **n.v.t.** **< 1**

$UC_{5-2} = N_{E;d} / N_{b;Rd} + k_{yy} \times (M_{y;Ed} + DM_{y;Ed}) / (C_{LT} \times M_{y;Rk})$ = **n.v.t.** **< 1**

6 - Check stress with combined buckling of two sections:

$UC_{5-1} = N_{E;d} / (C_{max;buc} \times N_{b;Rd})$ = **n.v.t.** **< 1**

$UC_{5-2} = N_{E;d} / N_{b;Rd} + k_{yy} \times (M_{y;Ed} + DM_{y;Ed}) / (C_{LT} \times M_{y;Rk})$ = **n.v.t.** **< 1**

7 - Check shear stress boltconnection:

$UC_7 = F_{v;Ed} / F_{v;Rd}$ = **1,09** **> 1 !!**

8 - Check bearing stress boltconnection:

$UC_8 = F_{b;Ed} / F_{b;Rd}$ = **0,74** **< 1**

Remarks:

The maximum increase of stress or totalstress is(*2) : **$U.C_{max}$ = 1,09 = 109%**

(*1) Eventually, with the checks of the stresses, the cross-section reduction method is used according to prEN 1993-1-5

(*2) The total stress or increase of stress has been related to the permissible stress

Revision :	0	A	B	C	D	E	F
Date :	13-mrt-2012						
Name :	J Goddijn						
Checked :	J Boogert						

Order	:	14509	**Dossier :**	13.039	**Berekening :**
Project	:	Omleiding mast 52 tot 54 en noodmast 74, 150 kv-Lijn Leiden-Zoetermeer			
Part	:	Mast 55			

D&C ENGINEERING

Check equal leg angle-members according to Eurocode 3, prEN 1993-1-1 : 2003

File prEN 1993-1-1.revB.xls d.d. 2-32012, JG

Check section: *CrossArm 3-4 Boven renden L80x80x8* *M70*

Memberforces : **(Attention! pressure = "-" and tension ="+")**

Compression:	N_{Sd}	=	*0*	kN	***Combined forces diagonal:***			
Tension:	N_{Sd}	=	*61,01*	kN	$N_{comb1;c;s;d}$ (min. Compr. or tension)	=	*0*	kN
	$F_{perpend.;s;d}$	=	*0*	kN	$N_{comb2;c;s;d}$ (max. compression)	=	*0*	kN

Angle profile : *H80/80/8* (*1)

h	=	*80*	mm	I_y	=	*722469*	mm^4
b	=	*80*	mm	$W_{y;el;eff.1}$	=	*12576*	mm^3
t_f	=	*8*	mm	$W_{y;el;eff.2}$	=	*32038*	mm^3
y_s	=	*22,6*	mm	i_y	=	*24,3*	mm
A_{bruto}	=	*1227*	mm^2	i_v	=	*15,4*	mm

Material :

Mat. qual. Fe360 / Fe510	=	*Fe360*		Permissible stress $f_{y;d}$	=	*235,0*	N/mm^2

Geometry section and bolts:

$L_{y;cr}$	=	*2880*	mm	No. bolts / end / flange	=	*3*	
$L_{v;cr}$	=	*2880*	mm	Type of bolts M / "	=	*20*	
$L_{tot\ (with\ comb.\ buckling)}$	=	*0*	mm	End distance bolt e1	=	*40*	mm
$a*L_{tot\ (with\ comb.\ buckling)}$	=	*0*	mm	Centre-centre spacing bolt s1	=	*70*	mm
$L_{perpendicular\ force}$	=	*0*	mm	Edge distance bolt e2	=	*35*	mm
Position perpendicular force	=	*1*	(⌉=1, ⌋=2)	Boltquality 4.6/5.6/8.8/10.9	=	*4,6*	
Column profile?	=	*1*	no=1, yes=2	Rolled screw threads	=	*1*	
Thickness tie plate	=	*10*	mm	Dubble strap joint no=1, yes=2	=	*1*	

Summary checks :

1 - Check tension on member :

$UC_1 = N_{Ed} / N_{t.Rd}$ = **0,36** **< 1**

2 - Check perpendicular force on member :

$UC_2 = M_{Ed} / M_{c.Rd}$ = **n.v.t.** **< 1**

3 - Check of the member slenderness :

$UC_3 = C_{max;buc} / C_{perm}$ = **187** **< 200 or 240**

4 - Check stress in member due to compression without excentricity:

$UC_4 = N_{E;d} / (C_{max;buc} \times N_{b;Rd})$ = **0,00** **< 1**

5 - Check stress in member due to compression with excentricity:

$UC_{5-1} = N_{E;d} / (C_{max;buc} \times N_{b;Rd})$ = **n.v.t.** **< 1**

$UC_{5-2} = N_{E;d} / N_{b;Rd} + k_{yy} \times (M_{y;Ed} + DM_{y;Ed}) / (C_{LT} \times M_{y;Rk})$ = **n.v.t.** **< 1**

6 - Check stress with combined buckling of two sections:

$UC_{5-1} = N_{E;d} / (C_{max;buc} \times N_{b;Rd})$ = **n.v.t.** **< 1**

$UC_{5-2} = N_{E;d} / N_{b;Rd} + k_{yy} \times (M_{y;Ed} + DM_{y;Ed}) / (C_{LT} \times M_{y;Rk})$ = **n.v.t.** **< 1**

7 - Check shear stress boltconnection:

$UC_7 = F_{v;Ed} / F_{v;Rd}$ = **0,43** **< 1**

8 - Check bearing stress boltconnection:

$UC_8 = F_{b;Ed} / F_{b;Rd}$ = **0,29** **< 1**

Remarks:

The maximum increase of stress or totalstress is(*2) : **$U.C_{max}$ = 0,43 = 43%**

(*1) Eventually, with the checks of the stresses, the cross-section reduction method is used according to prEN 1993-1-5

(*2) The total stress or increase of stress has been related to the permissible stress

Revision :	0	A	B	C	D	E	F
Date :	13-mrt-2012						
Name :	J Goddijn						
Checked :	J Boogert						

Order :	14509	**Dossier :**	13.039	**Berekening :**
Project :	Omleiding mast 52 tot 54 en noodmast 74, 150 kv-Lijn Leiden-Zoetermeer			
Part :	Mast 55			

D&C ENGINEERING

Check equal leg angle-members according to Eurocode 3, prEN 1993-1-1 : 2003

File prEN 1993-1-1.revB.xls d.d. 2-32012, JG

Check section: *CrossArm 3-4 Horizontale kruizen L60x60x6* *M71*

Memberforces : **(Attention! pressure = "-" and tension ="+")**

Compression:	N_{Sd}	=	*-39,39*	kN	***Combined forces diagonal:***			
Tension:	N_{Sd}	=	*32,96*	kN	$N_{comb1;c;s;d}$ (min. Compr. or tension)	=	*0*	kN
	$F_{perpend.;s;d}$	=	*0*	kN	$N_{comb2;c;s;d}$ (max. compression)	=	*0*	kN

Angle profile : *H65/65/7* (*1)

h	=	*65*	mm	I_y	=	*334319*	mm^4
b	=	*65*	mm	$W_{y;el;eff.1}$	=	*7185*	mm^3
t_f	=	*7*	mm	$W_{y;el;eff.2}$	=	*18103*	mm^3
y_s	=	*18,5*	mm	i_y	=	*19,6*	mm
A_{bruto}	=	*870*	mm^2	i_v	=	*12,5*	mm

Material :

Mat. qual. Fe360 / Fe510	=	*Fe360*		Permissible stress $f_{y;d}$	=	*235,0*	N/mm^2

Geometry section and bolts:

$L_{y;cr}$	=	*2347*	mm	No. bolts / end / flange	=	*2*	
$L_{v;cr}$	=	*2347*	mm	Type of bolts M / "	=	*16*	
L_{tot} (with comb. buckling)	=	*0*	mm	End distance bolt e1	=	*30*	mm
$a*L_{tot}$ (with comb. buckling)	=	*0*	mm	Centre-centre spacing bolt s1	=	*60*	mm
$L_{perpendicular\ force}$	=	*0*	mm	Edge distance bolt e2	=	*25*	mm
Position perpendicular force	=	*1*	(⌉=1, ⌋=2)	Boltquality 4.6/5.6/8.8/10.9	=	*4,6*	
Column profile?	=	*1*	no=1, yes=2	Rolled screw threads	=	*1*	
Thickness tie plate	=	*8*	mm	Dubble strap joint no=1, yes=2	=	*1*	

Summary checks :

1 - Check tension on member :

$UC_1 = N_{Ed} / N_{t.Rd}$ = **0,31** **< 1**

2 - Check perpendicular force on member :

$UC_2 = M_{Ed} / M_{c.Rd}$ = **n.v.t.** **< 1**

3 - Check of the member slenderness :

$UC_3 = C_{max;buc} / C_{perm}$ = **188** **< 200 or 240**

4 - Check stress in member due to compression without excentricity:

$UC_4 = N_{E;d} / (C_{max;buc} \times N_{b;Rd})$ = **0,73** **< 1**

5 - Check stress in member due to compression with excentricity:

$UC_{5-1} = N_{E;d} / (C_{max;buc} \times N_{b;Rd})$ = **n.v.t.** **< 1**

$UC_{5-2} = N_{E;d} / N_{b;Rd} + k_{yy} \times (M_{y;Ed} + DM_{y;Ed}) / (C_{LT} \times M_{y;Rk})$ = **n.v.t.** **< 1**

6 - Check stress with combined buckling of two sections:

$UC_{5-1} = N_{E;d} / (C_{max;buc} \times N_{b;Rd})$ = **n.v.t.** **< 1**

$UC_{5-2} = N_{E;d} / N_{b;Rd} + k_{yy} \times (M_{y;Ed} + DM_{y;Ed}) / (C_{LT} \times M_{y;Rk})$ = **n.v.t.** **< 1**

7 - Check shear stress boltconnection:

$UC_7 = F_{v;Ed} / F_{v;Rd}$ = **0,65** **< 1**

8 - Check bearing stress boltconnection:

$UC_8 = F_{b;Ed} / F_{b;Rd}$ = **0,42** **< 1**

Remarks:

The maximum increase of stress or totalstress is(*2) : **$U.C_{max}$ = 0,73 = 73%**

(*1) Eventually, with the checks of the stresses, the cross-section reduction method is used according to prEN 1993-1-5

(*2) The total stress or increase of stress has been related to the permissible stress

Revision :	0	A	B	C	D	E	F
Date :	13-mrt-2012						
Name :	J Goddijn						
Checked :	J Boogert						

Order :	14509	**Dossier :**	13.039	**Berekening :**
Project :	Omleiding mast 52 tot 54 en noodmast 74, 150 kv-Lijn Leiden-Zoetermeer			
Part :	Mast 55			

D&C ENGINEERING

Check equal leg angle-members according to Eurocode 3, prEN 1993-1-1 : 2003

File prEN 1993-1-1.revB.xls d.d. 2-32012, JG

Check section: *CrossArm 5-6 Randen L80x80x8* *M72*

Memberforces : **(Attention! pressure = "-" and tension ="+")**

Compression:	N_{Sd}	=	*-115,31*	kN	***Combined forces diagonal:***			
Tension:	N_{Sd}	=	*81,75*	kN	$N_{comb1;c;s;d}$ (min. Compr. or tension)	=	*0*	kN
	$F_{perpend.;s;d}$	=	*0*	kN	$N_{comb2;c;s;d}$ (max. compression)	=	*0*	kN

Angle profile : *H80/80/8* (*1)

h	=	*80*	mm	I_y	=	*722469*	mm^4
b	=	*80*	mm	$W_{y;el;eff.1}$	=	*12576*	mm^3
t_f	=	*8*	mm	$W_{y;el;eff.2}$	=	*32038*	mm^3
y_s	=	*22,6*	mm	i_y	=	*24,3*	mm
A_{bruto}	=	*1227*	mm^2	i_v	=	*15,4*	mm

Material :

Mat. qual. Fe360 / Fe510	=	*Fe360*		Permissible stress $f_{y;d}$	=	*235,0*	N/mm^2

Geometry section and bolts:

$L_{y;cr}$	=	*3350*	mm	No. bolts / end / flange	=	*2*	
$L_{v;cr}$	=	*2008*	mm	Type of bolts M / "	=	*20*	
L_{tot} (with comb. buckling)	=	*0*	mm	End distance bolt e1	=	*40*	mm
$a*L_{tot}$ (with comb. buckling)	=	*0*	mm	Centre-centre spacing bolt s1	=	*73*	mm
$L_{perpendicular\ force}$	=	*0*	mm	Edge distance bolt e2	=	*25*	mm
Position perpendicular force	=	*1*	(⌉=1, ⌋=2)	Boltquality 4.6/5.6/8.8/10.9	=	*4,6*	
Column profile?	=	*1*	no=1, yes=2	Rolled screw threads	=	*1*	
Thickness tie plate	=	*10*	mm	Dubble strap joint no=1, yes=2	=	*1*	

Summary checks :

1 - Check tension on member :

$UC_1 = N_{Ed} / N_{t.Rd}$ = **0,54** **< 1**

2 - Check perpendicular force on member :

$UC_2 = M_{Ed} / M_{c.Rd}$ = **n.v.t.** **< 1**

3 - Check of the member slenderness :

$UC_3 = C_{max;buc} / C_{perm}$ = **138** **< 200 or 240**

4 - Check stress in member due to compression without excentricity:

$UC_4 = N_{E;d} / (C_{max;buc} \times N_{b;Rd})$ = **1,13** **> 1 !!**

5 - Check stress in member due to compression with excentricity:

$UC_{5-1} = N_{E;d} / (C_{max;buc} \times N_{b;Rd})$ = **n.v.t.** **< 1**

$UC_{5-2} = N_{E;d} / N_{b;Rd} + k_{yy} \times (M_{y;Ed} + DM_{y;Ed}) / (C_{LT} \times M_{y;Rk})$ = **n.v.t.** **< 1**

6 - Check stress with combined buckling of two sections:

$UC_{5-1} = N_{E;d} / (C_{max;buc} \times N_{b;Rd})$ = **n.v.t.** **< 1**

$UC_{5-2} = N_{E;d} / N_{b;Rd} + k_{yy} \times (M_{y;Ed} + DM_{y;Ed}) / (C_{LT} \times M_{y;Rk})$ = **n.v.t.** **< 1**

7 - Check shear stress boltconnection:

$UC_7 = F_{v;Ed} / F_{v;Rd}$ = **1,23** **> 1 !!**

8 - Check bearing stress boltconnection:

$UC_8 = F_{b;Ed} / F_{b;Rd}$ = **0,99** **< 1**

Remarks:

The maximum increase of stress or totalstress is(*2) : **$U.C_{max}$ = 1,23 = 123%**

(*1) Eventually, with the checks of the stresses, the cross-section reduction method is used according to prEN 1993-1-5

(*2) The total stress or increase of stress has been related to the permissible stress

Revision :	0	A	B	C	D	E	F
Date :	13-mrt-2012						
Name :	J Goddijn						
Checked :	J Boogert						

Order :	14509	**Dossier :**	13.039	**Berekening :**
Project :	Omleiding mast 52 tot 54 en noodmast 74, 150 kv-Lijn Leiden-Zoetermeer			
Part :	Mast 55			

D&C ENGINEERING

Check equal leg angle-members according to Eurocode 3, prEN 1993-1-1 : 2003

File prEN 1993-1-1.revB.xls d.d. 2-32012, JG

Check section: *CrossArm 5-6 Schuine randen L100x75x7* *M73*

Memberforces : **(Attention! pressure = "-" and tension ="+")**

Compression:	N_{Sd}	=	*-42,19*	kN	***Combined forces diagonal:***			
Tension:	N_{Sd}	=	*59,45*	kN	$N_{comb1;c;s;d}$ (min. Compr. or tension)	=	*0*	kN
	$F_{perpend.;s;d}$	=	*0*	kN	$N_{comb2;c;s;d}$ (max. compression)	=	*0*	kN

Angle profile : *H100/75/7* (*1)

h	=	*100*	mm	I_y	=	*1179878*	mm^4
b	=	*75*	mm	$W_{y;el;eff.1}$	=	*14444*	mm^3
t_f	=	*7*	mm	$W_{y;el;eff.2}$	=	*64418*	mm^3
y_s	=	*18,3*	mm	i_y	=	*31,5*	mm
A_{bruto}	=	*1187*	mm^2	i_v	=	*15,9*	mm

Material :

Mat. qual. Fe360 / Fe510	=	*Fe360*		Permissible stress $f_{y;d}$	=	*235,0*	N/mm^2

Geometry section and bolts:

$L_{y;cr}$	=	*6950*	mm	No. bolts / end / flange		=	*2*	
$L_{v;cr}$	=	*1726*	mm	Type of bolts	M / "	=	*20*	
$L_{tot\ (with\ comb.\ buckling)}$	=	*0*	mm	End distance bolt	e1	=	*40*	mm
$a*L_{tot\ (with\ comb.\ buckling)}$	=	*0*	mm	Centre-centre spacing bolt	s1	=	*70*	mm
$L_{perpendicular\ force}$	=	*0*	mm	Edge distance bolt	e2	=	*35*	mm
Position perpendicular force	=	*1*	(⌉=1, ⌋=2)	Boltquality	4.6/5.6/8.8/10.9	=	*4,6*	
Column profile?	=	*1*	no=1, yes=2	Rolled screw threads		=	*1*	
Thickness tie plate	=	*10*	mm	Dubble strap joint no=1, yes=2		=	*1*	

Summary checks :

1 - Check tension on member :

$UC_1 = N_{Ed} / N_{t.Rd}$ = **0,41** **< 1**

2 - Check perpendicular force on member :

$UC_2 = M_{Ed} / M_{c.Rd}$ = **n.v.t.** **< 1**

3 - Check of the member slenderness :

$UC_3 = C_{max;buc} / C_{perm}$ = **220** **< 200 or 240**

4 - Check stress in member due to compression without excentricity:

$UC_4 = N_{E;d} / (C_{max;buc} \times N_{b;Rd})$ = **0,82** **< 1**

5 - Check stress in member due to compression with excentricity:

$UC_{5-1} = N_{E;d} / (C_{max;buc} \times N_{b;Rd})$ = **n.v.t.** **< 1**

$UC_{5-2} = N_{E;d} / N_{b;Rd} + k_{yy} \times (M_{y;Ed} + DM_{y;Ed}) / (C_{LT} \times M_{y;Rk})$ = **n.v.t.** **< 1**

6 - Check stress with combined buckling of two sections:

$UC_{5-1} = N_{E;d} / (C_{max;buc} \times N_{b;Rd})$ = **n.v.t.** **< 1**

$UC_{5-2} = N_{E;d} / N_{b;Rd} + k_{yy} \times (M_{y;Ed} + DM_{y;Ed}) / (C_{LT} \times M_{y;Rk})$ = **n.v.t.** **< 1**

7 - Check shear stress boltconnection:

$UC_7 = F_{v;Ed} / F_{v;Rd}$ = **0,63** **< 1**

8 - Check bearing stress boltconnection:

$UC_8 = F_{b;Ed} / F_{b;Rd}$ = **0,49** **< 1**

Remarks:

The maximum increase of stress or totalstress is(*2) : **$U.C_{max}$ = 0,82 = 82%**

(*1) Eventually, with the checks of the stresses, the cross-section reduction method is used according to prEN 1993-1-5

(*2) The total stress or increase of stress has been related to the permissible stress

Revision :	0	A	B	C	D	E	F
Date :	13-mrt-2012						
Name :	J Goddijn						
Checked :	J Boogert						

Order :	14509	**Dossier :**	13.039	**Berekening :**
Project :	Omleiding mast 52 tot 54 en noodmast 74, 150 kv-Lijn Leiden-Zoetermeer			
Part :	Mast 55			

Check equal leg angle-members according to Eurocode 3, prEN 1993-1-1 : 2003

File prEN 1993-1-1.revB.xls d.d. 2-32012, JG

Check section: *CrossArm 5-6 Horizontale en schuine knikverkorters L50x50x5* *M74*

Memberforces : **(Attention! pressure = "-" and tension ="+")**

Compression:	N_{Sd}	=	-2,9	kN	*Combined forces diagonal:*			
Tension:	N_{Sd}	=	2,9	kN	$N_{comb1;c;s;d}$ (min. Compr. or tension)	=	0	kN
	$F_{perpend.;s;d}$	=	1,5	kN	$N_{comb2;c;s;d}$ (max. compression)	=	0	kN

Angle profile : H50/50/5 (*1)

h	=	50	mm	I_y	=	109643	mm^4
b	=	50	mm	$W_{y;el;eff.1}$	=	3049	mm^3
t_f	=	5	mm	$W_{y;el;eff.2}$	=	7811	mm^3
y_s	=	14,0	mm	i_y	=	15,1	mm
A_{bruto}	=	480	mm^2	i_v	=	9,6	mm

Material :

Mat. qual. Fe360 / Fe510	=	Fe360		Permissible stress $f_{y;d}$	=	235,0	N/mm^2

Geometry section and bolts:

$L_{y;cr}$	=	1910	mm	No. bolts / end / flange	=	1	
$L_{v;cr}$	=	1910	mm	Type of bolts M / "	=	16	
$L_{tot\ (with\ comb.\ buckling)}$	=	0	mm	End distance bolt e1	=	30	mm
$a*L_{tot\ (with\ comb.\ buckling)}$	=	0	mm	Centre-centre spacing bolt s1	=	60	mm
$L_{perpendicular\ force}$	=	969	mm	Edge distance bolt e2	=	25	mm
Position perpendicular force	=	1	(⌉=1, ⌋=2)	Boltquality 4.6/5.6/8.8/10.9	=	4,6	
Column profile?	=	1	no=1, yes=2	Rolled screw threads	=	1	
Thickness tie plate	=	8	mm	Dubble strap joint no=1, yes=2	=	1	

Summary checks :

1 - Check tension on member :

$UC_1 = N_{Ed} / N_{t.Rd}$ = **0,06** **< 1**

2 - Check perpendicular force on member :

$UC_2 = M_{Ed} / M_{c.Rd}$ = **0,51** **< 1**

3 - Check of the member slenderness :

$UC_3 = C_{max;buc} / C_{perm}$ = **199** **< 200 or 240**

4 - Check stress in member due to compression without excentricity:

$UC_4 = N_{E;d} / (C_{max;buc} \times N_{b;Rd})$ = **n.v.t.** **< 1**

5 - Check stress in member due to compression with excentricity:

$UC_{5-1} = N_{E;d} / (C_{max;buc} \times N_{b;Rd})$ = **0,14** **< 1**

$UC_{5-2} = N_{E;d} / N_{b;Rd} + k_{yy} \times (M_{y;Ed} + DM_{y;Ed}) / (C_{LT} \times M_{y;Rk})$ = **0,18** **< 1**

6 - Check stress with combined buckling of two sections:

$UC_{5-1} = N_{E;d} / (C_{max;buc} \times N_{b;Rd})$ = **n.v.t.** **< 1**

$UC_{5-2} = N_{E;d} / N_{b;Rd} + k_{yy} \times (M_{y;Ed} + DM_{y;Ed}) / (C_{LT} \times M_{y;Rk})$ = **n.v.t.** **< 1**

7 - Check shear stress boltconnection:

$UC_7 = F_{v;Ed} / F_{v;Rd}$ = **0,10** **< 1**

8 - Check bearing stress boltconnection:

$UC_8 = F_{b;Ed} / F_{b;Rd}$ = **0,10** **< 1**

Remarks:

The maximum increase of stress or totalstress is(*2) : **$U.C_{max}$ = 0,51 = 51%**

(*1) Eventually, with the checks of the stresses, the cross-section reduction method is used according to prEN 1993-1-5

(*2) The total stress or increase of stress has been related to the permissible stress

Revision :	0	A	B	C	D	E	F
Date :	13-mrt-2012						
Name :	J Goddijn						
Checked :	J Boogert						

Order :	14509	**Dossier :**	13.039	**Berekening :**
Project :	Omleiding mast 52 tot 54 en noodmast 74, 150 kv-Lijn Leiden-Zoetermeer			
Part :	Mast 55			

D&C ENGINEERING

Check equal leg angle-members according to Eurocode 3, prEN 1993-1-1 : 2003

File prEN 1993-1-1.revB.xls d.d. 2-32012, JG

Check section: *CrossArm 5-6 Verticale verbanden1 L50x50x5* *M75*

Memberforces : **(Attention! pressure = "-" and tension ="+")**

Compression:	N_{Sd}	=	-13,65	kN	***Combined forces diagonal:***			
Tension:	N_{Sd}	=	13,63	kN	$N_{comb1;c;s;d}$ (min. Compr. or tension)	=	0	kN
	$F_{perpend.;s;d}$	=	0	kN	$N_{comb2;c;s;d}$ (max. compression)	=	0	kN

Angle profile : *H50/50/5* (*1)

h	=	50	mm	I_y	=	109643	mm^4
b	=	50	mm	$W_{y;el;eff.1}$	=	3049	mm^3
t_f	=	5	mm	$W_{y;el;eff.2}$	=	7811	mm^3
y_s	=	14,0	mm	i_y	=	15,1	mm
A_{bruto}	=	480	mm^2	i_v	=	9,6	mm

Material :

Mat. qual. Fe360 / Fe510	=	Fe360		Permissible stress $f_{y;d}$	=	235,0	N/mm^2

Geometry section and bolts:

$L_{y;cr}$	=	2162	mm	No. bolts / end / flange	=	1	
$L_{v;cr}$	=	2162	mm	Type of bolts M / "	=	16	
$L_{tot\ (with\ comb.\ buckling)}$	=	0	mm	End distance bolt e1	=	30	mm
$a*L_{tot\ (with\ comb.\ buckling)}$	=	0	mm	Centre-centre spacing bolt s1	=	60	mm
$L_{perpendicular\ force}$	=	969	mm	Edge distance bolt e2	=	25	mm
Position perpendicular force	=	1	(⌉=1, ⌋=2)	Boltquality 4.6/5.6/8.8/10.9	=	4,6	
Column profile?	=	1	no=1, yes=2	Rolled screw threads	=	1	
Thickness tie plate	=	8	mm	Dubble strap joint no=1, yes=2	=	1	

Summary checks :

1 - Check tension on member :

$UC_1 = N_{Ed} / N_{t.Rd}$ = **0,30** **< 1**

2 - Check perpendicular force on member :

$UC_2 = M_{Ed} / M_{c.Rd}$ = **n.v.t.** **< 1**

3 - Check of the member slenderness :

$UC_3 = C_{max;buc} / C_{perm}$ = **225** **< 200 or 240**

4 - Check stress in member due to compression without excentricity:

$UC_4 = N_{E;d} / (C_{max;buc} \times N_{b;Rd})$ = **n.v.t.** **< 1**

5 - Check stress in member due to compression with excentricity:

$UC_{5-1} = N_{E;d} / (C_{max;buc} \times N_{b;Rd})$ = **0,80** **< 1**

$UC_{5-2} = N_{E;d} / N_{b;Rd} + k_{yy} \times (M_{y;Ed} + DM_{y;Ed}) / (C_{LT} \times M_{y;Rk})$ = **1,00** **< 1**

6 - Check stress with combined buckling of two sections:

$UC_{5-1} = N_{E;d} / (C_{max;buc} \times N_{b;Rd})$ = **n.v.t.** **< 1**

$UC_{5-2} = N_{E;d} / N_{b;Rd} + k_{yy} \times (M_{y;Ed} + DM_{y;Ed}) / (C_{LT} \times M_{y;Rk})$ = **n.v.t.** **< 1**

7 - Check shear stress boltconnection:

$UC_7 = F_{v;Ed} / F_{v;Rd}$ = **0,45** **< 1**

8 - Check bearing stress boltconnection:

$UC_8 = F_{b;Ed} / F_{b;Rd}$ = **0,49** **< 1**

Remarks:

The maximum increase of stress or totalstress is(*2) : **$U.C_{max}$ = 1,00 = 100%**

(*1) Eventually, with the checks of the stresses, the cross-section reduction method is used according to prEN 1993-1-5

(*2) The total stress or increase of stress has been related to the permissible stress

Revision :	0	A	B	C	D	E	F
Date :	13-mrt-2012						
Name :	J Goddijn						
Checked :	J Boogert						

Order :	14509	**Dossier :**	13.039	**Berekening :**
Project :	Omleiding mast 52 tot 54 en noodmast 74, 150 kv-Lijn Leiden-Zoetermeer			
Part :	Mast 55			

D&C ENGINEERING

Check equal leg angle-members according to Eurocode 3, prEN 1993-1-1 : 2003

File prEN 1993-1-1.revB.xls d.d. 2-32012, JG

Check section: *CrossArm 5-6 Verticale verbanden2 L50x50x5* *M76*

Memberforces : **(Attention! pressure = "-" and tension ="+")**

Compression:	N_{Sd}	=	*-20,99*	kN	***Combined forces diagonal:***			
Tension:	N_{Sd}	=	*19,63*	kN	$N_{comb1;c;s;d}$ (min. Compr. or tension)	=	*0*	kN
	$F_{perpend.;s;d}$	=	*0*	kN	$N_{comb2;c;s;d}$ (max. compression)	=	*0*	kN

Angle profile : *H50/50/5* (*1)

h	=	*50*	mm	I_y	=	*109643*	mm^4
b	=	*50*	mm	$W_{y;el;eff.1}$	=	*3049*	mm^3
t_f	=	*5*	mm	$W_{y;el;eff.2}$	=	*7811*	mm^3
y_s	=	*14,0*	mm	i_y	=	*15,1*	mm
A_{bruto}	=	*480*	mm^2	i_v	=	*9,6*	mm

Material :

Mat. qual. Fe360 / Fe510	=	*Fe360*		Permissible stress $f_{y;d}$	=	*235,0*	N/mm^2

Geometry section and bolts:

$L_{y;cr}$	=	*2184*	mm	No. bolts / end / flange	=	*1*	
$L_{v;cr}$	=	*1155*	mm	Type of bolts M / "	=	*16*	
$L_{tot\ (with\ comb.\ buckling)}$	=	*0*	mm	End distance bolt e1	=	*30*	mm
$a*L_{tot\ (with\ comb.\ buckling)}$	=	*0*	mm	Centre-centre spacing bolt s1	=	*60*	mm
$L_{perpendicular\ force}$	=	*0*	mm	Edge distance bolt e2	=	*25*	mm
Position perpendicular force	=	*1*	(⌉=1, ⌋=2)	Boltquality 4.6/5.6/8.8/10.9	=	*4,6*	
Column profile?	=	*1*	no=1, yes=2	Rolled screw threads	=	*1*	
Thickness tie plate	=	*8*	mm	Dubble strap joint no=1, yes=2	=	*1*	

Summary checks :

1 - Check tension on member :

$UC_1 = N_{Ed} / N_{t.Rd}$ = **0,43** **< 1**

2 - Check perpendicular force on member :

$UC_2 = M_{Ed} / M_{c.Rd}$ = **n.v.t.** **< 1**

3 - Check of the member slenderness :

$UC_3 = C_{max;buc} / C_{perm}$ = **145** **< 200 or 240**

4 - Check stress in member due to compression without excentricity:

$UC_4 = N_{E;d} / (C_{max;buc} \times N_{b;Rd})$ = **n.v.t.** **< 1**

5 - Check stress in member due to compression with excentricity:

$UC_{5-1} = N_{E;d} / (C_{max;buc} \times N_{b;Rd})$ = **0,57** **< 1**

$UC_{5-2} = N_{E;d} / N_{b;Rd} + k_{yy} \times (M_{y;Ed} + DM_{y;Ed}) / (C_{LT} \times M_{y;Rk})$ = **0,95** **< 1**

6 - Check stress with combined buckling of two sections:

$UC_{5-1} = N_{E;d} / (C_{max;buc} \times N_{b;Rd})$ = **n.v.t.** **< 1**

$UC_{5-2} = N_{E;d} / N_{b;Rd} + k_{yy} \times (M_{y;Ed} + DM_{y;Ed}) / (C_{LT} \times M_{y;Rk})$ = **n.v.t.** **< 1**

7 - Check shear stress boltconnection:

$UC_7 = F_{v;Ed} / F_{v;Rd}$ = **0,70** **< 1**

8 - Check bearing stress boltconnection:

$UC_8 = F_{b;Ed} / F_{b;Rd}$ = **0,70** **< 1**

Remarks:

The maximum increase of stress or totalstress is(*2) : **$U.C_{max}$ = 0,95 = 95%**

(*1) Eventually, with the checks of the stresses, the cross-section reduction method is used according to prEN 1993-1-5

(*2) The total stress or increase of stress has been related to the permissible stress

Revision :	0	A	B	C	D	E	F
Date :	13-mrt-2012						
Name :	J Goddijn						
Checked :	J Boogert						

Order :	14509	**Dossier :**	13.039	**Berekening :**
Project :	Omleiding mast 52 tot 54 en noodmast 74, 150 kv-Lijn Leiden-Zoetermeer			
Part :	Mast 55			

D&C ENGINEERING

Check equal leg angle-members according to Eurocode 3, prEN 1993-1-1 : 2003

File prEN 1993-1-1.revB.xls d.d. 2-32012, JG

Check section: *Vak 1 Horizontale en Verticale Knikverkorters L70x70x7* *V06*

Memberforces : **(Attention! pressure = "-" and tension ="+")**

Compression:	N_{Sd}	=	*-23,73*	kN	***Combined forces diagonal:***			
Tension:	N_{Sd}	=	*23,73*	kN	$N_{comb1;c;s;d}$ (min. Compr. or tension)	=	*0*	kN
	$F_{perpend.;s;d}$	=	*1,5*	kN	$N_{comb2;c;s;d}$ (max. compression)	=	*0*	kN

Angle profile : *H70/70/7* (*1)

h	=	*70*	mm	I_y	=	*422977*	mm^4
b	=	*70*	mm	$W_{y;el;eff.1}$	=	*8411*	mm^3
t_f	=	*7*	mm	$W_{y;el;eff.2}$	=	*21457*	mm^3
y_s	=	*19,7*	mm	i_y	=	*21,2*	mm
A_{bruto}	=	*940*	mm^2	i_v	=	*13,5*	mm

Material :

Mat. qual. Fe360 / Fe510	=	*Fe510*		Permissible stress $f_{y;d}$	=	*355,0*	N/mm^2

Geometry section and bolts:

$L_{y;cr}$	=	*3322*	mm	No. bolts / end / flange	=	*1*	
$L_{v;cr}$	=	*3322*	mm	Type of bolts M / "	=	*16*	
$L_{tot\ (with\ comb.\ buckling)}$	=	*0*	mm	End distance bolt e1	=	*30*	mm
$a*L_{tot\ (with\ comb.\ buckling)}$	=	*0*	mm	Centre-centre spacing bolt s1	=	*50*	mm
$L_{perpendicular\ force}$	=	*3322*	mm	Edge distance bolt e2	=	*30*	mm
Position perpendicular force	=	*1*	(⌉=1, ⌋=2)	Boltquality 4.6/5.6/8.8/10.9	=	*8,8*	
Column profile?	=	*1*	no=1, yes=2	Rolled screw threads	=	*1*	
Thickness tie plate	=	*7*	mm	Dubble strap joint no=1, yes=2	=	*1*	

Summary checks :

1 - Check tension on member :

$UC_1 = N_{Ed} / N_{t.Rd}$ = **0,20** **< 1**

2 - Check perpendicular force on member :

$UC_2 = M_{Ed} / M_{c.Rd}$ = **0,42** **< 1**

3 - Check of the member slenderness :

$UC_3 = C_{max;buc} / C_{perm}$ = **246** **< 200 or 240**

4 - Check stress in member due to compression without excentricity:

$UC_4 = N_{E;d} / (C_{max;buc} \times N_{b;Rd})$ = **n.v.t.** **< 1**

5 - Check stress in member due to compression with excentricity:

$UC_{5-1} = N_{E;d} / (C_{max;buc} \times N_{b;Rd})$ = **0,82** **< 1**

$UC_{5-2} = N_{E;d} / N_{b;Rd} + k_{yy} \times (M_{y;Ed} + DM_{y;Ed}) / (C_{LT} \times M_{y;Rk})$ = **0,96** **< 1**

6 - Check stress with combined buckling of two sections:

$UC_{5-1} = N_{E;d} / (C_{max;buc} \times N_{b;Rd})$ = **n.v.t.** **< 1**

$UC_{5-2} = N_{E;d} / N_{b;Rd} + k_{yy} \times (M_{y;Ed} + DM_{y;Ed}) / (C_{LT} \times M_{y;Rk})$ = **n.v.t.** **< 1**

7 - Check shear stress boltconnection:

$UC_7 = F_{v;Ed} / F_{v;Rd}$ = **0,39** **< 1**

8 - Check bearing stress boltconnection:

$UC_8 = F_{b;Ed} / F_{b;Rd}$ = **0,37** **< 1**

Remarks:

The maximum increase of stress or totalstress is(*2) : **$U.C_{max}$ = 0,96 = 96%**

(*1) Eventually, with the checks of the stresses, the cross-section reduction method is used according to prEN 1993-1-5

(*2) The total stress or increase of stress has been related to the permissible stress

Revision :	0	A	B	C	D	E	F
Date :	13-mrt-2012						
Name :	J Goddijn						
Checked :	J Boogert						

Order	:	14509	**Dossier :**	13.039	**Berekening :**
Project	:	Omleiding mast 52 tot 54 en noodmast 74, 150 kv-Lijn Leiden-Zoetermeer			
Part	:	Mast 55			

D&C ENGINEERING

Check equal leg angle-members according to Eurocode 3, prEN 1993-1-1 : 2003

File prEN 1993-1-1.revB.xls d.d. 2-32012, JG

Check section: *Vak 2 Schuine Knikverkorters L70x70x7* *V09*

Memberforces : **(Attention! pressure = "-" and tension ="+")**

Compression:	N_{Sd}	=	*-28,83*	kN	***Combined forces diagonal:***			
Tension:	N_{Sd}	=	*28,83*	kN	$N_{comb1;c;s;d}$ (min. Compr. or tension)	=	*0*	kN
	$F_{perpend.;s;d}$	=	*0*	kN	$N_{comb2;c;s;d}$ (max. compression)	=	*0*	kN

Angle profile : *H70/70/7* (*1)

h	=	*70*	mm	I_y	=	*422977*	mm^4
b	=	*70*	mm	$W_{y;el;eff.1}$	=	*8411*	mm^3
t_f	=	*7*	mm	$W_{y;el;eff.2}$	=	*21457*	mm^3
y_s	=	*19,7*	mm	i_y	=	*21,2*	mm
A_{bruto}	=	*940*	mm^2	i_v	=	*13,5*	mm

Material :

Mat. qual. Fe360 / Fe510	=	*Fe510*		Permissible stress $f_{y;d}$	=	*355,0*	N/mm^2

Geometry section and bolts:

$L_{y;cr}$	=	*2620*	mm	No. bolts / end / flange	=	*1*	
$L_{v;cr}$	=	*2620*	mm	Type of bolts M / "	=	*16*	
L_{tot} (with comb. buckling)	=	*0*	mm	End distance bolt e1	=	*30*	mm
$a*L_{tot}$ (with comb. buckling)	=	*0*	mm	Centre-centre spacing bolt s1	=	*50*	mm
$L_{perpendicular\ force}$	=	*0*	mm	Edge distance bolt e2	=	*25*	mm
Position perpendicular force	=	*1*	(⌉=1, ⌋=2)	Boltquality 4.6/5.6/8.8/10.9	=	*8,8*	
Column profile?	=	*1*	no=1, yes=2	Rolled screw threads	=	*1*	
Thickness tie plate	=	*6*	mm	Dubble strap joint no=1, yes=2	=	*1*	

Summary checks :

1 - Check tension on member :

$UC_1 = N_{Ed} / N_{t.Rd}$ = **0,32** **< 1**

2 - Check perpendicular force on member :

$UC_2 = M_{Ed} / M_{c.Rd}$ = **n.v.t.** **< 1**

3 - Check of the member slenderness :

$UC_3 = C_{max;buc} / C_{perm}$ = **194** **< 200 or 240**

4 - Check stress in member due to compression without excentricity:

$UC_4 = N_{E;d} / (C_{max;buc} \times N_{b;Rd})$ = **n.v.t.** **< 1**

5 - Check stress in member due to compression with excentricity:

$UC_{5-1} = N_{E;d} / (C_{max;buc} \times N_{b;Rd})$ = **0,64** **< 1**

$UC_{5-2} = N_{E;d} / N_{b;Rd} + k_{yy} \times (M_{y;Ed} + DM_{y;Ed}) / (C_{LT} \times M_{y;Rk})$ = **0,80** **< 1**

6 - Check stress with combined buckling of two sections:

$UC_{5-1} = N_{E;d} / (C_{max;buc} \times N_{b;Rd})$ = **n.v.t.** **< 1**

$UC_{5-2} = N_{E;d} / N_{b;Rd} + k_{yy} \times (M_{y;Ed} + DM_{y;Ed}) / (C_{LT} \times M_{y;Rk})$ = **n.v.t.** **< 1**

7 - Check shear stress boltconnection:

$UC_7 = F_{v;Ed} / F_{v;Rd}$ = **0,48** **< 1**

8 - Check bearing stress boltconnection:

$UC_8 = F_{b;Ed} / F_{b;Rd}$ = **0,61** **< 1**

Remarks:

The maximum increase of stress or totalstress is(*2) : **$U.C_{max}$ = 0,80 = 80%**

(*1) Eventually, with the checks of the stresses, the cross-section reduction method is used according to prEN 1993-1-5

(*2) The total stress or increase of stress has been related to the permissible stress

Revision :	0	A	B	C	D	E	F
Date :	13-mrt-2012						
Name :	J Goddijn						
Checked :	J Boogert						

Order :	14509	**Dossier :**	13.039	**Berekening :**
Project :	Omleiding mast 52 tot 54 en noodmast 74, 150 kv-Lijn Leiden-Zoetermeer			
Part :	Mast 55			

D&C ENGINEERING

Check equal leg angle-members according to Eurocode 3, prEN 1993-1-1 : 2003

File prEN 1993-1-1.revB.xls d.d. 2-32012, JG

Check section: *Vak 5 Verticale Knikverkorters L55x55x6* *V21*

Memberforces : **(Attention! pressure = "-" and tension ="+")**

Compression:	N_{Sd}	=	*-29,39*	kN	***Combined forces diagonal:***			
Tension:	N_{Sd}	=	*29,39*	kN	$N_{comb1;c;s;d}$ (min. Compr. or tension)	=	*0*	kN
	$F_{perpend.;s;d}$	=	*0*	kN	$N_{comb2;c;s;d}$ (max. compression)	=	*0*	kN

Angle profile : *H55/55/6* (*1)

h	=	*55*	mm	I_y	=	*172872*	mm^4
b	=	*55*	mm	$W_{y;el;eff.1}$	=	*4391*	mm^3
t_f	=	*6*	mm	$W_{y;el;eff.2}$	=	*11060*	mm^3
y_s	=	*15,6*	mm	i_y	=	*16,6*	mm
A_{bruto}	=	*631*	mm^2	i_v	=	*10,5*	mm

Material :

Mat. qual. Fe360 / Fe510	=	*Fe510*		Permissible stress $f_{y;d}$	=	*355,0*	N/mm^2

Geometry section and bolts:

$L_{y;cr}$	=	*1720*	mm	No. bolts / end / flange		=	*1*	
$L_{v;cr}$	=	*1720*	mm	Type of bolts	M / "	=	*16*	
$L_{tot\ (with\ comb.\ buckling)}$	=	*0*	mm	End distance bolt	e1	=	*30*	mm
$a*L_{tot\ (with\ comb.\ buckling)}$	=	*0*	mm	Centre-centre spacing bolt	s1	=	*50*	mm
$L_{perpendicular\ force}$	=	*0*	mm	Edge distance bolt	e2	=	*25*	mm
Position perpendicular force	=	*1*	(⌉=1, ⌋=2)	Boltquality	4.6/5.6/8.8/10.9	=	*8,8*	
Column profile?	=	*1*	no=1, yes=2	Rolled screw threads		=	*1*	
Thickness tie plate	=	*12*	mm	Dubble strap joint no=1, yes=2		=	*1*	

Summary checks :

1 - Check tension on member :

$UC_1 = N_{Ed} / N_{t.Rd}$ = **0,38** **< 1**

2 - Check perpendicular force on member :

$UC_2 = M_{Ed} / M_{c.Rd}$ = **n.v.t.** **< 1**

3 - Check of the member slenderness :

$UC_3 = C_{max;buc} / C_{perm}$ = **163** **< 200 or 240**

4 - Check stress in member due to compression without excentricity:

$UC_4 = N_{E;d} / (C_{max;buc} \times N_{b;Rd})$ = **n.v.t.** **< 1**

5 - Check stress in member due to compression with excentricity:

$UC_{5-1} = N_{E;d} / (C_{max;buc} \times N_{b;Rd})$ = **0,70** **< 1**

$UC_{5-2} = N_{E;d} / N_{b;Rd} + k_{yy} \times (M_{y;Ed} + DM_{y;Ed}) / (C_{LT} \times M_{y;Rk})$ = **0,93** **< 1**

6 - Check stress with combined buckling of two sections:

$UC_{5-1} = N_{E;d} / (C_{max;buc} \times N_{b;Rd})$ = **n.v.t.** **< 1**

$UC_{5-2} = N_{E;d} / N_{b;Rd} + k_{yy} \times (M_{y;Ed} + DM_{y;Ed}) / (C_{LT} \times M_{y;Rk})$ = **n.v.t.** **< 1**

7 - Check shear stress boltconnection:

$UC_7 = F_{v;Ed} / F_{v;Rd}$ = **0,49** **< 1**

8 - Check bearing stress boltconnection:

$UC_8 = F_{b;Ed} / F_{b;Rd}$ = **0,62** **< 1**

Remarks:

The maximum increase of stress or totalstress is(*2) : **$U.C_{max}$ = 0,93 = 93%**

(*1) Eventually, with the checks of the stresses, the cross-section reduction method is used according to prEN 1993-1-5

(*2) The total stress or increase of stress has been related to the permissible stress

Revision :	0	A	B	C	D	E	F
Date :	13-mrt-2012						
Name :	J Goddijn						
Checked :	J Boogert						

Order :	14509	**Dossier :**	13.039	**Berekening :**
Project :	Omleiding mast 52 tot 54 en noodmast 74, 150 kv-Lijn Leiden-Zoetermeer			
Part :	Mast 55			

D&C ENGINEERING

Check equal leg angle-members according to Eurocode 3, prEN 1993-1-1 : 2003

File prEN 1993-1-1.revB.xls d.d. 2-32012, JG

Check section: *Vak 8-9-10-13-14 Verticale Knikverkorters L55x55x6* *V31*

Memberforces : **(Attention! pressure = "-" and tension ="+")**

Compression:	N_{Sd}	=	*-17,33*	kN	***Combined forces diagonal:***			
Tension:	N_{Sd}	=	*16,47*	kN	$N_{comb1;c;s;d}$ (min. Compr. or tension)	=	*0*	kN
	$F_{perpend.;s;d}$	=	*0*	kN	$N_{comb2;c;s;d}$ (max. compression)	=	*0*	kN

Angle profile : *H55/55/6* (*1)

h	=	*55*	mm	I_y	=	*172872*	mm^4
b	=	*55*	mm	$W_{y;el;eff.1}$	=	*4391*	mm^3
t_f	=	*6*	mm	$W_{y;el;eff.2}$	=	*11060*	mm^3
y_s	=	*15,6*	mm	i_y	=	*16,6*	mm
A_{bruto}	=	*631*	mm^2	i_v	=	*10,5*	mm

Material :

Mat. qual. Fe360 / Fe510	=	*Fe510*		Permissible stress $f_{y;d}$	=	*355,0*	N/mm^2

Geometry section and bolts:

$L_{y;cr}$	=	*2050*	mm	No. bolts / end / flange		=	*1*	
$L_{v;cr}$	=	*2050*	mm	Type of bolts	M / "	=	*16*	
$L_{tot\ (with\ comb.\ buckling)}$	=	*0*	mm	End distance bolt	e1	=	*30*	mm
$a*L_{tot\ (with\ comb.\ buckling)}$	=	*0*	mm	Centre-centre spacing bolt	s1	=	*50*	mm
$L_{perpendicular\ force}$	=	*0*	mm	Edge distance bolt	e2	=	*25*	mm
Position perpendicular force	=	*1*	(⌉=1, ⌋=2)	Boltquality	4.6/5.6/8.8/10.9	=	*8,8*	
Column profile?	=	*1*	no=1, yes=2	Rolled screw threads		=	*1*	
Thickness tie plate	=	*5*	mm	Dubble strap joint no=1, yes=2		=	*1*	

Summary checks :

1 - Check tension on member :

$UC_1 = N_{Ed} / N_{t.Rd}$ = **0,21** **< 1**

2 - Check perpendicular force on member :

$UC_2 = M_{Ed} / M_{c.Rd}$ = **n.v.t.** **< 1**

3 - Check of the member slenderness :

$UC_3 = C_{max;buc} / C_{perm}$ = **194** **< 200 or 240**

4 - Check stress in member due to compression without excentricity:

$UC_4 = N_{E;d} / (C_{max;buc} \times N_{b;Rd})$ = **n.v.t.** **< 1**

5 - Check stress in member due to compression with excentricity:

$UC_{5-1} = N_{E;d} / (C_{max;buc} \times N_{b;Rd})$ = **0,57** **< 1**

$UC_{5-2} = N_{E;d} / N_{b;Rd} + k_{yy} \times (M_{y;Ed} + DM_{y;Ed}) / (C_{LT} \times M_{y;Rk})$ = **0,72** **< 1**

6 - Check stress with combined buckling of two sections:

$UC_{5-1} = N_{E;d} / (C_{max;buc} \times N_{b;Rd})$ = **n.v.t.** **< 1**

$UC_{5-2} = N_{E;d} / N_{b;Rd} + k_{yy} \times (M_{y;Ed} + DM_{y;Ed}) / (C_{LT} \times M_{y;Rk})$ = **n.v.t.** **< 1**

7 - Check shear stress boltconnection:

$UC_7 = F_{v;Ed} / F_{v;Rd}$ = **0,29** **< 1**

8 - Check bearing stress boltconnection:

$UC_8 = F_{b;Ed} / F_{b;Rd}$ = **0,41** **< 1**

Remarks:

The maximum increase of stress or totalstress is(*2) : **$U.C_{max}$ = 0,72 = 72%**

(*1) Eventually, with the checks of the stresses, the cross-section reduction method is used according to prEN 1993-1-5

(*2) The total stress or increase of stress has been related to the permissible stress

Revision :	0	A	B	C	D	E	F
Date :	13-mrt-2012						
Name :	J Goddijn						
Checked :	J Boogert						

Order :	14509	**Dossier :**	13.039	**Berekening :**
Project :	Omleiding mast 52 tot 54 en noodmast 74, 150 kv-Lijn Leiden-Zoetermeer			
Part :	Mast 55			

D&C ENGINEERING

Check equal leg angle-members according to Eurocode 3, prEN 1993-1-1 : 2003

File prEN 1993-1-1.revB.xls d.d. 2-32012, JG

Check section: *HorVerb1 Staven L150x150x10* *V56*

Memberforces : **(Attention! pressure = "-" and tension ="+")**

Compression:	N_{Sd}	=	*-10,6*	kN	***Combined forces diagonal:***			
Tension:	N_{Sd}	=	*8,57*	kN	$N_{comb1;c;s;d}$ (min. Compr. or tension)	=	*0*	kN
	$F_{perpend.;s;d}$	=	*1,5*	kN	$N_{comb2;c;s;d}$ (max. compression)	=	*0*	kN

Angle profile : *H150/150/10* (*1)

h	=	*150*	mm	I_y	=	*3031455*	mm^4
b	=	*150*	mm	$W_{y;el;eff.1}$	=	*35598*	mm^3
t_f	=	*10*	mm	$W_{y;el;eff.2}$	=	*92730*	mm^3
y_s	=	*32,7*	mm	i_y	=	*36,2*	mm
A_{bruto}	=	*2312*	mm^2	i_v	=	*23,2*	mm

Material :

Mat. qual. Fe360 / Fe510	=	*Fe510*		Permissible stress $f_{y;d}$	=	*355,0*	N/mm^2

Geometry section and bolts:

$L_{y;cr}$	=	*5374*	mm	No. bolts / end / flange		=	*2*	
$L_{v;cr}$	=	*5374*	mm	Type of bolts	M / "	=	*20*	
$L_{tot\ (with\ comb.\ buckling)}$	=	*0*	mm	End distance bolt	e1	=	*35*	mm
$a*L_{tot\ (with\ comb.\ buckling)}$	=	*0*	mm	Centre-centre spacing bolt	s1	=	*70*	mm
$L_{perpendicular\ force}$	=	*5374*	mm	Edge distance bolt	e2	=	*35*	mm
Position perpendicular force	=	*1*	(⌉=1, ⌋=2)	Boltquality	4.6/5.6/8.8/10.9	=	*8,8*	
Column profile?	=	*1*	no=1, yes=2	Rolled screw threads		=	*1*	
Thickness tie plate	=	*8*	mm	Dubble strap joint no=1, yes=2		=	*1*	

Summary checks :

1 - Check tension on member :

$UC_1 = N_{Ed} / N_{t.Rd}$ = **0,02** **< 1**

2 - Check perpendicular force on member :

$UC_2 = M_{Ed} / M_{c.Rd}$ = **0,16** **< 1**

3 - Check of the member slenderness :

$UC_3 = C_{max;buc} / C_{perm}$ = **232** **< 200 or 240**

4 - Check stress in member due to compression without excentricity:

$UC_4 = N_{E;d} / (C_{max;buc} \times N_{b;Rd})$ = **0,09** **< 1**

5 - Check stress in member due to compression with excentricity:

$UC_{5-1} = N_{E;d} / (C_{max;buc} \times N_{b;Rd})$ = **n.v.t.** **< 1**

$UC_{5-2} = N_{E;d} / N_{b;Rd} + k_{yy} \times (M_{y;Ed} + DM_{y;Ed}) / (C_{LT} \times M_{y;Rk})$ = **n.v.t.** **< 1**

6 - Check stress with combined buckling of two sections:

$UC_{5-1} = N_{E;d} / (C_{max;buc} \times N_{b;Rd})$ = **n.v.t.** **< 1**

$UC_{5-2} = N_{E;d} / N_{b;Rd} + k_{yy} \times (M_{y;Ed} + DM_{y;Ed}) / (C_{LT} \times M_{y;Rk})$ = **n.v.t.** **< 1**

7 - Check shear stress boltconnection:

$UC_7 = F_{v;Ed} / F_{v;Rd}$ = **0,06** **< 1**

8 - Check bearing stress boltconnection:

$UC_8 = F_{b;Ed} / F_{b;Rd}$ = **0,05** **< 1**

Remarks:

The maximum increase of stress or totalstress is(*2) : **$U.C_{max}$ = 0,16 = 16%**

(*1) Eventually, with the checks of the stresses, the cross-section reduction method is used according to prEN 1993-1-5

(*2) The total stress or increase of stress has been related to the permissible stress

Revision :	0	A	B	C	D	E	F
Date :	13-mrt-2012						
Name :	J Goddijn						
Checked :	J Boogert						

Order :	14509	**Dossier :**	13.039	**Berekening :**
Project :	Omleiding mast 52 tot 54 en noodmast 74, 150 kv-Lijn Leiden-Zoetermeer			
Part :	Mast 55			

D&C ENGINEERING

Check equal leg angle-members according to Eurocode 3, prEN 1993-1-1 : 2003

File prEN 1993-1-1.revB.xls d.d. 2-32012, JG

Check section: *HorVerb1 Staven L75x75x8* *V57*

Memberforces : **(Attention! pressure = "-" and tension ="+")**

Compression:	N_{Sd}	=	*-1,81*	kN	***Combined forces diagonal:***			
Tension:	N_{Sd}	=	*1,81*	kN	$N_{comb1;c;s;d}$ (min. Compr. or tension)	=	*0*	kN
	$F_{perpend.;s;d}$	=	*1,5*	kN	$N_{comb2;c;s;d}$ (max. compression)	=	*0*	kN

Angle profile : *H75/75/8* (*1)

h	=	*75*	mm	I_y	=	*588737*	mm^4
b	=	*75*	mm	$W_{y;el;eff.1}$	=	*10964*	mm^3
t_f	=	*8*	mm	$W_{y;el;eff.2}$	=	*27635*	mm^3
y_s	=	*21,3*	mm	i_y	=	*22,7*	mm
A_{bruto}	=	*1147*	mm^2	i_v	=	*14,4*	mm

Material :

Mat. qual. Fe360 / Fe510	=	*Fe510*		Permissible stress $f_{y;d}$	=	*355,0*	N/mm^2

Geometry section and bolts:

$L_{y;cr}$	=	*3800*	mm	No. bolts / end / flange	=	*1*	
$L_{v;cr}$	=	*3800*	mm	Type of bolts M / "	=	*16*	
$L_{tot\ (with\ comb.\ buckling)}$	=	*0*	mm	End distance bolt e1	=	*30*	mm
$a*L_{tot\ (with\ comb.\ buckling)}$	=	*0*	mm	Centre-centre spacing bolt s1	=	*50*	mm
$L_{perpendicular\ force}$	=	*7600*	mm	Edge distance bolt e2	=	*40*	mm
Position perpendicular force	=	*1*	(⌉=1, ⌋=2)	Boltquality 4.6/5.6/8.8/10.9	=	*8,8*	
Column profile?	=	*1*	no=1, yes=2	Rolled screw threads	=	*1*	
Thickness tie plate	=	*8*	mm	Dubble strap joint no=1, yes=2	=	*1*	

Summary checks :

1 - Check tension on member :

$UC_1 = N_{Ed} / N_{t.Rd}$ = **0,01** **< 1**

2 - Check perpendicular force on member :

$UC_2 = M_{Ed} / M_{c.Rd}$ = **0,73** **< 1**

3 - Check of the member slenderness :

$UC_3 = C_{max;buc} / C_{perm}$ = **263** **< 200 or 240**

4 - Check stress in member due to compression without excentricity:

$UC_4 = N_{E;d} / (C_{max;buc} \times N_{b;Rd})$ = **n.v.t.** **< 1**

5 - Check stress in member due to compression with excentricity:

$UC_{5-1} = N_{E;d} / (C_{max;buc} \times N_{b;Rd})$ = **0,06** **< 1**

$UC_{5-2} = N_{E;d} / N_{b;Rd} + k_{yy} \times (M_{y;Ed} + DM_{y;Ed}) / (C_{LT} \times M_{y;Rk})$ = **0,07** **< 1**

6 - Check stress with combined buckling of two sections:

$UC_{5-1} = N_{E;d} / (C_{max;buc} \times N_{b;Rd})$ = **n.v.t.** **< 1**

$UC_{5-2} = N_{E;d} / N_{b;Rd} + k_{yy} \times (M_{y;Ed} + DM_{y;Ed}) / (C_{LT} \times M_{y;Rk})$ = **n.v.t.** **< 1**

7 - Check shear stress boltconnection:

$UC_7 = F_{v;Ed} / F_{v;Rd}$ = **0,03** **< 1**

8 - Check bearing stress boltconnection:

$UC_8 = F_{b;Ed} / F_{b;Rd}$ = **0,02** **< 1**

Remarks:

The maximum increase of stress or totalstress is(*2) : **$U.C_{max}$ = 0,73 = 73%**

(*1) Eventually, with the checks of the stresses, the cross-section reduction method is used according to prEN 1993-1-5

(*2) The total stress or increase of stress has been related to the permissible stress

Revision :	0	A	B	C	D	E	F
Date :	13-mrt-2012						
Name :	J Goddijn						
Checked :	J Boogert						

Order :	14509	**Dossier :**	13.039	**Berekening :**
Project :	Omleiding mast 52 tot 54 en noodmast 74, 150 kv-Lijn Leiden-Zoetermeer			
Part :	Mast 55			

D&C ENGINEERING

Check equal leg angle-members according to Eurocode 3, prEN 1993-1-1 : 2003

File prEN 1993-1-1.revB.xls d.d. 2-32012, JG

Check section: *HorVerb2 Staven L75x75x8* *V60*

Memberforces : **(Attention! pressure = "-" and tension ="+")**

Compression:	N_{Sd}	=	*-0,27*	kN	***Combined forces diagonal:***			
Tension:	N_{Sd}	=	*0,08*	kN	$N_{comb1;c;s;d}$ (min. Compr. or tension)	=	*0*	kN
	$F_{perpend.;s;d}$	=	*1,5*	kN	$N_{comb2;c;s;d}$ (max. compression)	=	*0*	kN

Angle profile : *H75/75/8* (*1)

h	=	*75*	mm	I_y	=	*588737*	mm^4
b	=	*75*	mm	$W_{y;el;eff.1}$	=	*10964*	mm^3
t_f	=	*8*	mm	$W_{y;el;eff.2}$	=	*27635*	mm^3
y_s	=	*21,3*	mm	i_y	=	*22,7*	mm
A_{bruto}	=	*1147*	mm^2	i_v	=	*14,4*	mm

Material :

Mat. qual. Fe360 / Fe510	=	*Fe510*		Permissible stress $f_{y;d}$	=	*355,0*	N/mm^2

Geometry section and bolts:

$L_{y;cr}$	=	*3353*	mm	No. bolts / end / flange	=	*4*	
$L_{v;cr}$	=	*3353*	mm	Type of bolts M / "	=	*24*	
$L_{tot\ (with\ comb.\ buckling)}$	=	*0*	mm	End distance bolt e1	=	*50*	mm
$a*L_{tot\ (with\ comb.\ buckling)}$	=	*0*	mm	Centre-centre spacing bolt s1	=	*90*	mm
$L_{perpendicular\ force}$	=	*6707*	mm	Edge distance bolt e2	=	*40*	mm
Position perpendicular force	=	*1*	(⌉=1, ⌋=2)	Boltquality 4.6/5.6/8.8/10.9	=	*8,8*	
Column profile?	=	*1*	no=1, yes=2	Rolled screw threads	=	*1*	
Thickness tie plate	=	*12*	mm	Dubble strap joint no=1, yes=2	=	*1*	

Summary checks :

1 - Check tension on member :

$UC_1 = N_{Ed} / N_{t.Rd}$ = **0,00** **< 1**

2 - Check perpendicular force on member :

$UC_2 = M_{Ed} / M_{c.Rd}$ = **0,65** **< 1**

3 - Check of the member slenderness :

$UC_3 = C_{max;buc} / C_{perm}$ = **232** **< 200 or 240**

4 - Check stress in member due to compression without excentricity:

$UC_4 = N_{E;d} / (C_{max;buc} \times N_{b;Rd})$ = **0,00** **< 1**

5 - Check stress in member due to compression with excentricity:

$UC_{5-1} = N_{E;d} / (C_{max;buc} \times N_{b;Rd})$ = **n.v.t.** **< 1**

$UC_{5-2} = N_{E;d} / N_{b;Rd} + k_{yy} \times (M_{y;Ed} + DM_{y;Ed}) / (C_{LT} \times M_{y;Rk})$ = **n.v.t.** **< 1**

6 - Check stress with combined buckling of two sections:

$UC_{5-1} = N_{E;d} / (C_{max;buc} \times N_{b;Rd})$ = **n.v.t.** **< 1**

$UC_{5-2} = N_{E;d} / N_{b;Rd} + k_{yy} \times (M_{y;Ed} + DM_{y;Ed}) / (C_{LT} \times M_{y;Rk})$ = **n.v.t.** **< 1**

7 - Check shear stress boltconnection:

$UC_7 = F_{v;Ed} / F_{v;Rd}$ = **0,00** **< 1**

8 - Check bearing stress boltconnection:

$UC_8 = F_{b;Ed} / F_{b;Rd}$ = **0,00** **< 1**

Remarks:

The maximum increase of stress or totalstress is(*2) : **$U.C_{max}$ = 0,65 = 65%**

(*1) Eventually, with the checks of the stresses, the cross-section reduction method is used according to prEN 1993-1-5

(*2) The total stress or increase of stress has been related to the permissible stress

Revision :	0	A	B	C	D	E	F
Date :	13-mrt-2012						
Name :	J Goddijn						
Checked :	J Boogert						

Order :	14509	**Dossier :**	13.039	**Berekening :**
Project :	Omleiding mast 52 tot 54 en noodmast 74, 150 kv-Lijn Leiden-Zoetermeer			
Part :	Mast 55			

Check equal leg angle-members according to Eurocode 3, prEN 1993-1-1 : 2003

File prEN 1993-1-1.revB.xls d.d. 2-32012, JG

Check section: *HorVerb3 Staven L90x90x9* *V62*

Memberforces : **(Attention! pressure = "-" and tension ="+")**

Compression:	N_{Sd}	=	*-50,62*	kN	***Combined forces diagonal:***			
Tension:	N_{Sd}	=	*49,64*	kN	$N_{comb1;c;s;d}$ (min. Compr. or tension)	=	*0*	kN
	$F_{perpend.;s;d}$	=	*1,5*	kN	$N_{comb2;c;s;d}$ (max. compression)	=	*0*	kN

Angle profile : *H90/90/9* (*1)

h	=	*90*	mm	I_y	=	*1158332*	mm^4
b	=	*90*	mm	$W_{y;el;eff.1}$	=	*17927*	mm^3
t_f	=	*9*	mm	$W_{y;el;eff.2}$	=	*45626*	mm^3
y_s	=	*25,4*	mm	i_y	=	*27,3*	mm
A_{bruto}	=	*1552*	mm^2	i_v	=	*17,4*	mm

Material :

Mat. qual. Fe360 / Fe510	=	*Fe360*		Permissible stress $f_{y;d}$	=	*235,0*	N/mm^2

Geometry section and bolts:

$L_{y;cr}$	=	*3536*	mm	No. bolts / end / flange		=	*1*	
$L_{v;cr}$	=	*3536*	mm	Type of bolts	M / "	=	*20*	
$L_{tot\ (with\ comb.\ buckling)}$	=	*0*	mm	End distance bolt	e1	=	*35*	mm
$a*L_{tot\ (with\ comb.\ buckling)}$	=	*0*	mm	Centre-centre spacing bolt	s1	=	*70*	mm
$L_{perpendicular\ force}$	=	*3536*	mm	Edge distance bolt	e2	=	*35*	mm
Position perpendicular force	=	*1*	(⌉=1, ⌋=2)	Boltquality	4.6/5.6/8.8/10.9	=	*8,8*	
Column profile?	=	*1*	no=1, yes=2	Rolled screw threads		=	*1*	
Thickness tie plate	=	*10*	mm	Dubble strap joint no=1, yes=2		=	*1*	

Summary checks :

1 - Check tension on member :

$UC_1 = N_{Ed} / N_{t.Rd}$ = **0,40** **< 1**

2 - Check perpendicular force on member :

$UC_2 = M_{Ed} / M_{c.Rd}$ = **0,31** **< 1**

3 - Check of the member slenderness :

$UC_3 = C_{max;buc} / C_{perm}$ = **203** **< 200 or 240**

4 - Check stress in member due to compression without excentricity:

$UC_4 = N_{E;d} / (C_{max;buc} \times N_{b;Rd})$ = **n.v.t.** **< 1**

5 - Check stress in member due to compression with excentricity:

$UC_{5-1} = N_{E;d} / (C_{max;buc} \times N_{b;Rd})$ = **0,76** **< 1**

$UC_{5-2} = N_{E;d} / N_{b;Rd} + k_{yy} \times (M_{y;Ed} + DM_{y;Ed}) / (C_{LT} \times M_{y;Rk})$ = **0,99** **< 1**

6 - Check stress with combined buckling of two sections:

$UC_{5-1} = N_{E;d} / (C_{max;buc} \times N_{b;Rd})$ = **n.v.t.** **< 1**

$UC_{5-2} = N_{E;d} / N_{b;Rd} + k_{yy} \times (M_{y;Ed} + DM_{y;Ed}) / (C_{LT} \times M_{y;Rk})$ = **n.v.t.** **< 1**

7 - Check shear stress boltconnection:

$UC_7 = F_{v;Ed} / F_{v;Rd}$ = **0,54** **< 1**

8 - Check bearing stress boltconnection:

$UC_8 = F_{b;Ed} / F_{b;Rd}$ = **0,72** **< 1**

Remarks:

The maximum increase of stress or totalstress is(*2) : **$U.C_{max}$ = 0,99 = 99%**

(*1) Eventually, with the checks of the stresses, the cross-section reduction method is used according to prEN 1993-1-5

(*2) The total stress or increase of stress has been related to the permissible stress

Revision :	0	A	B	C	D	E	F
Date :	13-mrt-2012						
Name :	J Goddijn						
Checked :	J Boogert						

Order	:	14509	**Dossier :**	13.039	**Berekening :**
Project	:	Omleiding mast 52 tot 54 en noodmast 74, 150 kv-Lijn Leiden-Zoetermeer			
Part	:	Mast 55			

D&C ENGINEERING

Check equal leg angle-members according to Eurocode 3, prEN 1993-1-1 : 2003

File prEN 1993-1-1.revB.xls d.d. 2-32012, JG

Check section: *CrossArm 1-2 Schuine verbanden L60x60x6* *V69*

Memberforces : **(Attention! pressure = "-" and tension ="+")**

Compression:	N_{Sd}	=	*0*	kN	***Combined forces diagonal:***			
Tension:	N_{Sd}	=	*65,96*	kN	$N_{comb1;c;s;d}$ (min. Compr. or tension)	=	*0*	kN
	$F_{perpend.;s;d}$	=	*0*	kN	$N_{comb2;c;s;d}$ (max. compression)	=	*0*	kN

Angle profile : *H80/80/8* (*1)

h	=	*80*	mm	I_y	=	*722469*	mm^4
b	=	*80*	mm	$W_{y;el;eff.1}$	=	*12576*	mm^3
t_f	=	*8*	mm	$W_{y;el;eff.2}$	=	*32038*	mm^3
y_s	=	*22,6*	mm	i_y	=	*24,3*	mm
A_{bruto}	=	*1227*	mm^2	i_v	=	*15,4*	mm

Material :

Mat. qual. Fe360 / Fe510	=	*Fe360*		Permissible stress $f_{y;d}$	=	*235,0*	N/mm^2

Geometry section and bolts:

$L_{y;cr}$	=	*4190*	mm	No. bolts / end / flange	=	*2*	
$L_{v;cr}$	=	*2445*	mm	Type of bolts M / "	=	*16*	
$L_{tot\ (with\ comb.\ buckling)}$	=	*0*	mm	End distance bolt e1	=	*30*	mm
$a*L_{tot\ (with\ comb.\ buckling)}$	=	*0*	mm	Centre-centre spacing bolt s1	=	*60*	mm
$L_{perpendicular\ force}$	=	*0*	mm	Edge distance bolt e2	=	*25*	mm
Position perpendicular force	=	*1*	(⌉=1, ⌋=2)	Boltquality 4.6/5.6/8.8/10.9	=	*8,8*	
Column profile?	=	*1*	no=1, yes=2	Rolled screw threads	=	*1*	
Thickness tie plate	=	*8*	mm	Dubble strap joint no=1, yes=2	=	*1*	

Summary checks :

1 - Check tension on member :

$UC_1 = N_{Ed} / N_{t.Rd}$ = **0,42** **< 1**

2 - Check perpendicular force on member :

$UC_2 = M_{Ed} / M_{c.Rd}$ = **n.v.t.** **< 1**

3 - Check of the member slenderness :

$UC_3 = C_{max;buc} / C_{perm}$ = **173** **< 200 or 240**

4 - Check stress in member due to compression without excentricity:

$UC_4 = N_{E;d} / (C_{max;buc} \times N_{b;Rd})$ = **0,00** **< 1**

5 - Check stress in member due to compression with excentricity:

$UC_{5-1} = N_{E;d} / (C_{max;buc} \times N_{b;Rd})$ = **n.v.t.** **< 1**

$UC_{5-2} = N_{E;d} / N_{b;Rd} + k_{yy} \times (M_{y;Ed} + DM_{y;Ed}) / (C_{LT} \times M_{y;Rk})$ = **n.v.t.** **< 1**

6 - Check stress with combined buckling of two sections:

$UC_{5-1} = N_{E;d} / (C_{max;buc} \times N_{b;Rd})$ = **n.v.t.** **< 1**

$UC_{5-2} = N_{E;d} / N_{b;Rd} + k_{yy} \times (M_{y;Ed} + DM_{y;Ed}) / (C_{LT} \times M_{y;Rk})$ = **n.v.t.** **< 1**

7 - Check shear stress boltconnection:

$UC_7 = F_{v;Ed} / F_{v;Rd}$ = **0,55** **< 1**

8 - Check bearing stress boltconnection:

$UC_8 = F_{b;Ed} / F_{b;Rd}$ = **0,74** **< 1**

Remarks:

The maximum increase of stress or totalstress is(*2) : **$U.C_{max}$ = 0,74 = 74%**

(*1) Eventually, with the checks of the stresses, the cross-section reduction method is used according to prEN 1993-1-5

(*2) The total stress or increase of stress has been related to the permissible stress

Revision :	0	A	B	C	D	E	F
Date :	13-mrt-2012						
Name :	J Goddijn						
Checked :	J Boogert						

Order :	14509	**Dossier :**	13.039	**Berekening :**
Project :	Omleiding mast 52 tot 54 en noodmast 74, 150 kv-Lijn Leiden-Zoetermeer			
Part :	Mast 55			

D&C ENGINEERING

Check equal leg angle-members according to Eurocode 3, prEN 1993-1-1 : 2003

File prEN 1993-1-1.revB.xls d.d. 2-32012, JG

Check section: *CrossArm 5-6 Randen L80x80x8* *V72*

Memberforces : **(Attention! pressure = "-" and tension ="+")**

Compression:	N_{Sd}	=	*-115,31*	kN	***Combined forces diagonal:***			
Tension:	N_{Sd}	=	*81,75*	kN	$N_{comb1;c;s;d}$ (min. Compr. or tension)	=	*0*	kN
	$F_{perpend.;s;d}$	=	*0*	kN	$N_{comb2;c;s;d}$ (max. compression)	=	*0*	kN

Angle profile : *H80/80/8* (*1)

h	=	*80*	mm	I_y	=	*722469*	mm^4
b	=	*80*	mm	$W_{y;el;eff.1}$	=	*12576*	mm^3
t_f	=	*8*	mm	$W_{y;el;eff.2}$	=	*32038*	mm^3
y_s	=	*22,6*	mm	i_y	=	*24,3*	mm
A_{bruto}	=	*1227*	mm^2	i_v	=	*15,4*	mm

Material :

Mat. qual. Fe360 / Fe510	=	*Fe360*		Permissible stress $f_{y;d}$	=	*235,0*	N/mm^2

Geometry section and bolts:

$L_{y;cr}$	=	*2008*	mm	No. bolts / end / flange	=	*2*	
$L_{v;cr}$	=	*2008*	mm	Type of bolts M / "	=	*20*	
L_{tot} (with comb. buckling)	=	*0*	mm	End distance bolt e1	=	*40*	mm
$a*L_{tot}$ (with comb. buckling)	=	*0*	mm	Centre-centre spacing bolt s1	=	*73*	mm
$L_{perpendicular\ force}$	=	*0*	mm	Edge distance bolt e2	=	*25*	mm
Position perpendicular force	=	*1*	(⌉=1, ⌋=2)	Boltquality 4.6/5.6/8.8/10.9	=	*8,8*	
Column profile?	=	*1*	no=1, yes=2	Rolled screw threads	=	*1*	
Thickness tie plate	=	*10*	mm	Dubble strap joint no=1, yes=2	=	*1*	

Summary checks :

1 - Check tension on member :

$UC_1 = N_{Ed} / N_{t.Rd}$ = **0,54** **< 1**

2 - Check perpendicular force on member :

$UC_2 = M_{Ed} / M_{c.Rd}$ = **n.v.t.** **< 1**

3 - Check of the member slenderness :

$UC_3 = C_{max;buc} / C_{perm}$ = **130** **< 200 or 240**

4 - Check stress in member due to compression without excentricity:

$UC_4 = N_{E;d} / (C_{max;buc} \times N_{b;Rd})$ = **0,96** **< 1**

5 - Check stress in member due to compression with excentricity:

$UC_{5-1} = N_{E;d} / (C_{max;buc} \times N_{b;Rd})$ = **n.v.t.** **< 1**

$UC_{5-2} = N_{E;d} / N_{b;Rd} + k_{yy} \times (M_{y;Ed} + DM_{y;Ed}) / (C_{LT} \times M_{y;Rk})$ = **n.v.t.** **< 1**

6 - Check stress with combined buckling of two sections:

$UC_{5-1} = N_{E;d} / (C_{max;buc} \times N_{b;Rd})$ = **n.v.t.** **< 1**

$UC_{5-2} = N_{E;d} / N_{b;Rd} + k_{yy} \times (M_{y;Ed} + DM_{y;Ed}) / (C_{LT} \times M_{y;Rk})$ = **n.v.t.** **< 1**

7 - Check shear stress boltconnection:

$UC_7 = F_{v;Ed} / F_{v;Rd}$ = **0,61** **< 1**

8 - Check bearing stress boltconnection:

$UC_8 = F_{b;Ed} / F_{b;Rd}$ = **0,99** **< 1**

Remarks:

The maximum increase of stress or totalstress is(*2) : **$U.C_{max}$ = 0,99 = 99%**

(*1) Eventually, with the checks of the stresses, the cross-section reduction method is used according to prEN 1993-1-5

(*2) The total stress or increase of stress has been related to the permissible stress

Revision :	0	A	B	C	D	E	F
Date :	13-mrt-2012						
Name :	J Goddijn						
Checked :	J Boogert						

4. CONTROLE BEREKENING FUNDERINGEN

1 Overzicht palen fundatie

mast nummer	**52**	paal-aantal per poot	Paalcapaciteit per paal	Paalcapaciteit totaal per poot	UC.	Extra voorziening
paalbelasting druk per poot	823	2	1090	2180	0,38	
paalbelasting druk per poot	606	2	134	268	2,26	groutanker met capaciteit van 300 kN

mast nummer		paal-aantal per poot	Paalcapaciteit per paal	Paalcapaciteit totaal per poot	UC.	Extra voorziening
paalbelasting druk per poot	1430	4	1387	5548	0,26	
paalbelasting druk per poot	1084	4	174	697	1,56	groutanker met capaciteit van 400 kN

D-Foundations, version 8.2.1.2
File : C:\Lokaal MFoundation Eurocode\D&C Engineering\Koppellijn Krimpen Leiden\Koppellijn krimpen leiden trek
Date : 31-3-2014

Resultaten van de optie Trekpalen (NEN-EN model)
TER INDICATIE: Resultaten bij gebruik Ksi3

Overzicht bij paaltype : prefab 400
Paalgroep 1
Aantal palen in deze paalgroep :4
Paalnamen in deze paalgroep
1 2 3 4

PPN [m R.N.]	Sondering	Rt;d [kN]	Rt;kluit;d [kN]	Paal gewicht [kN]	Aandeel van klei in de trekkracht [%]
-10,85	52	114,56	1231,20	21,63	0,00
-14,20	55	148,99	2544,14	28,07	0,00

Sondering	Alpha t gem. totaal	Alpha t gem. zand/grind/leem	Alpha t gem. klei/veen
52	0,0071	0,0070	0,0100
55	0,0070	0,0070	0,0000

Rapport voor D-Foundations 8.2

Ontwerp en Verificatie volgens Eurocode 7 van Strook- en Paalfunderingen
Ontwikkeld door Deltares

Bedrijfsnaam:	van Dijk geo- en milieutechniek
Datum van rapport:	31-3-2014
Tijd van rapport:	14:13:37
Datum van berekening:	31-3-2014
Tijd van berekening:	14:12:36
Bestandsnaam:	C:\..\Koppellijn Krimpen Leiden\Koppellijn krimpen leiden
Projectbeschrijving:	Koppellijn Krimpen - Leiden
	D-Foundations Koppellijn krimpen leiden

1 Bearing Piles (EC7-NL): Resultaten van de optie Voorontwerp-Draagkracht bij vaste PPN's

1.1 Rekenparameters

1.1.1 Factoren Paal

gamma;b (NEN-EN 1997-1:2005, bijlage A.6 A.7 A.8, Grenstoestand EQU/GEO) :	1,20
gamma;b (NEN-EN 1997-1:2005, bijlage A.6 A.7 A.8, de Bruikbaarheidsgrenstoestand) :	1,00
gamma;s (NEN-EN 1997-1:2005, bijlage A.6 A.7 A.8, Grenstoestand EQU/GEO) :	1,20
gamma;s (NEN-EN 1997-1:2005, bijlage A.6 A.7 A.8, de Bruikbaarheidsgrenstoestand) :	1,00
ksi3 (naar eigen opgave) :	1,39
ksi4 (naar eigen opgave) :	1,39

1.1.2 Paaltype : prefab 400

Paaltype :	Prefab betonpaal
Materiaaltype paal :	Beton
Gladheidsbehandeling voor paal :	Geen gladheidsbehandeling
Paalvorm :	Rechthoekige paal
beta (Paalvoetvormfactor; figuur 7i, NEN-EN 1997 1:2005 par. 7.6.2.3(g): NEN 9097-1) :	1,00
s (NEN-EN 1997 1:2005 par. 7.6.2.3(h), NEN 9097-1 : factor voor invloed vorm dwarsdoorsnede paalvoet) :	1,00
Paalafmetingen :	
Kleinste zijde paalpunt [m] :	0,400
Grootste zijde paalpunt [m] :	0,400

Sondering	Alpha_s Zand/ Grind	Alpha_s Klei/Leem Veen	Alpha_p
52	0,0100	--	1,0000
55	0,0100	--	1,0000

1.2 Overzicht bij paaltype : prefab 400

Sondering	PPN [m R.N.]	Maaiveld [m R.N.]	Rb;cal;max [kN]	Rs;cal;max [kN]	Rc;cal;max [kN]	Rc;d [kN]	F;nk;rep [kN]	Fnk;d [kN]
52	-10.85	0,00	1461	551	2012	1206	116	116
55	-14.20	0,00	1850	714	2564	1537	150	150

1.3 Samenvatting Rekenwaarde Draagkracht in kN

Sondering	Maaiveld [m R.N.]	PPN [m R.N.]	prefab 400 Rc;net;d [kN]
52	0,00	-10,85	1090,00
55	0,00	-14,20	1387,00

Einde Rapport

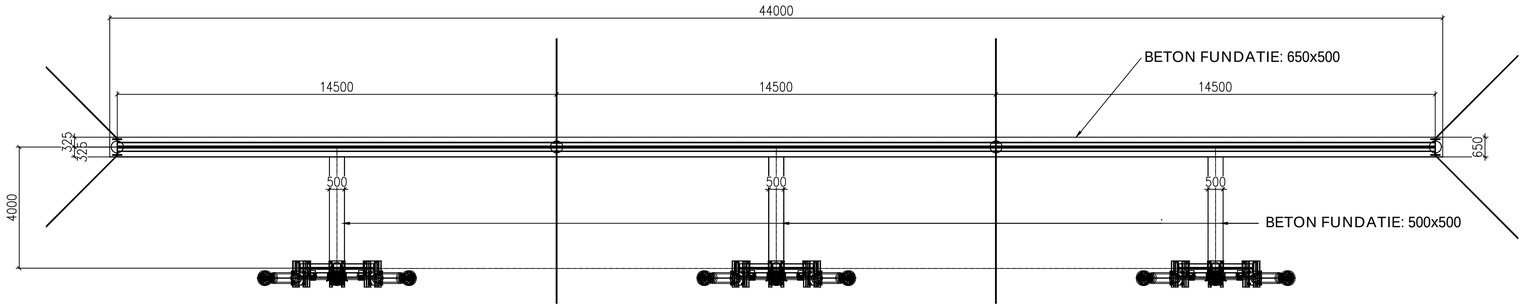

BOVENAANZICHT

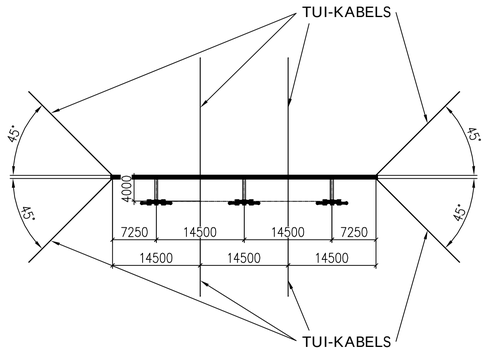

PLAN

VOORAANZICHT

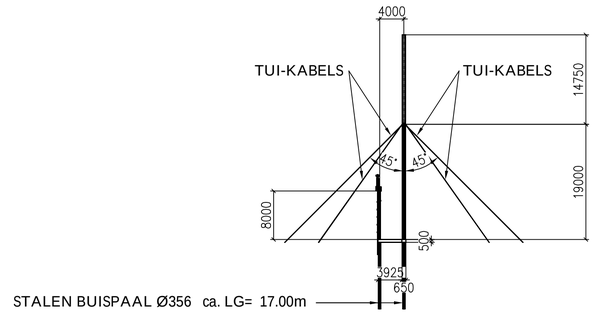

PLAN ZIJAANZICHT

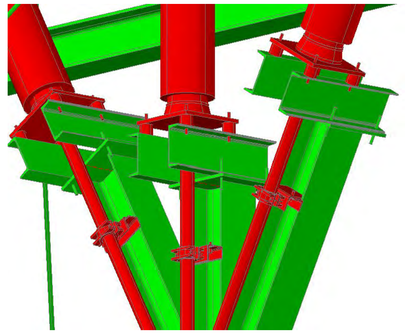

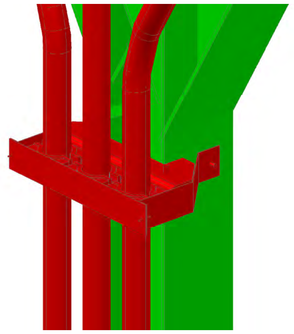

DETAILS ELEKTRA KABELS SUPPORT

D&C DWG No:	D14001 - 0400		
D&C Check controle		J. Hollaar	W. van Bergen
Combining Knowledge and Experience bam COFELY FABRICOM GDF SUEZ Randstad 380kV Noordring	D&C ENGINEERING design and construct	P. de Jager Controleur	E.Duwel Vrijgegeven door
Omschrijving: Definitief Ontwerp Mast amovatie systeem Portaal omleiding YMM53-YMM54 grondkabel	03 02 01 Rev. Wijziging	Datum	Naam
Projekt: Randstad 380kV Noordring	Schaal: 1:100 / 1:20 / 1:10 Naam: HWI	Formaat: A1 Datum: 17-02-2014	
tennet Taking power further	Tekeningnummer: R3N-TEK-0184 blad 001 AutoCAD filename:	Systnr:	

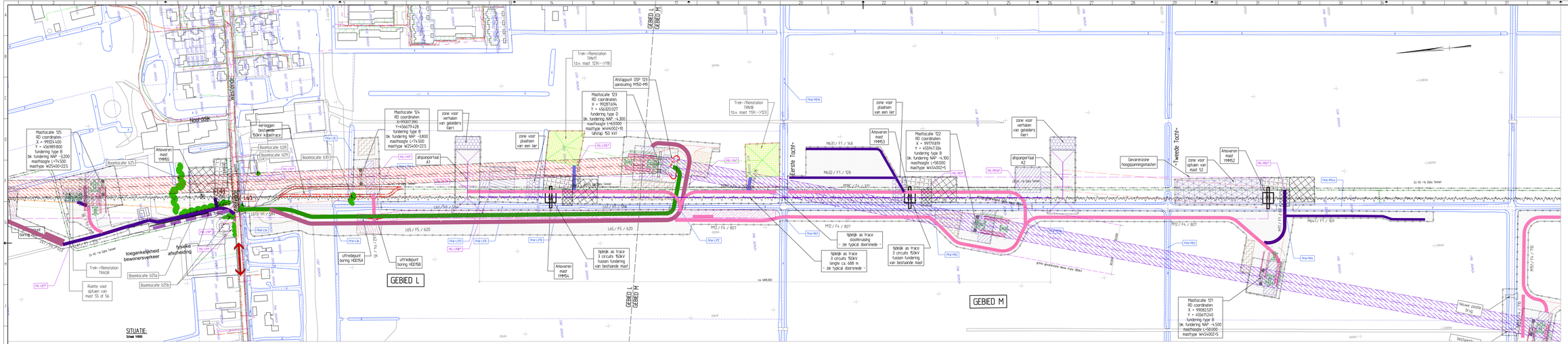

SITUATIE
Schaal 1:1000

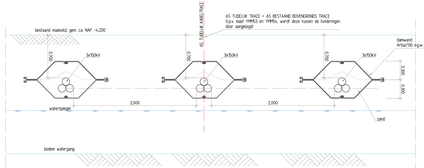

TYPICAL DOORSNEDE TUDELUK KABELTRACE TPV WATERGANG
Schaal 1:20

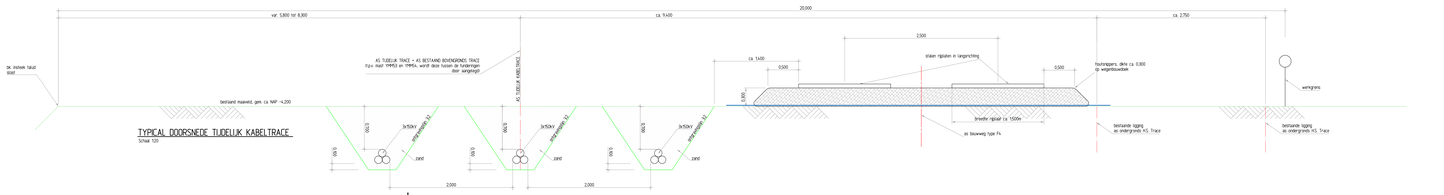

TYPICAL DOORSNEDE TUDELUK KABELTRACE
Schaal 1:20

TOPOGRAFISCH FRAGMENT
Schaal 1:50.000

OPMERKINGEN
- Ter plaatse van aan te legen tijdelijke kabeltrace onder/naast bestaande masten, ons verwijderen van de masten & funderingen, bovengronds beschermen/afdekken met drogheuvelen/stalen rijplaten o.g.w.

Definitief Ontwerp		01			
Aanvraag		02			
Toelichting: Tijd. omleiding best. 150kV tussen mast 52-55		03	Wijziging aan verkoolverbinding	15.-26.-2016	KG.J.Cuijers
		Nr.	Toelichting	Datum	Naam
Schaal: 1:500 / 1:20		Format: A3 / A0			
Project: Randstad 380kV Noordring		Naam: KG.J.Cuijers		Datum: 16.-03.-2016	
Tennet Driving Energy Partner	Transportnummer: R3N-TEK-0163 wijz 001				
Gemeente Tienhoven		Datum:			

Combining knowledge and experience
bam Kwadraat Utiliteitsbouw
COFELY FABRICOM
Kwadraat Utiliteitsbouw

Tekening: 12cmd
Ingegeven door: P. de Jager
Controleur:

Randstad380 Schakel voor de toekomst

Planning Tijdelijke Hoogspanningsverbinding Vijfhuizen - Bleiswijk

Datum: 28 april 2014

TenneT Taking power further

	2015				2016				2017				2018			
	K1	K2	K3	K4	K1	K2	K3	K4	K1	K2	K3	K4	K1	K2	K3	K4
Tijdelijke Hoogspanningsverbinding OSP 213 150kV Drie Merenweg			1 juli - 1 okt 2015	In gebruik 1 oktober 2015 - 27 maart 2018												
Tijdelijke mast 74 Alkemade Bospad 150kV			20 juli - 17 nov 2015	In gebruik 18 nov 2015 - 23 maart 2017												
Tijdelijke verbinding mast 53 - 54 150kV				1 okt 2015 - 1 maart 2016	In gebruik 1 maart 2016 - 23 maart 2017											

Uitvoering aanleg bouwwegen, -terreinen en tijdelijke verbinding

Tijdelijke verbinding in gebruik

Amoveren tijdelijke verbinding

Bijlage 9

Tekeningen werkterreinen
en werkwegen

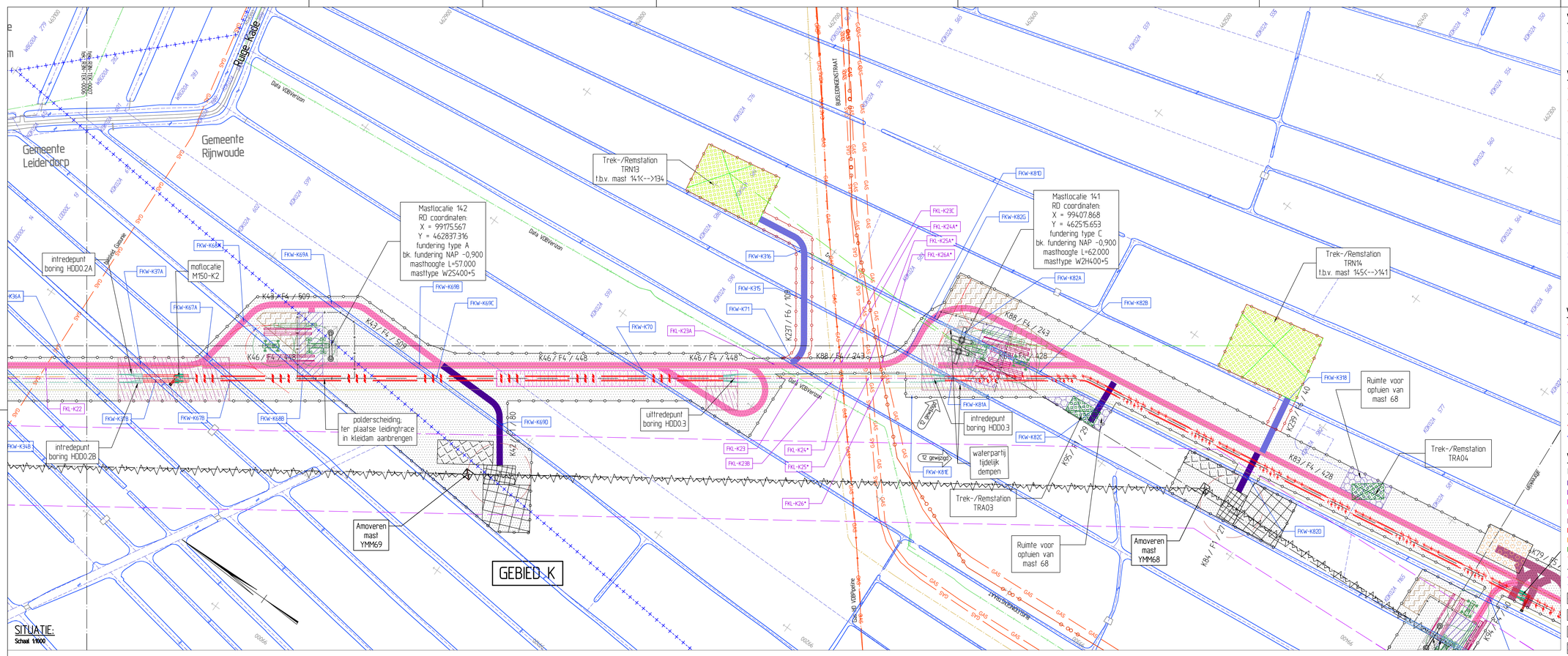

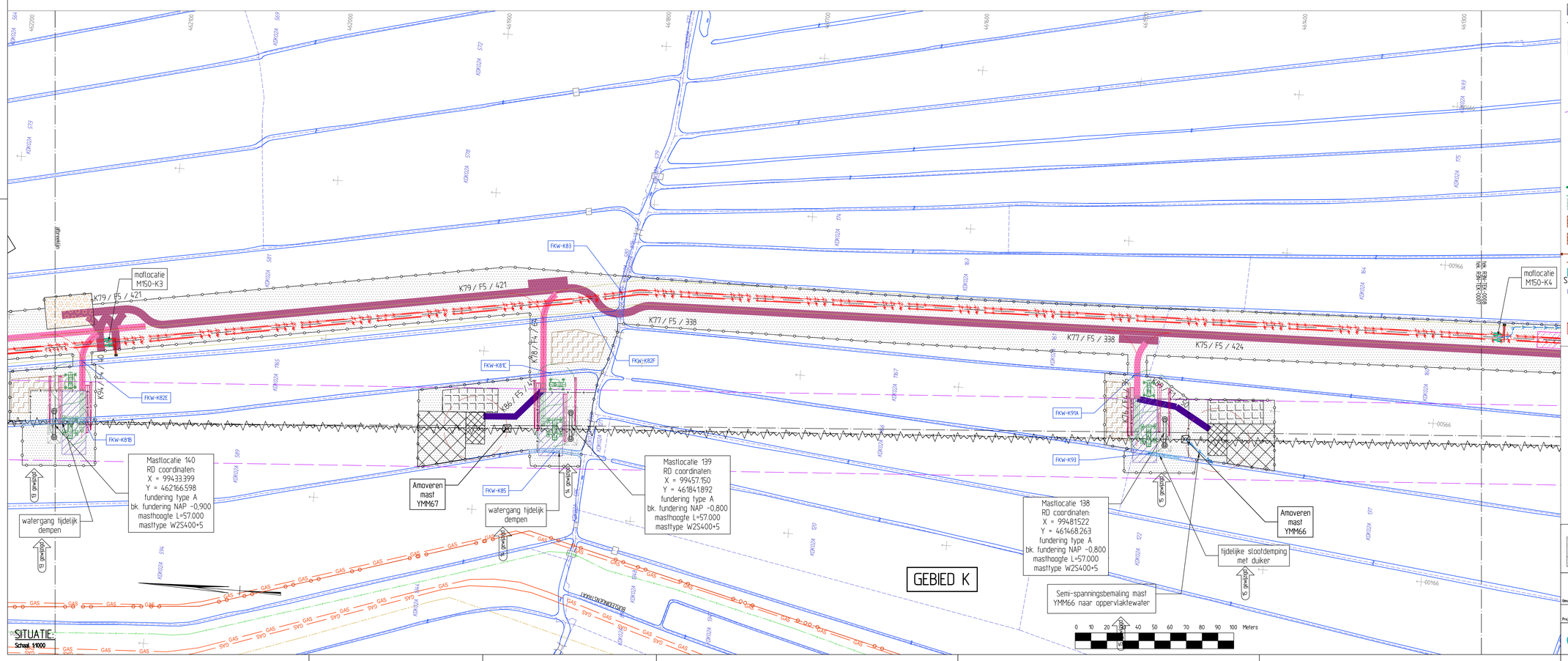

VERKLARING - ALGEMEEN

- Bestaande topografie
- Waterlijn
- Kadastrale grens en sectie/perceelnummer, uit bestand Kadpercl_Bls_Zuid_Ringvaart_1905.DWG (Tennet) — MKP00C 565
- Afbreeklijn
- As-lijn
- Gemeentegrens (2010)

VERKLARING - KLIC

- Gasleiding
- Gasleiding gasunie — GAS
- Gasleiding hd
- Gasleiding ld
- Waterleiding
- Warmtenet
- Koudenet
- Chemie
- Brandstof transportleiding
- Riolering transportleiding
- Hemelwater transportleiding
- Vuilwater transportleiding
- Drainage
- Persleiding — P
- Vacuumleiding — V
- Duiker
- Straatkolk
- Trottoirkolk
- Hwa put
- Vwa put
- Drainage put
- Persleiding rioolput
- Persleiding pomput
- Gemaal
- Mantelbuis
- Glasvezel
- Cai
- Data
- Hoogspanning
- Middenspanning
- Laagspanning
- Vri (verkeersregelinstallatie)
- Ov (openbare verlichting)
- Prorail overig — PRG
- Kabelkoker
- Kabeltrace vervallen
- Gestuurde boring derden
- Zinker
- Lichtmast

VERKLARING - LEIDINGWERK:

- Aanbrengen kabel 150 kV
- Aanbrengen kabel 380 kV
- Aanbrengen las mof
- Aanbrengen ondergrondse aardingsput verbonden met aardingskabels naar mof
- Aanbrengen bovengronds combi trace (150 kV + 380 kV)
- Aanbrengen bovengronds trace 380 kV
- Gevarenzone bestaand bovengronds kabeltrace
- Beschikbare ruimte om kabels te installeren
- Te verwijderen bovengrondse trace 150 kV
- Verwijderen kabel 150 kV
- Verwijderen kabel 150 kV (hergebruik)
- Bestaande, te handhaven kabel 150 kV
- Aanbrengen gestuurde boring 150 kV
- Aanbrengen gestuurde boring 380 kV
- Aanbrengen gestuurde boring 380 kV
- Verleggen mantelbuis met glasvezelkabel
- Ontluchtingsput met straalpot bij uiteinde mantelbuis boring 380kV
- M3-4 infiltratiepunt retourbemaling (met nummer)

VERKLARING - CIVIEL:

- K75 /F5 /374 — Nummer bouwweg (K75) / type bouwweg (F5) / lengte in meters (374)
- Bouwweg type F1, rijplaten lengterichting op maaiveld
- Bouwweg type F2, rijplaten lengterichting zandbed en doek
- Bouwweg type F3, rijplaten dwarsrichting zandbed en doek
- Bouwweg type F4, rijplaten lengterichting op houtsnippers en doek
- Bouwweg type F5, rijplaten dwarsrichting op houtsnippers en doek
- Bouwweg type G1, funderingslaag, doek, zandbed, doek
- Bouwweg type G2, funderingslaag en doek op bestaande verharding
- Permanente toegangsweg type H1, klinkerverharding, straatlaag, funderingslaag en zandbed
- Indicatie voertuigbeweging mast/transport op werkterrein (bochtstraalen tot R=20m)
- Tijdelijke verharding middels rijplaten
- Indicatieve werkgrens
- Grens onderhoudsgebied opstijgpunt
- wegafzetting (barrier)
- retourbemalingsbuizen van bron naar retourbemalingsput(ten)
- Zone retourbemalingsput ca. 10x10m
- Indicatie benodigd werkterrein
- Werkruimte t.b.v. montage & trekken mantelbuizen in boring(en)
- Reservering kabel-haspel-opstelplaats
- Zone kraan amoveren mast opstelruimte ca. 12x20m
- Reservering grondopslag uit ontgravingen
- Zone afbraak mastkop ca. 15x15m
- Tijdelijke verharding bouwterrein van zand met rijplaten
- Zone afbraak mastlichaam ca. 30x30m
- Tijdelijk of permanent dempen van watergang
- Reservering voor ketenterrein
- Bouwtrek
- FKL-K07 — Aanduiding kabel/leidingkruising met bouwwegen en/of leidingtrace
- FKL-L11* — Aanduiding meerdere kabel/leidingkruisingen met bouwweg en/of leidingtrace
- FKW-K11 — Aanduiding kruising watergang met bouwweg en/of leidingtrace
- indicatieve ontgravingslijn voor aanleg fundering
- funderingsconstructie
- tuidraden tijdelijk mastportaal
- Zone opstelplaats kraan ca. 12x20m
- Zone montageplaats portaal ca. 30x30m
- Rem-/trekstation voor te amoveren bovengrondse hoogspanningsverbinding
- Trek- /Remstation voor tijdelijk bovengrondse hoogspanningsverbinding
- Ligging buitenste bovengrondse kabel tijdelijke hoogspanningslijnen
- J41 — Openbare wegaansluiting (met nr.)
- Routering bouwverkeer
- Gebied met te verwijderen bossage en/of bomen, ivm. bouwwerkzaamheden
- Gebied met te verwijderen bossage en/of bomen, ivm zakelijk recht bovengrondse hoogspanningverbindingen
- Juk voor aanbrengen van bovengrondse hoogspanningsverbinding ter afscherming van obstakels. (door derden)
- JUKN01 — Afscherming obstakels voor aanbrengen hoogspanningsverbinding d.m.v. een net en stellage. (door derden)
- Afscherming obstakels voor amoveren hoogspanningsverbinding d.m.v. een net en stellage.
- Afscherming obstakels voor amoveren hoogspanningsverbinding d.m.v. een net en kraanopstelling
- JUKA04 — Juk voor amoveren van bovengrondse hoogspanningsverbinding ter afscherming van obstakels.
- STELN02 — Steling (xbxh 40x5x11m) t.b.v. aanbrengen van een net over obstakels. (door derden)
- Bouwweg type F6, verharding t.b.v. trek-/remstations
- trekrichting
- Trek- /Remstation voor nieuwe bovengrondse hoogspanningsverbinding
- Indicatie benodigd werkterrein voor de aanleg van Trek-/Remstations voor nieuwe bovengrondse hoogspanningsverbinding

TOPOGRAFISCH FRAGMENT

Schaal 1:50.000

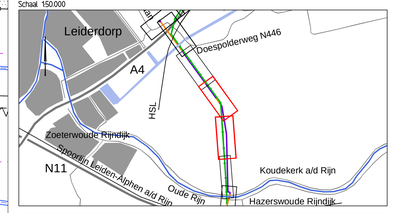

Combining Knowledge and Experience

bam | COFELY FABRICOM

Randstad 380kV Noordring

		P. de Jager	E.Duvel
		Eindtekenaar	Vrijgegeven door
Omschrijving	Definitief Ontwerp Algemeen Overzichtstekening, blad 8 van 20 (mast 142-138)		
Rev.	Wijziging	Datum	Naam
10	zie wijzigingsopijlen	5-8-2014	RGJ Caspers
9	zie wijzigingsopijlen	24-4-2014	RGJ Caspers
Schaal:	1:1000	Formaat:	A0
Naam:	R.G.J. Caspers	Datum:	19-7-2013

Project: Randstad 380kV Noordring

TENNET taking power further

Tekeningnummer: R3N-TEK-0007 blad 1

AutoCAD filename:

Systeem:

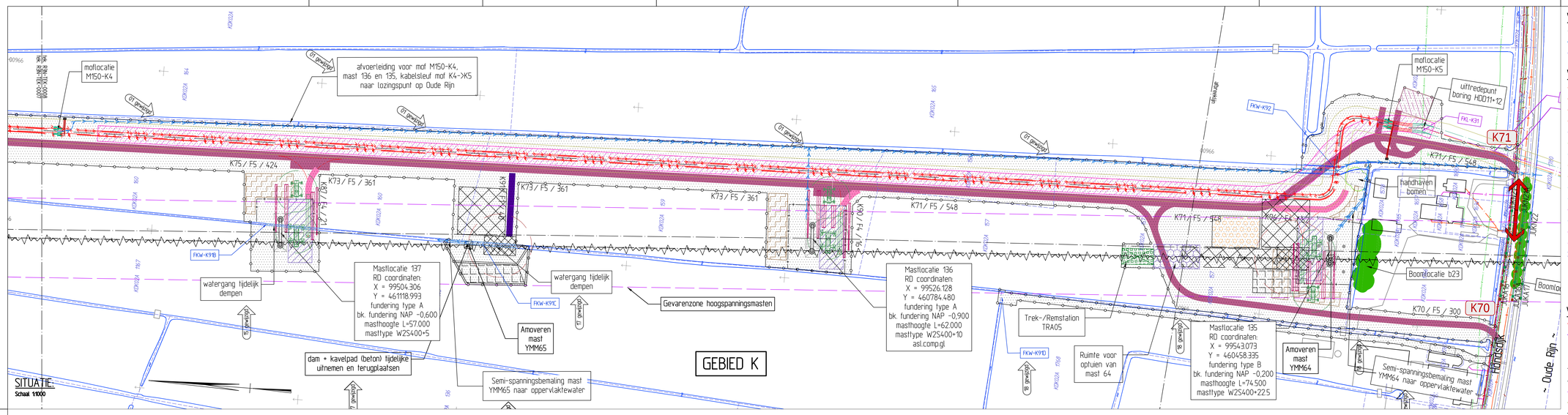

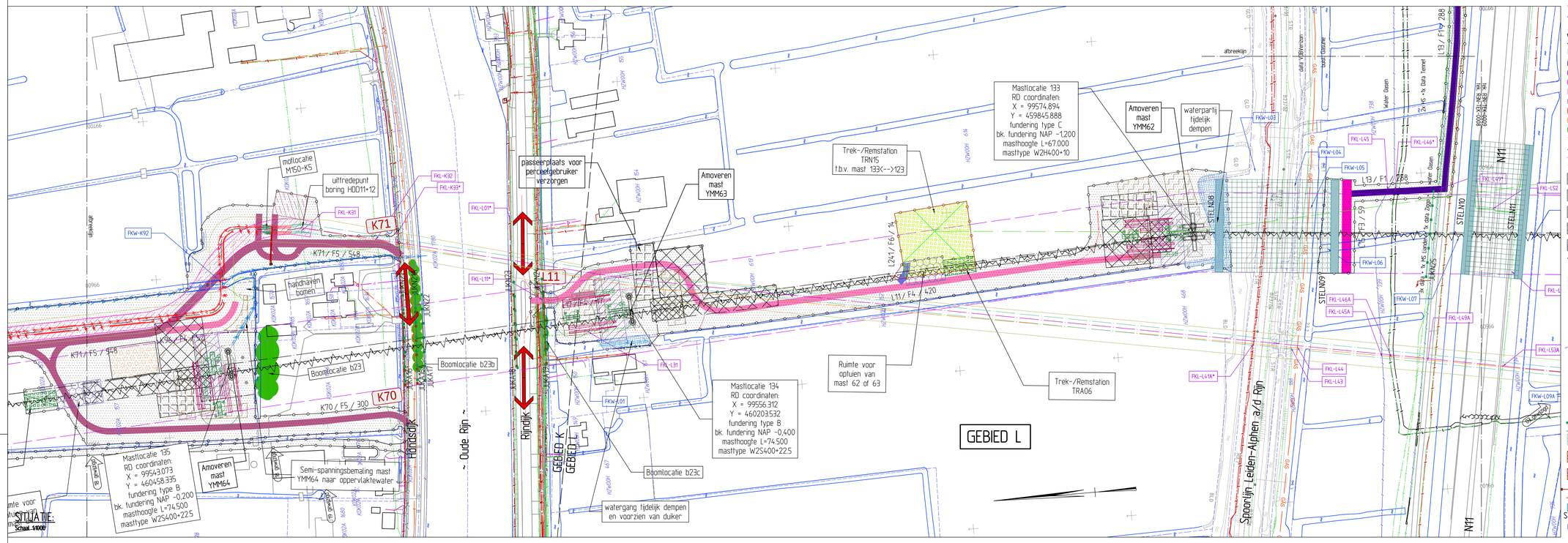

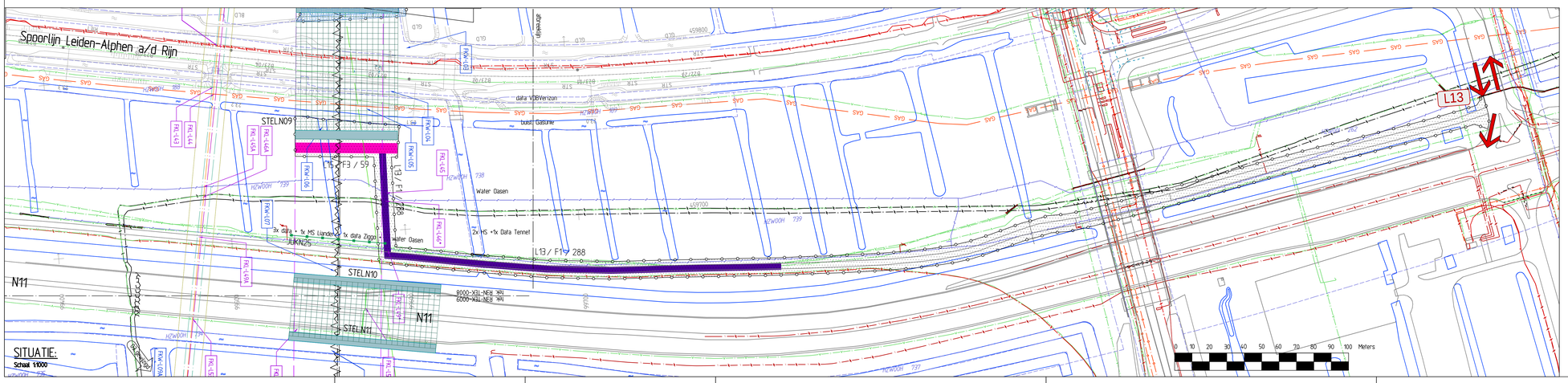

VERKLARING - ALGEMEEN

- Bestaande topografie
- Waterlijn
- Kadastrale grens en sectie/perceelnummer, uit bestand Kadperc_Bls_Zuid_Ringvaart_1905.DWG (Tennet)
- Afbreeklijn
- As-lijn
- Gemeentegrens (2010)

VERKLARING - KLIC

- Gasleiding
- Gasleiding gasunie
- Gasleiding hd
- Gasleiding ld
- Waterleiding
- Warmtenet
- Koudenet
- Chemie
- Brandstof transportleiding
- Riolering transportleiding
- Hemelwater transportleiding
- Vuilwater transportleiding
- Drainage
- Persleiding
- Vacuumleiding
- Duiker
- Straatkolk
- Trottoirkolk
- Hwa put
- Vwa put
- Drainage put
- Persleiding inlaatput
- Persleiding pompput
- Gemaal
- Mantelbuis
- Glasvezel
- Cai
- Data
- Hoogspanning
- Middenspanning
- Laagspanning
- Vri (verkeersregelinstallatie)
- Ov (openbare verlichting)
- Prorail overig
- Kabelkoker
- Kabeltrace vervallen
- Gestuurde boring derden
- Zinker
- Lichtmast

VERKLARING - LEIDINGWERK:

- Aanbrengen kabel 150 kV
- Aanbrengen kabel 380 kV
- Aanbrengen las mof
- Aanbrengen ondergrondse aardingsput verbinding met aardingskabels naar mof
- Aanbrengen bovengronds combi trace (150 kV + 380 kV)
- Aanbrengen bovengronds trace 380 kV
- Gevarenzone bestaand bovengronds kabeltrace
- Beschikbare ruimte om kabels te installeren
- Te verwijderen bovengrondse trace 150 kV
- Verwijderen kabel 150 kV
- Verwijderen kabel 150 kV (hergebruik)
- Bestaande, te handhaven kabel 150 kV
- Aanbrengen gestuurde boring 150 kV
- Aanbrengen gestuurde boring 380 kV
- Aanbrengen gestuurde boring 380 kV
- Verleggen mantelbuis met glasvezelkabel
- Ontluchtingsput met straatpot bij uiteinde mantelbuis boring 380kV
- M3-4 Infiltratiepunt retourbemaling (met nummer)

VERKLARING - CIVIEL:

- K75 /F5 /374 — Nummer bouwweg (K75) / type bouwweg (F5) / lengte in meters (374)
- Bouwweg type F1, rigtalen lengterichting op maaiveld
- Bouwweg type F2, rigtalen lengterichting zandbed en doek
- Bouwweg type F3, rigtalen dwarsrichting zandbed en doek
- Bouwweg type F4, rigtalen lengterichting op houtsnippers en doek
- Bouwweg type F5, rigtalen dwarsrichting op houtsnippers en doek
- Bouwweg type G1, funderingslaag, doek, zandbed, doek
- Bouwweg type G2, funderingslaag en doek op bestaande verharding
- Permanente toegangsweg type H1, klinkerverharding, straatlaag, funderingslaag en zandbed
- Indicatie voertuigbeweging mastTransport op werkterrein (bochtstralen tot R=20m)
- Tijdelijke verharding middels rigtalen
- Indicatieve werkgrens
- wegafzetting (barrier)
- retourbemalingsbuizen van bron naar retourbemalingsput(ten)
- Indicatie benodigd werkterrein
- Reservering kabel-haspel-opstelplaats
- Reservering grondopslag uit ontgravingen
- Tijdelijke verharding bouwterrein van zand met rigtalen
- Tijdelijk of permanent dempen van watergang
- Bouwhek
- indicatieve ontgravingslijn voor aanleg fundering
- funderingsconstructie
- haidraden tijdelijk mastportaal
- Zone opstelplaats kraan ca. 12x20m
- Zone montageplaats portaal ca. 30x30m
- Grens onderhoudsgebied opstijgpunt
- Zone retourbemalingsput ca. 10x10m
- Werkruimte t.b.v. montage & trekken mantelbuizen in boring(en)
- Zone kraan amoveren mast opstelruimte ca. 12x20m
- Zone afbraak mastkop ca. 15x15m
- Zone afbraak mastlichaam ca. 30x30m
- Reservering voor ketenterrein
- FKL-K07 — Aanduiding kabel/leidingkruising met bouwwegen en/of leidingtrace
- FKL-L11* — Aanduiding meerdere kabel/leidingkruisingen met bouwweg en/of leidingtrace
- FKW-K11 — Aanduiding kruising watergang met bouwweg en/of leidingtrace
- Rem-/Trekstation voor te amoveren bovengrondse hoogspanningsverbinding
- Trek- /Remstation voor tijdelijk bovengrondse hoogspanningsverbinding
- Ligging buitenste bovengrondse kabel tijdelijke hoogspanningslijnen
- J41 — Openbare wegaansluiting (met nr.)
- Routering bouwverkeer
- Gebied met te verwijderen bossage en/of bomen, ivm. bouwwerkzaamheden
- Gebied met te verwijderen bossage en/of bomen, ivm zakelijk recht bovengrondse hoogspanningverbindingen
- JUKN01 — Juk voor aanbrengen van bovengrondse hoogspanningsverbinding ter afscherming van obstakels (door derden)
- Afscherming obstakels voor aanbrengen hoogspanningsverbinding d.m.v. een net en stellage. (door derden)
- Afscherming obstakels voor amoveren hoogspanningsverbinding d.m.v. een net en stellage.
- Afscherming obstakels voor amoveren hoogspanningsverbinding d.m.v. een net en kraanopstelling
- JUKA04 — Juk voor amoveren van bovengrondse hoogspanningsverbinding ter afscherming van obstakels.
- STELN02 — Steling (lxbxh 40x5x11m) t.b.v. aanbrengen van een net over obstakels. (door derden)
- Bouwweg type F6, verharding t.b.v. trek-/remstations trekrichting
- Trek- /Remstation voor nieuwe bovengrondse hoogspanningsverbinding
- Indicatie benodigd werkterrein voor de aanleg van Trek-/Remstations voor nieuwe bovengrondse hoogspanningsverbinding

TOPOGRAFISCH FRAGMENT

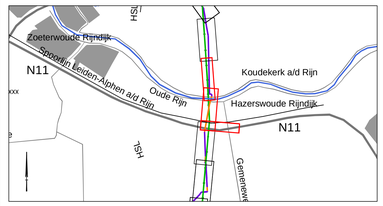

Combining Knowledge and Experience

Randstad 380kV Noordring

Ontwerper	P. de Jager	E.Duvel
	Controleur	Vrijgegeven door

Omschrijving: Definitief Ontwerp
Algemeen
Overzichtstekening, blad 9 van 20 (mast 137-133)

Rev.	Wijziging	Datum	Naam
10	zie wijzigingspijlen	1-8-2014	RGJ Caspers
9	zie wijzigingspijlen	24-4-2014	RGJ Caspers

Schaal: 1:1000 Formaat: A0

Project: Randstad 380kV Noordring

Naam: R.G.J. Caspers Datum: 19-7-2013

Tennet — Taking power further

Tekeningnummer: R3N-TEK-0008 blad 1

AutoCAD Filename: System:

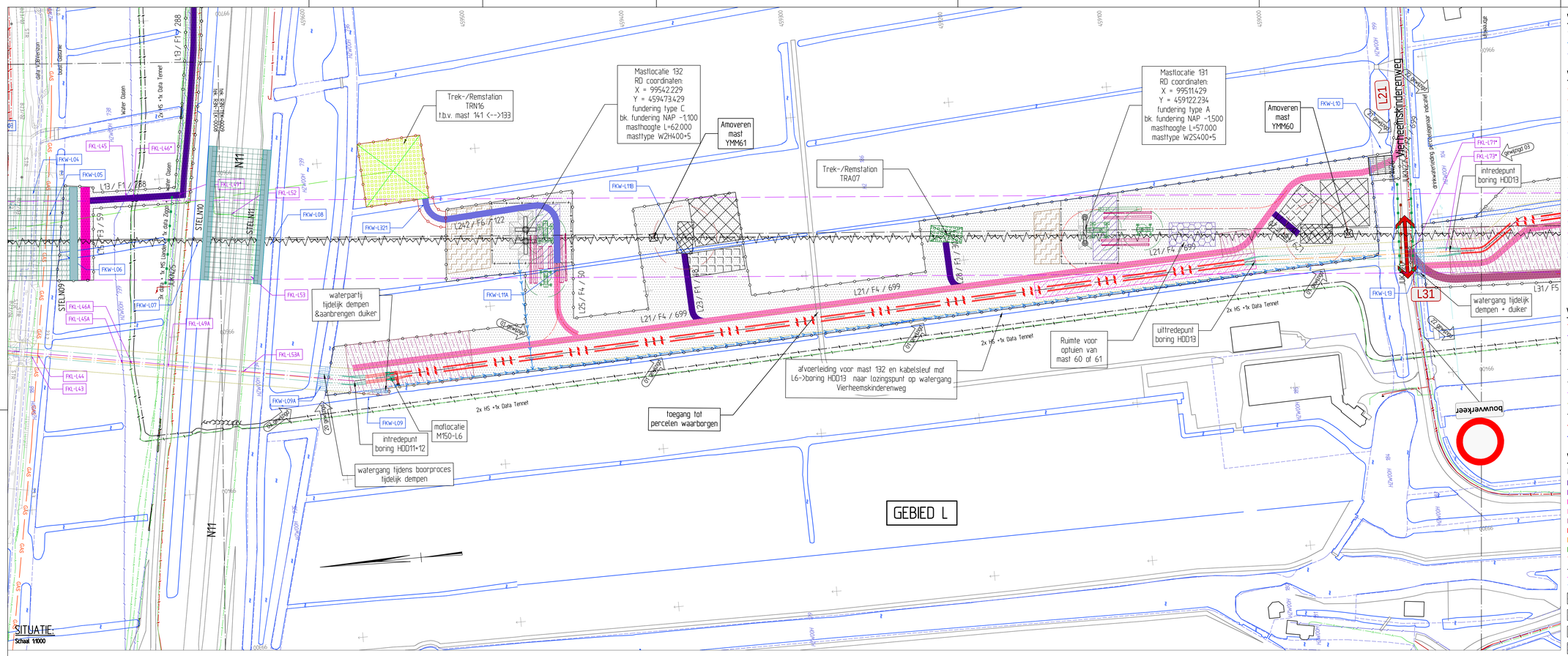

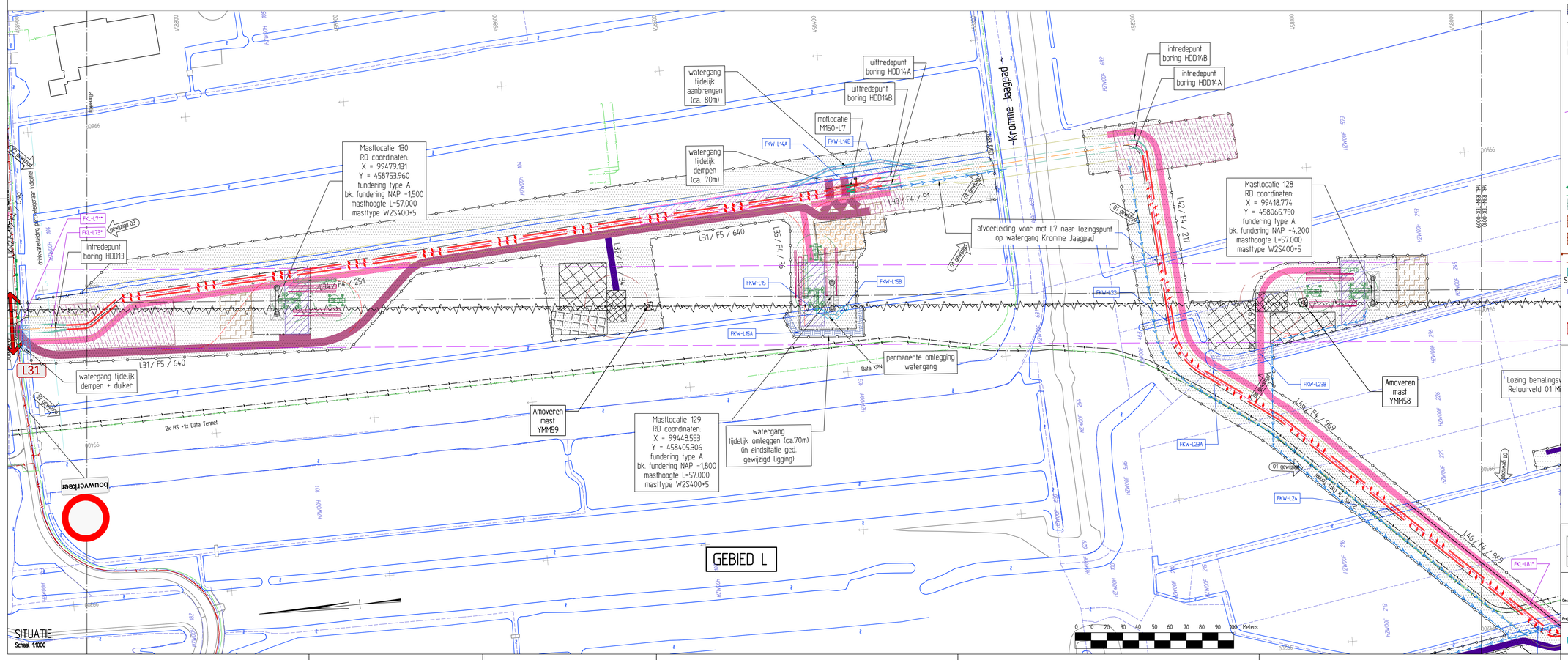

VERKLARING - ALGEMEEN

- Bestaande topografie
- Waterlijn
- Kadastrale grens en sectie/perceelnummer, uit bestand Kadperc_Bis_Zuid_Ringvaart_1905.DWG (Tennet)
- Afbreeklijn
- As-lijn
- Gemeentegrens (2010)

VERKLARING - KLIC

- Gasleiding
- Gasleiding gasunie
- Gasleiding hd
- Gasleiding ld
- Waterleiding
- Warmtenet
- Koudenet
- Chemie
- Brandstof transportleiding
- Riolering transportleiding
- Hemelwater transportleiding
- Vuilwater transportleiding
- Drainage
- Persleiding
- Vacuumleiding
- Duiker
- Straatkolk
- Trottoirkolk
- Hwa put
- Vwa put
- Drainage put
- Persleiding nooitput
- Persleiding pompput
- Gemaal
- Mantelbuis
- Glasvezel
- Cai
- Data
- Hoogspanning
- Middenspanning
- Laagspanning
- Vri (verkeersregelinstallatie)
- Ov (openbare verlichting)
- Prorail overig
- Kabelkoker
- Kabeltrace vervallen
- Gestuurde boring derden
- Zinker
- Lichtmast

VERKLARING - LEIDINGWERK:

- Aanbrengen kabel 150 kV
- Aanbrengen kabel 380 kV
- Aanbrengen las mof
- Aanbrengen ondergrondse aardingsput verbinding met aardingskabels naar mof
- Aanbrengen bovengronds combi trace (150 kV + 380 kV)
- Aanbrengen bovengronds trace 380 kV
- Gevarenzone bestaand bovengronds kabeltrace
- Beschikbare ruimte om kabels te installeren
- Te verwijderen bovengronse trace 150 kV
- Verwijderen kabel 150 kV
- Verwijderen kabel 150 kV (hergebruik)
- Bestaande, te handhaven kabel 150 kV
- Aanbrengen gestuurde boring 150 kV
- Aanbrengen gestuurde boring 380 kV
- Aanbrengen gestuurde boring 380 kV
- Verleggen mantelbuis met glasvezelkabel
- Ontluchtingsput met straatpot bij uiteinde mantelbuis boring 380kV
- M3-4 Inlitrlepunt retourbemaling (met nummer)

VERKLARING - CIVIEL:

- K75 /F5 /374 — Nummer bouwweg (K75) / type bouwweg (F5) / lengte in meters (374)
- Bouwweg type F1, rijplaten lengterichting op maaiveld
- Bouwweg type F2, rijplaten lengterichting zandbed en doek
- Bouwweg type F3, rijplaten dwarsrichting zandbed en doek
- Bouwweg type F4, rijplaten lengterichting op houtsnippers en doek
- Bouwweg type F5, rijplaten dwarsrichting op houtsnippers en doek
- Bouwweg type G1, funderingslaag, doek, zandbed, doek
- Bouwweg type G2, funderingslaag en doek op bestaande verharding
- Permanente toegangsweg type H1, klinkerverharding, straatlaag, funderingslaag en zandbed
- Indicatie voertuigbeweging masttransport op werkterrein (bochtstraal tot R=20m) tijdelijke verharding middels rijplaten
- Indicatieve werkgrens
- Grens onderhoudsgebied opslagpunt
- wegafzetting (barrier)
- retourbemalingsbuizen van bron naar retourbemalingsput(ten)
- Zone retourbemalingsput ca. 10x10m
- Indicatie benodigd werkterrein
- Werkruimte t.b.v. montage & trekken mantelbuizen in boring(en)
- Reservering kabel-haspel-opstelplaats
- Zone kraan amoveren mast opstelruimte ca. 12x20m
- Reservering grondopslag uit ontgravingen
- Zone afbraak mastkop ca. 15x15m
- Tijdelijke verharding bouwterrein van zand met rijplaten
- Zone afbraak mastlichaam ca. 30x30m
- Tijdelijk of permanent dempen van watergang
- Reservering voor ketenterrein
- Bouwtrek
- FKL-K07 — Aanduiding kabel/leidingkruising met bouwwegen en/of leidingtrace
- indicatieve ontgravingslijn voor aanleg fundering
- FKL-L19* — Aanduiding meerdere kabel/leidingkruisingen met bouwweg en/of leidingtrace
- FKW-K11 — Aanduiding kruising watergang met bouwweg en/of leidingtrace
- funderingsconstructie
- tuidraden tijdelijk mastportaal
- Rem-/trekstation voor te amoveren bovengronse hoogspanningsverbinding
- Zone opstelplaats kraan ca. 12x20m
- Trek- /Remstation voor tijdelijk bovengronse hoogspanningsverbinding
- Zone montageplaats portaal ca. 30x30m
- Ligging buitenste bovengronse kabel tijdelijke hoogspanningslijnen
- J41 — Openbare wegaansluiting (met nr.)
- Routering bouwverkeer
- Gebied met te verwijderen bossage en/of bomen, ivm. bouwwerkzaamheden
- Gebied met te verwijderen bossage en/of bomen, ivm zakelijk recht bovengrondse hoogspanningsverbindingen
- Juk voor aanbrengen van bovengronse hoogspanningsverbinding ter afscherming van obstakels. (door derden)
- JUKN01 — Afscherming obstakels voor aanbrengen hoogspanningsverbinding d.m.v. een net en stellage. (door derden)
- Afscherming obstakels voor amoveren hoogspanningsverbinding d.m.v. een net en stellage.
- Afscherming obstakels voor amoveren hoogspanningsverbinding d.m.v. een net en kraanopstelling
- JUKA04 — Juk voor amoveren van bovengronse hoogspanningsverbinding ter afscherming van obstakels.
- STELN02 — Stelling (lxbxh 40x5x11m) t.b.v. aanbrengen van een net over obstakels. (door derden)
- Bouwweg type F6, verharding t.b.v. trek-/remstations
- Trekrichting
- Trek- /Remstation voor nieuwe bovengronse hoogspanningsverbinding
- Indicatie benodigd werkterrein voor de aanleg van Trek-/Remstations voor nieuwe bovengronse hoogspanningsverbinding

TOPOGRAFISCH FRAGMENT

Schaal 1:50.000

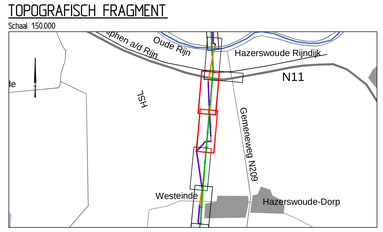

Combining Knowledge and Experience

bam COFELY FABRICOM

Randstad 380kV Noordring

			P. de Jager	E.Duvel
			Controleur	Vrijgegeven door
	10	zie wijzigingsgrijsen	1-8-2014	RGJ Caspers
	9	zie wijzigingsgrijsen	24-4-2014	RGJ Caspers
Omschrijving	Rev.	Wijziging	Datum	Naam

Definitief Ontwerp
Algemeen
Overzichtstekening, blad 10 van 20 (mast 132-128)

Schaal 1:1000 | Formaat A0

Project: Randstad 380kV Noordring | Naam R.G.J. Caspers | Datum 19-7-2013

TENNET Taking power further

Tekeningnummer: R3N-TEK-0009 blad 1

AutoCAD Filename:

Systeem:

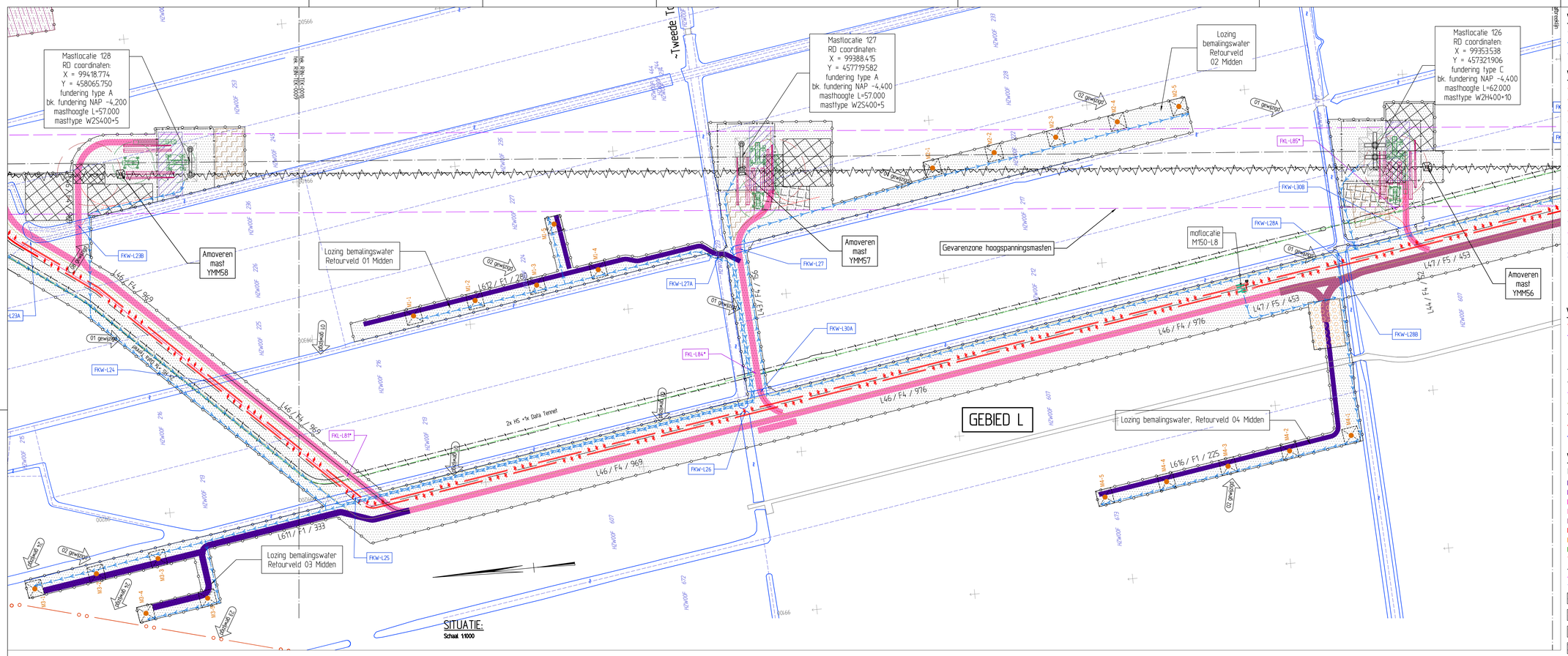

SITUATIE:
Schaal 1:1000

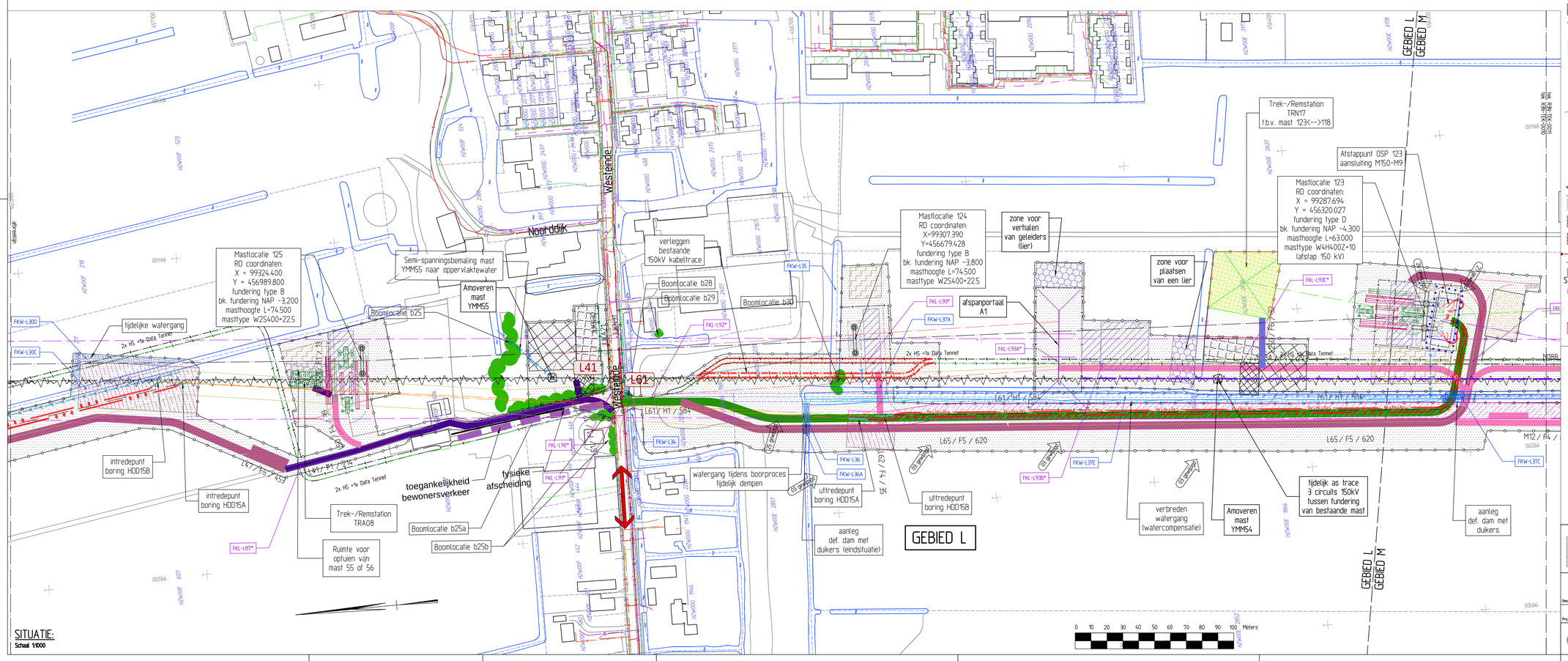

SITUATIE:
Schaal 1:1000

0 10 20 30 40 50 60 70 80 90 100 Meters

VERKLARING - ALGEMEEN

- Bestaande topografie
- Waterlijn
- Kadastrale grens en sectie/perceelnummer, uit bestand Kadpercl_Bls_Zuid_Ringvaart_1905.DWG (Tennet) — MKP00C 565
- Afbreeklijn
- As-lijn
- Gemeentegrens (2010)

VERKLARING - KLIC

- Gasleiding
- GAS Gasleiding gasunie
- Gasleiding hd
- Gasleiding ld
- Waterleiding
- Warmtenet
- Koudenet
- Chemie
- Brandstof transportleiding
- Riolering transportleiding
- Hemelwater transportleiding
- Vuilwater transportleiding
- Drainage
- P Persleiding
- V Vacuumleiding
- Duiker
- Straatkolk
- Trottoirkolk
- Hwa put
- Vwa put
- Drainage put
- Persleiding rioolput
- Persleiding pompput
- Gemaal
- Mantelbuis
- Glasvezel
- Cai
- Data
- Hoogspanning
- Middenspanning
- Laagspanning
- Vri (verkeersregelinstallatie)
- Ov (openbare verlichting)
- Prorail overig
- Kabelkoker
- Kabeltrace vervallen
- Gestuurde boring derden
- Zinker
- Lichtmast

VERKLARING - LEIDINGWERK:

- Aanbrengen kabel 150 kV
- Aanbrengen kabel 380 kV
- Aanbrengen las mof
- Aanbrengen ondergrondse aardingsput verbinding met aardingskabels naar mof
- Aanbrengen bovengronds combi trace (150 kV + 380 kV)
- Aanbrengen bovengronds trace 380 kV
- Gevarenzone bestaand bovengronds kabeltrace
- Beschikbare ruimte om kabels te installeren
- Te verwijderen bovengrondse trace 150 kV
- Verwijderen kabel 150 kV
- Verwijderen kabel 150 kV (hergebruik)
- Bestaande, te handhaven kabel 150 kV
- Aanbrengen gestuurde boring 150 kV
- Aanbrengen gestuurde boring 380 kV
- Aanbrengen gestuurde boring 380 kV
- Verleggen mantelbuis met glasvezelkabel
- Ontluchtingsput met straalpot bij uiteinde mantelbuis boring 380kV
- M3-4 infiltratiepunt retourbemaling (met nummer)

VERKLARING - CIVIEL:

- K75 /F5 /374 Nummer bouwweg (K75) / type bouwweg (F5) / lengte in meters (374)
- Bouwweg type F1, rijplaten lengterichting op maaiveld
- Bouwweg type F2, rijplaten lengterichting zandbed en doek
- Bouwweg type F3, rijplaten dwarsrichting zandbed en doek
- Bouwweg type F4, rijplaten lengterichting op houtsnippers en doek
- Bouwweg type F5, rijplaten dwarsrichting op houtsnippers en doek
- Bouwweg type G1, funderingslaag, doek, zandbed, doek
- Bouwweg type G2, funderingslaag en doek op bestaande verharding
- Permanente toegangsweg type H1, klinkerverharding, straatlaag, funderingslaag en zandbed
- Indicatie voertuigbeweging mastTransport op werkterrein (bochtstraalen tot R=20m)
- Tijdelijke verharding middels rijplaten
- Indicatieve werkgrens
- Grens onderhoudsgebied opstigpunt
- wegafzetting (barrier)
- retourbemalingsbuizen van bron naar retourbemalingsput(ten)
- Zone retourbemalingsput ca. 10x10m
- Indicatie benodigd werkterrein
- Werkruimte t.b.v. montage & trekken mantelbuizen in boring(en)
- Reservering kabel-haspels-opstelplaats
- Zone kraan amoveren mast opstelruimte ca. 12x20m
- Reservering grondopslag uit ontgravingen
- Zone afbraak mastkop ca. 15x15m
- Tijdelijke verharding bouwterrein van zand met rijplaten
- Zone afbraak mastlichaam ca. 30x30m
- Tijdelijk of permanent dempen van watergang
- Reservering voor ketenterrein
- Bouwtrek
- FKL-K07 Aanduiding kabel/leidingkruising met bouwwegen en/of leidingtrace
- FKL-L19* Aanduiding meerdere kabel/leidingkruisingen met bouwweg en/of leidingtrace
- FKW-K11 Aanduiding kruising watergang met bouwweg en/of leidingtrace
- indicatieve ontgravingslijn voor aanleg fundering
- funderingsconstructie
- hulptraden tijdelijk mastportaal
- Rem-/trekstation voor te amoveren bovengrondse hoogspanningsverbinding
- Zone opstelplaats kraan ca. 12x20m
- Trek-/Remstation voor tijdelijk bovengrondse hoogspanningsverbinding
- Zone montageplaats portaal ca. 30x30m
- Ligging buitenste bovengrondse kabel tijdelijke hoogspanningslijnen
- J41 Openbare wegaansluiting (met nr.)
- Routering bouwverkeer
- Gebied met te verwijderen bossage en/of bomen, ivm. bouwwerkzaamheden
- Gebied met te verwijderen bossage en/of bomen, ivm zakelijk recht bovengrondse hoogspanningsverbindingen
- Juk voor aanbrengen van bovengrondse hoogspanningsverbinding ter afscherming van obstakels. (door derden)
- JUKN01 Afscherming obstakels voor aanbrengen hoogspanningsverbinding d.m.v. een net en stellage. (door derden)
- Afscherming obstakels voor amoveren hoogspanningsverbinding d.m.v. een net en stellage.
- Afscherming obstakels voor amoveren hoogspanningsverbinding d.m.v. een net en kraanopstelling
- JUKA04 Juk voor amoveren van bovengrondse hoogspanningsverbinding ter afscherming van obstakels.
- STELN02 Steling (xxbxh 40x5x11m) t.b.v. aanbrengen van een net over obstakels. (door derden)
- Bouwweg type F6, verharding t.b.v. trek-/remstations
- trekrichting
- Trek-/Remstation voor nieuwe bovengrondse hoogspanningsverbinding
- Indicatie benodigd werkterrein voor de aanleg van Trek-/Remstations voor nieuwe bovengrondse hoogspanningsverbinding

TOPOGRAFISCH FRAGMENT

Schaal 1:50.000

Combining Knowledge and Experience

bam COFELY FABRICOM

Randstad 380kV Noordring

			P. de Jager	E.Duvel
			Contrôleur	Vrijgegeven door
Beschrijving: Definitief Ontwerp Algemeen Overzichtstekening, blad 11 van 20 (mast 127-123)	10	zie wijzigingsplijen	5-8-2014	RGJ Caspers
	9	zie wijzigingsplijen	24-4-2014	RGJ Caspers
	Rev.	Wijziging	Datum	Naam
	Schaal: 1:1000		Formaat: A0	
Project: Randstad 380kV Noordring	Naam: R.G.J. Caspers		Datum: 19-7-2013	

TENNET Taking power further

Tekeningnummer: R3N-TEK-0010 blad 1

AutoCAD filename:

Systhe:

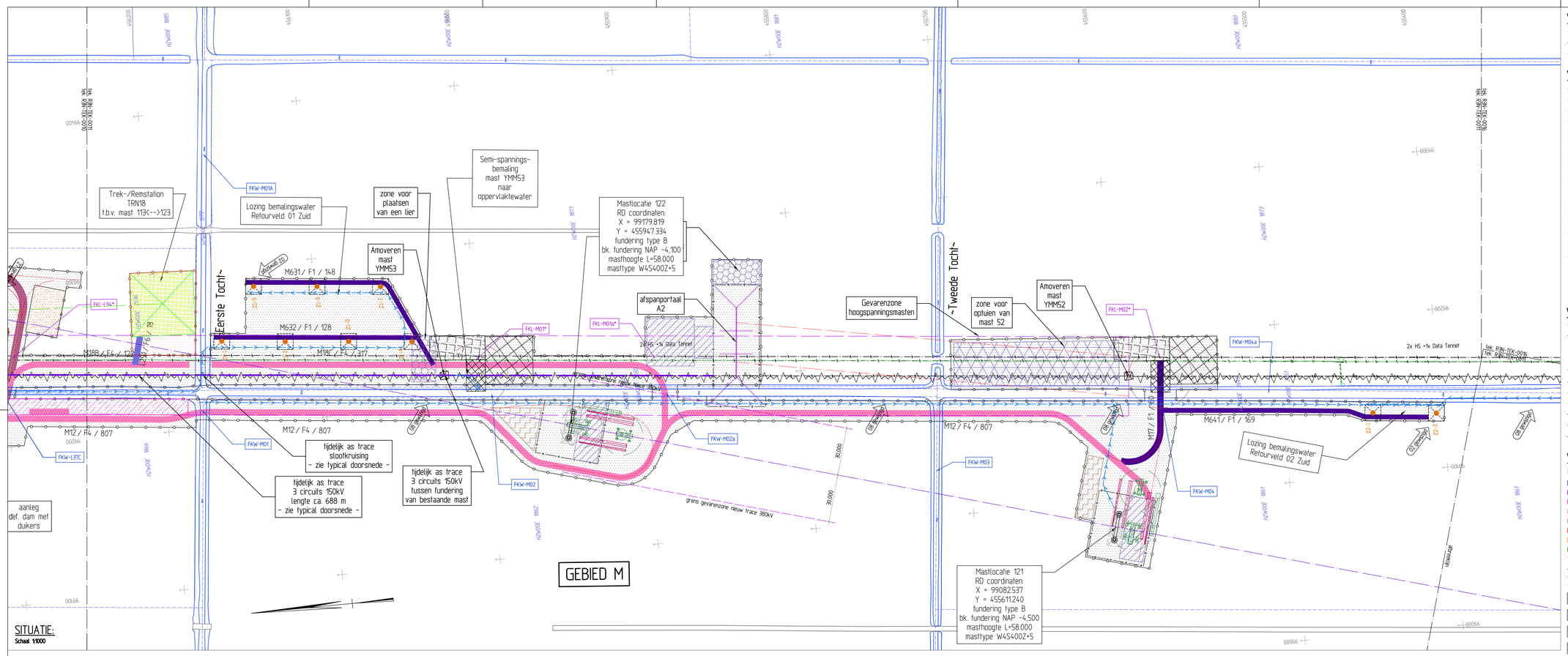

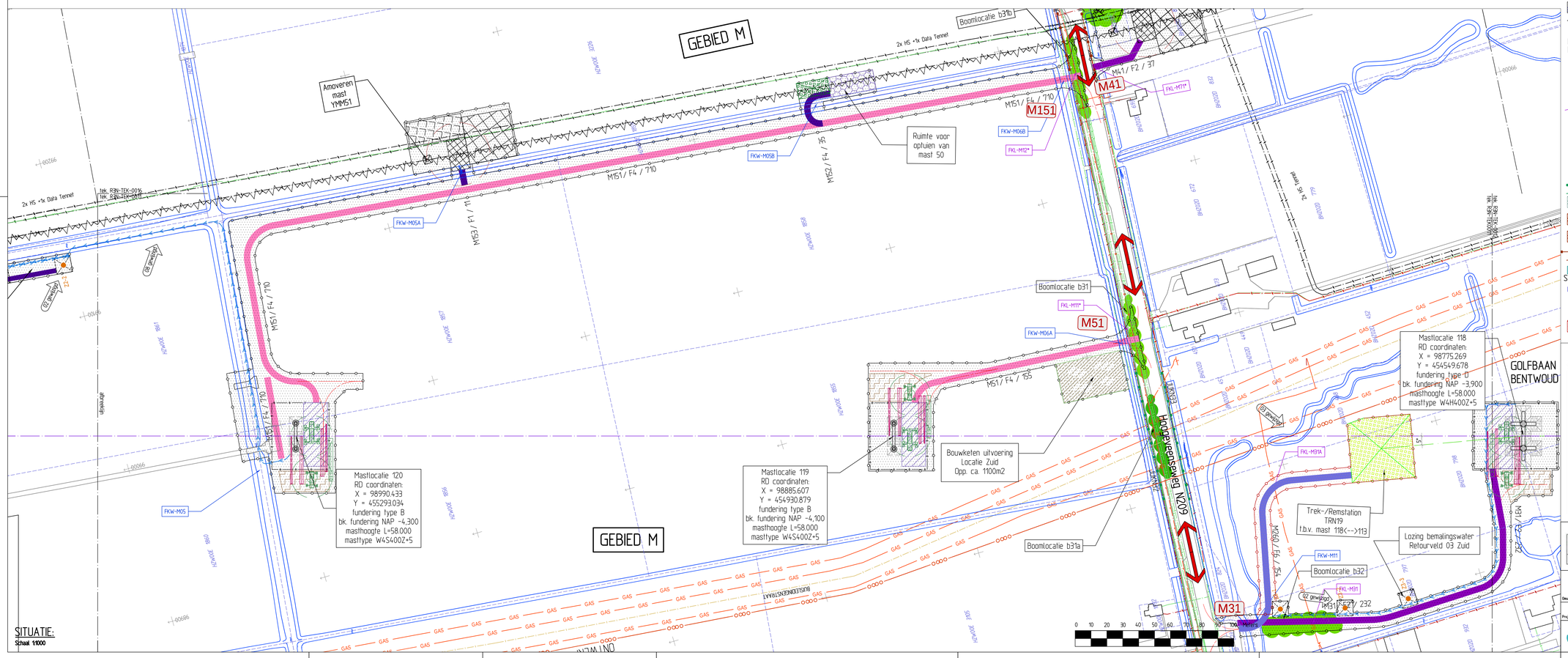

VERKLARING - ALGEMEEN

- Bestaande topografie
- Waterlijn
- Kadastrale grens en sectie/perceelnummer, uit bestand Kadperc_Bls_Zuid_Ringvaart_1905.DWG (Tennet)
- Afbreeklijn
- As-lijn
- Gemeentegrens (2010)

VERKLARING - KLIC

- Gasleiding
- Gasleiding gasunie
- Gasleiding hd
- Gasleiding ld
- Waterleiding
- Warmtenet
- Koudenet
- Chemie
- Brandstof transportleiding
- Riolering transportleiding
- Hemelwater transportleiding
- Vuilwater transportleiding
- Drainage
- Persleiding
- Vacuumleiding
- Duiker
- Straatkolk
- Trottoirkolk
- Hwa put
- Vwa put
- Drainage put
- Persleiding riooolput
- Persleiding pompput
- Gemaal
- Mantelbuis
- Glasvezel
- Cai
- Data
- Hoogspanning
- Middenspanning
- Laagspanning
- Vri (verkeersregelinstallatie)
- Ov (openbare verlichting)
- Proralt overig
- Kabelkoker
- Kabeltrace vervallen
- Gestuurde boring derden
- Zinker
- Lichtmast

VERKLARING - LEIDINGWERK:

- Aanbrengen kabel 150 kV
- Aanbrengen kabel 380 kV
- Aanbrengen las mof
- Aanbrengen ondergrondse aardingsput verbinding met aardingskabels naar mof
- Aanbrengen bovengronds combi trace (150 kV + 380 kV)
- Aanbrengen bovengronds trace 380 kV
- Gevarenzone bestaand bovengronds kabeltrace
- Beschikbare ruimte om kabels te installeren
- Te verwijderen bovengrondse trace 150 kV
- Verwijderen kabel 150 kV
- Verwijderen kabel 150 kV (hergebruik)
- Bestaande, te handhaven kabel 150 kV
- Aanbrengen gestuurde boring 150 kV
- Aanbrengen gestuurde boring 380 kV
- Aanbrengen gestuurde boring 380 kV
- Verleggen mantelbuis met glasvezelkabel
- Ontluchtingsput met straatpot bij uiteinde mantelbuis boring 380kV
- M3-4 Infiltratiepunt retourbemaling (met nummer)

VERKLARING - CIVIEL:

- K75 /F5 /374 — Nummer bouwweg (K75) / type bouwweg (F5) / lengte in meters (374)
- Bouwweg type F1, rigplaten lengterichting op maaiveld
- Bouwweg type F2, rigplaten lengterichting zandbed en doek
- Bouwweg type F3, rigplaten dwarsrichting zandbed en doek
- Bouwweg type F4, rigplaten lengterichting op houtsnippers en doek
- Bouwweg type F5, rigplaten dwarsrichting op houtsnippers en doek
- Bouwweg type G1, funderingslaag, doek, zandbed, doek
- Bouwweg type G2, funderingslaag en doek op bestaande verharding
- Permanente toegangsweg type H1, klinkerverharding, straatlaag, funderingslaag en zandbed
- Indicatie voertuigbeweging masttransport op werkterrein (bochtstraalen tot R=20m)
- Tijdelijke verharding, middels rigplaten
- Indicatieve werkgrens
- wegafzetting (barrier)
- retourbemalingsbuizen van bron naar retourbemalingsputten)
- Indicatie benodigd werkterrein
- Reservering kabel-/haspel-opstelplaats
- Reservering grondopslag uit ontgravingen
- Tijdelijke verharding bouwterrein van zand met rigplaten
- Tijdelijk of permanent dempen van watergang
- Bouwtrek
- Grens onderhoudsgebied opslagpunt
- Zone retourbemalingsput ca. 10x10m
- Werkruimte t.b.v. montage & trekken mantelbuizen in boringlengte
- Zone kraan amoveren mast opstelruimte ca. 12x20m
- Zone afbraak mastkop ca. 15x15m
- Zone afbraak mastlichaam ca. 30x30m
- Reservering voor ketenterrein
- FKL-K07 — Aanduiding kabel/leidingkruising met bouwwegen en/of leidingtrace
- FKL-L19* — Aanduiding meerdere kabel/leidingkruisingen met bouwweg en/of leidingtrace
- FKW-K11 — Aanduiding kruising watergang met bouwweg en/of leidingtrace
- indicatieve ontgravingslijn voor aanleg fundering
- funderingsconstructie
- huidraden tijdelijk mastportaal
- Zone opstelplaats kraan ca. 12x20m
- Zone montageplaats portaal ca. 30x30m
- Rem-/trekstation voor te amoveren bovengrondse hoogspanningsverbinding
- Trek- /Remstation voor tijdelijk bovengrondse hoogspanningsverbinding
- Ligging buitenste bovengrondse kabel tijdelijke hoogspanningslijnen
- J41 — Openbare wegaansluiting (met nr.)
- Routering bouwverkeer
- Gebied met te verwijderen bossage en/of bomen, ivm. bouwwerkzaamheden
- Gebied met te verwijderen bossage en/of bomen, ivm zakelijk recht bovengrondse hoogspanningverbindingen
- JUKN01 — Juk voor aanbrengen van bovengrondse hoogspanningsverbinding ter afscherming van obstakels. (door derden)
- Afscherming obstakels voor aanbrengen hoogspanningsverbinding d.m.v. een net en stellage. (door derden)
- Afscherming obstakels voor amoveren hoogspanningsverbinding d.m.v. een net en stellage.
- Afscherming obstakels voor amoveren hoogspanningsverbinding d.m.v. een net en kraanopstelling
- JUKA04 — Juk voor amoveren van bovengrondse hoogspanningsverbinding ter afscherming van obstakels.
- STELN02 — Stelling (lxbxh 40x5x11m) t.b.v. aanbrengen van een net over obstakels. (door derden)
- Bouwweg type F6, verharding t.b.v. trek-/remstations
- Trekrichting
- Trek- /Remstation voor nieuwe bovengrondse hoogspanningsverbinding
- Indicatie benodigd werkterrein voor de aanleg van Trek-/Remstations voor nieuwe bovengrondse hoogspanningsverbinding

TOPOGRAFISCH FRAGMENT

Schaal 1:50.000

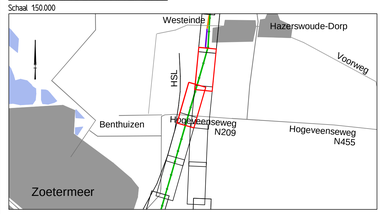

Combining Knowledge and Experience

bam COFELY FABRICOM

Randstad 380kV Noordring

			P. de Jager	E.Douwl
			Contrôleur	Vrijgegeven door
Definitief Ontwerp	10	zie wijzigingsgrijzen	1-8-2014	RGJ Caspers
Algemeen	9	zie wijzigingsgrijzen	24-4-2014	RGJ Caspers
Omschrijving: Overzichtstekening, blad 12 van 20 (mast 122-118)	Rev.	Wijziging	Datum	Naam
	Schaal	1:1000	Formaat	A0
Project: Randstad 380kV Noordring	Naam	R.G.J. Caspers	Datum	19-7-2013

TenneT Taking power further

Tekeningnummer: R3N-TEK-0011 blad 1

AutoCAD Filename:

Sjablon:

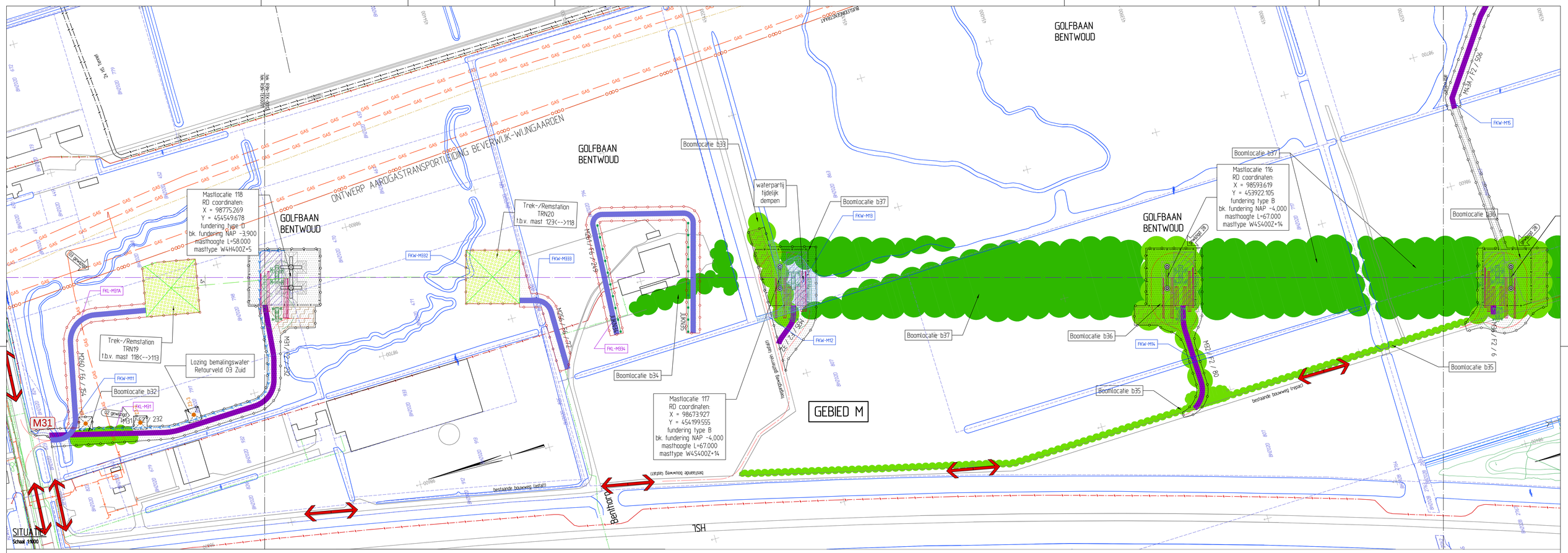

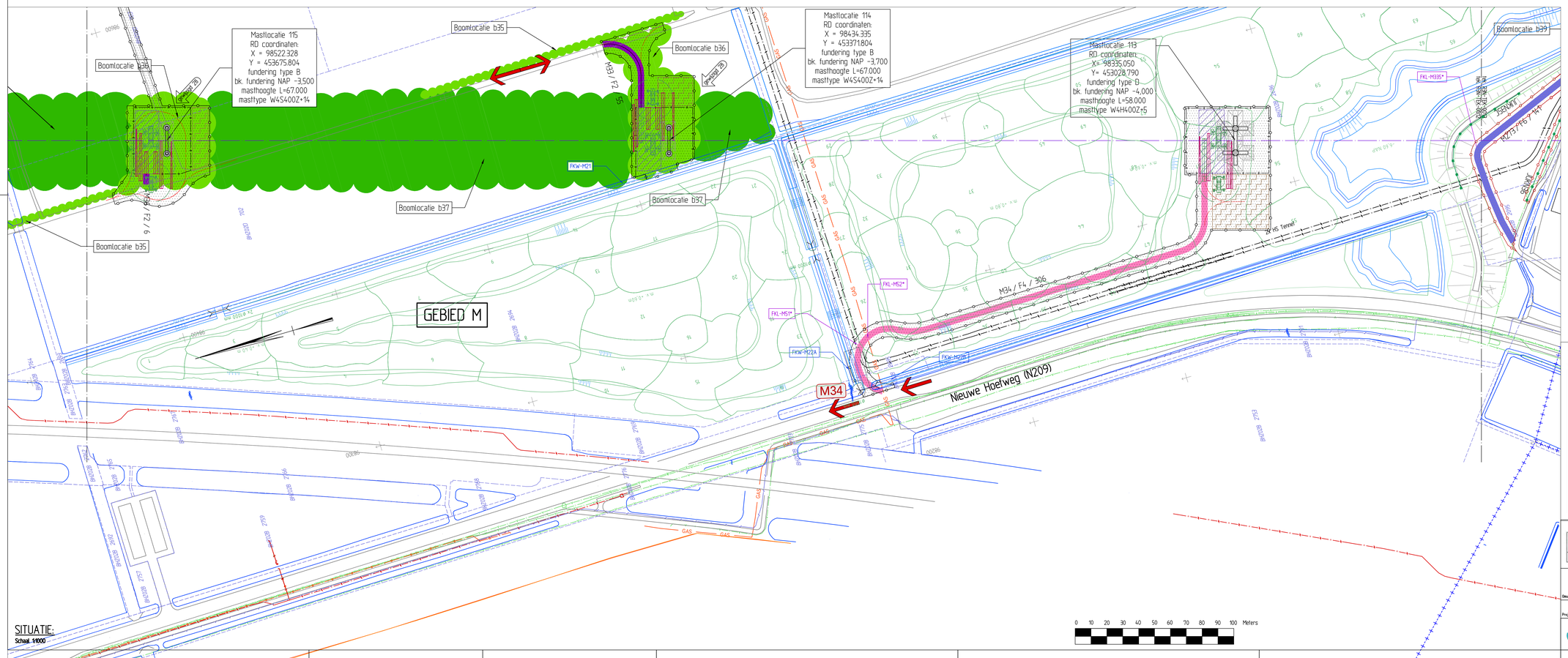

TOPOGRAFISCH FRAGMENT

Schaal 1:50.000

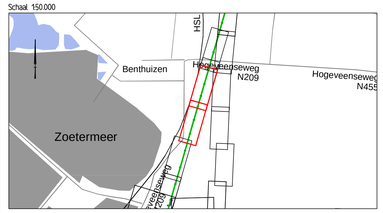

Combining Knowledge and Experience

bam COFELY FABRICOM

Randstad 380kV Noordring

		P. de Jager	E.Duvel
		Contrôleur	Vrijgegeven door

Definitief Ontwerp
Algemeen
Omschrijving: Overzichtstekening, blad 13 van 20 (118-113)

Rev.	Wijziging	Datum	Naam
10	zie wijzigingsopijlen	1-8-2014	RGJ Caspers
9	zie wijzigingsopijlen	24-4-2014	RGJ Caspers

Schaal	1:1000	Formaat	A0
Naam	R.G.J. Caspers	Datum	19-7-2013

Project: Randstad 380kV Noordring

TENNET Taking power further

Tekeningnummer: R3N-TEK-0012 blad 1

AutoCAD Filename:

Sjablon:

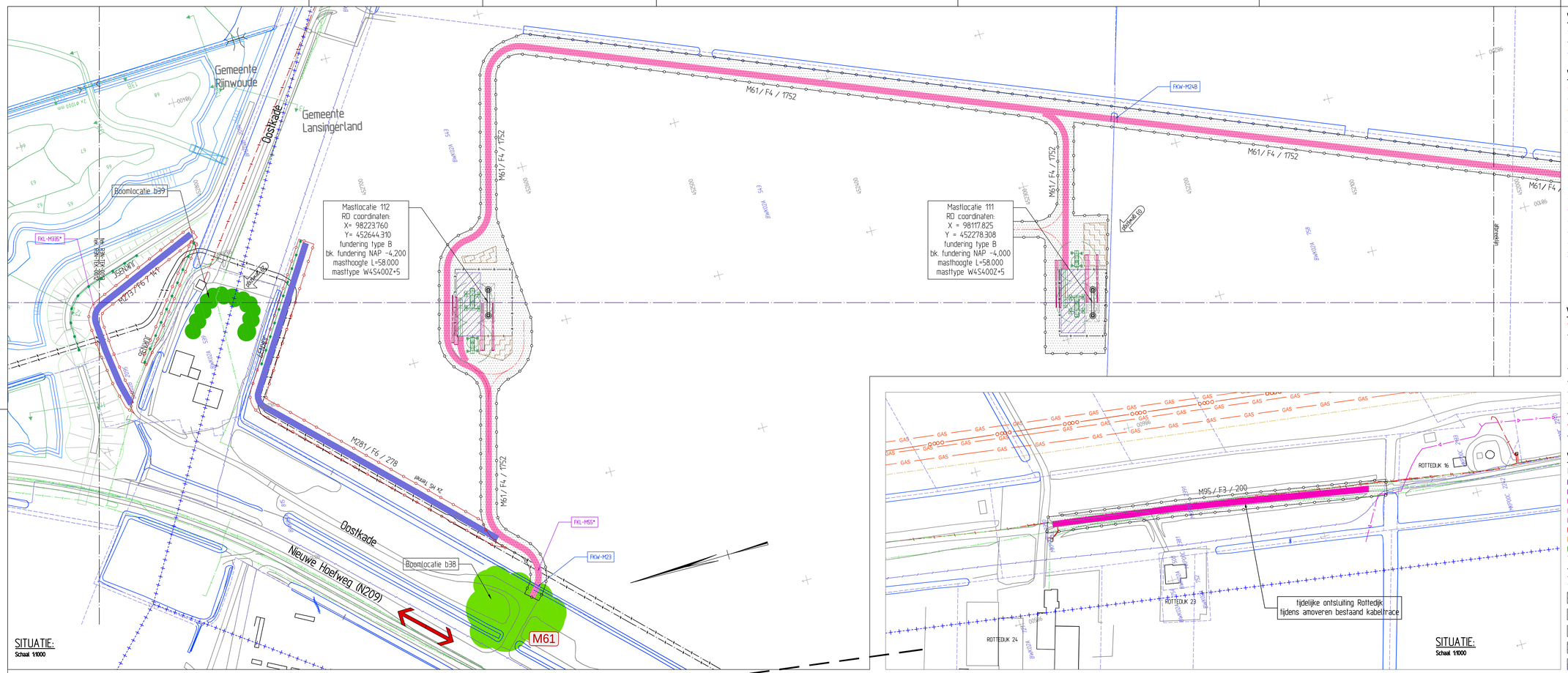

VERKLARING - ALGEMEEN

- Bestaande topografie
- Waterlijn
- Kadastrale grens en sectie/perceelnummer, uit bestand Kadperc_Bis_Zuid_Ringvaart_1905.DWG (Tennet) — MKPOOC 565
- Afbreeklijn
- As-lijn
- Gemeentegrens (2010)

VERKLARING - KLIC

- Gasleiding
- Gasleiding gasunie — GAS
- Gasleiding hd
- Gasleiding ld
- Waterleiding
- Warmtenet
- Koudenet
- Chemie
- Brandstof transportleiding
- Riolering transportleiding
- Hemelwater transportleiding
- Vuilwater transportleiding
- Drainage
- Persleiding — P
- Vacuumleiding — V
- Duiker
- Straatkolk
- Trottoirkolk
- Hwa put
- Vwa put
- Drainage put
- Persleiding inlaatput
- Persleiding pomptput
- Gemaal
- Mantelbuis
- Glasvezel
- Cai
- Data
- Hoogspanning
- Middenspanning
- Laagspanning
- Vri (verkeersregelinstallatie)
- Ov (openbare verlichting)
- Proral overig — PRA
- Kabelkoker
- Kabeltrace vervallen
- Gestuurde boring derden
- Zinker
- Lichtmast

VERKLARING - LEIDINGWERK:

- Aanbrengen kabel 150 kV
- Aanbrengen kabel 380 kV
- Aanbrengen las mof
- Aanbrengen ondergrondse aardingsput verbinding met aardingskabels naar mof
- Aanbrengen bovengronds combi trace (150 kV + 380 kV)
- Aanbrengen bovengronds trace 380 kV
- Gevarenzone bestaand bovengronds kabeltrace
- Beschikbare ruimte om kabels te installeren
- Te verwijderen bovengrondse trace 150 kV
- Verwijderen kabel 150 kV
- Verwijderen kabel 150 kV (hergebruik)
- Bestaande, te handhaven kabel 150 kV
- Aanbrengen gestuurde boring 150 kV
- Aanbrengen gestuurde boring 380 kV
- Aanbrengen gestuurde boring 380 kV
- Verleggen mantelbuis met glasvezelkabel
- Ontluchtingsput met straatpot bij uiteinde mantelbuis boring 380kV
- M3-4 Infiltratiepunt retourbemaling (met nummer)

VERKLARING - CIVIEL:

- K75 /F5 /374 — Nummer bouwweg (K75) / type bouwweg (F5) / lengte in meters (374)
- Bouwweg type F1, rigolaten lengterichting op maaiveld
- Bouwweg type F2, rigolaten lengterichting zandbed en doek
- Bouwweg type F3, rigolaten dwarsrichting zandbed en doek
- Bouwweg type F4, rigolaten lengterichting op houtsnippers en doek
- Bouwweg type F5, rigolaten dwarsrichting op houtsnippers en doek
- Bouwweg type G1, funderingslaag, doek, zandbed, doek
- Bouwweg type G2, funderingslaag en doek op bestaande verharding
- Permanente toegangsweg type H1, klinkerverharding, straatlaag, funderingslaag en zandbed
- Indicatie voertuigbeweging masttransport op werkterrein (bochtstraalen tot R=20m)
- Tijdelijke verharding middels rigolaten
- Indicatieve werkgrens
- Grens onderhoudsgebied opslagpunt
- wegafzetting (barrier)
- retourbemalingsbuizen van bron naar retourbemalingsputten)
- Zone retourbemalingsput ca. 10x10m
- Indicatie benodigd werkterrein
- Werkruimte t.b.v. montage & trekken mantelbuizen in boringlen)
- Reservering kabel-haspel-opstelplaats
- Zone kraan amoveren mast opstelruimte ca. 12x20m
- Reservering grondopslag uit ontgravingen
- Zone afbraak mastkop ca. 15x15m
- Tijdelijke verharding bouwterrein van zand met rigolaten
- Zone afbraak mastlichaam ca. 30x30m
- Tijdelijk of permanent dempen van watergang
- Reservering voor ketenterrein
- Bouwhek
- indicatieve ontgravingslijn voor aanleg fundering
- funderingsconstructie
- FKL-K07 — Aanduiding kabel/leidingkruising met bouwweg en/of leidingtrace
- FKL-L11* — Aanduiding meerdere kabel/leidingkruisingen met bouwweg en/of leidingtrace
- FKW-K11 — Aanduiding kruising watergang met bouwweg en/of leidingtrace
- hulpdraden tijdelijk mastportaal
- Zone opstelplaats kraan ca. 12x20m
- Zone montageplaats portaal ca. 30x30m
- Rem-/trekstation voor te amoveren bovengrondse hoogspanningsverbinding
- Trek- /Remstation voor tijdelijk bovengrondse hoogspanningsverbinding
- Ligging buitenste bovengrondse kabel tijdelijke hoogspanningslijnen
- J41 — Openbare wegaansluiting (met nr.)
- Rooiering bouwverkeer
- Gebied met te verwijderen bossage en/of bomen, ivm. bouwwerkzaamheden
- Gebied met te verwijderen bossage en/of bomen, ivm zakelijk recht bovengrondse hoogspanningverbindingen
- Juk voor aanbrengen van bovengrondse hoogspanningsverbinding ter afscherming van obstakels. (door derden)
- JUKN01 — Afscherming obstakels voor aanbrengen hoogspanningsverbinding d.m.v. een net en stellage. (door derden)
- Afscherming obstakels voor amoveren hoogspanningsverbinding d.m.v. een net en stellage.
- Afscherming obstakels voor amoveren hoogspanningsverbinding d.m.v. een net en kraanopstelling
- Juk voor amoveren van bovengrondse hoogspanningsverbinding ter afscherming van obstakels.
- JUKA04
- STELN02 — Stelling (6xbh 40x5xl1m) t.b.v. aanbrengen van een net over obstakels. (door derden)
- Bouwweg type F6, verharding t.b.v. trek-/remstations
- trekrichting
- Trek- /Remstation voor nieuwe bovengrondse hoogspanningsverbinding
- Indicatie benodigd werkterrein voor de aanleg van Trek-/Remstations voor nieuwe bovengrondse hoogspanningsverbinding

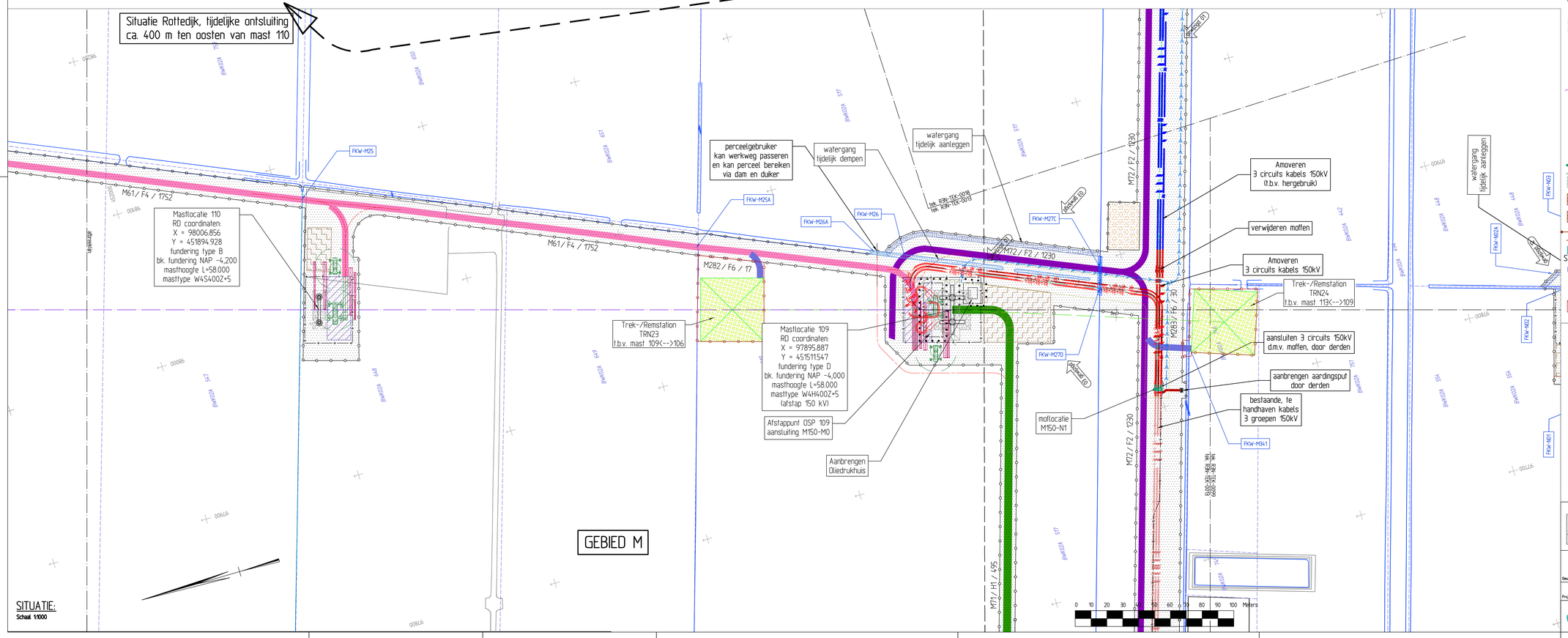

TOPOGRAFISCH FRAGMENT

Schaal 1:50.000

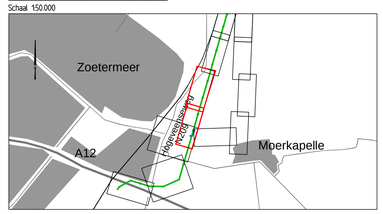

Combining Knowledge and Experience

bam — COFELY FABRICOM — KOTAC Joint-Venture

Randstad 380kV Noordring

Controleur	P. de Jager	Vrijgegeven door	E.Duwel

Rev.	Wijziging	Datum	Naam
10	zie wijzigingsgegevens	1-8-2014	RGJ Caspers
9	zie wijzigingsgegevens	24-4-2014	RGJ Caspers

Omschrijving: Definitief Ontwerp
Algemeen
Overzichtstekening, blad 14 van 20 (mast 112-109)

Schaal: 1:1000 — Formaat: A0

Datum: 19-7-2013 — Naam: R.G.J. Caspers

Project: Randstad 380kV Noordring

tennet — Taking power further

Tekeningnummer: R3N-TEK-0013 blad 1

AutoCAD-Filename: — System:

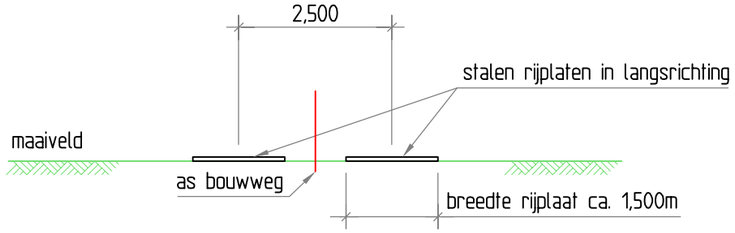

BOUWWEG TYPE F1
bodemopbouw zand/klei gronden
Schaal 1:100

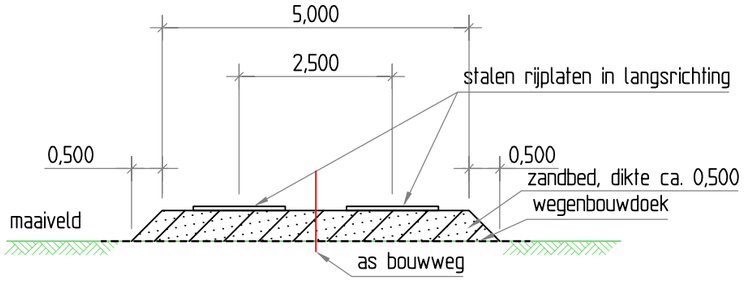

BOUWWEG TYPE F2
bodemopbouw zand/klei gronden
Schaal 1:100

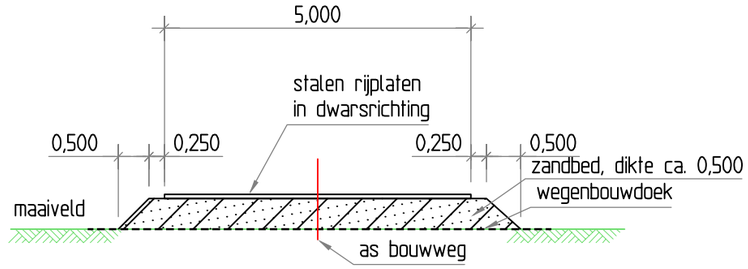

BOUWWEG TYPE F3
bodemopbouw zand/klei gronden
Schaal 1:100

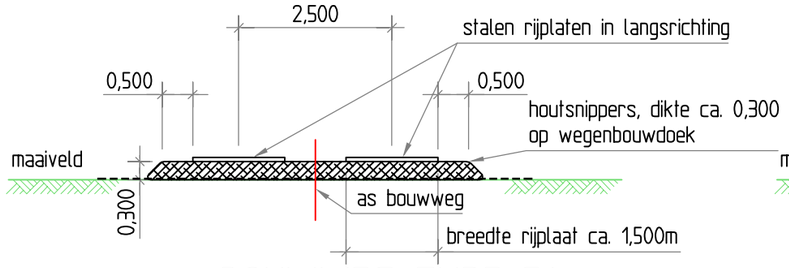

BOUWWEG TYPE F4
bodemopbouw klei/veen gronden
Schaal 1:100

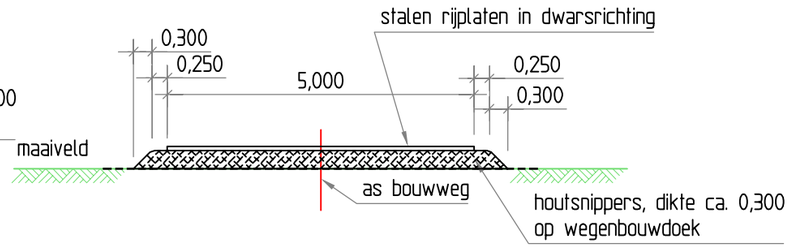

BOUWWEG TYPE F5
bodemopbouw klei/veen gronden
Schaal 1:100

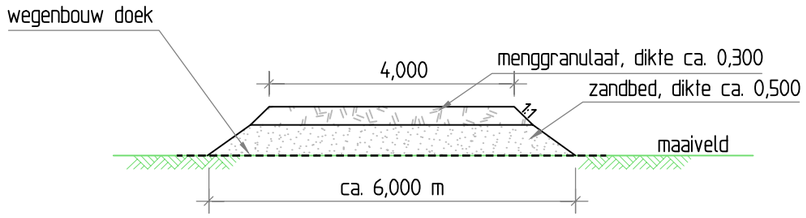

BOUWWEG TYPE G1
niet agrarische gronden
Schaal 1:100

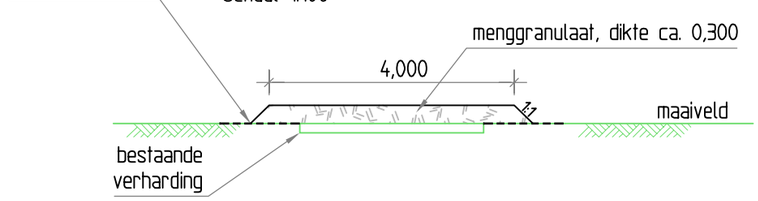

BOUWWEG TYPE G2
niet agrarische gronden
Schaal 1:100

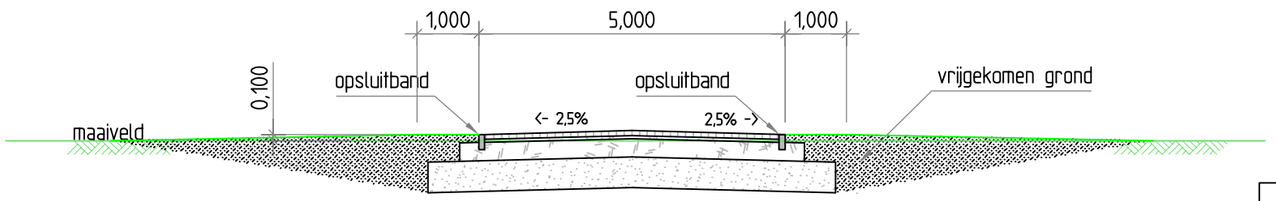

LAAGOPBOUW:
- elementenverharding **
- 0,050m straatlaag **
- 0,300m menggranulaat
- 0,500m zand

** = tijdens de uitvoering worden deze lagen nog niet aangelegd.

BOUWWEG(=PERMANENTE WEG) TYPE H1
Schaal 1:100

Bouwwegen type F1 t/m G2 voldoen aan belastingen van 0,5 kg/cm2 (5 ton/m2)

Bouwweg type H1 voldoet aan aslast 100 kN, 20 kN/m2

Combining Knowledge and Experience

bam COFELY FABRICOM GDF SUEZ

Randstad 380kV Noordring

		P. de Jager	A. Hogenboom
		Controleur	Vrijgegeven door
03			
02			
01	Logo bijgewerkt	04-10-2013	W. Vissers
Rev.	Wijziging	Datum	Naam

Omschrijving: Definitief Ontwerp
Tijdelijke en permanente werkwegen
Opbouw bouwwegen

Schaal: 1:100 | Formaat: A3

Projekt: Randstad 380kV Noordring

Naam: R.G.J. Caspers | Datum: 19-07-2013

TenneT Taking power further

Tekeningnummer: R3N-TEK-0029 blad 001

AutoCAD filename:: | Systnr:

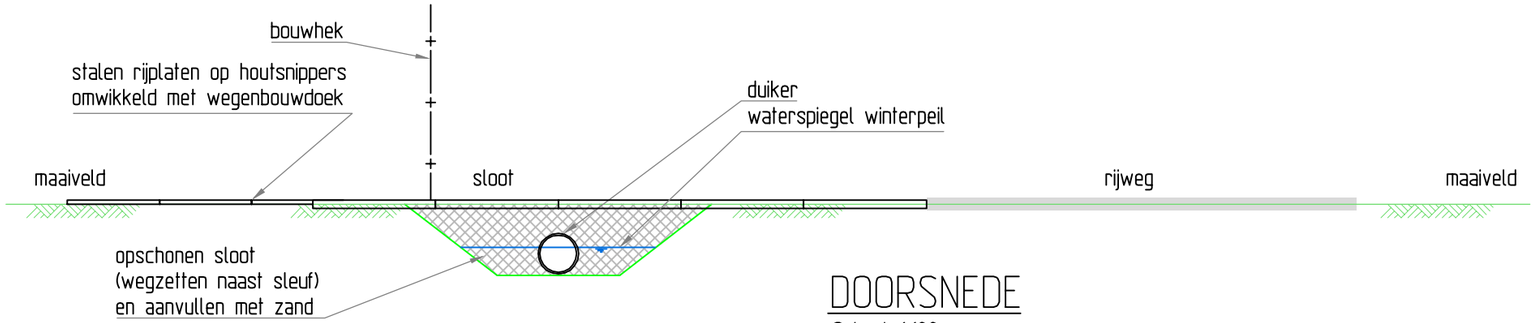

DOORSNEDE

Schaal 1:100

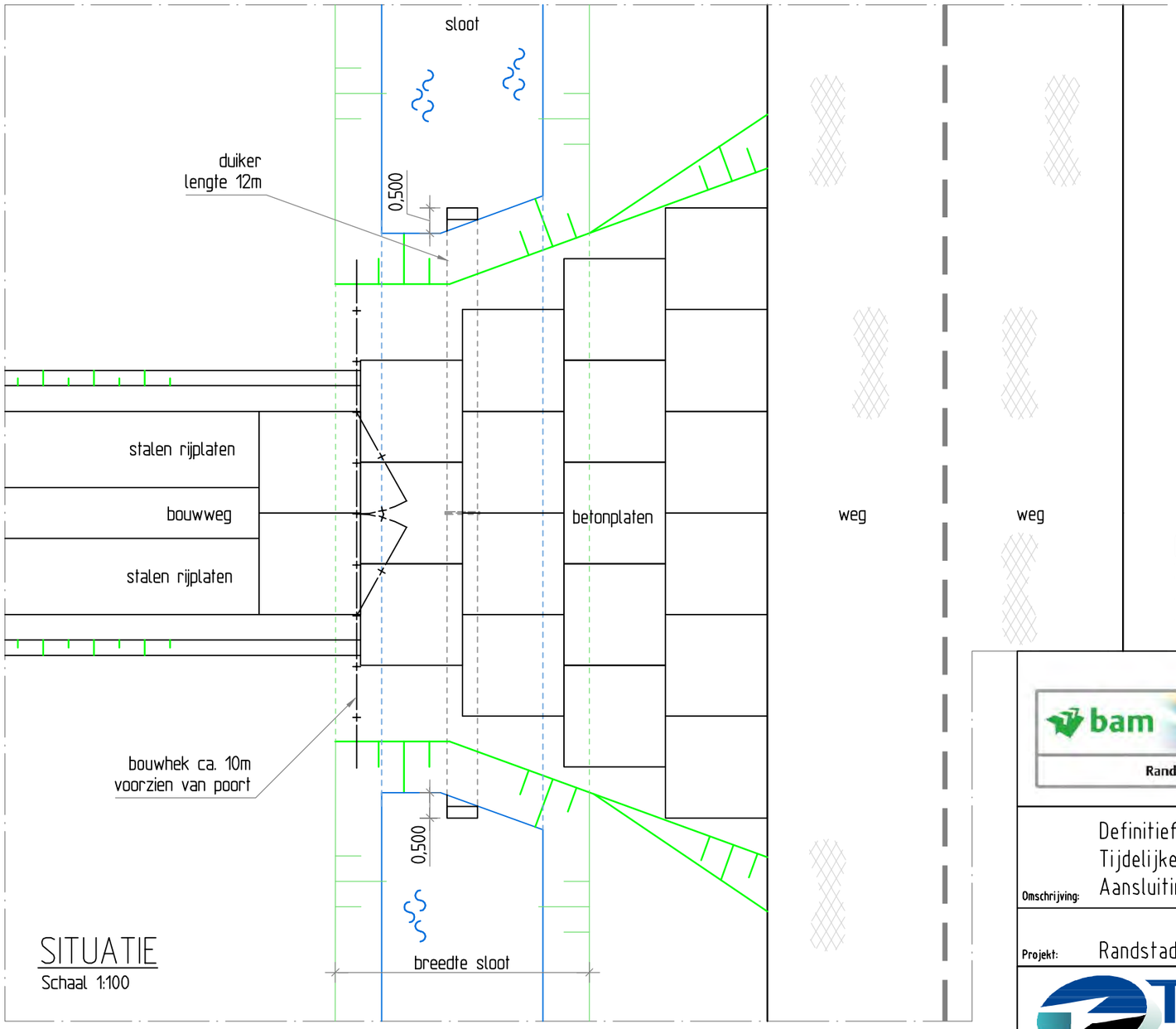

SITUATIE

Schaal 1:100

Uitgangspunten duiker

Beheersgebied Hoogheemraadschap Rijnland		
Breedte sloot	Diameter duiker	b.o.b.
1-4m	600mm	0,40m
4-6m	800mm	0,50m
>6m	1000mm	0,65m
Beheersgebied Hoogheemraadschap Schieland en Krimpenerwaard		
Breedte sloot	Diameter duiker	b.o.b.
<=5m	600mm	0,40m
>5m	800mm	0,53m

* b.o.b. maat gemeten vanaf winterpeil

OPMERKINGEN:

- Diameter en b.o.b. duiker afhankelijk van breedte sloot.
- B.o.b. gemeten vanaf winterpeil.
- Type buis staal of kunststof inw. gladwandig, keuze nader af te stemmen met waterbeheerder(s).

Combining Knowledge and Experience

bam COFELY FABRICOM GDF SUEZ

Randstad 380kV Noordring

P. de Jager — Controleur

A. Hogenboom — Vrijgegeven door

Omschrijving: Definitief Ontwerp
Tijdelijke en permanente werkwegen
Aansluiting op bestaande weg

Rev.	Wijziging	Datum	Naam
03			
02	Tabel toegevoegd	11-10-2013	W. Vissers
01	Duiker aangepast	04-10-2013	W. Vissers

Projekt: Randstad 380kV Noordring

Schaal: 1:100 — Formaat: A3

Naam: R.G.J. Caspers — Datum: 19-07-2013

TenneT — Taking power further

Tekeningnummer: R3N-TEK-0033 blad 001

AutoCAD filename::

Systnr:

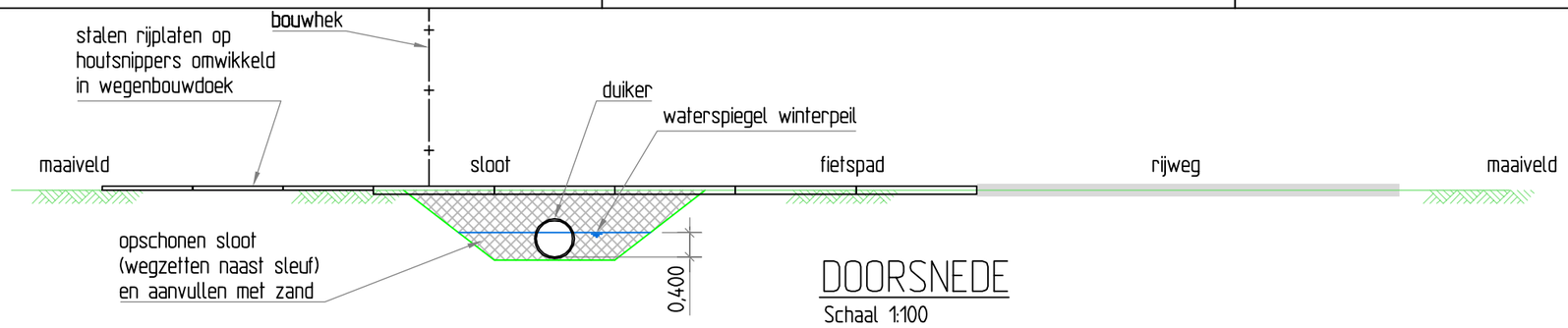

DOORSNEDE

Schaal 1:100

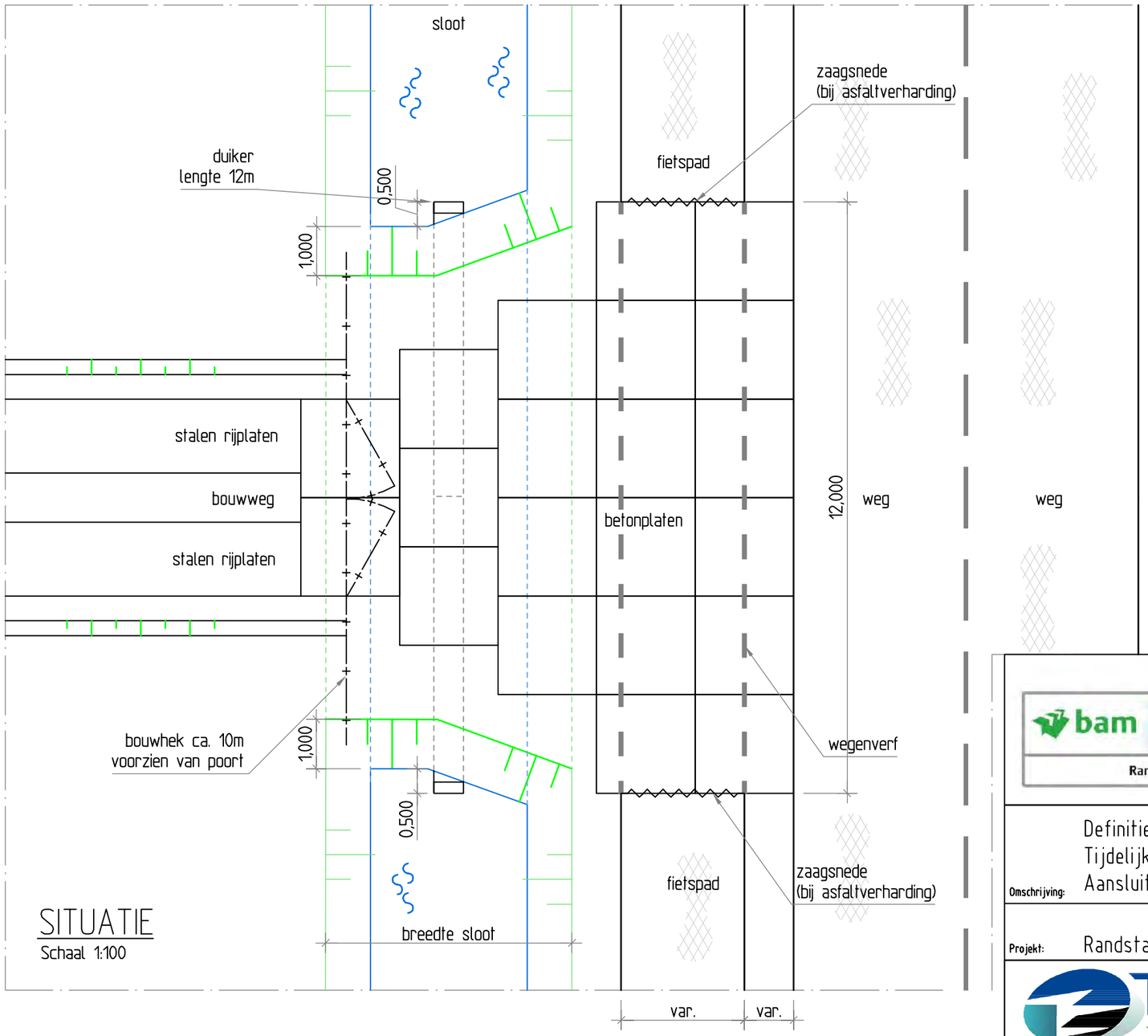

SITUATIE

Schaal 1:100

Uitgangspunten duiker

Beheersgebied Hoogheemraadschap Rijnland		
Breedte sloot	Diameter duiker	b.o.b.
1-4m	600mm	0,40m
4-6m	800mm	0,50m
>6m	1000mm	0,65m
Beheersgebied Hoogheemraadschap Schieland en Krimpenerwaard		
Breedte sloot	Diameter duiker	b.o.b.
<=5m	600mm	0,40m
>5m	800mm	0,53m

* b.o.b. maat gemeten vanaf winterpeil

OPMERKINGEN:

- Diameter en b.o.b. duiker afhankelijk van breedte sloot.
- B.o.b. gemeten vanaf winterpeil.
- Type buis staal of kunststof inw. gladwandig, keuze nader af te stemmen met waterbeheerder(s).
- Na maken zaagsneden, verharding fietspad verwijderen en in later stadium herstellen.

Combining Knowledge and Experience

bam COFELY FABRICOM GDF SUEZ

Randstad 380kV Noordring

P. de Jager — Controleur

A. Hogenboom — Vrijgegeven door

Omschrijving: Definitief Ontwerp
Tijdelijke en permanente werkwegen
Aansluiting op bestaande weg met fietspad

Rev.	Wijziging	Datum	Naam
03			
02	Tabel toegevoegd	01-11-2013	W. Vissers
01	Dam en duiker aangepast	04-10-2013	W. Vissers

Projekt: Randstad 380kV Noordring

Schaal: 1:100 — Formaat: A3

Naam: R.G.J. Caspers — Datum: 19-07-2013

TenneT Taking power further

Tekeningnummer: R3N-TEK-0034 blad 001

AutoCAD filename:: — Systnr:

Bijlage 10
Logistiek plan

Logistiek plan

Project:
Randstad 380 kV Noordring

Opdrachtgever:
TenneT TSO

Revisie	Datum	Wijzigingen ten opzichte van vorige revisie
00	18-07-2013	Eerste uitgave
01	26-09-2013	Commentaar verwerkt
02	14-11-2013	Definitief na contact belanghebbenden/toevoeging activiteit trekken lijnen
03	31-01-2014	Definitief na contact stakeholders
04	08-04-2014	Diverse wijzigingen verwerkt

Documentnummer: R3N-PLA-0004

Opsteller	*Controleur*	*Vrijgever*
E. ten Cate Technisch manager	P. de Jager Ontwerp manager	Erik Duwel Project manager

Distributie

Naam	Bedrijf
Extern	
Guido Volman	TenneT TSO
Intern	
Erik Duwel	BAM
Pieter de Jager	BAM
Eric van Rooijen	BAM
Rob Bakker	BAM
Erwin ten Cate	BAM
Michaël Desmet	Cofely Fabricom
Hein Pijnappel	Mott MacDonald

Beheer

De documentbeheerder van de combinatie verzorgt de distributie. Alleen houders van een geregistreerde kopie ontvangen automatisch aanvullingen en/of wijzigingen. Het is de verantwoordelijkheid van de houders het document up to date te houden. De laatste versie is altijd beschikbaar in ThinkProject!

Indien documenten worden geprint, geldt het volgende: een geregistreerde kopie is geldig vanaf de datum van uitgifte. Bij uitgifte van een document met een hoger revisienummer verliest de voorgaande versie automatisch haar geldigheid. Kopiehouders dienen het voorblad van een ongeldige versie te markeren met een diagonale lijn samen met de tekst 'vervallen'.

Neem bij twijfel over de geldende versie contact op met de documentbeheerder.

Inhoudsopgave

1. Inleiding 4
2. Project 4
3. traject 4
4. logistiek 4
5. aansluiting openbare weg 5
5.1. Aanrijroute Leveranciers 5
5.2. Verkeersmaatregelen montage jukken en stellingen tbv bescherming kruisende Infra 6
5.3. Planning 6
6. bijlagen 6
Bijlage 1 7
Overzichtskaart Perceel 2 met de “ Aan en afrijroutes” op openbare wegen 7
Bijlage 2 8
Bijlage 3 9

1. INLEIDING

Het project Randstad 380kV Noordring perceel 2 maakt deel uit van het project voor TenneT, waarbij tussen station Vijfhuizen en station Bleiswijk de bestaande 150 kV-leiding deels wordt vervangen en de nieuwe 380 kV-leiding wordt aangebracht. Het traject van perceel 2 strekt zich uit vanaf de Haarlemmer Ringvaart nabij Nieuwe Wetering tot het station Bleiswijk nabij Zoetermeer.

2. PROJECT

In het project Randstad 380kV Noordring perceel 2 wordt 8900 meter van de bestaande 150 kV-leiding en 1900 meter van de nieuwe 380 kV-leiding ondergronds aangebracht, waarbij 9000 meter gestuurde ondergrondse boringen worden uitgevoerd. Daarnaast worden 62 stuks funderingen voor de nieuwe masten, 2 opstijgpunten voor 380 kV en 3 afstappunten voor de 150 kV-leiding gerealiseerd. Tevens worden 32 oude hoogspanningsmasten van de bestaande 150 kV-leiding geamoveerd en worden de funderingen gesloopt en verwijderd.

3. TRAJECT

Het traject van het project Randstad 380 kV Noordring perceel 2 sluit aan op het traject van perceel 1, dat loopt vanaf het station Vijfhuizen in het noordwesten van de Haarlemmermeer tot aan de Haarlemmer Ringvaart. Het traject van perceel 2 strekt zich uit vanaf het landschapsgebied de Hanepoel aan de Haarlemmer Ringvaart bij Nieuwe Wetering naar het zuiden tot aan de autosnelweg A4, vervolgens volgt het traject de A4 aan de westelijke kant, waarbij het de Rijpwetering kruist, tot aan de afslag Hoogmade nabij Leiden. Tot hier is het systeem alleen 380 kV ondergronds en bovengronds.

Vanaf Hoogmade tot Hazerwoude Dorp zal de 150 kV ondergronds gaan en het bovengrondse systeem vervangen. Het traject steekt hier met een 150 kV boring onder de A4 door en volgt het water langs De Ruige Kade. De 380 kV verbinding gaat bovengronds over de A4 en de HSL heen.

Vervolgens buigt het traject weer naar het zuiden richting Hazerswoude-Rijndijk. Hier kruist het traject de Oude Rijn, de spoorlijn Alphen a/d Rijn – Leiden en de autoweg N11. Vanaf hier zal 150 kV en 380 kV bovengronds verder gaan.

Ten westen van Hazerswoude-Dorp vervolgt het traject zich alleen bovengronds om via het terrein van golfbaan Bentwoud de A12 ten oosten van Zoetermeer over te steken en te eindigen bij het station Bleiswijk. Bij Moerkapelle zal de bovengrondse 150kV het tracé weer verlaten en aansluiten op het bestaande ondergrondse 150 kV systeem.

4. LOGISTIEK

Voor het graven van de sleuven, het opstellen van de boormachines, de haspelwagens en de heistellingen, voor het transport van de bouwmaterialen, zoals heipalen, prefab betonnen delen, zand, en fundering materiaal voor bouwwegen, kunststofleidingwerk en wapening en de aanvoer van beton met behulp van mixers, afvoeren van de geamoveerde onderdelen van de masten, als ook voor het vervoer van de medewerkers wordt ca. 25 km bouwwegen aangelegd om de verschillende bouwplaatsen bereikbaar te maken. Ook de nevenaannemers, die verantwoordelijk is voor het plaatsen van de nieuwe hoogspanningsmasten en het trekken van de lijnen en leveren van de ondergrondse kabels, maken gebruik van de bouwwegen. In dit plan wordt beschreven hoe we de logistiek verwachten uit te voeren in de omgeving. De verwachtte aanrijroutes zijn aangegeven en de locatie waar de bouw weg eindigt en aansluit op de openbare weg.

5. AANSLUITING OPENBARE WEG

Afhankelijk van de situatie sluit soms één bouwplaats en soms meerdere bouwplaatsen via dezelfde bouw weg aan op de openbare weg. In het totaal ontstaan hierdoor 49 stuks aansluitingen van bouwwegen op de openbare weg. De ontsluitingen zijn weergegeven op de overzichtstekeningen:

- R3N-TEK-0001 Overzichtstekening blad 1 van 20
- R3N-TEK-0002 Overzichtstekening blad 2 van 20
- R3N-TEK-0003 Overzichtstekening blad 3 van 20
- R3N-TEK-0004 Overzichtstekening blad 4 van 20
- R3N-TEK-0005 Overzichtstekening blad 5 van 20
- R3N-TEK-0123 Overzichtstekening blad 6 van 20
- R3N-TEK-0006 Overzichtstekening blad 7 van 20
- R3N-TEK-0007 Overzichtstekening blad 8 van 20
- R3N-TEK-0008 Overzichtstekening blad 9 van 20
- R3N-TEK-0009 Overzichtstekening blad 10 van 20
- R3N-TEK-0010 Overzichtstekening blad 11 van 20
- R3N-TEK-0011 Overzichtstekening blad 12 van 20
- R3N-TEK-0012 Overzichtstekening blad 13 van 20
- R3N-TEK-0013 Overzichtstekening blad 14 van 20
- R3N-TEK-0099 Overzichtstekening blad 15 van 20
- R3N-TEK-0014 Overzichtstekening blad 16 van 20
- R3N-TEK-0015 Overzichtstekening blad 17 van 20
- R3N-TEK-0016 Overzichtstekening blad 18 van 20
- R3N-TEK-0017 Overzichtstekening blad 19 van 20
- R3N-TEK-0018 Overzichtstekening blad 20 van 20

Bij elke aansluiting van een bouw weg op de openbare weg worden verkeersmaatregelen getroffen, overeenkomstig de CROW-publicaties ‘Werk in Uitvoering 96a’ en ‘96b’ om te waarborgen dat werkzaamheden op of langs autosnelwegen, respectievelijk niet-autosnelwegen veilig worden uitgevoerd. Iedere aansluiting van de bouwweg op de openbare weg wordt voorzien van een afsluitbaar hek om te voorkomen dat onbevoegden het bouwterrein kunnen betreden en eventueel aanwezig vee vanaf het bouwterrein de openbare weg kan bereiken. Vee mag ook niet op de bouwwegen komen.

Alle aansluitingen zijn uniek genummerd, gebaseerd op het deelgebied van het traject waarin de bouwweg ligt en het nummer van de bijbehorende bouw weg. Er zijn meerdere typen aansluiting mogelijk op de openbare wegen. Er is getracht zoveel mogelijk gebruik te maken van bestaande aansluitingen en duikers. In overleg met de wegbeheerders en eigenaren van de percelen en K&L zal worden besloten wat voor elke beheerder en gebruiker de meest acceptabele manier is van de wegaansluiting.

Er zal op meerdere locaties een aanpassing gedaan moeten worden op de verkeerssituatie door tijdelijk belijning aan te passen en wegmeubilair te verplaatsen of te verwijderen. Tevens zullen er op een aantal locaties bomen verwijderd dienen te worden om een veilige inrit te creëren. Deze locaties worden opgenomen in het kapvergunning of melding Boswet. Na het verkrijgen van toestemming en of ontheffing van de aansluiting zal indien nodig het ontwerp gemaakt worden op de meest recente ondergrond van de aansluiting die in het bezit is van de wegbeheerder.

5.1. AANRIJROUTE LEVERANCIERS

In de omgeving zullen in overleg op strategische plaatsen borden worden neergezet met een aanduiding naar de inritten van de bouwplaatsen met de nummering die overeenkomt met het logistiek plan. Alle leveranciers zullen geïnformeerd worden door middel van flyers wat de aanrijroute voor de inritten is. Bij elke bestelling zal goed aangegeven worden, waar het afgeleverd dient te worden en wat de aanrijroute is met een telefoonnummer van de contactpersoon. Bovenstaande acties zullen moeten voorkomen dat er verkeerd wordt aangereden en onnodig moet worden gekeerd.

5.2. VERKEERSMAATREGELEN MONTAGE JUKKEN EN STELLINGEN TBV BESCHERMING KRUISENDE INFRA

Om de bestaande hoogspanningslijnen over de kruisende infra te verwijderen en de nieuwe lijnen in de nieuwe 380 kV verbinding te trekken, zullen er jukken en stellingen langs de kruisende infra geplaatste worden. Deze kruisende Infra zijn: wegen, spoorwegen, vaarwegen en panden.

Hiervoor zullen kort voor de te verwijderen en de te trekken lijnen de jukken/stellingen en kranen vanaf de openbare wegen gemonteerd of geplaatst worden. Hiervoor zal in overleg met de wegbeheerder een plan gemaakt worden om deze jukken/stellingen/kranen te monteren.

Deze zullen in overleg vanaf de openbare weg geplaatst worden en zullen in met een wegafzetting naast de weg in de berm geplaatst worden. De locaties zijn op de overzichtstekeningen aangegeven. De exacte werkzaamheden en principes zijn te lezen in het jukkenplan amovatie (R3N-R3N-0013) en jukkenplan nieuwe lijnen (R3N R3N-OWR-0037).

5.3. PLANNING

Voor de duur dat de aansluitingen openbare wegen aanwezig zijn wordt verwezen naar de uitvoeringsplanning met documentnummer R3N-PLN-0001. In deze planning staat per code van de wegaansluiting de datum van aanbrengen en verwijderen aangegeven.

6. BIJLAGEN

Bijlage 1 **Overzichtskaart Perceel 2** met de “ Aan en afrijroutes” op openbare wegen

Bijlage 2 Overzicht van alle aansluitingen op de openbare weg van het project Randstad 380kV Noordring met per aansluiting aangegeven het aantal te verwachten transportaankomsten **(Overzicht lijst LogistiekPlan)**

Bijlage 3 kenmerkblad per aansluiting met daarop aangegeven de te nemen verkeersmaatregelen?. **(Openbare wegaansluitingen)**

Bijlage 1

Overzichtskaart Perceel 2 met de “ Aan en afrijroutes” op openbare wegen

Randstad 380 kV

Noordring VKT 5.0 Bleiswijk - Zuidelijke ringvaart

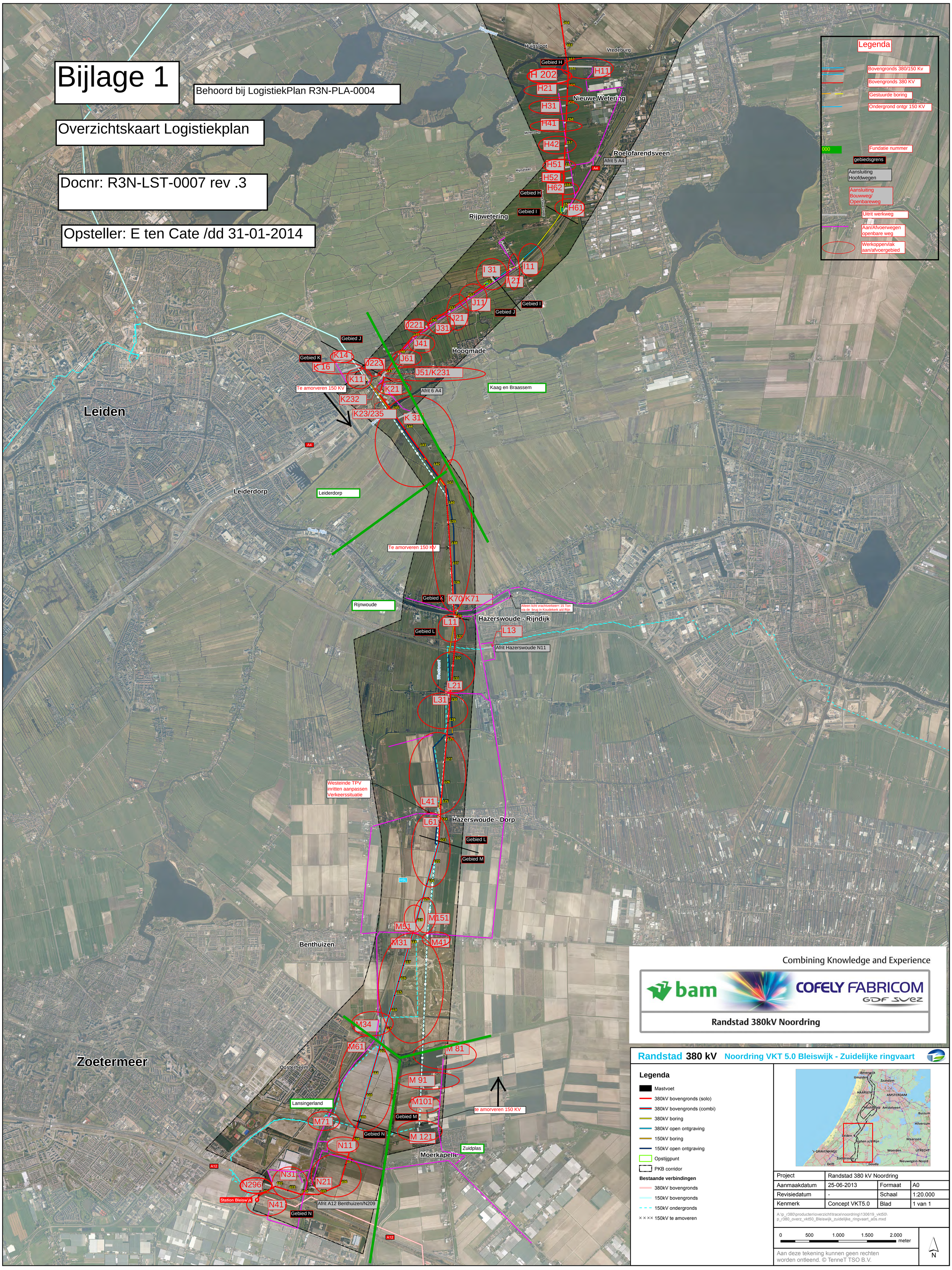

Bijlage 2

Overzicht van alle aansluitingen op de openbare weg van het project Randstad 380kV Noordring P2 met per aansluiting aangegeven het aantal te verwachten transportaankomsten
(Overzicht lijst LogistiekPlan)

Overzicht Bouwverkeer intensiteit passages aansluiting Openbare Wegen.

BIJLAGE 2

Behoord bij LogistiekPlan R3N-PLA-0004

werk Randstad 380kV Noordring
werknummer R3N
Docnr R3N-LST-0010
Opsteller E ten Cate / P. de Jager

Datum 8-4-2014
Revisie 4.01

Getal bij st vracht is vol heen+leeg terug VV (passages)

Bouwweg nr	Aanbrengen	Verwijderen	Gebruiker	wegnaam-route	Wegbeheerder	Aansluiting/wegtype	Verwachte ontsluit route	Nieuw te bouwen: Objecten Civ	Objecten Fab	Objecten Infra	Mastfundaties/ OSP Aan-/afvoeren: # Mast st	Vracht st	Pers/ bus st	Bouwwegen Aan-/afvoeren: weglengte m1	Vracht st	Pers/bus st	Ondergr/ Boring Aan-/afvoeren: Trace m1	Vracht st	Pers/bus st	Amoveren/Bypass/lijnen Aan-/afvoeren: # Mast st	vracht st	pers/bus st	Totaal vrachtwagens Aan-/afvoeren
	Zie planning R3N-PLA-0001																						
H11	jun-16	nov-16	Civ/Weg/Fab	RWZI-Bovenweg-Achterweg	Rijnland	Eigen terrein	N445 >A4 (Afrit 5)	162B/161C	T&Rem stat		2	410	488		550	100					40	100	1000
H202	sep-16	nov-16	Lijnen	Dwarsweg-Ripsellaan	Kaag & Braassem	Landbweg	N445 >A4 (Afrit 5)		T&Rem stat						50	50					40	100	90
H21	jun-16	nov-16	Civ/Weg	Dwarsweg-Ripsellaan	Kaag & Braassem	Landbweg	N445 >A4 (Afrit 5)	160A			1	168	232		250	50							418
H601	jun-16	nov-16	IT	Dwarsweg-Ripsellaan	Kaag & Braassem	Landbweg	N445 >A4 (Afrit 5)			Retourveld 01 Noord								4	16				4
H31	jul-16	nov-16	Civ/Weg	Dwarsweg-Ripsellaan	Kaag & Braassem	Landbweg	N445 >A4 (Afrit 5)	159A			1	168	232		50	10							218
H41	jul-16	nov-16	Civ/Weg	Dwarsweg-Ripsellaan	Kaag & Braassem	Landbweg	N445 >A4 (Afrit 5)	158A			1	168	232		50	10							218
H42	jul-16	nov-16	Civ/Weg	Dwarsweg-Ripsellaan	Kaag & Braassem	Landbweg	N445 >A4 (Afrit 5)	157A			1	168	232		30	10							198
H602	jun-16	nov-16	IT	Dwarsweg-Ripsellaan	Kaag & Braassem	Landbweg	N445 >A4 (Afrit 5)			Retourveld 02 Noord								4	16				4
H51	jul-16	nov-16	Civ/Weg	K Dwarsweg-Ripssellaan	Kaag & Braassem	Landbweg	N445 >A4 (Afrit 5)	156A			1	168	232		50	10							218
H52	mei-16	aug-16	IT	K Dwarsweg-Ripssellaan	Kaag & Braassem	Landbweg	N445 >A4 (Afrit 5)			Boring HD005							HDD	20	40				20
H603	jun-16	nov-16	IT	Dwarsweg-Ripsellaan	Kaag & Braassem	Landbweg	N445 >A4 (Afrit 5)			Retourveld 03 Noord								4	16				4
H62	jul-16	nov-16	Civ/Weg	K Dwarsweg-Ripssellaan	Kaag & Braassem	Landbweg	N445 >A4 (Afrit 5)	155A			1	168	232		100	30							268
H61 def	feb-16	aug-16	CIV/IT/Weg/Fab	N445 (provinciale weg)	Zuid-Holland	Prov weg	N445 >A4 (Afrit 5)	154F/OSP4	T&Rem stat	HD5 Uitr/ sectie 1	1+1	338	392		300	100	HDD	920	346		40	100	1598
I 11	apr-16	aug-16	IT	Zuidweg	Kaag & Braassem	Ontsluitingsweg	N445> A4(Afrit 5) ViaOost			HD5 Intr / sectie 2 / HD4 Intr							350m	874	300				874
I 21	apr-16	aug-16	IT	Blauwemolenweg-Zuidweg	Kaag & Braassem	Ventweg	N445> A4(Afrit 5) ViaOost			HD4 Uitr / sectie 3								10	20				10
I 31 def	mei-16	aug-16	Civ/IT/Weg/Fab	Blauwemolenweg-Zuidweg	Kaag & Braassem	Ventweg	N445> A4(Afrit 5) ViaOost	153F/OSP 5	T&R stat		1+1	338	392		300	100	350m	1380	402				2018
J 11	jun-16	okt-16	Civ/Weg	Blauwemolenweg-Zuidweg	Kaag & Braassem	Ventweg	N445>A4(Afrit5) ViaOost	152A			1	168	232		150	40							318
J 21	jun-16	okt-16	Civ/Weg	Blauwemolenweg-Zuidweg	Kaag & Braassem	Ventweg	N445>A4(Afrit5) ViaOost	151A			1	168	232		150	40							318
J 31	jun-16	okt-16	Civ/Weg	Blauwemolenweg-Zuidweg	Kaag & Braassem	Ventweg	N445>A4(Afrit5) ViaOost	150A			1	168	232		150	40							318
J221	jan-17	mrt-17	Fab/weg	Blauwemolenweg-Zuidweg	Kaag & Braassem	Ventweg	N445>A4(Afrit5) ViaOost		T&Rem Stat						50	50					40	100	90
J 41	jun-16	mrt-17	Civ/Weg//Fab	Blauwemolenweg-Zuidweg	Kaag & Braassem	Ventweg	N445>A4(Afrit5) ViaOost	149C			1	240	256		150	40							390
J 61	mei-16	mrt-17	Civ/Weg/Fab	Blauwemolenweg-Zuidweg	Kaag & Braassem	Ventweg	N445>A4(Afrit5) ViaOost	148C	T&Rem stat		1	240	256		200	100					40	100	480
J223	jan-17	mrt-17	Fab/Weg	Zuidzijderweg	Kaag en Braassem	Ventweg	N445>A4(Afrit5) ViaOost		T&Rem stat						50	50					40	100	90
J 51/(K231)	mei-16	mrt-17	Civ/Weg/Fab	Afrit6 A4/Leiden Noord	RWS/Leiderdorp	Afrit snelweg	A4>Afrit6	147C	T&Rem stat		1	240	256		200	90					40	100	480
K11 def	apr-15	dec-16	Civ//IT/weg/Fab	Zuidzijdeweg	Leiderdorp/Zuid-Holland	Ventweg	N446>A4 (Afrit6)	X74	Y74+ Noodmast+X74	HD1 Intr / sectie1	1	50	100		400	200	HDD	126	92	1.+1	280	450	856
K14	apr-15	dec-15	Fab/Weg	Hofdijklaan	Leiderdorp/Zuid-Holland	Ventweg	N446>A4 (Afrit6)		Y75						50	25					20	40	70
K16	apr-15	dec-15	Fab/Weg	Hofdijklaan	Leiderdorp/Zuid-Holland	Ventweg	N446>A4 (Afrit6)		Jukken tbv Lijnen												10	10	10
K232	jan-17	mrt-17	Fab/Weg	Afrit A4	RWS	Afrit A4	A4		T&Rems stat						50	50					40	100	90
K23	okt-16	mrt-17	Fab/Weg	Oprit A4	RWS	Oprit A4	A4		Kraannet /stellingen						100	50					20	50	120
K235	jan-17	mar-17	Fab/Weg	Bospolder	RWS	Afrit A4	N446	Uitv Keet	T&Rems stat				5000		50	50					40	100	90
K21	okt-16	mrt-17	Civ/Weg/Fab	A4 (werk afrit)	RWS	Snelweg	A4 (Afrit6) richt Adam	146C	Y73/Jukken /T&R stat		1	240	256		300	100				1+????	70	180	610
K31	mrt-16	apr-17	Civ/IT/Weg/Fab	N446(Doespolderweg)	Zuid-Holland	Prov weg	A4 (Afrit6)	145C/144A 143A/142A	Y72/Y71/Y70/Y69/T&R st	HD1 Uitr/HD2 Intr&Uitr/ Sectie 2 /HD3 Uitr/Sectie 3	4	744	952		1250	250	1290m	782	426	4	200	400	2976
K70	feb-16	mei-17	IT/Weg	Hondsdijk>Dorpstraat>N209	Rijnwoude/Zuid-Holland	Ontsluitingsweg	Hondsdijk Leiden Alphen			Sectie 5 (zuidelijke deel)					150	50	100	100	50				250
K71	feb-16	mei-17	Civ/IT/Weg/Fab	Hondsdijk>Dorpstraat>N209	Rijnwoude/Zuid-Holland	Ontsluitingsweg	Hondsdijk Leiden Alphen	141C/140A/139A 138A/137A/136A 135B	Y68/Y67/Y66/Y65Y64/T&R st	HD3Intr/Sectie 3 Sectie 4/Sectie 5 HD11/12 Intr	7	1350	1648		2100	400	2200	1096	664	5	190	450	4736 0 0
L11	nov-16	mei-17	Civ/Weg/Fab	Rijndijk>N209	Rijnwoude/Zuid-Holland	Onsluitingsweg	N11 (Hazerswoude)	134B/133C	Y63/Y62/T&R stat/Stelling Spoor		2	410	488		550	150				2	250	400	1210
L 13	dec-16	jan-17	Fab/Weg	N11	RWS	Werkweg	N11 (Hazerswoude)	Jukken N11	Jukken N11 /T&R st/Stellingen Spoor						150	100					160	250	310
L 21	feb-16	mei-17	Civ/IT/Weg/Fab	Vierheemskinderweg> N209	Rijnwoude/Zuid-Holland	Polderweg	N11 (Hazerswoude)	132C/131A	Y61/Y60/T&R stat	HD11/12 Uitr/ Sectie 6/HD13 Uitr/	2	408	488		550	150	560m	644	484	2	100	160	1702
L 31	feb-16	jun-17	Civ/IT/Weg/Fab	Vierheemskinderweg> N209	Rijnwoude/Zuid-Holland	Polderweg	N11 (Hazerswoude)	130A/129A	X59	HD13 Intr/HD 14 Intr/ Sectie 7	2	336	464		500	100	580m	598	438	1	30	80	1464
L 41	mrt-16	jun-17	Civ/IT/Weg/Fab	Westeinde>Dorpstraat> N209	Rijnwoude/Zuid-Holland	Ontsluitingsweg	N209/N11	128A/127A 126A/125B	Y58/Y57/Y56/Y55	Sectie 8/HD15 Uitr/Sectie 9	4	672	928		1200	250	1325m	1036	656	4	120	320	3028 0
L 61 def	apr-15	jun-17	Civ/IT/Weg/Fab	Westeinde>Dorpstraat> N209	Rijnwoude/Zuid-Holland	Ontsluitingsweg	N209/N11	124B/123D/OSP 122B/121B	Y54/Y53/Y52/T&R stat/Bypass 52-54	HD 15 Intr/ Sectie 9	2+1 2	870	1062		1250	300	500m	368	230	3	450	320	2938 0 0
M 51	mrt-16	aug-16	Civ/Weg	N 209	Zuid-Holland	Prov weg	N209/N11/A12	119B/uitv keet			1	170	5232		50	10							220
M 151	mrt-16	mrt-17	Fab/Weg	N 209	Zuid-Holland	Prov Weg/eigen terrein	N209/N11/A12	120B	Y51		1	170	232		500	100				1	30	80	700
M 31	mrt-16	mrt-17	Civ/Weg/fab	N 209	Zuid-Holland	Prov weg	N209/N11/A12	118B/117B/116B 115B/114B	Y49/Y48/Y47/Y46/T&R stat/Jukken		5	850	1060		1050	250				4	200	520	2100 0
M 41	jan-17	mrt-17	Fab/Weg	N 209	Zuid-Holland	Prov weg	N209/N11/A12		Y50						10	5				1	30	80	40
M34	apr-16	aug-16	Civ/Weg	N 209	Zuid-Holland	Prov weg	N209/N11/A12	113D	T&R stat/Jukken		1	260	256		450	180					100	160	810
M 61	mrt-16	sep-16	Civ/Weg	N 209	Zuid-Holland	Prov weg	N209/N11/A12	112B/1111B/110B 109D/OSP	T&R stat	Sectie 1/2 Afstap 109	3 1+1	870	1322		1300	310	600m	737	598		80	200	2987 0
M71 def	mrt-16	sep-16	Weg	N209 Hoefweg	Zuid Holland	Provweg	N209/N11/A12	Geen vrachtverkeer	Geen vrachtverkeer	Geen vrachtverkeer		0	in overleg		0	in overleg		0	in overleg		0		0
M 81	feb-17	mrt-17	Fab/Weg	Herenweg>Bredeweg	Zuidplas/Lansingerland	Polderweg	A12		Y45						50	10				1	30	80	80
M 91	feb-17	mrt-17	Fab/Weg	Herenweg>Bredeweg	Zuidplas	Polderweg	A12		Y44						50	10				1	30	80	80
M 101	mrt-17	mrt-17	Fab/Weg	Herenweg>bredenweg	Zuidplas	Polderweg	A12		Y43						50	10				1	30	80	80
M 121	apr-16	mrt-17	Fab/Weg/IT	Noorddijk>Herenweg>Bredenweg	Zuidplas	Landbweg	A12		Y42A/Sttion Moerk	Sectie 1 /2/Stat Moerkapelle					10	5	500m	138	92	1	80	200	228 0
N 11	apr-16	aug-16	Civ/Weg	Dwarslaan>N209	Lansingerland/Zuid-Holland	Ontsluitingsweg	A12	108A			1	168	232		350	50							518
N 21	apr-16	sep-16	Civ/Weg	Kruisweg>Dwarslaan	Lansingerland	Ontsluitingsweg	A12	107A/106C 105C	T&R stat/Jukken/stelling		3	648	744		750	150					160	300	1558 0
N 31	mrt-14	sep-16	Civ/Weg	Facetlaan>N209	Lansingerland/Zuid-Holland	Ontsluitingsweg	A12	102C/103A/104C	T&R stat/ stelling		3	448	744		250	150					120	300	818
N296	mei-16	sep-16	Fab/Weg	Facetlaan>N209	Lansingerland/Zuid Holland	Ontsluitingsweg	A12		T&R stat						50	50					40	100	90
N 41	mei-16	sep-16	Civ/Weg	Laan v Mathenesse>N209	Lansingerland/Zuid-Holland	Ontsluitingsweg	A12	101F	T&R stat		1	198	232		300	100					40	100	538 0

HH SK + Hoogheemraadschap Schieland en de Krimpepenerwaard

Alle wegen buiten de bebouwde kom vallen onder HH SK of de Provincie

Bijlage 3

Kenmerkblad per aansluiting met daarop aangegeven de te nemen verkeersmaatregelen.
(Openbare wegaansluitingen)

Bijlage 3 revisie 4 8-4-2014

Behoord bij Logistiek plan R3N-PLA-0004

Combining Knowledge and Experience

bam COFELY FABRICOM

Randstad 380kV Noordring

Kenmerkenblad
Openbare Wegaansluitingen

Project Randstad 380 kV Noordring

In deze bijlage vindt u de lokaties en situaties van de aansluitingen op de openbare wegen

Gemeente:	Kaag en Braassem
	Leiderdorp
	Rijnwoude
	Lansingerland
	Zuidplas
Rijk	RWS
Provincie:	Zuid Holland
Waterschap:	Hoogheemraadschap Rijnland
	Hoogheemraadschap Schieland en Krimpenerwaard
Docnr	R3N-LST-0012
rev	04 (op basis van versie 08 van de bijbehorende overzichtstekeningen)
Opgesteld	8-4-2014
Opsteller	E. ten Cate / P. de Jager
Functie	Technisch Manager

Combining Knowledge and Experience

Randstad 380kV Noordring

Opdrachtgever	TenneT TSO B.V.
Project	Randstad 380 kV Noordring

Datum	8-apr-14
Projectnummer	R3N
Status	Definitief tbv vergunning aanvraag
Opsteller	E. ten Cate / P. de Jager
Bijbehorende overzichtstekening	R3N-TEK-0001

Locatienummer H11

Soort weg	Eigen Weg/Ontsluitingsweg	**Naam weg**	Bovenweg
Wegbeheerder	Hoogheemraadschap Rijnland		

Maatregelen Kruisingen

	Object	Methode	Tekeningnummer	Periode
1	Geen	Geen	Geen	zie planning R3N-PLN-0001-03
2				
3				
4				

Verkeersmaatregelen

1 In overleg met de wegbeheerder en RWZI beheerder
2
3
4

Bijzonderheden

1 Toestemming overleg RWZI.

Alternatief NVT

Situatie foto

Opdrachtgever	TenneT TSO B.V.
Project	Randstad 380 kV Noordring

Datum	8-apr-14
Projectnummer	R3N
Status	Definitief tbv vergunning aanvraag
Opsteller	E. ten Cate / P. de Jager
Bijbehorende overzichtstekening	R3N-TEK-0001

Locatienummer H202

Soort weg	Eigen Weg/Ontsluitingsweg	**Naam weg**	Dwarsweg
Wegbeheerder	Gemeente Kaag en Braassem		

Maatregelen Kruisingen

	Object	Methode	Tekeningnummer	Periode
1	sloot	brug	R3N-TEK-0030	zie planning R3N-PLN-0001-03
2	Geen K&L			
3				
4				

Verkeersmaatregelen

1 In overleg met de wegbeheerder
2
3
4

Bijzonderheden

1 Ontheffing van aslast
van 3,6 T naar 10T.

Alternatief NVT

Combining Knowledge and Experience

bam COFELY FABRICOM GDF SUEZ

Randstad 380kV Noordring

Opdrachtgever	TenneT TSO B.V.
Project	Randstad 380 kV Noordring

Datum	8-apr-14
Projectnummer	R3N
Status	Definitief voor vergunningaanvraag
Opsteller	E. ten Cate / P. de Jager
Bijbehorende overzichtstekening	R3N-TEK-0001

Locatienummer H21

Soort weg	Landbouwweg	**Naam weg**	Dwarsweg
Wegbeheerder	Gemeente Kaag en Braassem		

Maatregelen Kruisingen

	Object	Methode	Tekeningnummer	Periode
1	sloot	brug	R3N-TEK-0030	zie planning R3N-PLN-0001-03
2	Geen K&L			
3				
4				

Verkeersmaatregelen

1 In overleg met de wegbeheerder.
2
3
4

Bijzonderheden

1 Ontheffing van aslast
van 3,6 T naar 10T.

Situatie foto

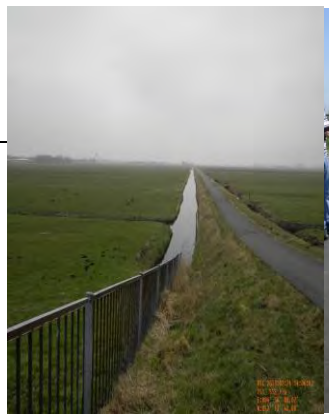

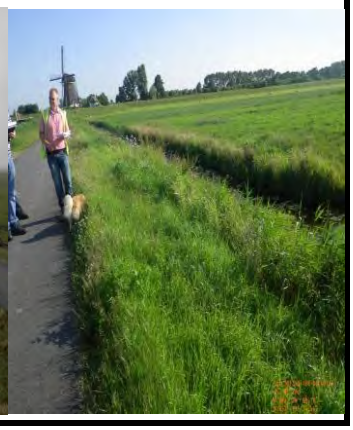

Opdrachtgever	TenneT TSO B.V.
Project	Randstad 380 kV Noordring

Datum	8-apr-14
Projectnummer	R3N
Status	Definitief tbv vergunning aanvraag
Opsteller	E. ten Cate / P. de Jager
Bijbehorende overzichtstekening	R3N-TEK-0001

Locatienummer H601

Soort weg	Eigen Weg/Ontsluitingsweg	**Naam weg**	Dwarsweg
Wegbeheerder	Gemeente Kaag en Braassem		

Maatregelen Kruisingen

	Object	Methode	Tekeningnummer	Periode
1	sloot	brug	R3N-TEK-0030	zie planning R3N-PLN-0001-03
2	Geen K&L			
3				
4				

Verkeersmaatregelen

1 In overleg met de wegbeheerder
2
3
4

Bijzonderheden

1 Ontheffing van aslast
van 3,6 T naar 10T.

Alternatief NVT

Combining Knowledge and Experience

Randstad 380kV Noordring

Opdrachtgever	TenneT TSO B.V.
Project	Randstad 380 kV Noordring

Datum	8-apr-14
Projectnummer	R3N
Status	Definitief voor vergunningaanvraag
Opsteller	E. ten Cate / P. de Jager
Bijbehorende overzichtstekening	R3N-TEK-0001

Locatienummer H31

Soort weg	Landbouwweg	**Naam weg**	Dwarsweg
Wegbeheerder	Gemeente Kaag en Braassem		

Maatregelen Kruisingen

	Object	Methode	Tekeningnummer	Periode
1	sloot	brug	R3N-TEK-0030	zie planning R3N-PLN-0001-03
2	Geen K&L			
3				
4				

Verkeersmaatregelen

1 In overleg met de wegbeheerder.
2
3
4

Bijzonderheden

1 Ontheffing van aslast
van 3,6 T naar 10T.

Situatie foto

Combining Knowledge and Experience

Randstad 380kV Noordring

Opdrachtgever	TenneT TSO B.V.
Project	Randstad 380 kV Noordring

Datum	8-apr-14
Projectnummer	R3N
Status	Definitief voor vergunningaanvraag
Opsteller	E. ten Cate / P. de Jager
Bijbehorende overzichtstekening	R3N-TEK-0001

Locatienummer H41

Soort weg	Landbouwweg	**Naam weg**	Dwarsweg
Wegbeheerder	Gemeente Kaag en Braassem		

Maatregelen Kruisingen

	Object	Methode	Tekeningnummer	Periode
1	sloot	brug	R3N-TEK-0030	zie planning R3N-PLN-0001-03
2	Geen K&L			
3				
4				

Verkeersmaatregelen

1 In overleg met de wegbeheerder.
2
3
4

Bijzonderheden

1 Ontheffing van aslast
van 3,6 T naar 10T.

Situatie foto

Combining Knowledge and Experience

Randstad 380kV Noordring

Opdrachtgever	TenneT TSO B.V.
Project	Randstad 380 kV Noordring

Datum	8-apr-14
Projectnummer	R3N
Status	Definitief voor vergunningaanvraag
Opsteller	E. ten Cate / P. de Jager
Bijbehorende overzichtstekening	R3N-TEK-0002

Locatienummer H42

Soort weg	Landbouwweg	**Naam weg**	Dwarsweg
Wegbeheerder	Gemeente Kaag en Braassem		

Maatregelen Kruisingen

	Object	Methode	Tekeningnummer	Periode
1	sloot	dam/duiker-aanp	R3N-TEK-0033	zie planning R3N-PLN-0001-03
2	K&L	Beschermen	R3N-TEK-0032	
3				
4				

Verkeersmaatregelen

1 In overleg met de wegbeheerder.
2
3
4

Situatie foto

Bijzonderheden

1 Ontheffing van aslast
van 3,6 T naar 10T.

2 Bestaande dam verlengen

Combining Knowledge and Experience

Randstad 380kV Noordring

Opdrachtgever	TenneT TSO B.V.
Project	Randstad 380 kV Noordring

Datum	8-apr-14
Projectnummer	R3N
Status	Definitief voor vergunningaanvraag
Opsteller	E. ten Cate / P. de Jager
Bijbehorende overzichtstekening	R3N-TEK-0002

Locatienummer H602

Soort weg	Landbouwweg	**Naam weg**	Dwarsweg
Wegbeheerder	Gemeente Kaag en Braassem		

Maatregelen Kruisingen

	Object	Methode	Tekeningnummer	Periode
1	sloot	dam/duiker-aanp	R3N-TEK-0033	zie planning R3N-PLN-0001-03
2	K&L	Beschermen	R3N-TEK-0032	
3				
4				

Verkeersmaatregelen

1 In overleg met de wegbeheerder.
2
3
4

Situatie foto

Bijzonderheden

1 Ontheffing van aslast
van 3,6 T naar 10T.

2 Bestaande dam verlengen

Combining Knowledge and Experience

Randstad 380kV Noordring

Opdrachtgever	TenneT TSO B.V.
Project	Randstad 380 kV Noordring

Datum	8-apr-14
Projectnummer	R3N
Status	Definitief voor vergunningaanvraag
Opsteller	E. ten Cate / P. de Jager
Bijbehorende overzichtstekening	R3N-TEK-0002

Locatienummer H51

Soort weg	Landbouwweg	**Naam weg**	Korte Dwarsweg
Wegbeheerder	Gemeente Kaag en Braassem		

Maatregelen Kruisingen

	Object	Methode	Tekeningnummer	Periode
1	sloot	dam/duiker-aanp	R3N-TEK-0033	zie planning R3N-PLN-0001-03
2	K&L	Beschermen	R3N-TEK-0032	
3				
4				

Verkeersmaatregelen

1 In overleg met de wegbeheerder.
2
3
4

Situatie foto

Bijzonderheden

1 Ontheffing van aslast
van 3,6 T naar 10T.

2 Bestaande dam verlengen/breden

3 Verkeerstechnisch lastig ivm aansluiting Ripselaan

4 Dam is tevens Peilscheiding

Combining Knowledge and Experience

Randstad 380kV Noordring

Opdrachtgever	Tennet TSO B.V.
Project	Randstad 380 kV Noordring

Datum	8-apr-14
Projectnummer	R3N
Status	Definitief voor vergunningaanvraag
Opsteller	E. ten Cate / P. de Jager
Bijbehorende overzichtstekening	R3N-TEK-0002

Locatienummer H52

Soort weg	Landbouwweg	**Naam weg**	Korte Dwarsweg
Wegbeheerder	Gemeente Kaag en Braassem		

Maatregelen Kruisingen

	Object	Methode	Tekeningnummer	Periode
1	sloot	dam/duiker-aanp	R3N-TEK-0033	zie planning R3N-PLN-0001-03
2	K&L	Beschermen	R3N-TEK-0032	
3				
4				

7

Verkeersmaatregelen

1 In overleg met de wegbeheerder.
2
3
4

Situatie foto

Bijzonderheden

1 Ontheffing van aslast van 3,6 T naar 10T.

2 Bestaande dam verlengen/breden

3 Alleen noodzakelijk voor uitleggen mantelbuizen voor Boring HDD05

Combining Knowledge and Experience

Randstad 380kV Noordring

Opdrachtgever	Tennet TSO B.V.
Project	Randstad 380 kV Noordring

Datum	8-apr-14
Projectnummer	R3N
Status	Definitief voor vergunningaanvraag
Opsteller	E. ten Cate / P. de Jager
Bijbehorende overzichtstekening	R3N-TEK-0002

Locatienummer H62

Soort weg	Provinciale weg	Naam weg	N445
Wegbeheerder	Gemeente Kaag en Braassem		

Maatregelen Kruisingen

	Object	Methode	Tekeningnummer	Periode
1	sloot	Dam/Duiker-aanp	R3N-TEK-0033	zie planning R3N-PLN-0001-03
2				
3				
4				

Verkeersmaatregelen

1 In overleg met de wegbeheerder.
2
3
4

Situatie foto

Bijzonderheden

1 Ontheffing van aslast van 3,6 T naar 10T.
2 Nieuwe dam maken

Combining Knowledge and Experience

Randstad 380kV Noordring

Opdrachtgever	Tennet TSO B.V.
Project	Randstad 380 kV Noordring

Datum	8-apr-14
Projectnummer	R3N
Status	Definitief voor vergunningaanvraag
Opsteller	E. ten Cate / P. de Jager
Bijbehorende overzichtstekening	R3N-TEK-0002

Locatienummer H603

Soort weg	Provinciale weg	Naam weg	N445
Wegbeheerder	Gemeente Kaag en Braassem		

Maatregelen Kruisingen

	Object	Methode	Tekeningnummer	Periode
1	Bestaande inrit gebruiken			zie planning R3N-PLN-0001-03
2				
3				
4				

Verkeersmaatregelen

1 In overleg met de wegbeheerder.
2
3
4

Situatie foto

Bijzonderheden

1 Gebruik maken van bestaande inrit
2

Combining Knowledge and Experience

Randstad 380kV Noordring

Opdrachtgever	TenneT TSO B.V.
Project	Randstad 380 kV Noordring

Datum	8-apr-14
Projectnummer	R3N
Status	Definitief voor vergunningaanvraag
Opsteller	E. ten Cate / P. de Jager
Bijbehorende overzichtstekening	R3N-TEK-0002

Locatienummer H61

Soort weg	Provinciale weg	Naam weg	N445
Wegbeheerder	Provincie Zuid Holland		

Maatregelen Kruisingen

	Object	Methode	Tekeningnummer	Periode
1	sloot	Dam/Duiker-aanp	R3N-TEK-0033	zie planning R3N-PLN-0001-03
2	K&L	Beschermen	R3N-TEK-0032	
3				
4				

Verkeersmaatregelen

1 In overleg met de wegbeheerder.
2
3
4

Bijzonderheden

1 Wordt def toegangsweg tot OSP 4

2 Bestaande dam verlengen/breden

3 Aanrijden vanuit het Noorden

Situatie foto

Combining Knowledge and Experience

Randstad 380kV Noordring

Opdrachtgever	TenneT TSO B.V.
Project	Randstad 380 kV Noordring

Datum	8-apr-14
Projectnummer	R3N
Status	Definitief voor vergunningaanvraag
Opsteller	E. ten Cate / P. de Jager
Bijbehorende overzichtstekening	R3N-TEK-0003

Locatienummer I11

Soort weg	Ontsluitingsweg	**Naam weg**	Zuidweg
Wegbeheerder	Gemeente Kaag en Braassem		

Maatregelen Kruisingen

	Object	Methode	Tekeningnummer	Periode
1	Bestaande Inrit gebruiken			zie planning R3N-PLN-0001-03
2	K&L	Beschermen	R3N-TEK-0032	
3	Fietsers	Bebording	R3N-TEK-0034	
4				

Verkeersmaatregelen

1 In overleg met de wegbeheerder.
2
3
4

Situatie foto

Bijzonderheden

1 Bestaande inrit aanpassen
2 Aanpassing ook voor Blauwmolenweg tbv draaicircel vrachtwagens.
3 Aan en afrijden via Westzijde naar N445 en alleen de Oost
4 Op en Afrit gebruiken.

Combining Knowledge and Experience

bam COFELY FABRICOM GOF SVEZ

Randstad 380kV Noordring

Opdrachtgever	TenneT TSO B.V.
Project	Randstad 380 kV Noordring

Datum	8-apr-14
Projectnummer	R3N
Status	Definitief voor vergunningaanvraag
Opsteller	E. ten Cate / P. de Jager
Bijbehorende overzichtstekening	R3N-TEK-0003

Locatienummer I21

Soort weg	Ventweg	**Naam weg**	Blauwmolenweg
Wegbeheerder	Gemeente Kaag & Braassem		

Maatregelen Kruisingen

	Object	Methode	Tekeningnummer	Periode
1	geen	geen	geen	zie planning R3N-PLN-0001-03
2				
3				
4				

Verkeersmaatregelen

1 In overleg met de wegbeheerder.
2
3
4

Situatie foto

Bijzonderheden

1 Draaioppervlak Brug zuidweg vergroten aan Noordzijde icm I11
2 Aan en afrijden via Westzijde naar N445 .

3 Druk fietsverkeer

Combining Knowledge and Experience

Randstad 380kV Noordring

Opdrachtgever	TenneT TSO B.V.
Project	Randstad 380 kV Noordring

Datum	8-apr-14
Projectnummer	R3N
Status	Definitief voor vergunningaanvraag
Opsteller	E. ten Cate / P. de Jager
Bijbehorende overzichtstekening	R3N-TEK-0004

Locatienummer I31

Soort weg	Ventweg	**Naam weg**	Blauwmolenweg
Wegbeheerder	Gemeente Kaag & Braassem		

Maatregelen Kruisingen

	Object	Methode	Tekeningnummer	Periode
1	Sloot	Dam/duiker-nieuw	R3N-TEK-0033	zie planning R3N-PLN-0001-03
2	Geen K&L			
3				
4				

Verkeersmaatregelen

1 In overleg met de wegbeheerder.
2
3
4

Bijzonderheden

1 Wordt def toegangsweg tot OSP 5

2 Druk fietsverkeer

Situatie foto

Combining Knowledge and Experience

Randstad 380kV Noordring

Opdrachtgever	TenneT TSO B.V.
Project	Randstad 380 kV Noordring

Datum	8-apr-14
Projectnummer	R3N
Status	Definitief voor vergunningaanvraag
Opsteller	E. ten Cate / P. de Jager
Bijbehorende overzichtstekening	R3N-TEK-0004

Locatienummer J11

Soort weg	Ventweg	**Naam weg**	Blauwmolenweg
Wegbeheerder	Gemeente Kaag & Braassem		

Maatregelen Kruisingen

	Object	Methode	Tekeningnummer	Periode
1	Sloot	Dam/Duiker best	R3N-TEK-0033	zie planning R3N-PLN-0001-03
2	K&L	Beschermen	R3N-TEK-0032	
3				
4				

Verkeersmaatregelen

1 In overleg met de wegbeheerder.
2
3
4

Bijzonderheden

1 Bestaande K&L waarschijnlijk niet meer in gebruik (woning is gesloopt)

2 Druk fietsverkeer

Situatie foto

Combining Knowledge and Experience

Randstad 380kV Noordring

Opdrachtgever	TenneT TSO B.V.
Project	Randstad 380 kV Noordring

Datum	8-apr-14
Projectnummer	R3N
Status	Definitief voor vergunningaanvraag
Opsteller	E. ten Cate / P. de Jager
Bijbehorende overzichtstekening	R3N-TEK-0004

Locatienummer J21

Soort weg	Ventweg	**Naam weg**	Blauwmolenweg
Wegbeheerder	Gemeente Kaag & Braassem		

Maatregelen Kruisingen

	Object	Methode	Tekeningnummer	Periode
1	Sloot	Dam/duiker-aanp	R3N-TEK-0033	zie planning R3N-PLN-0001-03
2	K&L	Beschermen	R3N-TEK-0032	
3				
4				

Verkeersmaatregelen

1 In overleg met de wegbeheerder.
2
3
4

Bijzonderheden

1 Bestaande dam is waarschijnlijk breed genoeg

2 Druk fietsverkeer

Situatie foto

Combining Knowledge and Experience

Randstad 380kV Noordring

Opdrachtgever	TenneT TSO B.V.
Project	Randstad 380 kV Noordring

Datum	8-apr-14
Projectnummer	R3N
Status	Definitief voor vergunningaanvraag
Opsteller	E. ten Cate / P. de Jager
Bijbehorende overzichtstekening	R3N-TEK-0004

Locatienummer J31

Soort weg	Ventweg	**Naam weg**	Blauwmolenweg
Wegbeheerder	Gemeente Kaag & Braassem		

Maatregelen Kruisingen

	Object	Methode	Tekeningnummer	Periode
1	Sloot	Dam/duiker-nieuw	R3N-TEK-0033	zie planning R3N-PLN-0001-03
2	K&L	Beschermen	R3N-TEK-0032	
3				
4				

Verkeersmaatregelen

1 In overleg met de wegbeheerder.
2
3
4

Situatie foto

Bijzonderheden

1 In nabijheid van bestaande brug

2 K&L aan Oostzijde van de Blauwmolenweg

3 Druk fietsverkeer

Combining Knowledge and Experience

bam COFELY FABRICOM GDF SUEZ

Randstad 380kV Noordring

Opdrachtgever	TenneT TSO B.V.
Project	Randstad 380 kV Noordring

Datum	8-4-2014
Projectnummer	R3N
Status	Definitief voor vergunningaanvraag
Opsteller	E. ten Cate / P. de Jager
Bijbehorende overzichtstekening	R3N-TEK-0004

Locatienummer J221

Soort weg	Ventweg	**Naam weg**	Blauwmolenweg
Wegbeheerder	Gemeente Kaag & Braassem		

Maatregelen Kruisingen

	Object	Methode	Tekeningnummer	Periode
1	Sloot	bestaande dam/duiker		zie plannin zie planning R3N-PLN-0001-03
2	K&L	Beschermen	R3N-TEK-0032	
3				
4				

Verkeersmaatregelen

1 In overleg met de wegbeheerder.
2
3
4

Situatie foto

Bijzonderheden

1 In nabijheid van bestaande brug

2 K&L aan Oostzijde van de Blauwmolenweg

3 Druk fietsverkeer

Combining Knowledge and Experience

Randstad 380kV Noordring

Opdrachtgever	TenneT TSO B.V.
Project	Randstad 380 kV Noordring

Datum	8-apr-14
Projectnummer	R3N
Status	Definitief voor vergunningaanvraag
Opsteller	E. ten Cate / P. de Jager
Bijbehorende overzichtstekening	R3N-TEK-0005

Locatienummer J41

Soort weg	Ventweg	**Naam weg**	Blauwmolenweg
Wegbeheerder	Gemeente Kaag & Braassem		

7

Maatregelen Kruisingen

	Object	Methode	Tekeningnummer	Periode
1	Sloot	Dam/duiker-aanp	R3N-TEK-0033	zie planning R3N-PLN-0001-03
2	K&L	Beschermen	R3N-TEK-0032	
3				
4				

Verkeersmaatregelen

1 In overleg met de wegbeheerder.
2
3
4

Situatie foto

Bijzonderheden

1 Bestaande dam is waarschijnlijk breed genoeg

2 Druk fietsverkeer

Combining Knowledge and Experience

bam COFELY FABRICOM GDF SUEZ

Randstad 380kV Noordring

Opdrachtgever	TenneT TSO B.V.
Project	Randstad 380 kV Noordring

Datum	8-apr-14
Projectnummer	R3N
Status	Definitief voor vergunningaanvraag
Opsteller	E. ten Cate / P. de Jager
Bijbehorende overzichtstekening	R3N-TEK-0005

Locatienummer J61

Soort weg	Ventweg	**Naam weg**	Blauwmolenweg
Wegbeheerder	Gemeente Kaag & Braassem		

Maatregelen Kruisingen

	Object	Methode	Tekeningnummer	Periode
1	Sloot	Dam/duiker-aanp	R3N-TEK-0033	zie planning R3N-PLN-0001-03
2	K&L	Beschermen/omleggen	R3N-TEK-0032	
3				
4				

Verkeersmaatregelen

1 In overleg met de wegbeheerder.
2
3
4

Situatie foto

Bijzonderheden

1 Bestaande dam is breed genoeg

2 Duiker omleggen tbv nieuwbouw Fundatie 148

3 Weg versmallen tbv bouw mast fund Alleen doorgang voor fietsers en niet voor autoverkeer

Combining Knowledge and Experience

Randstad 380kV Noordring

Opdrachtgever	TenneT TSO B.V.
Project	Randstad 380 kV Noordring

Datum	8-apr-14
Projectnummer	R3N
Status	Definitief voor vergunningaanvraag
Opsteller	E. ten Cate / P. de Jager
Bijbehorende overzichtstekening	R3N-TEK-0005

Locatienummer J61

Soort weg	Ventweg	**Naam weg**	Zuidzijderweg
Wegbeheerder	Gemeente Kaag & Braassem		

Maatregelen Kruisingen

	Object	Methode	Tekeningnummer	Periode
1	Sloot	Dam/duiker-aanp	R3N-TEK-0033	zie planning R3N-PLN-0001-03
2				
3				
4				

Verkeersmaatregelen

1 In overleg met de wegbeheerder.
2
3
4

Bijzonderheden

1 Bestaande dam aanpassen

Situatie foto

Combining Knowledge and Experience

Randstad 380kV Noordring

Opdrachtgever	TenneT TSO B.V.
Project	Randstad 380 kV Noordring

Datum	8-apr-14
Projectnummer	R3N
Status	Definitief voor vergunningaanvraag
Opsteller	E. ten Cate / P. de Jager
Bijbehorende overzichtstekening	R3N-TEK-0005/0006 blad 001 en rev 7

Locatienummer J51/K231

Soort weg	Afrit snelweg A4 Afrit 6	**Naam weg**	Afrit 6 in A4
Wegbeheerder	Rijkswaterstaat		

Maatregelen Kruisingen

	Object	Methode	Tekeningnummer	Periode
1	K&L	Beschermen	R3N-TEK-0032	zie planning R3N-PLN-0001-03
2	Snelheid verlaging			
3				
4				

Verkeersmaatregelen

1 In overleg met de wegbeheerder.
2
3
4

Bijzonderheden

1 In bestaande afrit A4 naar tankstation

2 Tevens passage fietspad tbv T&R stat (korte periode , 4-8 wk) aan eind van de planning

Situatie foto

Combining Knowledge and Experience

Randstad 380kV Noordring

Opdrachtgever	TenneT TSO B.V.
Project	Randstad 380 kV Noordring

Datum	8-apr-14
Projectnummer	R3N
Status	Definitief voor vergunningaanvraag
Opsteller	E. ten Cate / P. de Jager
Bijbehorende overzichtstekening	R3N-TEK-0123

Locatienummer K 11

Soort weg	Ventweg	**Naam weg**	Zuidzijderweg
Wegbeheerder	Gemeente Leiderdorp/Prov Zuid-Holland		

Maatregelen Kruisingen

	Object	Methode	Tekeningnummer	Periode
1	Info niet beschikbaar ivm aanpassen situatie 2013/2014			zie planning R3N-PLN-0001-03
2				
3				
4				

Verkeersmaatregelen

1 In overleg met de wegbeheerder.
2
3
4

Situatie foto

Bijzonderheden

Tijdelijke en definitieve aansluiting op de Zuidzijderweg
Zuidzijderweg zal medio 2014 in nieuwe situatie gereed zijn

Combining Knowledge and Experience

Randstad 380kV Noordring

Opdrachtgever	TenneT TSO B.V.
Project	Randstad 380 kV Noordring

Datum	8-apr-14
Projectnummer	R3N
Status	Definitief voor vergunningaanvraag
Opsteller	E. ten Cate / P. de Jager
Bijbehorende overzichtstekening	R3N-TEK-0123

Locatienummer K 14

Soort weg	Ventweg	**Naam weg**	Hofdijklaan
Wegbeheerder	Gemeente Leiderdorp/Prov Zuid-Holland		

Maatregelen Kruisingen

	Object	Methode	Tekeningnummer	Periode
1	Bestaande dam gebruiken/aanpassen		R3N-TEK-0033	zie planning R3N-PLN-0001-03
2	Geen Info K&L>>>> Navragen		R3N-TEK-0032	
3				
4				

Verkeersmaatregelen

1 In overleg met de wegbeheerder.
2
3
4

Situatie foto

Bijzonderheden

1 Geen

Combining Knowledge and Experience

Randstad 380kV Noordring

Opdrachtgever	TenneT TSO B.V.
Project	Randstad 380 kV Noordring

Datum	8-apr-14
Projectnummer	R3N
Status	Definitief voor vergunningaanvraag
Opsteller	E. ten Cate / P. de Jager
Bijbehorende overzichtstekening	R3N-TEK-0123

Locatienummer K 16

Soort weg	Ventweg	**Naam weg**	Hofdijklaan
Wegbeheerder	Gemeente Leiderdorp/Prov Zuid-Holland		

Maatregelen Kruisingen

	Object	Methode	Tekeningnummer	Periode
1	Geen Info K&L>>>>	Navragen		zie planning R3N-PLN-0001-03
2				
3				
4				

Verkeersmaatregelen

1 In overleg met de wegbeheerder.
2
3
4

Bijzonderheden

1 Gebruik toerit eigenaar tbv plaatsen jukken

Situatie foto

Combining Knowledge and Experience

Randstad 380kV Noordring

Opdrachtgever	TenneT TSO B.V.
Project	Randstad 380 kV Noordring

Datum	8-apr-14
Projectnummer	R3N
Status	Definitief voor vergunningaanvraag
Opsteller	E. ten Cate / P. de Jager
Bijbehorende overzichtstekening	R3N-TEK-0006

Locatienummer K232

Soort weg	Afrit 6 snelweg A4 Afrit naar tank station	**Naam weg**	Afrit 6 in A4 naar Tankstation westzijde
Wegbeheerder	Rijkswaterstaat		

Maatregelen Kruisingen

	Object	Methode	Tekeningnummer	Periode
1	K&L	Beschermen	R3N-TEK-0032	zie planning R3N-PLN-0001-03
2	Snelheid verlaging			
3				
4				

Verkeersmaatregelen

1 In overleg met de wegbeheerder.
2
3
4

Situatie foto

Bijzonderheden

1 In bestaande afrit A4 naar tankstation Westzijde A4

2 Vangrail zuidzijde verwijderen

Combining Knowledge and Experience

Randstad 380kV Noordring

Opdrachtgever	TenneT TSO B.V.
Project	Randstad 380 kV Noordring

Datum	8-apr-14
Projectnummer	R3N
Status	Definitief voor vergunningaanvraag
Opsteller	E. ten Cate / P. de Jager
Bijbehorende overzichtstekening	R3N-TEK-0006

Locatienummer K23

Soort weg	Afrit snelweg A4 Afrit 6	**Naam weg**	Oprit 6 naar A4 richting Adam
Wegbeheerder	Rijkswaterstaat		

Maatregelen Kruisingen

	Object	Methode	Tekeningnummer	Periode
1	Snelheid verlaging vekeer naar A4			zie planning R3N-PLN-0001-03
2				
3				
4				

Verkeersmaatregelen

1 In overleg met de wegbeheerder.
2
3
4

Bijzonderheden

1

Situatie foto

Combining Knowledge and Experience

bam COFELY FABRICOM GDF SUEZ

Randstad 380kV Noordring

Opdrachtgever	TenneT TSO B.V.
Project	Randstad 380 kV Noordring

Datum	8-apr-14
Projectnummer	R3N
Status	Definitief voor vergunningaanvraag
Opsteller	E. ten Cate / P. de Jager
Bijbehorende overzichtstekening	R3N-TEK-0006

Locatienummer K235

Soort weg	Ventweg Toegang Infocentrum A4	**Naam weg**	Bospolder
Wegbeheerder	Rijkswaterstaat		

Maatregelen Kruisingen

	Object	Methode	Tekeningnummer	Periode
1	K&L	Beschermen	R3N-TEK-0032	zie planning R3N-PLN-0001-03
2				
3				
4				

Verkeersmaatregelen

1 In overleg met de wegbeheerder.
2
3
4

Bijzonderheden

1 Geen

Situatie foto

Combining Knowledge and Experience

Randstad 380kV Noordring

Opdrachtgever	TenneT TSO B.V.
Project	Randstad 380 kV Noordring

Datum	8-apr-14
Projectnummer	R3N
Status	Definitief voor vergunningaanvraag
Opsteller	E. ten Cate / P. de Jager
Bijbehorende overzichtstekening	R3N-TEK-0006

Locatienummer K 21

Soort weg	Oprit A4	**Naam weg**	A4 Oprit 6/A4
Wegbeheerder	Rijkswaterstaat		

Maatregelen Kruisingen

	Object	Methode	Tekeningnummer	Periode
1	Geen	Bestaande Inrit gebruiken		zie planning R3N-PLN-0001-03
2				
3				
4				

Verkeersmaatregelen

1 In overleg met de wegbeheerder.
2
3
4

Situatie foto

Bijzonderheden

1 Afrit tbv HSL gebruiken

Combining Knowledge and Experience

bam COFELY FABRICOM GDF SUEZ

Randstad 380kV Noordring

Opdrachtgever	TenneT TSO B.V.
Project	Randstad 380 kV Noordring

Datum	8-apr-14
Projectnummer	R3N
Status	Definitief voor vergunningaanvraag
Opsteller	E. ten Cate / P. de Jager
Bijbehorende overzichtstekening	R3N-TEK-0006

Locatienummer K 31

Soort weg	Provinciale weg N445	**Naam weg**	Doespolderkade/Ruigekade
Wegbeheerder	Provincie Zuid-Holland		

Maatregelen Kruisingen

	Object	Methode	Tekeningnummer	Periode
1	Sloot	Dam/duiker-aanp	R3N-TEK-0033	zie planning R3N-PLN-0001-03
2	K&L	Beschermen	R3N-TEK-0032	
3				
4				

Verkeersmaatregelen

1 In overleg met de wegbeheerder.
2
3
4

Bijzonderheden

1 Snelheidsverlaging op N446
2 Hoogteverschil overwinnen
3 Kappen bomen/struiken
4 Goede voorlichting aan project leverancier (geen overstekend verkeer)
5 Goede bebording

Situatie foto

Combining Knowledge and Experience

Randstad 380kV Noordring

Opdrachtgever	TenneT TSO B.V.
Project	Randstad 380 kV Noordring

Datum	8-apr-14
Projectnummer	R3N
Status	Definitief voor vergunningaanvraag
Opsteller	E. ten Cate / P. de Jager
Bijbehorende overzichtstekening	R3N-TEK-0008

Locatienummer K 70

Soort weg Ontsluitingsweg **Naam weg** Hondsdijk

Wegbeheerder Gemeente Rijnwoude/Provincie ZH

Maatregelen Kruisingen

	Object	Methode	Tekeningnummer	Periode
1	Sloot	Dam/duiker-aanp	R3N-TEK-0033	zie planning R3N-PLN-0001-03
2	K&L	Beschermen	R3N-TEK-0032	
3				
4				

Verkeersmaatregelen

1 In overleg met de wegbeheerder.
2
3
4

Bijzonderheden

1 Kleine aanpassingen in bestaande Dam

Situatie foto

Combining Knowledge and Experience

Randstad 380kV Noordring

Opdrachtgever	TenneT TSO B.V.
Project	Randstad 380 kV Noordring

Datum	8-apr-14
Projectnummer	R3N
Status	Definitief voor vergunningaanvraag
Opsteller	E. ten Cate / P. de Jager
Bijbehorende overzichtstekening	R3N-TEK-0008

Locatienummer K 71

Soort weg	Ontsluitingsweg	**Naam weg**	Hondsdijk
Wegbeheerder	Gemeente Rijnwoude/Provincie ZH		

Maatregelen Kruisingen

	Object	Methode	Tekeningnummer	Periode
1	Sloot	Dam/duiker-aanp	R3N-TEK-0033	zie planning R3N-PLN-0001-03
2	K&L	Beschermen	R3N-TEK-0032	
3				
4				

Verkeersmaatregelen

1 In overleg met de wegbeheerder.
2
3
4

Bijzonderheden

1 Kleine aanpassingen in bestaande Dam

Situatie foto

Combining Knowledge and Experience

Randstad 380kV Noordring

Opdrachtgever	Tennet TSO B.V.
Project	Randstad 380 kV Noordring

Datum	8-apr-14
Projectnummer	R3N
Status	Definitief voor vergunningaanvraag
Opsteller	E. ten Cate / P. de Jager
Bijbehorende overzichtstekening	R3N-TEK-0008

Locatienummer L11

Soort weg	Ontsluitingsweg	**Naam weg**	Rijndijk
Wegbeheerder	Gemeente Rijnwoude/Provincie ZH		

Maatregelen Kruisingen

	Object	Methode	Tekeningnummer	Periode
1	K&L	Beschermen	R3N-TEK-0032	zie planning R3N-PLN-0001-03
2	Fietsers		R3N-TEK-0034	
3	Bestaande dam gebruiken		R3N-TEK-0033	
4				

Verkeersmaatregelen

1 In overleg met de wegbeheerder.
2
3
4

Bijzonderheden

1 Evt aanpassing middendruppel Rijndijk

2 Aanpassen berm Rijndijk/Fietspad.

Situatie foto

Opdrachtgever	TenneT TSO B.V.
Project	Randstad 380 kV Noordring

Datum	8-apr-14
Projectnummer	R3N
Status	Definitief voor vergunningaanvraag
Opsteller	E. ten Cate / P. de Jager
Bijbehorende overzichtstekening	R3N-TEK-0008

Locatienummer L13

Soort weg	Op/Afrit N11	**Naam weg**	Op/Afrit N11 Hazerswoude
Wegbeheerder	RWS		

Maatregelen Kruisingen

	Object	Methode	Tekeningnummer	Periode
1	Geen	Bestaande Inrit gebruiken		zie planning R3N-PLN-0001-03
2				
3				
4				

Verkeersmaatregelen

1 In overleg met de wegbeheerder.
2
3
4

Bijzonderheden

1 Belijning oprit aanpassen

Situatie foto

Combining Knowledge and Experience

Randstad 380kV Noordring

Opdrachtgever	TenneT TSO B.V.
Project	Randstad 380 kV Noordring
Datum	8-apr-14
Projectnummer	R3N
Status	Definitief voor vergunningaanvraag
Opsteller	E. ten Cate / P. de Jager
Bijbehorende overzichtstekening	R3N-TEK-0009

Locatienummer L21

Soort weg	Polderweg	**Naam weg**	Vierheemskinderweg
Wegbeheerder	Rijnwoude/Zuid-Holland.		

Maatregelen Kruisingen

	Object		Methode	Tekeningnummer	Periode
1	sloot	L21	Dam/duiker-nieuw	R3N-TEK-0033	zie planning R3N-PLN-0001-03
2	K&L	L21	Beschermen	R3N-TEK-0032	
3					
4					

Verkeersmaatregelen

1 In overleg met de wegbeheerder.
2
3
4

Situatie foto

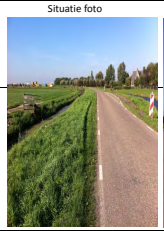

Bijzonderheden

1 Bermen verbreden ivm draaicircel

Combining Knowledge and Experience

bam COFELY FABRICOM GDF SUEZ

Randstad 380kV Noordring

Opdrachtgever	TenneT TSO B.V.
Project	Randstad 380 kV Noordring

Datum	8-apr-14
Projectnummer	R3N
Status	Definitief voor vergunningaanvraag
Opsteller	E. ten Cate / P. de Jager
Bijbehorende overzichtstekening	R3N-TEK-0009

Locatienummer L31

Soort weg	Polderweg	**Naam weg**	Vierheemskinderweg
Wegbeheerder	Rijnwoude/Zuid-Holland.		

Maatregelen Kruisingen

	Object		Methode	Tekeningnummer	Periode
1	sloot	L31	Dam/duiker-nieuw	R3N-TEK-0033	zie planning R3N-PLN-0001-03
2	K&L	L31	Beschermen	R3N-TEK-0032	
3					
4					

Verkeersmaatregelen

1 In overleg met de wegbeheerder.
2
3
4

Bijzonderheden

1 Bermen verbreden ivm draaicircel

Situatie foto

Combining Knowledge and Experience

Randstad 380kV Noordring

Opdrachtgever	TenneT TSO B.V.
Project	Randstad 380 kV Noordring

Datum	8-apr-14
Projectnummer	R3N
Status	Definitief voor vergunningaanvraag
Opsteller	E. ten Cate / P. de Jager
Bijbehorende overzichtstekening	R3N-TEK-0010

Locatienummer L41 en L61

Soort weg	Ontsluitingsweg	**Naam weg**	Westeinde
Wegbeheerder	Rijnwoude/Zuid-Holland.		

Maatregelen Kruisingen

	Object		Methode	Tekeningnummer	Periode
1	Sloot	L61	Dam/Duiker-aanp	R3N-TEK-0034	zie planning R3N-PLN-0001-03
2	Fietspad	L61		R3N-TEK-0034	
3	K&L	L61		R3N-TEK-0032	
4	K&L	L41		R3N-TEK-0032	

Verkeersmaatregelen

1 In overleg met de wegbeheerder.
2
3
4

Situatie foto

Bijzonderheden

1 Bestaande inrit L41 aanpassen
2 Bestaande dam L61 wordt inrit voor definitieve toegangsweg OSP afst 123
3 Vrachtverkeer niet door woonkern Hazerswoude Dorp
4 Verkeerssituatie aanpassen iom bevoegd gezag
5 Inrit nr 9 bouwverkeer en bewoners scheiden

Combining Knowledge and Experience

Randstad 380kV Noordring

Opdrachtgever	TenneT TSO B.V.
Project	Randstad 380 kV Noordring

Datum	8-apr-14
Projectnummer	R3N
Status	Definitief voor vergunningaanvraag
Opsteller	E. ten Cate / P. de Jager
Bijbehorende overzichtstekening	R3N-TEK-0011

Locatienummer M51

Soort weg	Provinciale weg N209	**Naam weg**	N209(Hoogeveenseweg)
Wegbeheerder	Zuid-Holland		

Maatregelen Kruisingen

	Object	Methode	Tekeningnummer	Periode
1	Sloot	dam/duiker-nieuw	R3N-TEK-0034	zie planning R3N-PLN-0001-03
2	Fietspad		R3N-TEK-0034	
3	K&L	Beschermen	R3N-TEK-0032	
4	Bomen in berm verwijderen			

Verkeersmaatregelen

1 In overleg met de wegbeheerder.
2
3
4

Situatie foto

Bijzonderheden

1 Te verwijderen boom

Combining Knowledge and Experience

Randstad 380kV Noordring

Opdrachtgever	TenneT TSO B.V.
Project	Randstad 380 kV Noordring

Datum	8-apr-14
Projectnummer	R3N
Status	Definitief voor vergunningaanvraag
Opsteller	E. ten Cate / P. de Jager
Bijbehorende overzichtstekening	R3N-TEK-0011

Locatienummer M151

Soort weg	Provincialeweg N 209	**Naam weg**	N209(Hoogeveenseweg)
Wegbeheerder	Zuid-Holland		

Maatregelen Kruisingen

	Object	Methode	Tekeningnummer	Periode
1	sloot	Dam/duiker-nieuw	R3N-TEK-0033	zie planning R3N-PLN-0001-03
2	Verwijderen bomen berm			
3	Verwijderen meubilair bushalte.			
4				

Verkeersmaatregelen

1 In overleg met de wegbeheerder.
2
3
4

Bijzonderheden

1 Te verwijderen bomen en meubilair

Situatie foto

Combining Knowledge and Experience

Randstad 380kV Noordring

Opdrachtgever	TenneT TSO B.V.
Project	Randstad 380 kV Noordring

Datum	8-apr-14
Projectnummer	R3N
Status	Definitief voor vergunningaanvraag
Opsteller	E. ten Cate / P. de Jager
Bijbehorende overzichtstekening	R3N-TEK-0011

Locatienummer M31

Soort weg	Provinciale weg N209	**Naam weg**	N209(Hoogeveenseweg)
Wegbeheerder	Zuid-Holland		

Maatregelen Kruisingen

	Object	Methode	Tekeningnummer	Periode
1	Geen	Bestaande Inrit gebruiken		zie planning R3N-PLN-0001-03
2				
3				
4				

Verkeersmaatregelen

1 In overleg met de wegbeheerder.
2
3
4

Bijzonderheden

1 Bestaande M31 Inrit voldoet

2 Tevens ontsluiting Golfterrein

3 Evt verbreden tpv bermen
met Rijplaten

Situatie foto

Combining Knowledge and Experience

Randstad 380kV Noordring

Opdrachtgever	TenneT TSO B.V.
Project	Randstad 380 kV Noordring

Datum	8-apr-14
Projectnummer	R3N
Status	Definitief voor vergunningaanvraag
Opsteller	E. ten Cate / P. de Jager
Bijbehorende overzichtstekening	R3N-TEK-0016

Locatienummer M41

Soort weg	Provinciale weg N209	**Naam weg**	N209(Hoogeveenseweg)
Wegbeheerder	Zuid-Holland		

Maatregelen Kruisingen

	Object	Methode	Tekeningnummer	Periode
1	Sloot	Dam/duiker-aanp	R3N-TEK-0033	zie planning R3N-PLN-0001-03
2	K&L	Beschermen	R3N-TEK-0032	
3				
4				

Verkeersmaatregelen

1 In overleg met de wegbeheerder.
2
3
4

Situatie foto

Bijzonderheden

1 Bermen verbreden met rijplaten
2 Te verwijderen boom
3 Plannen zijn dat hier de nieuwe inrit komt voor de Golfbaan
Evt situatie aanpassen aan de toekomstige situatie

Combining Knowledge and Experience

bam COFELY FABRICOM GDF SUEZ

Randstad 380kV Noordring

Opdrachtgever	TenneT TSO B.V.
Project	Randstad 380 kV Noordring

Datum	8-apr-14
Projectnummer	R3N
Status	Definitief voor vergunningaanvraag
Opsteller	E. ten Cate / P. de Jager
Bijbehorende overzichtstekening	R3N-TEK-0012

Locatienummer M34

Soort weg	Provinciale weg N209	**Naam weg**	N209(Nieuwe Hoefweg)
Wegbeheerder	Zuid-Holland		

Maatregelen Kruisingen

	Object	Methode	Tekeningnummer	Periode
1	Sloot	dam/duiker-aanp	R3N-TEK-0033	zie planning R3N-PLN-0001-03
2	K&L	Beschermen	R3N-TEK-0032	
3				
4				

Verkeersmaatregelen

1 In overleg met de wegbeheerder.
2
3
4

Bijzonderheden

1 Is momenteel ook in/uitrit Bouwverkeer tbv project Gasunie

Situatie foto

Combining Knowledge and Experience

Randstad 380kV Noordring

Opdrachtgever	TenneT TSO B.V.
Project	Randstad 380 kV Noordring

Datum	8-apr-14
Projectnummer	R3N
Status	Definitief voor vergunningaanvraag
Opsteller	E. ten Cate / P. de Jager
Bijbehorende overzichtstekening	R3N-TEK-0013

Locatienummer M61

Soort weg	Provinciale weg N209	**Naam weg**	N209(Nieuwe Hoefweg)
Wegbeheerder	Zuid-Holland		

Maatregelen Kruisingen

	Object	Methode	Tekeningnummer	Periode
1	Sloot	dam/duiker-aanp	R3N-TEK-0033	zie planning R3N-PLN-0001-03
2	K&L	Beschermen	R3N-TEK-0032	
3				
4				

Verkeersmaatregelen

1 In overleg met de wegbeheerder.
2
3
4

Bijzonderheden

1 Bestaande Inrit aanpassen mbv rijplaten.

Situatie foto

Combining Knowledge and Experience

Randstad 380kV Noordring

Opdrachtgever	TenneT TSO B.V.
Project	Randstad 380 kV Noordring

Datum	8-apr-14
Projectnummer	R3N
Status	Definitief voor vergunningaanvraag
Opsteller	E. ten Cate / P. de Jager
Bijbehorende overzichtstekening	R3N-TEK-0099

Locatienummer M71

Soort weg	Provinciale weg N209	**Naam weg**	N209(Nieuwe Hoefweg)
Wegbeheerder	Zuid-Holland		

Maatregelen Kruisingen

	Object	Methode	Tekeningnummer	Periode
1	sloot	Dam-duiker best	R3N-TEK-0033	zie planning R3N-PLN-0001-03
2				
3				
4				

Verkeersmaatregelen

1 In overleg met de wegbeheerder.
2
3
4

Situatie foto

Bijzonderheden

Deze toegang zal alleen gebruikt worden tbv de definitieve toegangsweg
In overleg alleen personen autos en busjes, maar Absoluut geen vrachtverkeer.
Vrachtverkeer volgt inrit nr M61

Combining Knowledge and Experience

Randstad 380kV Noordring

Opdrachtgever	TenneT TSO B.V.
Project	Randstad 380 kV Noordring

Datum	8-apr-14
Projectnummer	R3N
Status	Definitief voor vergunningaanvraag
Opsteller	E. ten Cate / P. de Jager
Bijbehorende overzichtstekening	R3N-TEK-0017

Locatienummer M81

Soort weg	Ontsluitingsweg	**Naam weg**	Herenweg
Wegbeheerder	Gemeente Zuidplas		

Maatregelen Kruisingen

	Object	Methode	Tekeningnummer	Periode
1	sloot	Dam/duiker-bestaand	R3N-TEK-0033	zie planning R3N-PLN-0001-03
2				
3				
4				

Verkeersmaatregelen

1 In overleg met de wegbeheerder.
2
3
4

Situatie foto

Bijzonderheden

1 Bestaande dam verbreden
2 In nu ook als in en uitrit in gebruik voor de Gasunie

Combining Knowledge and Experience

Randstad 380kV Noordring

Opdrachtgever	TenneT TSO B.V.
Project	Randstad 380 kV Noordring

Datum	8-apr-14
Projectnummer	R3N
Status	Definitief voor vergunningaanvraag
Opsteller	E. ten Cate / P. de Jager
Bijbehorende overzichtstekening	R3N-TEK-0017

Locatienummer M91

Soort weg	Polderweg	**Naam weg**	Rottedijk
Wegbeheerder	Gemeente Zuidplas		

Maatregelen Kruisingen

	Object	Methode	Tekeningnummer	Periode
1	Sloot	Dam/duiker-bestaand		zie planning R3N-PLN-0001-03
2				
3				
4				

Verkeersmaatregelen

1 In overleg met de wegbeheerder.
2
3
4

Bijzonderheden

1 Bestaande dam vol leggen met rijplaten
2 Inrit Rottedijk/Herenweg verbreden met rijplaten.

Situatie foto

Combining Knowledge and Experience

Randstad 380kV Noordring

Opdrachtgever	TenneT TSO B.V.
Project	Randstad 380 kV Noordring

Datum	8-apr-14
Projectnummer	R3N
Status	Definitief voor vergunningaanvraag
Opsteller	E. ten Cate / P. de Jager
Bijbehorende overzichtstekening	R3N-TEK-0018

Locatienummer M101

Soort weg	Polderweg	**Naam weg**	Herenweg
Wegbeheerder	Gemeente Zuidplas		

Maatregelen Kruisingen

	Object	Methode	Tekeningnummer	Periode
1	geen	bestaande inrit gebruiken		zie planning R3N-PLN-0001-03
2				
3				
4				

Verkeersmaatregelen

1 In overleg met de wegbeheerder.
2
3
4

Situatie foto

Bijzonderheden

1 Geen dempingen.
2 Lokaal verbreden met rijplaten
3 Inrit aanpassen met rijplaten

Combining Knowledge and Experience

Randstad 380kV Noordring

Opdrachtgever	TenneT TSO B.V.
Project	Randstad 380 kV Noordring

Datum	8-apr-14
Projectnummer	R3N
Status	Definitief voor vergunningaanvraag
Opsteller	E. ten Cate / P. de Jager
Bijbehorende overzichtstekening	R3N-TEK-0018

Locatienummer M121

Soort weg	Eigenweg/Polderweg	**Naam weg**	Noorddijk
Wegbeheerder	Gemeente Zuidplas		

Maatregelen Kruisingen

	Object	Methode	Tekeningnummer	Periode
1	Geen	bestaande inrit gebruiken		zie planning R3N-PLN-0001-03
2				
3				
4				

Verkeersmaatregelen

1 In overleg met de wegbeheerder.
2
3
4

Bijzonderheden

1 Toegangsweg onderstation (niet bekeken)
2 rijplaten in bermen ter bescherming

Situatie foto

Combining Knowledge and Experience

Randstad 380kV Noordring

Opdrachtgever	Tennet TSO B.V.
Project	Randstad 380 kV Noordring

Datum	8-apr-14
Projectnummer	R3N
Status	Definitief voor vergunningaanvraag
Opsteller	E. ten Cate / P. de Jager
Bijbehorende overzichtstekening	R3N-TEK-0099

Locatienummer N11

Soort weg Onsluitingsweg **Naam weg** Dwarslaan

Wegbeheerder Lansingerland/Zuid-Holland

Maatregelen Kruisingen

	Object	Methode	Tekeningnummer	Periode
1	Sloot	dam/duiker-nieuw	R3N-TEK-0034	zie planning R3N-PLN-0001-03
2	K&L	Beschermen	R3N-TEK-0032	
3	Fietspad		R3N-TEK-0034	
4				

Verkeersmaatregelen

1 In overleg met de wegbeheerder.
2
3
4

Situatie foto

Bijzonderheden

1
2
3

Combining Knowledge and Experience

Randstad 380kV Noordring

Opdrachtgever	Tennet TSO B.V.
Project	Randstad 380 kV Noordring

Datum	8-apr-14
Projectnummer	R3N
Status	Definitief voor vergunningaanvraag
Opsteller	E. ten Cate / P. de Jager
Bijbehorende overzichtstekening	R3N-TEK-0014

Locatienummer N21

Soort weg Onsluitingsweg **Naam weg** Kruisweg

Wegbeheerder Eigen weg /Lansingerland/Zuid-Holland

Maatregelen Kruisingen

	Object	Methode	Tekeningnummer	Periode
1	Sloot	Brug-bestaand		zie planning R3N-PLN-0001-03
2				
3				
4				

Verkeersmaatregelen

1 In overleg met de wegbeheerder.
2
3
4

Bijzonderheden

1 Bestaande brug gebruiken
2 Bomen in tuin to inrit verwijderen
3 Lichtmast TO inrit verplaatsen

Situatie foto

Combining Knowledge and Experience

Randstad 380kV Noordring

Opdrachtgever	TenneT TSO B.V.
Project	Randstad 380 kV Noordring

Datum	8-apr-14
Projectnummer	R3N
Status	Definitief voor vergunningaanvraag
Opsteller	E. ten Cate / P. de Jager
Bijbehorende overzichtstekening	R3N-TEK-0015

Locatienummer N31

Soort weg Onsluitingsweg **Naam weg** Facetlaan

Wegbeheerder Lansingerland/Zuid-Holland

Maatregelen Kruisingen

	Object	Methode	Tekeningnummer	Periode
1	Sloot	Dam/duiker-nieuw	R3N-TEK-0033	zie planning R3N-PLN-0001-03
2	Fietspad	Omleggen	R3N-TEK-0034	
3				
4				

Verkeersmaatregelen

1 In overleg met de wegbeheerder.
2
3
4

Bijzonderheden

1 Fietspad omleggen buiten bouwterrein
2 Plan verkeerscirculatie bouw fund 104 na overleg steakholders

Situatie foto

Combining Knowledge and Experience

Randstad 380kV Noordring

Opdrachtgever	TenneT TSO B.V.
Project	Randstad 380 kV Noordring

Datum	8-4-2014
Projectnummer	R3N
Status	Definitief voor vergunningaanvraag
Opsteller	E. ten Cate / P. de Jager
Bijbehorende overzichtstekening	R3N-TEK-0015

Locatienummer N296

Soort weg Onsluitingsweg **Naam weg** Facetlaan

Wegbeheerder Lansingerland/Zuid-Holland

Maatregelen Kruisingen

	Object	Methode	Tekeningnummer	Periode
1	Sloot	Bestaande inrit tbv overstort		zie plannin zie planning R3N-PLN-0001-03
2				
3				
4				

Verkeersmaatregelen

1 In overleg met de wegbeheerder.
2
3
4

Bijzonderheden

1
2

Situatie foto

Combining Knowledge and Experience

Randstad 380kV Noordring

Opdrachtgever	TenneT TSO B.V.
Project	Randstad 380 kV Noordring

Datum	8-apr-14
Projectnummer	R3N
Status	Definitief voor vergunningaanvraag
Opsteller	E. ten Cate / P. de Jager
Bijbehorende overzichtstekening	R3N-TEK-0015

Locatienummer N41

Soort weg	Onsluitingsweg Station Bleiswijk	**Naam weg**	Laan van Mathenesse
Wegbeheerder	Lansingerland/Zuid-Holland		

Maatregelen Kruisingen

	Object	Methode	Tekeningnummer	Periode
1	Geen			zie planning R3N-PLN-0001-03
2				
3				
4				

Verkeersmaatregelen

1 In overleg met de wegbeheerder.
2
3
4

Bijzonderheden

1
2
3

Situatie foto